规 格 书

Aluminum Electrolytic Capacitors

Specification For Approval

客户：	日期：2022.6.23
Customer :	Date:

品名	Item	:	Stacked solid polymer aluminum electrolytic capacitor
型号	Series	:	MPD19
版本	Version	:	00
物料号	Customer P/N	:	MPD331M0ED19006R

客户 Customer		
批准 Approved by	研发部 R&D	品保部 QC

供应商 Supplier		
批准 Approved by	审核 Checked by	拟制 Prepared by
瞿杰洁	张欢	皮翠萍

承认书请寄回一份

Please Return One Copy with Your Approval

上海永铭电子股份有限公司

Shanghai Yongming Electronic Co., Ltd.

Tel: 021-33617848 Fax: 021-33617128

Http://www.sh-ymin.com

客户名 Customer		系列 SERIES	MPD19

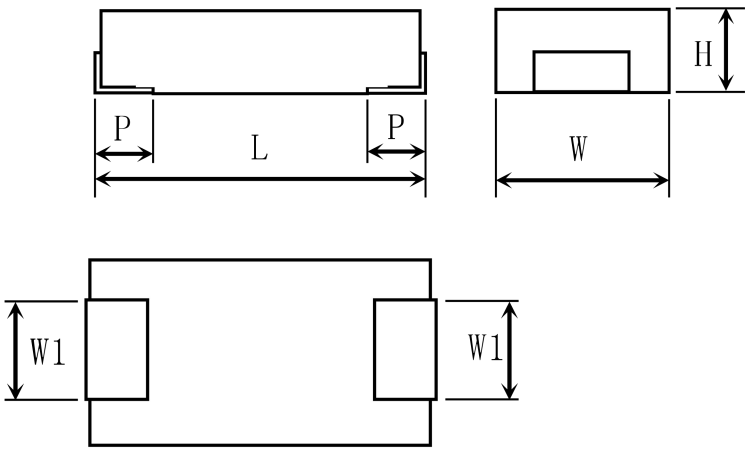

编号 Case Code	L	W	H	W1	P
D19	7.3±0.3	4.3±0.2	1.9±0.1	2.4±0.2	1.3±0.2

FIG-1

TABLE-1

No	客户物料编码 Customer Part No	永铭物料编码 Ymin Part No	额定电压 Rated Voltage (V.DC)	容量 Capacitance (μF)	浪涌电压 Surge Voltage (V.DC)	使用温度范围 Operating Temp.Range (℃)	容量范围 Capacitance Tolerance (%)	损耗 Tanδ (120Hz) (Max) (%)	阻抗 Impedance (mΩ) Max at 25±2℃ 100KHz	最大纹波电流 Max Ripple Current(mA) at 45℃100KHz	漏电流 Leakage Current (μA)(2mins reading)	寿命 Life At 105℃ (Hours)	尺寸 Dimensions(mm)					外观 Appearance Drawing No.
													L	W	H	W1	P	
1		MPD331M0ED19006R	2.5	330	3.15	-55~105	±20	6	6	7500	83	2000	7.3	4.3	1.9	2.4	1.3	
2																		
3																		
4																		
5																		
6																		

1 概述 SCOPE

本承认书规定了叠层高分子固态铝电解电容器的技术规范。

This recognition specifies the technical specifications for Stacked polymer solid aluminum electrolytic capacitor.

2 参考标准 APPLICABLE SPECIFICATION

本承认书参考 JIS C5101-25 和 JIS C-5102 制定。

This approval sheet consulted the institute of JIS C5101-25 and JISC-5102。

3 工作温度范围 OPERATING TEMPERATURE RANGE

工作温度范围是电容器在施加额定工作电压和额定纹波电流的条件下，可以长期可靠工作的环境温度范围。

-55~+105 ℃（2~50V.DC）

Operating temperature range is the range of ambient temperature at which the capacitors can be operated continuously at rated voltage.

-55~+105℃（2~50V.DC）

4 测试环境 CHARACTERISTICS

如果没有其他规定，标准的测试、检验环境条件如下所示：

环境温度：15~35℃

相对湿度：60~70%

大气压力：86kpa~106kpa

如果对测试结果有异议，可以在以下条件测试：

环境温度：20℃±1℃

相对湿度：60%~70%

大气压力：86kpa~106kpa

Unless otherwise specified, the standard range of atmospheric conditions for making measurements and tests are as follows.

Ambient temperature ：15 to 35℃

Relative humidity ： 60 to70%

Air pressure ：86kpa to 106kpa

If there may be doubt on the results, measurements shall be made within the following limits

Ambient temperature ：20±1 ℃

Relative humidity：60% to 67%

Air pressure ：86kpa to 106kpa

5 产品特性 PRODUCT CHARACTERISTICS

5.1 电气特性 ELECTRICAL CHARACTERISTICS

序号 NO	项目 **Item**	测试方法 **Test method**	性能 **Performance**
5.1.1	电容量 Capacitance	测试频率：120Hz±20% 测试电路：串联等效电路 测试电压：0.5Vrms Measuring frequency: 120Hz±20% Measuring circuit: Series equivalent circuit Measuring voltage: 0.5Vms	见表 1 see table 1
5.1.2	损失角正切值 Dissipation Factor	测试条件与 5.1.1 电容量测试相同 Testing condition are the same as 5.1.1 for capacitance	见表 1 see table 1
5.1.3	漏电流 Leakage current	在电容器两端施加额定工作电压，并串联 1000±100Ω电阻，在施加电压 2 分钟后，测量漏电流。 测试电路如下图： The rated voltage shall be applied across the capacitors and its protective resistor which shall be 1000±100Ω. The leakage current shall then be measured after an electrification period of 2 min. Measurement circuit 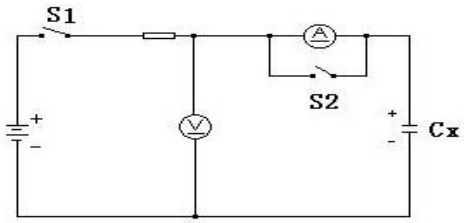 Rs: 保护电阻（1000±100Ω）Protective resistor (1000±100Ω) Ⓥ: 直流电压表 DC voltage meter Ⓐ :直流电流表 DC AM meter S_1: 开关 Switch S_2: 电流表保护开关 Protective switch for an ammeter	施加额定工作电压 2 分钟后 The leakage current shall then be measured after an electrification period of 2 min. 2～50 V.DC LC≤0.1CV LC：漏电流(μA） C：容量(μF） V：额定工作电压(V) LC: Leakage current(μA） C:Capacitance(μF） V: Rated voltage(V)
5.1.4	等效串联电阻 ESR	测试频率：100KHz±10% 测试电路：串联等效电路 测试电压：0.5Vrms Measuring frequency: 100KHz±10% Measuring circuit: Series equivalent circuit Measuring voltage: 0.5Vrms	见表 1 see table 1

5.1.5	温度特性 Temperature Characteristic	阶段 温度 时间 1 20±2℃ -- 2 -40$^{+0}_{-3}$℃ 2h 3 20±2℃ 15min. 4 105$^{+3}_{-0}$℃ 2h 阶段 1：测量容量和 ESR 阶段 2：电容器恒温贮存 2 小时，在热平衡状态测容量和 ESR 阶段 4：电容器恒温贮存 2 小时，在热平衡状态测电容量 Step 1: Capacitance and ESR shall be measured. Step 2: After the capacitors being stored for 2 hours, Capacitance and ESR shall be made at thermal stability. Step 4: After the capacitors being stored for 2 hours at 105℃, capacitance shall be measured. The measurement shall be made at thermal stability.	阶段 2： 容量变化应在阶段 1 的±15%范围内。 ESR 在初始值的 115%以内。 阶段 4： 容量变化应在阶段 1 的±20%范围内 Step 2: capacitance Within ±15% of the value at Step 1. ESR value Within 115% times of initial value Step4: Variation of capacitance Within ±20% of the value at Step 1.
5.1.6	耐浪涌电压 Surge Test	充电 30±5 秒，放电 5.5±0.5 分钟作为一个周期，共进行 1000 次。 测试温度：15℃-35℃ 然后在标准大气条件下放置达到热稳定，测试各参数 1000 times of charging for 30±5 sec., with a period of 5.5±0.5 min. Test temperature: 15℃-35℃ And the capacitors shall be stored under standard atmospheric conditions to obtain thermal stability, after which measurements shall be made. 测试回路 Test circuit 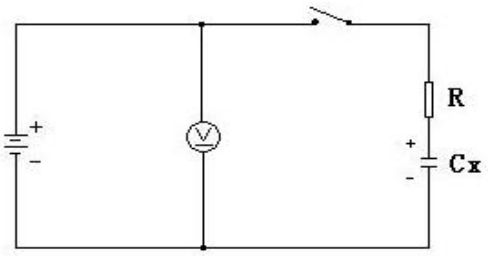 instantaneous over voltage which may be applied to terminals of capacitors, therefore, not applicable to such over voltages as often applied. 浪涌电压设定 RV(V) 2 2.5 4 6.3 10 16 S.V(V) 2.5 3.12 4.6 7.3 11.5 18.4 RV(V) 20 25 35 50 S.V(V) 23 29 40.25 57.5	容量：在初始值的±20%以内。 损耗角正切值：不大于规定值的 200%。 漏电流：不大于规定值。 Capacitance: Within ±20% of the initial value Dissipation factor: Not more 200% of the specified value Leakage current: No more than the specified value

5.2 机械特性 MECHANICAL PERFORMANCE

序号 NO	项目 Item	测试方法 Test method	特性 Performance
5.2.2	振动试验 Resistance to Vibration	依据 JIS C 5102 8.2 和 JIS C 5025 试验。 在 3 个互相垂直的方向分别施加 2 小时振动，共 6 小时 To comply with JIS C 5102 8.2and JIS C 5025 Direction and duration of vibration: 3 orthogonal directions mutually each for 2 hours, total 6 hours	测量电容器应无接触不良开路或短路，无可见机械损伤。 When the capacitors is measured there shall be no intermittent contacts, or open or short circuiting There shall be no such mechanical damage.
5.2.3	可焊性 Solder ability	依据 IEC60068-2-2 进行试验 焊锡温度：250±5℃ 浸入时间：2.0±0.5 秒 To comply with IEC60068-2-2 Temperature or solder: 250±5℃ Dipping time: 2±0.5sec.	浸入焊锡的引线表面积约90%以上应附着新锡 At least 90% of circumferential surface of the dipping portion of termination shall be covered with new solder.

5.3 耐久性测试 ENDURANCE PERFORMANCE

序号 NO	项目 Item	测试方法 Test method	特性 Performance
5.3.1	耐焊接热 Resistance to soldering heat	电容器通过回流焊加热 回流焊条件： 请参考第 9 点 The capacitor is held on heating for reflow soldering. Reflow soldering profile: Please refer to Item 9	容量变化：在初始值±10%范围内 损失角正切值：不大于规定值 漏电流：满足 5.1.3 要求 外观：无异状 Variation of capacitance: Within ±10% of the initial value before test. Dissipation factor: Not more than the specified value Leakage current: To satisfy No.5.1.3 Appearance: No remarkable abnormality.
5.3.2	稳态湿热 Resistance to damp heat (steady state)	试验温度：60±2℃ 试验时间：500±8h 相对湿度：90% 试验后，电容器在标准大气条件下 1~2 小时，然后测试参数 Test temperature : 60±2℃ Test time :1000±8h Relative humidity: 90~95% After completion of test, the capacitors shall be subjected to standard atmospheric conditions for 1 to 2 hours, after which measurements shall be made.	容量变化：在初始值+50%-20%范围内 损失角正切值：不大于规定值200% 漏电流：不大于规格值300% 外观：无异状 Capacity variation: within the initial range of +50%-20%. Loss Angle tangent value: not more than 200% of the specified value Leakage current: Leakage current: not more than 300% specification value Appearance: No remarkable abnormality.

5.3.3	高温负荷试验 Load life test	试验温度：105±2℃，施加额定电压 2000 小时 Application of the rated voltage at a temperature of 105±2℃ for 2000 hours	容量变化：在初始值±20%范围内 损耗角正切值：不超过规定值的 200% 漏电流：在规定值以内 外观：无异状 Variation of capacitance: Within ±20% of the initial value before test. Dissipation factor: Within 200% of the specified value Leakage current: Within the specified value Appearance: No remarkable abnormality.
5.3.4	高温贮存试验 Shelf life test	在 105±2℃环境下无负荷贮存 1000 h，至少恢复 16 小时后,施加额定电压 30 分钟。 The capacitors are then stored with no voltage applied at a temperature of 105±2℃for 1000 hours and then resumed 16 hours, applied the rated voltage for 30 minutes.	容量变化：在初始值±20%范围内 损耗角正切值：不超过规定值的 200% 漏电流：在规定值以内 外观：无异状 Variation of capacitance: Within ±20% of the initial value before test. Dissipation factor: Within 200% of the specified value Leakage current: Within the specified value Appearance: No remarkable abnormality.

6. 标记 MARKING

6.1 在电容器体上注明有如下内容：

The following items shall be marked indelibly on the capacitors.

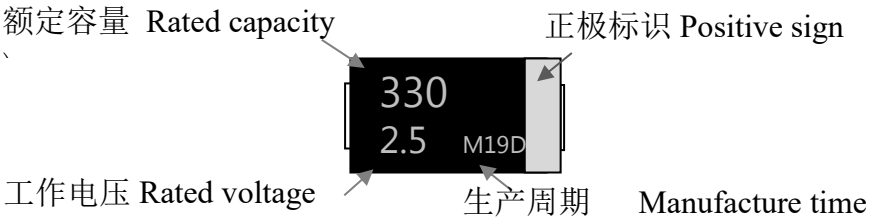

7.纹波电流补偿系数 Ripple Current Correction Factor

7.1 频率修正系数 Frequency correction factor

频率（Hz）	120Hz	1KHz	10KHz	100~300KHz
修正因子	0.10	0.45	0.50	1.00

7.2 温度修正系数 Temperature correction factor

温度	T≦45℃	45℃＜T≦85℃	85℃＜T≦105℃
修正因子	1.0	0.7	0.25

8. 包装 PACKING

8.1 包装标签 PACKING LABEL

内标签样本 inner label sample

外箱标签样本 outer label sample

包装标签内容 Packing Label Marked (the following items shall be marked on the label)

(Inside box or bag, outer box)

1)产品名称 Product name

2)生产批号 Lot No

3)数量 quantity

4)生产日期 Production date

5)产品编号 Part No

6)客户物料描述 Customer item code

8.2 批号 Lot number：

1 2	3 4	5 6	7	8 9 10 11	12 13
商标 YM	年 year	月 moth	材料标识 material code	生产序号 production number	分箱号 serial number

8.3 卷盘和编带尺寸 Reel & Carrier tape Dimension

卷盘 Reel

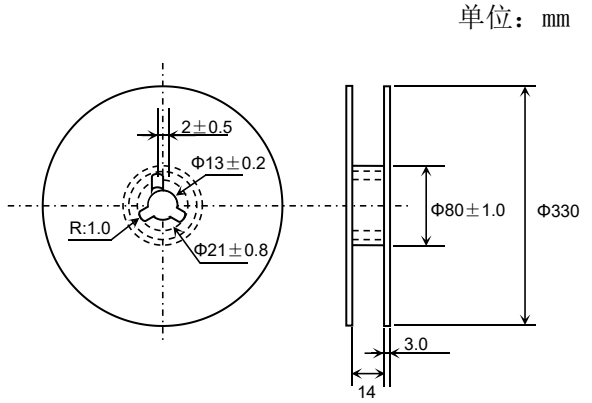

编带 Carrier Tape

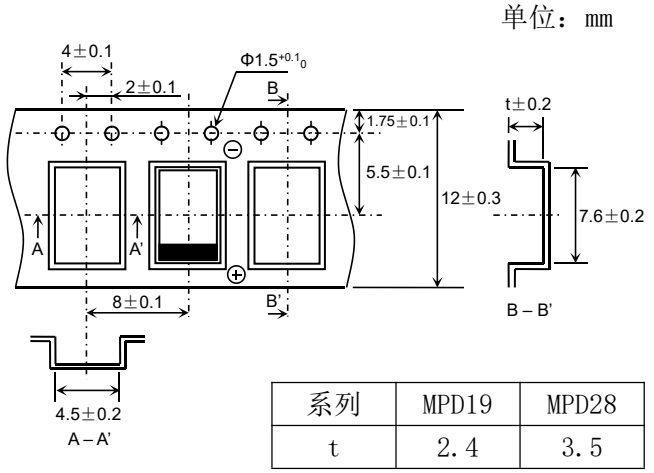

系列	MPD19	MPD28
t	2.4	3.5

8.4 外包装箱尺寸 Dimensions of outer carton box

外箱尺寸可随时变更，恕不另行通知，以适应卷盘尺寸。

Dimensions of the carton box are subject to change without notice for adjustment to roll size.

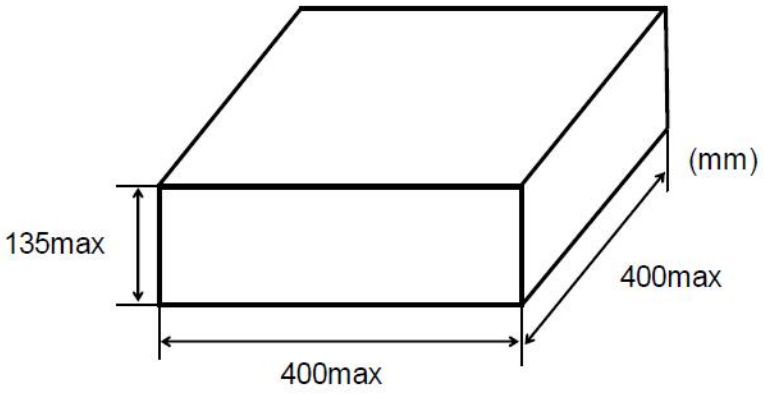

8.5 包装数量 Packaging quantity

产品尺寸 Product Size	1 卷（pcs） 1Reel（pcs）	总包装数量（pcs） Total Quantity（pcs）
7.3*4.3*1.9	3500	14000

9 叠层固态高分子电解电容器在回流焊时应满足以下条件：

The following conditions should be met when using Stacked solid polymer electrolytic capacitors

无铅型回流焊允许条件 Lead free ty pe reflow soldering condition :

电容器表面温度在 T℃以下；Temperature at surface of capacitor should below T ℃.

电容器表面温度在 200℃以上的时间不能超过 t 秒。T_1 ℃以上的时间不可超过 t_1；

The time of the surface temperature of the capacitors above 200 ℃ cannot exceed t second.

The time of the surface temperature of capacitors above T_1 ℃ can not exceed t_1.

预热控制在 100℃～200℃ 180 秒以内。

Preheat should be made between 100 ℃～ 200 ℃ and for maximum 180 seconds.

系列名称 Series	产品尺寸 size	T (℃) ①	T_1 (℃)	t (sec) ②	t_1 (sec) ③	回流焊次数 Reflow cycle
MPD19	7.3*4.3*1.9mm	260	230	120	40	2 max

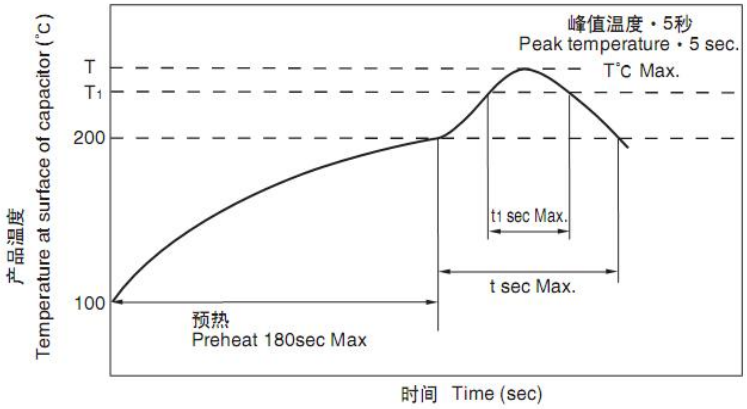

①峰值温度 peak temperature

②超过 200℃的时间（MAX）

Max time above 200 ℃

③超过 T_1 的时间为（MAX）

Max time above T1

出现超过允许条件的情况，请联系我们。

If other condition over maximum, please contact us.

当出现错焊时请进行手动重焊。此时，请设定烙铁尖端温度为 350±10℃，对电容器进行 10±0.5 秒的焊接。

When there is mistake during soldering, please re-solder manually, the temperature of soldering iron should be set at 350±10℃， and the soldering time on capacitor is 10±1 seconds.

10 产品编码规则 Product Code Rules

1	2	3	4	5	6	7	8	9	10	11	12	13	14	15	16
产品系列			额定容量编码			容量范围编码	额定电压编码		外形尺寸代码			ESR 标注代码			

产品系列	
系列	编
MPD19	MPD
MPD28	MPD
MPD10	MPD
MPB19	MPB

额定工作电压	
电压	编码
2V	0D
2.5V	0E
4V	0J
6.3V	0L
10V	1A
16V	1C
20V	1D
25V	1E
35V	1V
50V	1H

额定容量			
容量	编码	容量	编码
8.2uf	8R2	120uf	121
10uf	100	150uf	151
15uf	150	180uf	181
22uf	220	220uf	221
27uf	270	270uf	271
33uf	330	330uf	331
39uf	390	390uf	391
47uf	470	470uf	471
56uf	560	560uf	561
68uf	680	680uf	681
82uf	820	820uf	821
100uf	101		

容量范围	
级别	编码
±20%	M
-35~+10%	3

外形尺寸	
尺寸（mm）	代码
7.3*4.3*1.9	D19
7.3*4.2*2.8	D28
7.3*4.3*1.0	D10
3.5*2.8*1.9	B19

ESR 标注代码	
4.5mΩ	4R5R
6mΩ	006R
9mΩ	009R
12mΩ	012R
15mΩ	015R
20mΩ	020R
25mΩ	025R
30mΩ	030R
40mΩ	040R
80mΩ	080R

11．其他 The others

11.1 叠层高分子固态铝电解电容器的应用上的重要信息

Important information on the application of Stacked polymer solid state aluminum electrolytic capacitor

11.1.1. 电解电容是有极性的 DC electrolytic capacitors are polarized

当施加反向直流电压时，电容器将变为短路，电路中使用没有极化电容会被损坏，因为可施加到正电压的阴极端子的电路中流过异常电流。 When reverse voltage is applied on DC electrolytic capacitors, the capacitors will become short-circuited please use no polarized capacitors in the circuit be damage due to abnormal current flows through the capacitors since the circuit where the positive voltage may be applied to the cathode terminal.

11.1.2. 使用电容器额定电压 Use capacitors within rated voltage

当电容器用比额定电压更高的电压时，漏电流增加，特性显着恶化，并在很短的时间内发生损坏的结果。请特别小心的峰值电压不应超过额定电压。When capacitors is used at higher voltage than the rated voltage, leakage current increases, characteristics drastically deteriorate and damage in a short period may occur as a result. Please take extra caution that the peak voltage should not exceed the rated voltage.

11.1.3. 充电和放电应用 Charge and discharge application.

当铝电解电容器用于快速充电和放电的应用，其寿命可缩短减少，热量上升，等等。

When aluminum electrolytic capacitors for general purpose are employed in rapid charge and discharge application, its life expectancy may be shortened by capacitance decrease, heat rise, etc.

11.1.4. 存储电容器 Store the capacitors.

在已经存储了长时间的铝电容器其漏电流上升是常见的。存储温度越高，漏电流增大，因此，请采取预防措施，如存储位置。有电压被施加到电容器上时其漏电流逐渐减小。漏电流增加，会造成问题，因此，使用前在电路中施加电压（老化）。I creased leakage current is common in aluminum capacitors which have been stored for long period of time. The Higher the storage temperature, the higher the leakage current increase, therefore please take precautions concerning the storage location. The leakage current decreases gradually as voltage are applied to the capacitor. In cases where increased leakage current causes problems in the circuit, apply voltage (aging) before using.

11.1.5 适用于电容器的纹波电流不应超过额定的值

Ripple current applied to capacitors should not exceed the rated value.

如果纹波电流超过指定值，过多的热量会减少容量和缩短电容寿命。因此纹波电压的峰值该小于额定电压。Excessive heat will reduce capacitance and result in shortened life of capacitor if ripple currents exceeding the specified rated value are applied. The peak value of the ripple voltage should be less than the rated voltage.

11.1.6. 环境温度 Ambient temperature.

叠层高分子固态铝电解电容器的寿命受环境温度的影响。人们普遍表示，温度每下降 10℃寿命加 5 倍。

The life of laminated polymer solid aluminum electrolytic capacitor is affected by the ambient temperature. It is generally stated that the life of a temperature drop of 10 °C is increased by 5 times.

11.1.7 在焊接过程中的热应力 Heat stress at the soldering process

必须严格遵守规定的回流条件。在其他条件下焊接可能会导致产品短路和 ESR 增加。

Specified re-flow conditions must be strictly observed. Soldering under other conditions can cause short circuits and increases in ESR.

11.1.8 保管 take care of

本产品为湿敏元器件，湿敏等级 Level 3。

This product is a humidity sensitive component, humidity sensitive Level 3。

本产品必须实施防湿保管管理，关于防湿包装开封前后的保管状态，请按照下列的规定进行管理。(如果超过以下条件时，则会因封装的吸湿引起贴装时的热应力破坏外包装及内部的元件。

This product must carry out the anti-moisture storage management, regarding the condition of the storage before and after the anti-moisture packaging is opened, please carry on the management According to the following regulations. (If the following conditions are exceeded, the thermal stress caused by the encapsulation will damage the external packaging and the internal components.)

保管环境 Custody environment

温度：5℃~30℃，湿度：小于 70%

Temperature: 5 °C ~ 30 °C, humidity: less than 70 %

防湿包装开封前的保管期限：制造后 2 年

Maintenance period before the dry package is opened: 2 years after manufacture

防湿包装开封后的保管期限：7 天

Maintenance period after opening of wet-proof packaging: 7 days

11.2 该产品是无铅和环保 This product is lead free and environmental friendly.

产品按照 ROHS 的标准，六种有害物质最大不超过下列要求：These products according to the standard of ROHS, it means the max capacitance of six harmful material not over the following request:

Cd	＜100PPM	Pb	＜1000PPM	Hg	＜1000PPM
Cr^{6+}	＜1000PPM	PBBs	＜1000PPM	PBDEs	＜1000PPM

X-ON Electronics

Largest Supplier of Electrical and Electronic Components

Click to view similar products for Aluminium Organic Polymer Capacitors ***category:***

Click to view products by Ymin ***manufacturer:***

Other Similar products are found below :

750-1809 SEAU0A0102G MPP104K6130714LC MPP223J5130508LC MPP104K6130612LC MPP684K4241219LC PPS333KD241017LC MPP472K4130408LC PCZ1V221MCL1GS HHXD500ARA470MHA0G NPXB1001B271MF NPXB1101B391MF NPXC0571B221MF NPXC0701B331MF NPXB0901B391MF NPXD0701A471MF HHXD630ARA330MJA0G HHXD350ARA270MF61G HHXD350ARA220ME61G HHXD350ARA101MHA0G HHXD350ARA680MF80G APXJ200ARA151MF61G RS81C271MDN1CG APSF6R3ELL821MF08S PM101M016E058PTR PM101M025E077PTR SPZ1EM221E10P25RAXXX APSE2R5ETD821MF08S SPZ1EM681F14O00RAXXX SPZ1AM102F11000RAXXX SPV1VM471G13O00RAXXX SPZ1VM821G18O00RAXXX SPV1HM331G15O00RAXXX SVZ1EM221E09E00RAXXX PM101M035E077PTR HV1A227M0605PZ HV1C107M0605PZ HV1C227M0607PZ HV1H107M0810PZ HV1E107M0607PZ HV1V106M0605PZ HV1V476M0605PZ HV1H227M1010PZ HV0J337M0607PZ HV1A477M0607PZ HV1E566M0605PZ HV1V227M0810PZ HV0J108M0810PZ M2101M035C070RT SVZ1EM471FBRE00RAXXX