YINGJIAO®

YSDH240 SERIES 240W

Yingjiao's higher performance family of single phase din rail power suppplies were designed with metal housing and for full range AC input from 90VAC TO 264V AC.
With higher efficiency, the entires series have built-in DC OK relay contact and higher peak power,they also operate in wide temperature range.
The series offer diverse solutions for demanding automation around the world

Features

- Higher Peak Power
- Built-in Active PFC Function
- Built-in DC Ok Relay Contact
- DC Output Voltage Adjustable
- 100% Full Load Burn-in Test
- Three Years Warranty

Model Information

Yingjiao Part number	DC VOLTAGE	RATED CURRENT (Max.)	RATED POWER	PEAK POWER (Note.4)	VOLTAGE ADJ. RANGE
YSDH240-24010000	24V	10A	240W	360W (3sec.)	24-28V
YSDH240-48005000	48V	5A	240W	360W (3sec.)	48-55V

Input

VOLTAGE RANGE	90 ~ 264VAC, 127 ~ 370VDC
FREQUENCY RANGE	47 ~ 63Hz
POWER FACTOR (Typ.)	0.94/230VAC at full load 0.99/115VAC at full load
EFFICIENCY (Typ.) (Note.6)	90%/115VAC 93%/230VAC
AC CURRENT (Typ.)	2.6A/115VAC 1.3A/230VAC
INRUSH CURRENT (Typ.)	33A/115VAC 55A/230VAC
LEAKAGE CURRENT	<1mA / 240VAC

Output

RIPPLE & NOISE (max.) (Note.2)	100mVp-p YSDH240-24010000 120mVp-p YSDH240-48005000
VOLTAGE TOLERANCE	±2.0%
LINE REGULATION	±0.5%
LOAD REGULATION	±1.0%
SETUP, RISE TIME	650ms, 60ms/230VAC at full load 1300ms, 60ms/115VAC at full load
HOLD UP TIME (Typ.)	20ms/230VAC at full load 20ms/115VAC at full load

Protection

OVER LOAD	Normally works within 110 ~ 150% rated output power for more than 3 seconds and then shut down o/p voltage with auto-recovery >150% rated power, constant current limiting with auto-recovery within 3 seconds and may cause to shut down if over 3 seconds
OVER VOLTAGE	29 ~ 33V YSDH240-24010000 56 ~ 65V YSDH240-48005000 Protection type : Shut down o/p voltage, re-power on to recover
OVER TEMPERATURE	95℃ ±5℃ (TSW) detect on heatsink of power switch Protection type : Shut down o/p voltage, recovers automatically after temperature goes down

Function

DC OK REALY CONTACT RATINGS (max.)	60Vdc/0.3A, 30Vdc/1A, 30Vac/0.5A resistive load

Environment

WORKING TEMP. (Note.3)	-25 ~ +70℃ (Refer to "Derating Curve")
WORKING HUMIDITY	20 ~ 95% RH non-condensing
STORAGE TEMP., HUMIDITY	-40 ~ +85℃, 10 ~ 95% RH
MTBF	1160.3K hrs min. Telcordia SR-332 (Bellcore) ; 169.3K hrs min. MIL-HDBK-217F (25℃)
TEMP. COEFFICIENT	±0.03%/℃ (0 ~ 50℃)
VIBRATION	Component:10 ~ 500Hz, 2G 10min./1cycle, 60min. each along X, Y, Z axes; Mounting: Compliance to IEC60068-2-6

Safety and Electromagnetic Compatibility

SAFETY STANDARDS	UL508, BS/EN62368-1
WITHSTAND VOLTAGE	I/P-O/P:3KVAC I/P-FG:2KVAC O/P-FG:0.5KVAC O/P-DC OK:0.5KVAC
ISOLATION RESISTANCE	I/P-O/P, I/P-FG, O/P-FG:>100M Ohms / 500VDC / 25℃ / 70% RH
EMC EMISSION	Compliance to BS EN/EN55032 , BS EN/EN61000-3-2,-3
EMC IMMUNITY	Compliance to BS EN/EN61000-4-2,3,4,5,6,8,11, BS EN/EN55024, BS EN/EN61000-6-2 (BS EN/EN50082-2), BS EN/EN61204-3, heavy industry level

Note

1. All parameters NOT specially mentioned at 230VAC input, rated load and 25℃ of ambient temperature.

2. Ripple&noise are measured from peak to peak with band width limit of 20MHz(0.1uF and 47uF/50V parallel capacitor under DC output full load,AC nominal input 25℃ ambient temperature).

3. Installation clearances: top with 40mm, bottom with 20mm, left and righ with 5mm. Increase the space to 10-15mm when the adjacent device is heat source.

4. It could hold up 3 seconds max when reached peak power 360W, please refer to peak loading curves.

5. Derating may be needed under low input voltage. Please check the derating curve for more details.

6. After 30 minutes of burn-in.

7. The ambient temperature derating of 3.5 ℃/1000m for operating altitude higher than 2000m(6500ft).

Dimensions & Weight

Length:	63mm / 2.48in
Width:	125mm / 4.92in
Height:	113.5mm / 4.47in
Weight:	1kg

Packing

Carton Size:	52.5 x 33 x 17.5 CM 20.67 x 12.99 x 6.89 in
Master Carton Quantities:	10pcs / Carton

Mechanical Specification

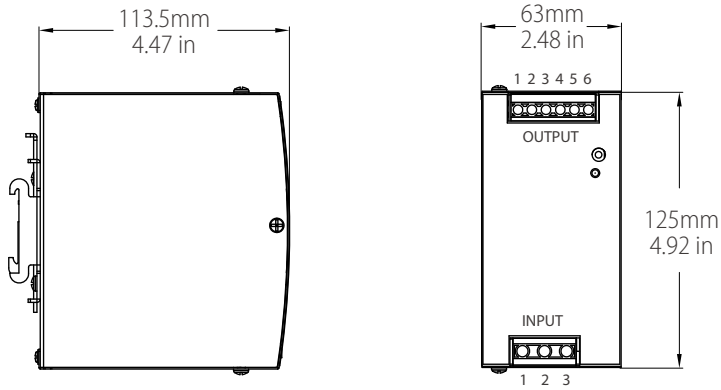

Input

No.	Description
1	FG ⏚
2	AC/N
3	AC/L

Output

No.	Description
1,2	Relay Contact
3,4	DC OUTPUT +V
5,6	DC OUTPUT -V

Block Diagram

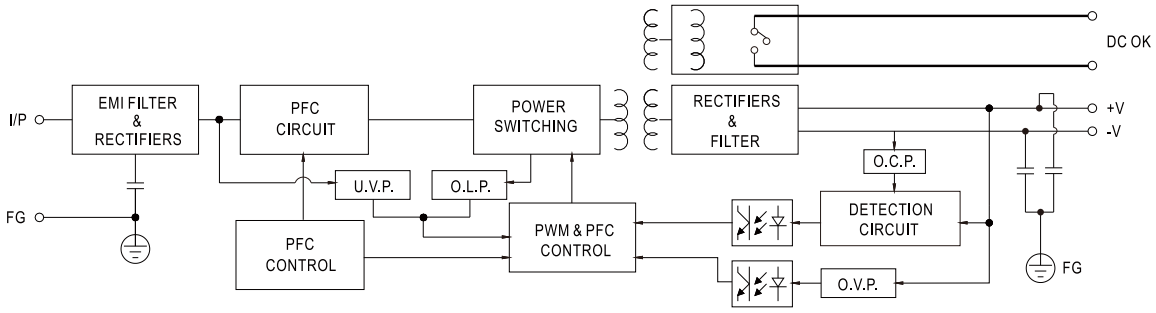

DC OK Relay Contact

Contact Close	PSU turns on / DC OK.
Contact Open	PSU turns off / DC Fail.
Contact Ratings (max.)	30V/1A resistive load.

Peak Loading

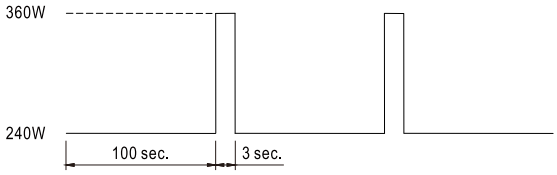

Full Load

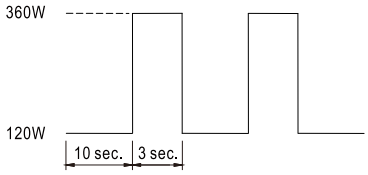

Half Load

Derating Curve

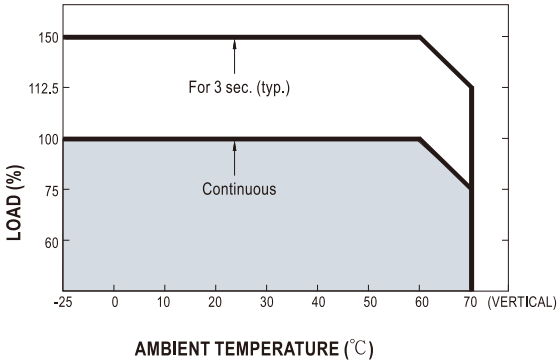

Static Characteristics

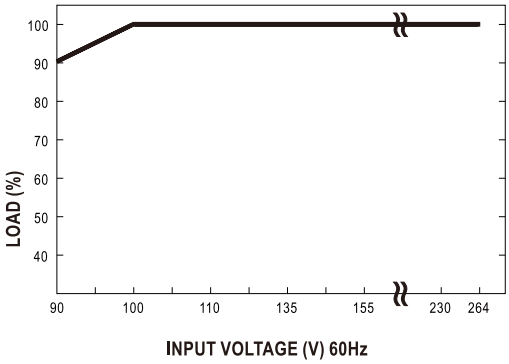

X-ON Electronics

Largest Supplier of Electrical and Electronic Components

Click to view similar products for DIN Rail Power Supplies ***category:***

Click to view products by Yingjiao ***manufacturer:***

Other Similar products are found below :

DVP01PU-S DVPPS01 DVPPS02 PS-C24024 ADNB040-24-1PM-C SS14011524 PSC-6024 PS-C12024 PSC-2024 PSD-A120W12 NDR-7524 787-1200. AMED75-48SJZ 1SVR427043R1200 50995 50903 EL50-D 18924-9989 50996 HDN-3024 ISEDR-120-24 1335699 1335698 SPM3051 POS DIN30W24 SPB-015-12 EL50-B 50905 DRB240-48-1 DRS-480-48 POS DIN30W15 POS MDIN60W12 18924-9988 HDN-3012 DRB480-48-3-A1 CFM50S240-SD DRB480-24-3-A0 DRB240-24-3-A0 DRB480-72-3-A1 DRB480-72-3-A0 POS DIN60W24 XCSD1030W012VAA DRB120-12-3-A1 POS DIN60W15 CFM70S050-SD DRB960-24-3-A0 50904 SPB-030-12 DRB480-48-3-A0 DRB960-24-3-A1