# Sensor-Actuator Interfaces and Cables, Round Plugs and IP 67 Remote-I/O Systems

Catalogue 2013/2014

Signal and Power Transmission

Weidmüller

# The World of Industrial Connectivity

As experienced experts we support our customers and partners around the world with products, solutions and services in the industrial environment of power, signal and data. Immerse yourself in our world of Industrial Connectivity.
Let's connect.

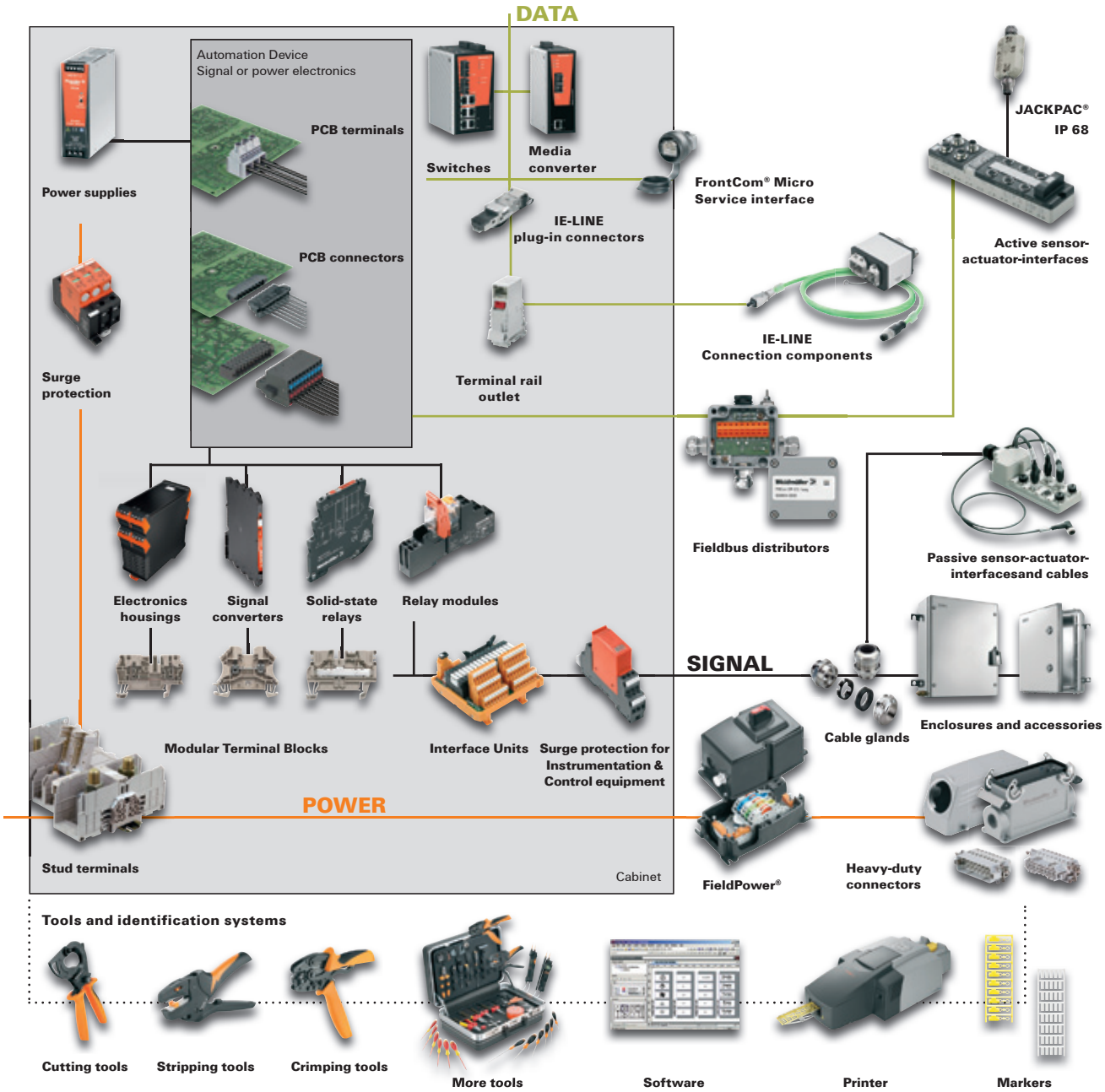

# Dear Customers,

The PDF versions of our catalogues offer practical additional functions, helping you to find your way around our product range and simplifying the ordering process.

In addition to the catalogue, the PDF also contains:

- Internal page links
- Links to the online catalogue

Try it out for yourself. Click the order number to obtain more detailed information and close-up images via you web browser. The links in the PDF file also enable you to go directly to the next desired catalogue page.

## Further Weidmüller product catalogues can be accessed by clicking the following:

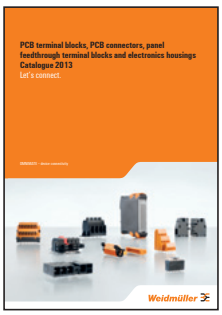

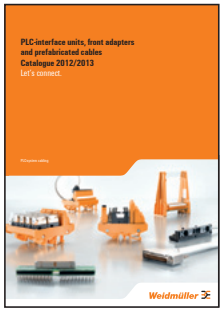


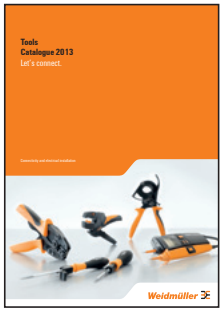

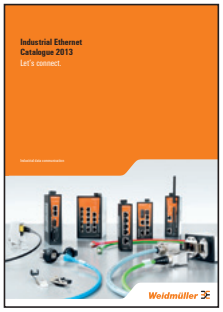

# Sensor-Actuator Interfaces and Cables, Round Plugs and IP 67 Remote-I/O Systems
Catalogue 8


**Sensor-Actuator Interfaces and Cables, Round Plugs and IP 67 Remote-I/O Systems**

Sensor Actuator Interface

M8, M12 Sensor and actuator cables

M8, M12 Fieldbus, data cables and accessories

M8, M12 Plug in connectors and protective caps

7/8" connectors

IP 67 Remote I/O system SAI Active

SAI empty housing

JACKPAC® (IP 67)

Passive distributors

M23 Connectors and cables

Tools and markers

**Appendix**

**Technical appendix**

**Index**

Search according to type or order number
Addresses worldwide

# M8, M12 Sensor and actuator cables

**M12 one end without connector**
Page B.11

**M12 one end without connector, shielded**
Page B.17

**Twin cabling M12 one end without connector**
Page B.18

**M8 one end without connector**
Page B.19

**M5 one end without connector**
Page B.23

**Connecting cables M12 to M12**
Page B.25

**Connecting cables M12 to M12**
Page B.26

**Connecting cables M12 to M8**
Page B.29

**Connecting cables M8 to M8**
Page B.32

**Twin sensor cables**
Page B.37

**M12 one end without connector, B-coded**
Page B.43

**Valve cables one-sided**
Page B.50

**Valve M12**
Page B.56

# M8, M12 Fieldbus, data cables and accessories


**PROFIBUS-DP - cables** Page C.6

**PROFIBUS-DP - plug-in connector (M12, Sub-D)** Page C.10

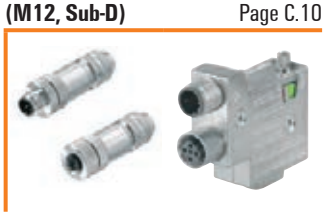

**PROFIBUS-DP - FBCon T-distributor** Page C.22

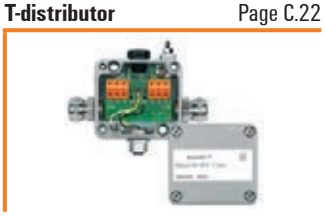

**PROFIBUS-PA - cables** Page C.28

**PROFIBUS-PA - plug-in connector** Page C.31

**PROFIBUS-PA - FBCon T-distributor** Page C.34

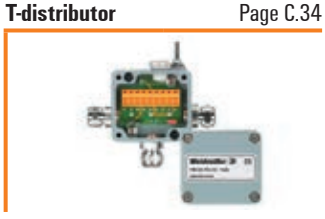

**PROFIBUS-PA - FBCon T-distributor with surge protection** Page C.40

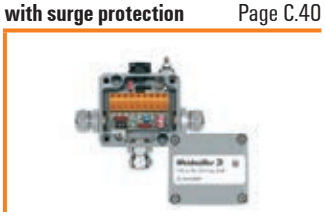

**PROFIBUS-PA - FBCon T-distributor ATEX Ex(ia)** Page C.50

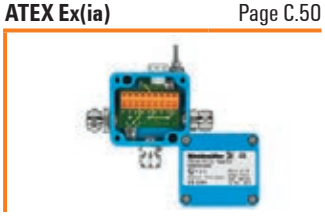

**ASI - SAI distributor** Page C.59

**ASI - Cables** Page C.60

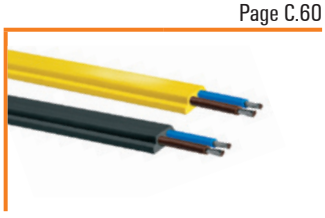

**ASI - T-piece** Page C.61

**CANopen & DeviceNet™ - cables (M12, M8)** Page C.62

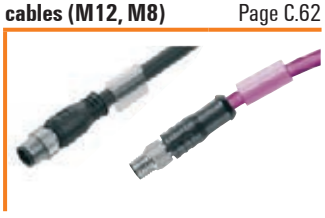

**CANopen & DeviceNet™ - connectors** Page C.67

**EtherCAT** Page C.68

**Ethernet - cables** Page C.69

**Ethernet - plug-in connector** Page C.77

**FOUNDATION Fieldbus - connector (7/8")** Page C.80

**Accessories cable glands** Page C.81

# M8, M12 Plug in connector and protective caps

**Customisable connectors**
**M12** Page D.7

**Customisable connectors**
**M8** Page D.20

**Insulation displacement connection**
**M12** Page D.24

**Insulation displacement connection**
**M8** Page D.26

**Y-distributor**
Page D.28

**Twin plugs and wall bushings**
Page D.30

**Protective caps**
Page D.31

**Built in plugs**
**M12** Page D.33

**Built in plugs**
**M8/M5** Page D.35

**Valve plugs for custom assembly**
Page D.40

**Protective sleeve adapter**
Page D.42

# 7/8" connector

**7/8" connector**
Page E.6

**7/8" built-in plug**
Page E.8

**7/8" one end without connector**
Page E.11

# IP 67 Remote I/O system SAI Active

**SAI-AU for PROFIBUS-DP**
Page F.8

**SAI-AU for CANopen**
Page F.12

**SAI-AU for DeviceNet™**
Page F.16

**SAI-AU Pro Gateway for PROFIBUS-DP**
Page F.22

**SAI-AU Pro Gateway for DeviceNet™**
Page F.24

**SAI-AU Pro Gateway for Modbus ASCII**
Page F.26

**SAI-AU Pro subbus modules with digital inputs/outputs**
Page F.28

**SAI-AU Pro subbus modules with analogue input/outputs**
Page F.29

**SAI-AU Pro subbus modules "counter"**
Page F.30

**SAI-AU Pro subbus modules "thermo"**
Page F.31

**SAI-AU Pro subbus module "PT100"**
Page F.32

**SAI-AU Wireless for PROFIBUS-DP**
Page F.36

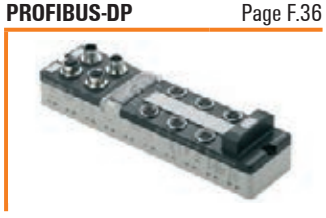

# SAI empty housing

**SAI empty housing**

Page G.8

# JACKPAC® (IP 67)

**JACKPAC®**

Page H.3

**JACKPAC® test**

Page H.6

**Empty housing SAI JACKPAC®**

Page H.8

# Passive distributors


**M12**
Page I.8

**M12 Line**
Page I.11

**M12 DIP with DIP-switch**
Page I.14

**M12 ECO**
Page I.16

**M12 Push-Pull**
Page I.18

**M12 CNOMO**
Page I.23

**M12 bayonet joint**
Page I.24

**M12 IDC**
Page I.26

**M12 VA stainless steel**
Page I.30

**M12 metal distributors**
Page I.32

**M12 distributors 1:1**
Page I.38

**M12 distributors, 8-pole**
Page I.39

**M12 for NPN and PNP sensors**
Page I.40

**M12 wall bushing**
Page I.41

**M12 Pre-assembled hood version**
Page I.44

**M8**
Page I.48

**M8 Line**
Page I.52

**M8 distributor with solder pins**
Page I.53

**M5 Line**
Page I.58

**M12 Ex Zone 1 and Zone 22**
Page I.60

# M23 Connectors and cables

**Housings for signal transmission** Page J.12

**Built-in connectors for signal transmission** Page J.13

**Inserts for signal transmission** Page J.14

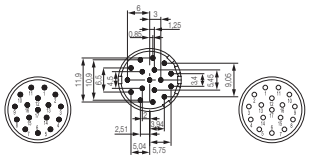

**Contacts for signal transmission** Page J.16

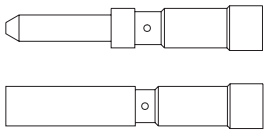

**Housings for power transmission** Page J.26

**Built-in connectors for power transmission** Page J.27

**Inserts for power transmission** Page J.28

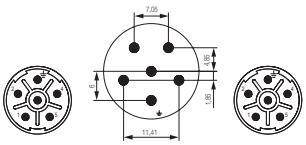

**Contacts for power transmission** Page J.29

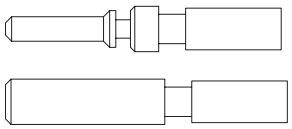

**Moulded M23 cables** Page J.30

**SAI distributor with M23** Page J.31

# Tools and markers

**Screwty® for M8/M12/M23** Page K.5

**Cutting tools** Page K.7

**Sheathing and insulation stripping tools** Page K.8

**M23 crimping tools** Page K.12

**Identification systems** Page K.14

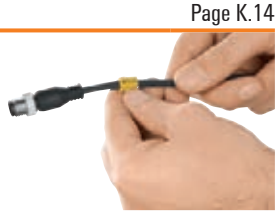

# Sensor Actuator Interface

**Sensor Actuator Interface** Introduction A.2

# SAI M12 Line

**The thin SAI M12 distributor with a single row linear design can be used in a variety of ways.**

Machines are becoming more complex as they integrate new functionality and collect increasing amounts of information. But at the same time, there is less space available for these increasing requirements.

The SAI M12 line of distributors has been designed by Weidmüller to meet the requirements posed by this trend. Our existing SAI M8 line of distributors has been designed to save space while still maintaining their versatility. These features are also found in the new SAI M12 distributor line.

The distributors are versatile because every plug in location can be labelled. Thus they can be mounted from the side or from the top down. They are easy to handle and simple to mount to machine profiles because of their single row design.

The M12 distributors are available as 4-way and 6-way modules, with M12 combi-plugs, or as a fixed cable version.

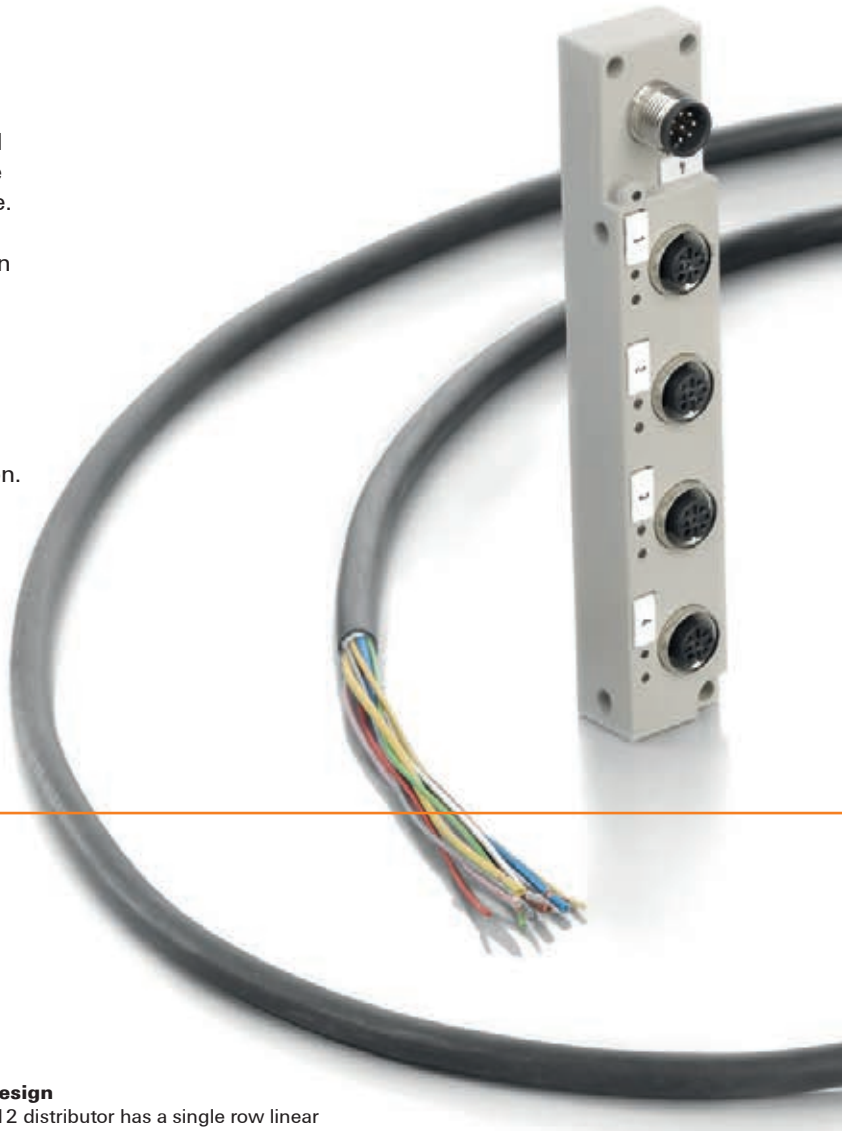

**Versatile marking options**
All plug in positions of the distributor can be labelled with markers so that all connection points are easily identified.

**Thin design**
The M12 distributor has a single row linear design which allows it to be handled easily.

**The corresponding number of connections**
The M12 distributors are available as 4-way and 6-way modules.

**Multiple variants**
Depending on your application or preference, the M12 distributors can be used either with a fixed, attached cable or with a combi-plug.

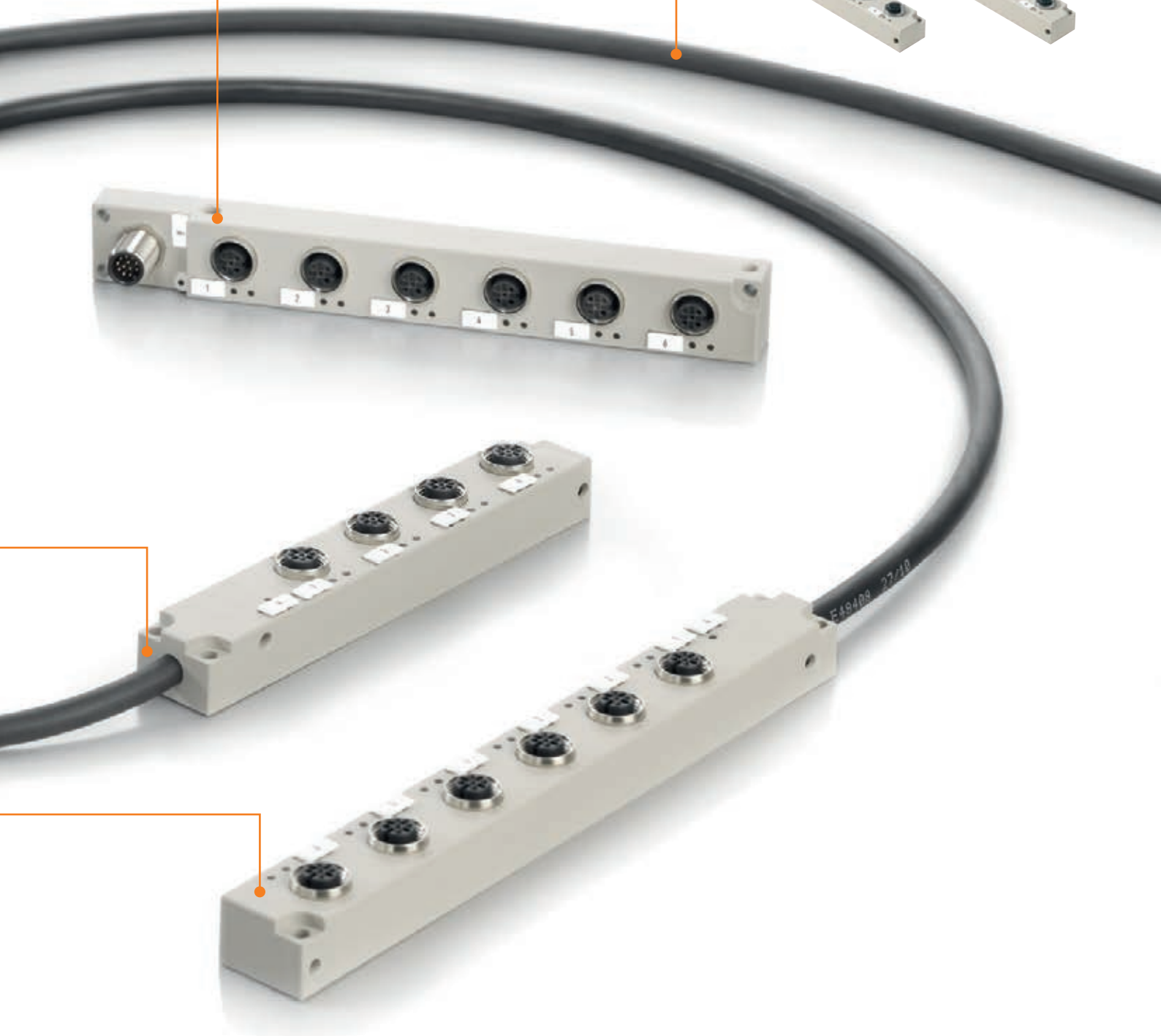

Technical data and ordering data can be found beginning on page I.9

# 7/8" connectors

## Rugged connector solution for supplying power

Weidmüller offers appropriate 7/8" connectors for a variety of different uses. They are available as customisable variants, built-in connectors with front-wall or rear-wall mounting, and as moulded (encapsulated) cables. The contact carriers are designed with 3, 4 or 5 poles. The contacts are gold plated to ensure a long lifespan.

The customisable variants of these products have compact dimensions, yet can still be fitted with a screw wire connection. The 3-pole version is rated for 12 A while the 4- and 5-pole versions are rated for 9 A. One pin is always designated as the PE contact.

The rated voltage is always at least 250 V. These features make the connector perfect for supplying power to devices.

**High dielectric strength**
A high dielectric strength of at least 250 V is ensured by the wide contact gap. This allows the product to be used as a power supply.

**Excellent transmission reliability**
The gold-plated contacts and the low insertion force both help to ensure excellent transmission reliability.

**Rugged design**
Extra rugged, moulded cables are available for series production.

**Pluggable and safe device connectivity**
Receptacle connectors for front-wall and rear-wall mounting provide you with pluggable device connectivity and IP 67 protection.

**Easy to assemble**
For easy assembly, the customisable versions can be fitted with the widely used screw wire connection.

**D-coded connectors made from stainless steel**
The D-coded connectors are made from 1.4404/316L stainless steel and feature a tension-clamp connection. They can be customised and are available with IP 69K protection.

**M8 patch cords for EtherCAT applications**
The industrial Ethernet cabling systems with M8 connectors are preferred for use with EtherCAT applications.

**M23 solder inserts**
The M23 solder versions are used for stand-alone soldering or for attaching to circuit boards.

Technical data and ordering data can be found beginning on page E.6

# High-quality M8 valve lines

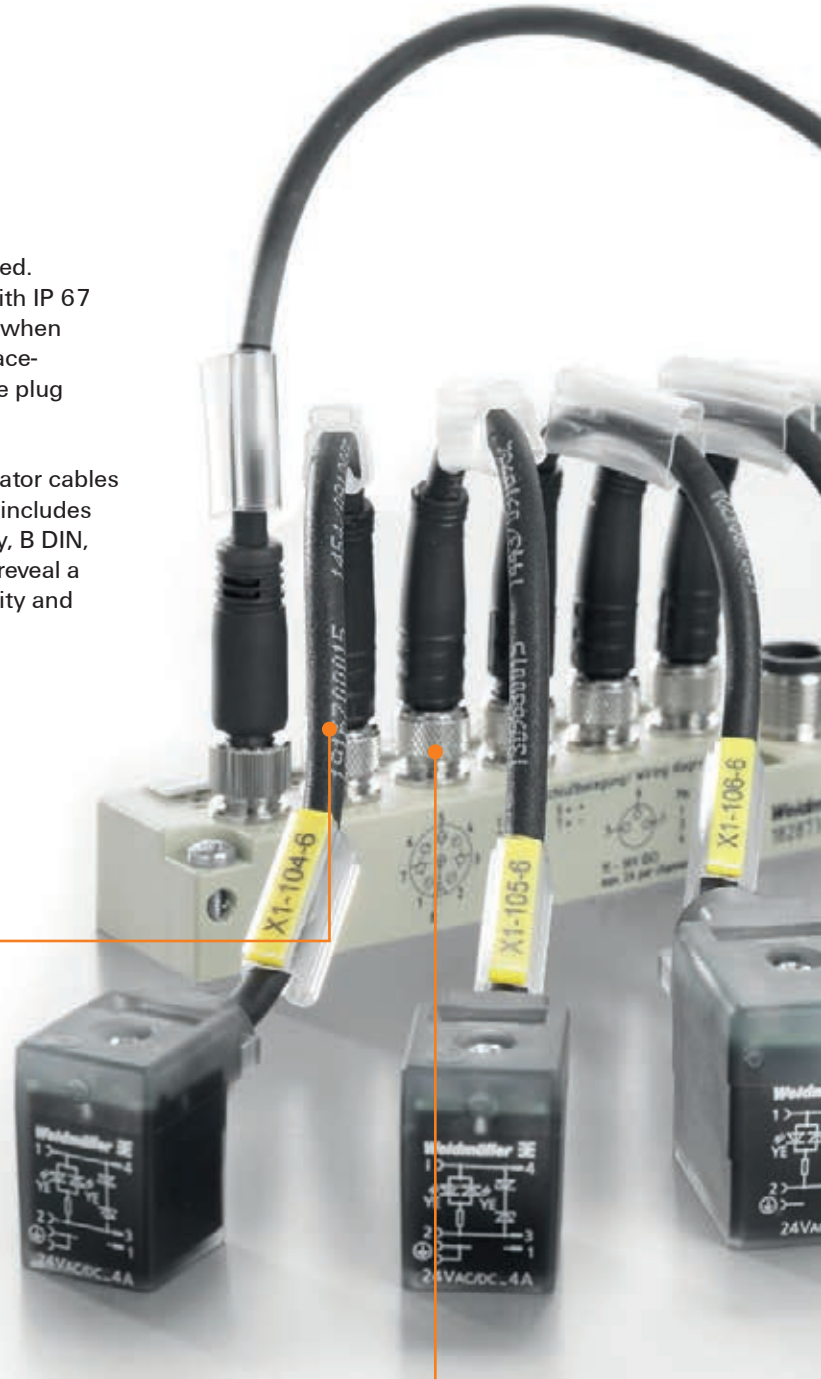


## Now with all five valve plug versions

The miniaturisation trend in device design continues unabated. Sub-bus modules are being used increasingly, particularly with IP 67 I/O devices. These should take up as little space as possible when installed in the field. Users are relying more and more on space-saving M8 connectors to minimise the space taken up by the plug connection.

In support of this trend, we are offering the appropriate actuator cables in a variety of application-specific versions. Our product line includes cables with all five valve-connector types: types A, B industry, B DIN, C Industry and C DIN. The specifications for these products reveal a successful balance of space-saving size combined with quality and load resistance.

**Flexible lengths**
The cables are available in different versions with a minimum length of only 15 cm.

**Compact yet durable**
The encapsulated moulding of the M8 connector ensures that the connectors are not just compact, but also high-quality and durable.

**Injection-moulded valve connectors**
High-quality components achieved using state-of-the-art production methods: The moulding around the valve connectors gives them a rugged, high-quality build. A factory test conducted prior to shipment eliminates the risk of assembly errors.

**Round plugs for the circuit board**
We offer many versions of our round plugs for the circuit board – including straight/angled, male/female, M8/M12, and with A/B/D coding.

**M16 connectors**
We offer a wide line of M16 connectors for circuit boards and moulded connectors for field cabling.

**Shielded built-in round plugs**
Circular plugs with lead-out shields for wall installations result in significantly less interference in the device.

Technical data and ordering data can be found beginning on page B.53

# SAI empty housing in IP 67
# Modular sensor actuator interface, empty housing

The sensor actuator interface (SAI) line of empty housings with IP 67 protection has been designed by Weidmüller without encapsulation so that they are easy to install. Thus the SAI empty housings are well suited for customer specific layouts which they can implement themselves.

The reflow compatible M12 PCB connectors can withstand continuous operating temperatures of up to 105 °C. They can be ordered separately for customer specific housing solutions.

The housing series includes three sizes: a 54 mm wide version and two 30 mm wide versions in a short or a long execution.

The housings are easy to install and production is simplified by the reflow-compatible M12 PCB connectors. They can be installed on the PCB directly from the tray.

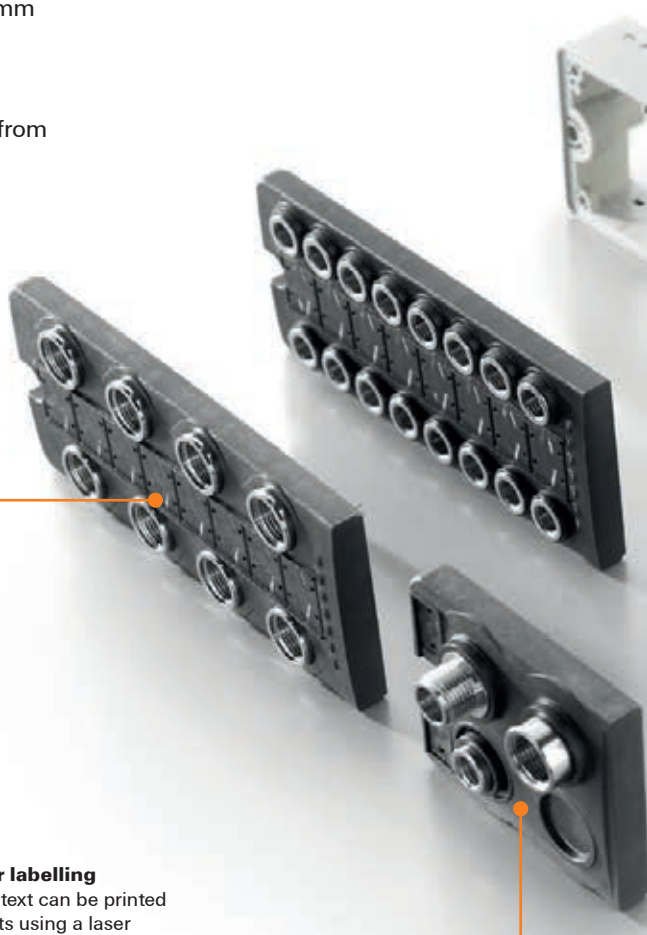

**On site diagnostics**
Illuminated arrow icons show the user the status of each.

**Designer option for laser labelling**
Symbols, data, diagrams or text can be printed in detail on the housing parts using a laser labelling process.

**Easy to service during installation**
Installation with snap on lugs enables simple and quick trouble shooting during application; this is only possible without encapsulation.

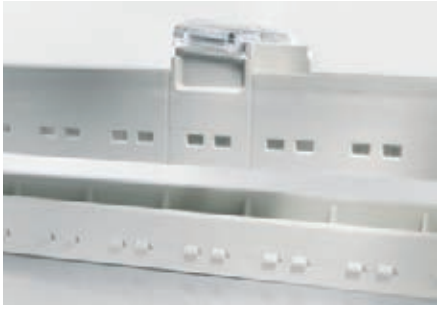

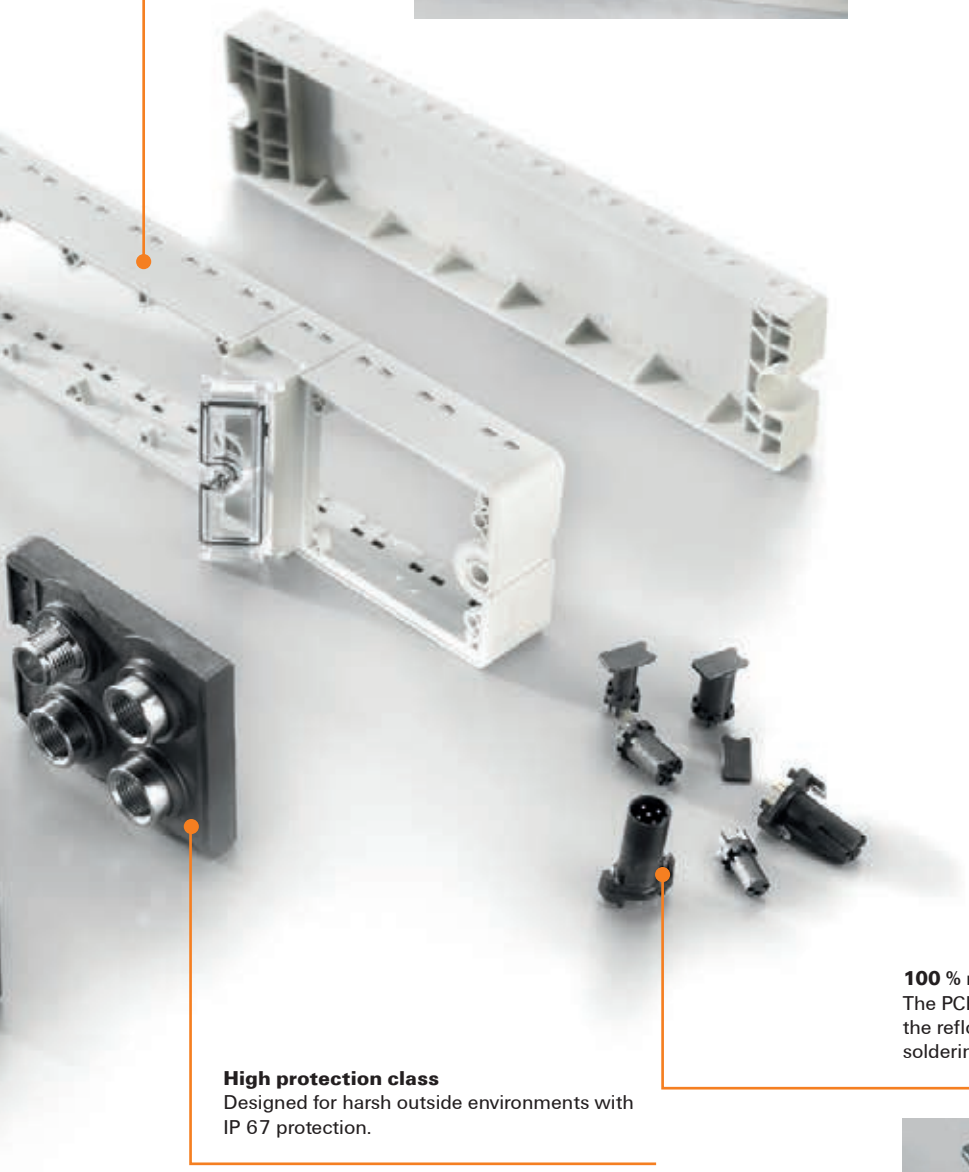

**Power reserve for safety**
Due to the use of Pocan® insulating plastic, the SAI empty housings are especially sturdy and resistant.

**Wide variety of variants**
The M12 PCB connectors are available as A-coded, B-coded and also D-coded versions.

**100 % reflow-compatible**
The PCB connectors fulfil the high demands on the reflow process and are suitable for all other soldering processes.

**High protection class**
Designed for harsh outside environments with IP 67 protection.

IP 67

Technical data and ordering data can be found beginning on page G.6

# Are you already a Weidmüller customer?

**Then why not order your M12 or M8 cables from us!**

Weidmüller supplies an extremely wide range of M12 and M8 cables, naturally with our proven Weidmüller quality assurance.

To answer as many demands as possible, we offer:

- PVC cables
- PUR/halogen-free cables

Of course, with very short delivery times and best conditions. Please do not hesitate to contacts us for a quote or to receive further information.

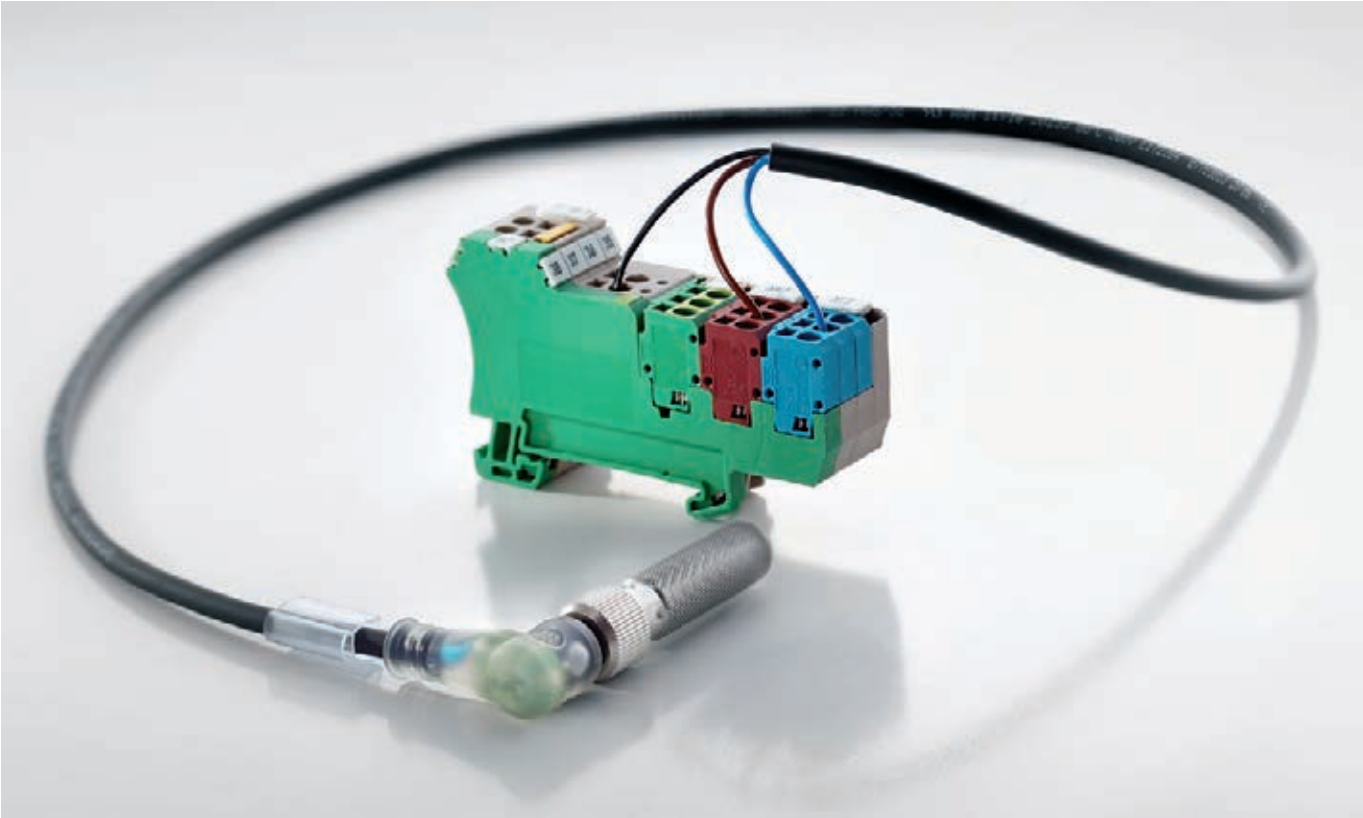

# M8, M12 Sensor and actuator cables


| | | |
|---|---|---|
| **M8, M12 Sensor and actuator cables** | Introduction | B.2 |
| | Overview of sensor cables | B.4 |
| | Sensor cables | B.10 |
| | Power cables | B.42 |
| | Valve cables | B.46 |
| | Connecting cable for sensors and actuators | B.56 |
| | Connecting cables for Weidmüller distributors | B.57 |

# SAI cable

Weidmüller manufacturers its own SAI cable. This ensures optimal versatility. We do not use fully automatic machines which are difficult to adapt. That is why Weidmüller is well known for delivering promptly with quick turnaround times, despite our wide variety of available options. We can also develop and produce solutions for specific customer requirements. We regularly produce cables, for example, with customer specific labels and logos.

We realise that the cost of having this increased flexibility can be the decisive factor. In order to meet your cost requirements, an additional production line has been specifically designed to keep costs down. This line produces top-selling products for exceptional efficiency and cost savings.

Sensor cables from Weidmüller: shown here with yellow and black cables, together with bus cables

## Easy to identify

The EAN number on each label can be scanned in.

## Resistant to vibration

M8 with vibration resistance

## High quality

Compatible for use in robots;
with recyclable, halogen-free cables

## Versatile

Customised cables

**One end without connector**

**Connecting cables**

**Valve cables**

**Connection cables / bus cables**

## Overview of sensor cables

| | | | | | One end free | | M8 socket straight | |
|---|---|---|---|---|---|---|---|---|
| | | | | | | | | |
| | | | No. of poles | | | | 4(S) 3(-) 1(+) | |
| | | | | Cable material | PUR halogen-free | PVC | PUR halogen-free | PVC |
| One end free | | | | 1.5 m | | | 9457450150 | 1927240150 |
| | | | | 3.0 m | | | 9457450300 | 1927240300 |
| | | | | 5.0 m | | | 9457450500 | 1927240500 |
| | | | | 10.0 m | | | 9457451000 | 1927241000 |
| | | | | variable | | | 9457450000 | 1927240000 |
| M8 plug | straight | | 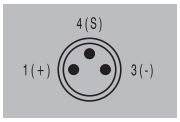 | 1.5 m | 1824590150 | 1927230150 | 1824570150 | 1927150150 |
| | | | | 3.0 m | 1824590300 | 1927230300 | 1824570300 | 1927150300 |
| | | | | 5.0 m | 1824590500 | 1927230500 | 1824570500 | 1927150500 |
| | | | | 10.0 m | 1824591000 | 1927231000 | 1824571000 | 1927151000 |
| | | | | variable | 1824590000 | 1927230000 | 1824570000 | 1927150000 |
| | | | 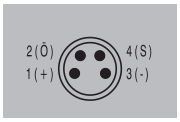 | 1.5 m | 1906270150 | 1927250150 | *** | *** |
| | | | | 3.0 m | 1906270300 | 1927250300 | | |
| | | | | 5.0 m | 1906270500 | 1927250500 | | |
| | | | | 10.0 m | 1906271000 | 1927251000 | | |
| | | | | variable | 1906270000 | 1927250000 | | |
| | 90° | | 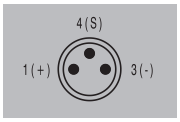 | 1.5 m | 1857550150 | 1927310150 | On request | On request |
| | | | | 3.0 m | 1857550300 | 1927310300 | | |
| | | | | 5.0 m | 1857550500 | 1927310500 | | |
| | | | | 10.0 m | 1857551000 | 1927311000 | | |
| | | | | variable | 1857550000 | 1927310000 | | |
| | | | 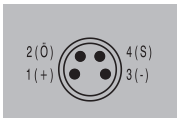 | 1.5 m | 1857560150 | 1927330150 | *** | *** |
| | | | | 3.0 m | 1857560300 | 1927330300 | | |
| | | | | 5.0 m | 1857560500 | 1927330500 | | |
| | | | | 10.0 m | 1857561000 | 1927331000 | | |
| | | | | variable | 1857560000 | 1927330000 | | |
| M12 plug | straight | | 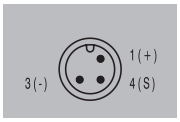 | 1.5 m | 9457810150 | 1925430150 | 9457770150 | 1938170150 |
| | | | | 3.0 m | 9457810300 | 1925430300 | 9457770300 | 1938170300 |
| | | | | 5.0 m | 9457810500 | 1925430500 | 9457770500 | 1938170500 |
| | | | | 10.0 m | 9457811000 | 1925431000 | 9457771000 | 1938171000 |
| | | | | variable | 9457810000 | 1925430000 | 9457770000 | 1938170000 |
| | | | 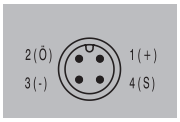 | 1.5 m | 9456100150 | 1925440150 | *** | *** |
| | | | | 3.0 m | 9456100300 | 1925440300 | | |
| | | | | 5.0 m | 9456100500 | 1925440500 | | |
| | | | | 10.0 m | 9456101000 | 1925441000 | | |
| | | | | variable | 9456100000 | 1925440000 | | |
| | | | 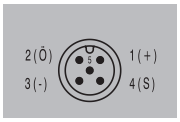 | 1.5 m | 9457610150 | 1925450150 | *** | *** |
| | | | | 3.0 m | 9457610300 | 1925450300 | | |
| | | | | 5.0 m | 9457610500 | 1925450500 | | |
| | | | | 10.0 m | 9457611000 | 1925451000 | | |
| | | | | variable | 9457610000 | 1925450000 | | |
| | 90° | | 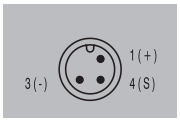 | 1.5 m | 9456690150 | 1925510150 | On request | On request |
| | | | | 3.0 m | 9456690300 | 1925510300 | | |
| | | | | 5.0 m | 9456690500 | 1925510500 | | |
| | | | | 10.0 m | 9456691000 | 1925511000 | | |
| | | | | variable | 9456690000 | 1925510000 | | |
| | | | 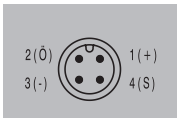 | 1.5 m | 1906260150 | 1925520150 | *** | *** |
| | | | | 3.0 m | 1906260300 | 1925520300 | | |
| | | | | 5.0 m | 1906260500 | 1925520500 | | |
| | | | | 10.0 m | 1906261000 | 1925521000 | | |
| | | | | variable | 1906260000 | 1925520000 | | |
| | | | 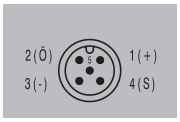 | 1.5 m | 9457670150 | 1925530150 | *** | *** |
| | | | | 3.0 m | 9457670300 | 1925530300 | | |
| | | | | 5.0 m | 9457670500 | 1925530500 | | |
| | | | | 10.0 m | 9457671000 | 1925531000 | | |
| | | | | variable | 9457670000 | 1925530000 | | |

**Preferred types / extracted from the complete line. Please make a separate enquiry for information about the M8 snap-on version, twin cabling and others.**

## M8 socket

| straight | | 90° | | | | 90° angle with 2 LEDs | |
|---|---|---|---|---|---|---|---|
| | | | | | | | |
| 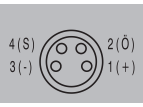  | | 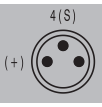  | | 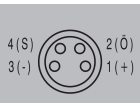  | | 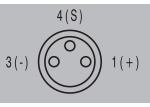  | |
| PUR halogen-free | PVC | PUR halogen-free | PVC | PUR halogen-free | PVC | PUR halogen-free | PVC |
| 9457850150 | 1927260150 | 9457380150 | 1927320150 | 9456150150 | 1927340150 | 9457460150 | 1927350150 |
| 9457850300 | 1927260300 | 9457380300 | 1927320300 | 9456150300 | 1927340300 | 9457460300 | 1927350300 |
| 9457850500 | 1927260500 | 9457380500 | 1927320500 | 9456150500 | 1927340500 | 9457460500 | 1927350500 |
| 9457851000 | 1927261000 | 9457381000 | 1927321000 | 9456151000 | 1927341000 | 9457461000 | 1927351000 |
| | 1927260000 | 9457380000 | 1927320000 | 9456150000 | 1927340000 | 9457460000 | 1927350000 |
| *** | *** | 1824580150 | 1927170150 | *** | *** | 1877250150 | 1927190150 |
| | | 1824580300 | 1927170300 | | | 1877250300 | 1927190300 |
| | | 1824580500 | 1927170500 | | | 1877250500 | 1927190500 |
| | | 1824581000 | 1927171000 | | | 1877251000 | 1927191000 |
| | | 1824580000 | 1927170000 | | | 1877250000 | 1927190000 |
| 1880470150 | 1927160150 | *** | *** | 1857660150 | 1927180150 | *** | *** |
| 1880470300 | 1927160300 | | | 1857660300 | 1927180300 | | |
| 1880470500 | 1927160500 | | | 1857660500 | 1927180500 | | |
| 1880471000 | 1927161000 | | | 1857661000 | 1927181000 | | |
| 1880470000 | 1927160000 | | | 1857660000 | 1927180000 | | |
| *** | *** | 1857670150 | 1927210150 | *** | *** | On request | On request |
| | | 1857670300 | 1927210300 | | | | |
| | | 1857670500 | 1927210500 | | | | |
| | | 1857671000 | 1927211000 | | | | |
| | | 1857670000 | 1927210000 | | | | |
| On request | On request | *** | *** | 1857680150 | 1927220150 | *** | *** |
| | | | | 1857680300 | 1927220300 | | |
| | | | | 1857680500 | 1927220500 | | |
| | | | | 1857681000 | 1927221000 | | |
| | | | | 1857680000 | 1927220000 | | |
| *** | *** | 9457980150 | 1938180150 | *** | *** | 9457760150 | *** |
| | | 9457980300 | 1938180300 | | | 9457760300 | |
| | | 9457980500 | 1938180500 | | | 9457760500 | |
| | | 9457981000 | 1938181000 | | | 9457761000 | |
| | | 9457980000 | 1938180000 | | | 9457760000 | |
| 9456660150 | 1938200150 | *** | *** | 9456670150 | 1938210150 | *** | *** |
| 9456660300 | 1938200300 | | | 9456670300 | 1938210300 | | |
| 9456660500 | 1938200500 | | | 9456670500 | 1938210500 | | |
| 9456661000 | 1938201000 | | | 9456671000 | 1938211000 | | |
| 9456660000 | 1938200000 | | | 9456670000 | 1938210000 | | |
| *** | *** | *** | *** | *** | *** | *** | *** |
| *** | *** | 1906330150 | 1938190150 | *** | *** | *** | *** |
| | | 1906330300 | 1938190300 | | | | |
| | | 1906330500 | 1938190500 | | | | |
| | | 1906331000 | 1938191000 | | | | |
| | | 1906330000 | 1938190000 | | | | |
| On request | On request | *** | *** | 1906340150 | 1938220150 | *** | *** |
| | | | | 1906340300 | 1938220300 | | |
| | | | | 1906340500 | 1938220500 | | |
| | | | | 1906341000 | 1938221000 | | |
| | | | | 1906340000 | 1938220000 | | |
| *** | *** | *** | *** | *** | *** | *** | *** |

## Overview of sensor cables

| | | No. of poles | Cable material | M12 socket straight | | | |
|---|---|---|---|---|---|---|---|
| | | | | 1(+) 4(S) 3(-) | | 1(+) 4(S) 2(Ō) 3(-) | |
| | | | | PUR halogen-free | PVC | PUR halogen-free | PVC |
| One end free | | | 1.5 m | 9457820150 | 1925570150 | 9457730150 | 1925580150 |
| | | | 3.0 m | 9457820300 | 1925570300 | 9457730300 | 1925580300 |
| | | | 5.0 m | 9457820500 | 1925570500 | 9457730500 | 1925580500 |
| | | | 10.0 m | 9457821000 | 1925571000 | 9457731000 | 1925581000 |
| | | | variable | 9457820000 | 1925570000 | 9457730000 | 1925580000 |
| M8 plug | straight | 4(S) 1(+) 3(-) | 1.5 m | 1937950150 | 1938230150 | *** | *** |
| | | | 3.0 m | 1937950300 | 1938230300 | | |
| | | | 5.0 m | 1937950500 | 1938230500 | | |
| | | | 10.0 m | 1937951000 | 1938231000 | | |
| | | | variable | 1937950000 | 1938230000 | | |
| | | 2(Ō) 1(+) 4(S) 3(-) | 1.5 m | *** | *** | 1937980150 | 1938260150 |
| | | | 3.0 m | | | 1937980300 | 1938260300 |
| | | | 5.0 m | | | 1937980500 | 1938260500 |
| | | | 10.0 m | | | 1937981000 | 1938261000 |
| | | | variable | | | 1937980000 | 1938260000 |
| | 90° | 4(S) 1(+) 3(-) | 1.5 m | On request | On request | *** | *** |
| | | | 3.0 m | | | | |
| | | | 5.0 m | | | | |
| | | | 10.0 m | | | | |
| | | | variable | | | | |
| | | 2(Ō) 1(+) 4(S) 3(-) | 1.5 m | *** | *** | On request | On request |
| | | | 3.0 m | | | | |
| | | | 5.0 m | | | | |
| | | | 10.0 m | | | | |
| | | | variable | | | | |
| M12 plug | straight | 3(-) 1(+) 4(S) | 1.5 m | 9457230150 | 1925300150 | *** | *** |
| | | | 3.0 m | 9457230300 | 1925300300 | | |
| | | | 5.0 m | 9457230500 | 1925300500 | | |
| | | | 10.0 m | 9457231000 | 1925301000 | | |
| | | | variable | 9457230000 | 1925300000 | | |
| | | 2(Ō) 3(-) 1(+) 4(S) | 1.5 m | *** | *** | 1906300150 | 1925310150 |
| | | | 3.0 m | | | 1906300300 | 1925310300 |
| | | | 5.0 m | | | 1906300500 | 1925310500 |
| | | | 10.0 m | | | 1906301000 | 1925311000 |
| | | | variable | | | 1906300000 | 1925310000 |
| | | 2(Ō) 3(-) 1(+) 4(S) | 1.5 m | *** | *** | *** | *** |
| | | | 3.0 m | | | | |
| | | | 5.0 m | | | | |
| | | | 10.0 m | | | | |
| | | | variable | | | | |
| | 90° | 3(-) 1(+) 4(S) | 1.5 m | 1821050150 | On request | *** | *** |
| | | | 3.0 m | 1821050300 | | | |
| | | | 5.0 m | 1821050500 | | | |
| | | | 10.0 m | 1821051000 | | | |
| | | | variable | 1821050000 | | | |
| | | 2(Ō) 3(-) 1(+) 4(S) | 1.5 m | *** | *** | On request | On request |
| | | | 3.0 m | | | | |
| | | | 5.0 m | | | | |
| | | | 10.0 m | | | | |
| | | | variable | | | | |
| | | 2(Ō) 3(-) 1(+) 4(S) | 1.5 m | *** | *** | *** | *** |
| | | | 3.0 m | | | | |
| | | | 5.0 m | | | | |
| | | | 10.0 m | | | | |
| | | | variable | | | | |

## M12 socket

| straight | | 90° | | | | | |
|---|---|---|---|---|---|---|---|
| | | | | | | | |
| 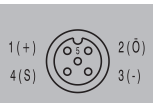  | | 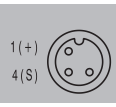  | | 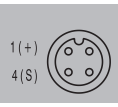  | | 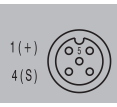  | |
| PUR halogen-free | PVC | PUR halogen-free | PVC | PUR halogen-free | PVC | PUR halogen-free | PVC |
| 9457910150 | 1925590150 | 9457320150 | 1925630150 | 9457740150 | 1925640150 | 9457690150 | 1925650150 |
| 9457910300 | 1925590300 | 9457320300 | 1925630300 | 9457740300 | 1925640300 | 9457690300 | 1925650300 |
| 9457910500 | 1925590500 | 9457320500 | 1925630500 | 9457740500 | 1925640500 | 9457690500 | 1925650500 |
| 9457911000 | 1925591000 | 9457321000 | 1925631000 | 9457741000 | 1925641000 | 9457691000 | 1925651000 |
| 9457910000 | 1925590000 | 9457320000 | 1925630000 | 9457740000 | 1925640000 | 9457690000 | 1925650000 |
| *** | *** | 1937960150 | 1938240150 | *** | *** | *** | *** |
| | | 1937960300 | 1938240300 | | | | |
| | | 1937960500 | 1938240500 | | | | |
| | | 1937961000 | 1938241000 | | | | |
| | | 1937960000 | 1938240000 | | | | |
| *** | *** | *** | *** | 1937990150 | 1938270150 | *** | *** |
| | | | | 1937990300 | 1938270300 | | |
| | | | | 1937990500 | 1938270500 | | |
| | | | | 1937991000 | 1938271000 | | |
| | | | | 1937990000 | 1938270000 | | |
| *** | *** | 1937970150 | 1938250150 | *** | *** | *** | *** |
| | | 1937970300 | 1938250300 | | | | |
| | | 1937970500 | 1938250500 | | | | |
| | | 1937971000 | 1938251000 | | | | |
| | | 1937970000 | 1938250000 | | | | |
| *** | *** | *** | *** | 1938000150 | 1938280150 | *** | *** |
| | | | | 1938000300 | 1938280300 | | |
| | | | | 1938000500 | 1938280500 | | |
| | | | | 1938001000 | 1938281000 | | |
| | | | | 1938000000 | 1938280000 | | |
| *** | *** | 9457390150 | 1925340150 | *** | *** | *** | *** |
| | | 9457390300 | 1925340300 | | | | |
| | | 9457390500 | 1925340500 | | | | |
| | | 9457391000 | 1925341000 | | | | |
| | | 9457390000 | 1925340000 | | | | |
| *** | *** | *** | *** | 9457310150 | 1925350150 | *** | *** |
| | | | | 9457310300 | 1925350300 | | |
| | | | | 9457310500 | 1925350500 | | |
| | | | | 9457311000 | 1925351000 | | |
| | | | | 9457310000 | 1925350000 | | |
| 9457340150 | 1925320150 | *** | *** | *** | *** | 9457270150 | 1925360150 |
| 9457340300 | 1925320300 | | | | | 9457270300 | 1925360300 |
| 9457340500 | 1925320500 | | | | | 9457270500 | 1925360500 |
| 9457341000 | 1925321000 | | | | | 9457271000 | 1925361000 |
| 9457340000 | 1925320000 | | | | | 9457270000 | 1925360000 |
| *** | *** | 1815670150 | 1925380150 | *** | *** | *** | *** |
| | | 1815670300 | 1925380300 | | | | |
| | | 1815670500 | 1925380500 | | | | |
| | | 1815671000 | 1925381000 | | | | |
| | | 1815670000 | 1925380000 | | | | |
| *** | *** | *** | *** | 1906310150 | 1925390150 | *** | *** |
| | | | | 1906310300 | 1925390300 | | |
| | | | | 1906310500 | 1925390500 | | |
| | | | | 1906311000 | 1925391000 | | |
| | | | | 1906310000 | 1925390000 | | |
| 9456500150 | On request | *** | *** | *** | *** | 9457900150 | 1925400150 |
| 9456500300 | | | | | | 9457900300 | 1925400300 |
| 9456500500 | | | | | | 9457900500 | 1925400500 |
| 9456501000 | | | | | | 9457901000 | 1925401000 |
| 9456500000 | | | | | | 9457900000 | 1925400000 |

## Overview of sensor cables

| | | | | M12 socket | | | |
|---|---|---|---|---|---|---|---|
| | | | | 90° angle with 2 LEDs | | | |
| | | | | | | | |
| | | No. of poles | | 1(+) 4(S) 3(-) | | 1(+) 4(S) 2(Ô) 3(-) | |
| | | | Cable material | PUR halogen-free | PVC | PUR halogen-free | PVC |
| One end free | | | 1.5 m | 9457800150 | 1925460150 | 9456380150 | 1925470150 |
| | | | 3.0 m | 9457800300 | 1925460300 | 9456380300 | 1925470300 |
| | | | 5.0 m | 9457800500 | 1925460500 | 9456380500 | 1925470500 |
| | | | 10.0 m | 9457801000 | 1925461000 | 9456381000 | 1925471000 |
| | | | variable | 9457800000 | 1925460000 | 9456380000 | 1925470000 |
| M8 plug straight | | 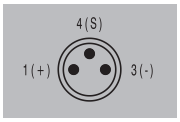  | 1.5 m | *** | *** | *** | *** |
| | | | 3.0 m | | | | |
| | | | 5.0 m | | | | |
| | | | 10.0 m | | | | |
| | | | variable | | | | |
| | | 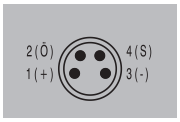  | 1.5 m | *** | *** | *** | *** |
| | | | 3.0 m | | | | |
| | | | 5.0 m | | | | |
| | | | 10.0 m | | | | |
| | | | variable | | | | |
| M8 plug 90° | | 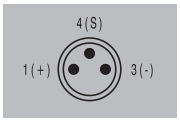  | 1.5 m | *** | *** | *** | *** |
| | | | 3.0 m | | | | |
| | | | 5.0 m | | | | |
| | | | 10.0 m | | | | |
| | | | variable | | | | |
| | | 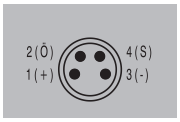  | 1.5 m | *** | *** | *** | *** |
| | | | 3.0 m | | | | |
| | | | 5.0 m | | | | |
| | | | 10.0 m | | | | |
| | | | variable | | | | |
| M12 plug straight | | 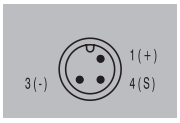  | 1.5 m | 9457790150 | 1925410150 | *** | *** |
| | | | 3.0 m | 9457790300 | 1925410300 | | |
| | | | 5.0 m | 9457790500 | 1925410500 | | |
| | | | 10.0 m | 9457791000 | 1925411000 | | |
| | | | variable | 9457790000 | 1925410000 | | |
| | | 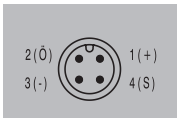  | 1.5 m | *** | *** | 1906410150 | 1925420150 |
| | | | 3.0 m | | | 1906410300 | 1925420300 |
| | | | 5.0 m | | | 1906410500 | 1925420500 |
| | | | 10.0 m | | | 1906411000 | 1925421000 |
| | | | variable | | | 1906410000 | 1925420000 |
| | | 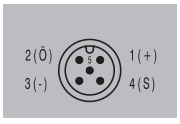  | 1.5 m | *** | *** | *** | *** |
| | | | 3.0 m | | | | |
| | | | 5.0 m | | | | |
| | | | 10.0 m | | | | |
| | | | variable | | | | |
| M12 plug 90° | | 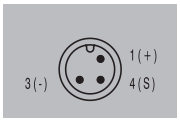  | 1.5 m | On request | On request | *** | *** |
| | | | 3.0 m | | | | |
| | | | 5.0 m | | | | |
| | | | 10.0 m | | | | |
| | | | variable | | | | |
| | | 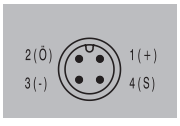  | 1.5 m | *** | *** | On request | On request |
| | | | 3.0 m | | | | |
| | | | 5.0 m | | | | |
| | | | 10.0 m | | | | |
| | | | variable | | | | |
| | | 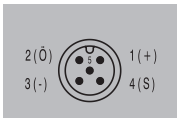  | 1.5 m | *** | *** | *** | *** |
| | | | 3.0 m | | | | |
| | | | 5.0 m | | | | |
| | | | 10.0 m | | | | |
| | | | variable | | | | |

# Sensor cables with plug at one end only

**M12**

**M8**

**M8 Snap connection**

**Twin cabling**

**M5**

## Sensor/actuator cable pre-assembled with M8/M12 plug-in connector at one end

Machine designers frequently require individual cable lengths. Sensor cables, with a connector fitted at one end only, can be easily adapted to the corresponding situation. The cables are available in many different versions: straight, 90° and with all common pole numbers (3.4 and 5).
Male plugs and Female sockets can be assembled to suit individual customer requirements for connecting cables.
The cable sheathing is of PUR (polyurethane) and is suitable for use with cable carrier systems. Plugs and cables are in neutral black.

## Sensor cables

Weidmüller can supply various cable lengths as indicated in the following table:

**Typical cable lengths are:**

- 1.5 m
- 3.0 m
- 5.0 m
- 10.0 m

## Example of designation

Connector at one end only

**SAIL-M8 B G R - 3 S 1.5 U**

L = Metal nut
P = Plastic nut
V = Stainless steel

M12
M8

not specified = Pin
B= Socket

G = straight
W= 90°

for M8 socket
R = Clip
for M8 pin and M12
not specified

3
4
5
No. poles
A-coded

2/4 bridged
(only with M12B)

PB = Profibus DP
CD = CANBUS/
DeviceNet™

Cable length
1.5 m
3.0 m
5.0 m
10 m
X m

Cable
V = PVC-PVC
U = PUR halogen-free
C = PVC-PVC 0.5 mm²
R = PUR-PVC 0.5 mm²
T = resistant to splatter

– = no options
S = shielded (not with PB/CD)
L = LED (only with M8BW 3 + 4 pol./M12BW 3 pol. + 2/4)
-2L = with 2 LEDs
-3L = with 3 LEDs
-3LW = with 3 LEDs (white LED)
only with M12BW 4 pol.

## M12 one end without connector A-coded

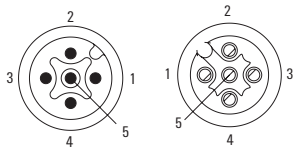


Male Female

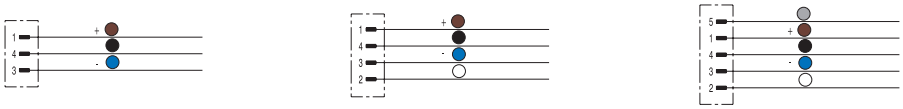

## Ordering data

| Male, straight | | 3-pole Type | 3-pole Order No. | 4-pole Type | 4-pole Order No. | 5-pole Type | 5-pole Order No. |
|---|---|---|---|---|---|---|---|
| PVC | 1.5 m | SAIL-M12G-3-1.5V | 1925430150 | SAIL-M12G-4-1.5V | 1925440150 | SAIL-M12G-5-1.5V | 1925450150 |
| PUR halogen-free | 1.5 m | SAIL-M12G-3-1.5U | 9457810150 | SAIL-M12G-4-1.5U | 9456100150 | SAIL-M12G-5-1.5U | 9457610150 |
| PUR halogen-free yellow | 1.5 m | SAIL-M12G-3-1.5UGE | 1092980150 | SAIL-M12G-4-1.5UGE | 1077750150 | SAIL-M12G-5-1.5UGE | 1092990150 |
| Resistant to welding beads | 1.5 m | SAIL-M12G-3-1.5T | 1021750150 | SAIL-M12G-4-1.5T | 1021770150 | SAIL-M12G-5-1.5T | 1021650150 |
| **Male, angled** | | | | | | | |
| PVC | 1.5 m | SAIL-M12W-3-1.5V | 1925510150 | SAIL-M12W-4-1.5V | 1925520150 | SAIL-M12W-5-1.5V | 1925530150 |
| PUR halogen-free | 1.5 m | SAIL-M12W-3-1.5U | 9456690150 | SAIL-M12W-4-1.5U | 1906260150 | SAIL-M12W-5-1.5U | 9457670150 |
| PUR halogen-free yellow | 1.5 m | SAIL-M12W-3-1.5UGE | 1093160150 | SAIL-M12W-4-1.5UGE | 1093170150 | SAIL-M12W-5-1.5UGE | 1093180150 |
| Resistant to welding beads | 1.5 m | SAIL-M12W-3-1.5T | 1021760150 | SAIL-M12W-4-1.5T | 1021790150 | SAIL-M12W-5-1.5T | 1021660150 |
| **Female, straight** | | | | | | | |
| PVC | 1.5 m | SAIL-M12BG-3-1.5V | 1925570150 | SAIL-M12BG-4-1.5V | 1925580150 | SAIL-M12BG-5-1.5V | 1925590150 |
| PUR halogen-free | 1.5 m | SAIL-M12BG-3-1.5U | 9457820150 | SAIL-M12BG-4-1.5U | 9457730150 | SAIL-M12BG-5-1.5U | 9457910150 |
| PUR halogen-free yellow | 1.5 m | SAIL-M12BG-3-1.5UGE | 1092910150 | SAIL-M12BG-4-1.5UGE | 1092920150 | SAIL-M12BG-5-1.5UGE | 1092930150 |
| Resistant to welding beads | 1.5 m | SAIL-M12BG-3-1.5T | 1968590150 | SAIL-M12BG-4-1.5T | 1968580150 | SAIL-M12BG-5-1.5T | 1021670150 |
| **Female, angled** | | | | | | | |
| PVC | 1.5 m | SAIL-M12BW-3-1.5V | 1925630150 | SAIL-M12BW-4-1.5V | 1925640150 | SAIL-M12BW-5-1.5V | 1925650150 |
| PUR halogen-free | 1.5 m | SAIL-M12BW-3-1.5U | 9457320150 | SAIL-M12BW-4-1.5U | 9457740150 | SAIL-M12BW-5-1.5U | 9457690150 |
| PUR halogen-free yellow | 1.5 m | SAIL-M12BW-3-1.5UGE | 1092940150 | SAIL-M12BW-4-1.5UGE | 1092960150 | SAIL-M12BW-5-1.5UGE | 1092970150 |
| Resistant to welding beads | 1.5 m | SAIL-M12BW-3-1.5T | 1968560150 | SAIL-M12BW-4-1.5T | 1968570150 | SAIL-M12BW-5-1.5T | 1021690150 |
| **Note** | | Other versions on request | | Other versions on request | | Other versions on request | |

## Standard cable lengths

All cables listed under the ordering data have a length of 1.5 metres. The last four ordering digits must be changed when ordering other standard cable lengths.

| | |
|---|---|
| 1.5 m | xxxxxx0150 |
| 3.0 m | xxxxxx0300 |
| 5.0 m | xxxxxx0500 |
| 10.0 m | xxxxxx1000 |

## Technical data

| | |
|---|---|
| Rated current | 4 A |
| Protection degree | IP 65, IP 66, IP 67, IP 68 |
| Core cross-section | 0.34 mm² |
| Contact surface | Gold-plated |
| Temperature range of housing | -25...+85 °C |
| Rated voltage (acc. to VDE standard 0110 ISO group C) | |
| Approvals | cULus; GOSTME25; ROHS |

Chapter W includes additional technical specifications for the cable

## Dimensioned drawing

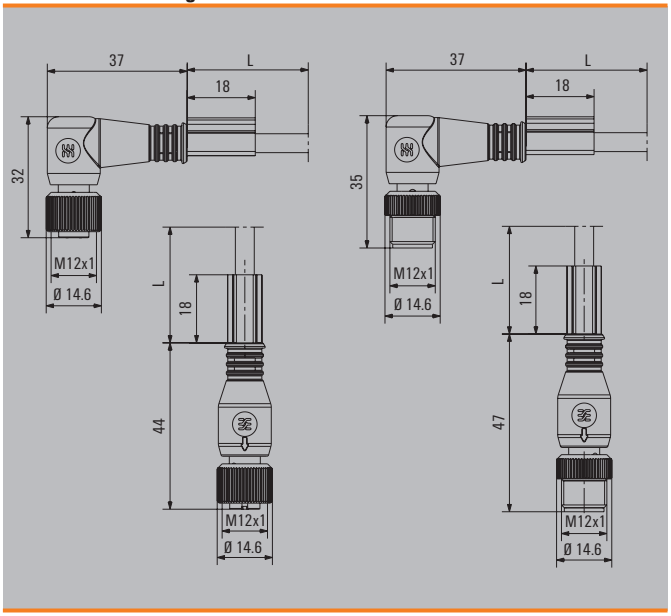

## M12 one end without connector
## A-coded
## with plastic threaded ring

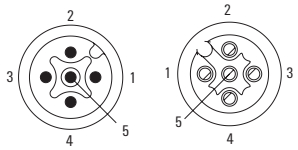


Male Female

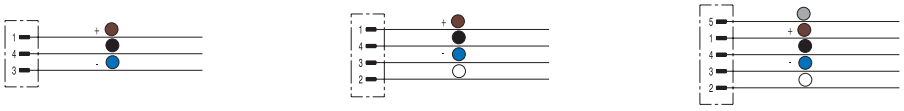

### Ordering data

| | | 3-pole | 4-pole | 5-pole |
|---|---|---|---|---|
| **Male, straight** | | | | |
| PUR halogen-free | 1.5 m | | | |
| **Male, angled** | | | | |
| PUR halogen-free | 1.5 m | | | |
| **Female, straight** | | | | |
| PUR halogen-free | 1.5 m | | | |
| **Female, angled** | | | | |
| PUR halogen-free | 1.5 m | | | |
| **Note** | | | | |

| Type | Order No. | Type | Order No. | Type | Order No. |
|---|---|---|---|---|---|
| SAIP-M12G-3-1.5U | 1108800150 | SAIP-M12G-4-1.5U | 1108810150 | SAIP-M12G-5-1.5U | 1108820150 |
| SAIP-M12W-3-1.5U | 1108670150 | SAIP-M12W-4-1.5U | 1108680150 | SAIP-M12W-5-1.5U | 1108690150 |
| SAIP-M12BG-3-1.5U | 1108730150 | SAIP-M12BG-4-1.5U | 1108740150 | SAIP-M12BG-5-1.5U | 1108750150 |
| SAIP-M12BW-3-1.5U | 1108770150 | SAIP-M12BW-4-1.5U | 1108780150 | SAIP-M12BW-5-1.5U | 1108790150 |

### Standard cable lengths

All cables listed under the ordering data have a length of 1.5 metres. The last four ordering digits must be changed when ordering other standard cable lengths.

| | |
|---|---|
| 1.5 m | xxxxxx0150 |
| 3.0 m | xxxxxx0300 |
| 5.0 m | xxxxxx0500 |
| 10.0 m | xxxxxx1000 |

### Technical data

| | |
|---|---|
| Rated current | 4 A |
| Protection degree | IP 65, IP 66, IP 67, IP 68 |
| Core cross-section | 0.34 mm² |
| Contact surface | Gold-plated |
| Temperature range of housing | -25...+85 °C |
| Rated voltage (acc. to VDE standard 0110 ISO group C) | 250 V (3- and 4-pole) / 125 V (5-pole) |
| Approvals | |

Chapter W includes additional technical specifications for the cable

### Dimensioned drawing

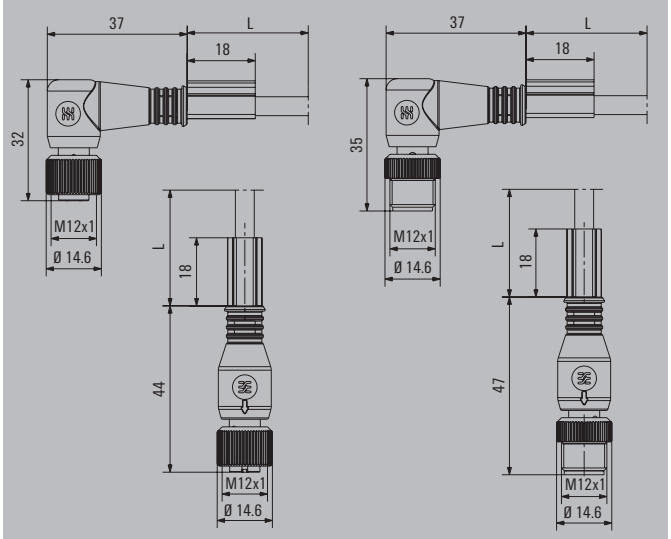

## M12 one end without connector
## A-coded
## with stainless-steel threaded ring
## 1.4404/316L

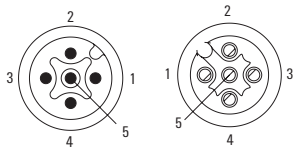


Male Female

### Ordering data

| Female, straight | | 3-pole Type | 3-pole Order No. | 4-pole Type | 4-pole Order No. |
|---|---|---|---|---|---|
| PUR halogen-free | 1.5 m | SAIV-M12BG-2/4-1.5U | 1939410150 | SAIV-M12BG-4-1.5U | 9457950150 |
| **Female, angled** | | | | | |
| PUR halogen-free | 1.5 m | SAIV-M12BW-2/4-1.5U | 1939370150 | SAIV-M12BW-4-1.5U | 9457960150 |
| **Note** | | | | | |

### Standard cable lengths

All cables listed under the ordering data have a length of 1.5 metres. The last four ordering digits must be changed when ordering other standard cable lengths.

| | |
|---|---|
| 1.5 m | xxxxxx0150 |
| 3.0 m | xxxxxx0300 |
| 5.0 m | xxxxxx0500 |
| 10.0 m | xxxxxx1000 |

### Technical data

| | |
|---|---|
| Rated current | 4 A |
| Protection degree | IP 65, IP 66, IP 67, IP 68 |
| Core cross-section | 0.34 mm² |
| Contact surface | Gold-plated |
| Temperature range of housing | -25...+85 °C |
| Rated voltage (acc. to VDE standard 0110 ISO group C) | 250 V |
| Approvals | |

Chapter W includes additional technical specifications for the cable

### Dimensioned drawing

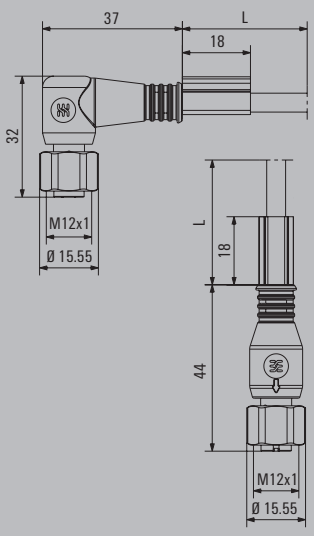

## Sensor cables

### M12 8 / 12-pole
### A-coded

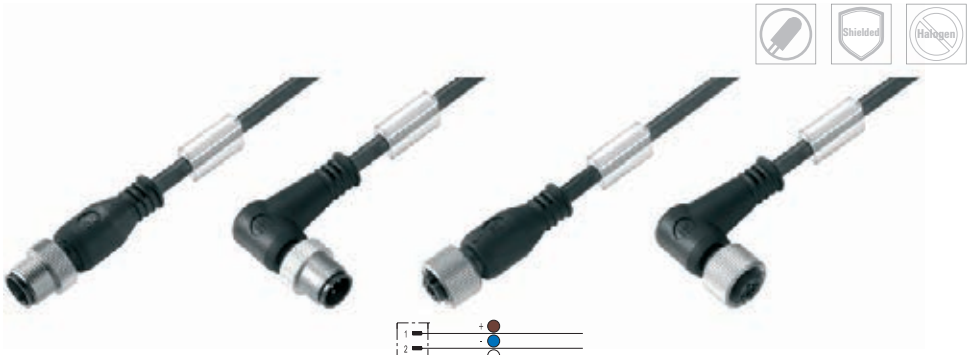


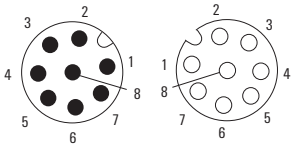


Male Female

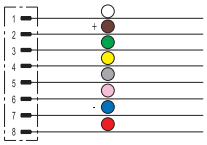

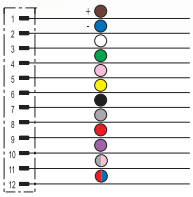

### Ordering data

| | | 8-pole | 12-pole |
|---|---|---|---|
| **Male, straight** | | | |
| PUR halogen-free | 1.5 m | SAIL-M12G-8-1.5U **1279410150** | SAIL-M12G-12-1.5U **1311700150** |
| **Male, angled** | | | |
| PUR halogen-free | 1.5 m | SAIL-M12W-8-1.5U **1279420150** | SAIL-M12W-12-1.5U **1311690150** |
| **Female, straight** | | | |
| PUR halogen-free | 1.5 m | SAIL-M12BG-8-1.5U **1865870150** | SAIL-M12BG-12-1.5U **1879710150** |
| **Female, angled** | | | |
| PUR halogen-free | 1.5 m | SAIL-M12BW-8-1.5U **1883460150** | SAIL-M12BW-12-1.5U **1898240150** |
| **Male, straight - Socket, straight** | | | |
| PUR halogen-free | 1.5 m | SAIL-M12GM12G-8-1.5U **1279440150** | |
| **Male, straight - Socket, angled** | | | |
| PUR halogen-free | 1.5 m | SAIL-M12GM12W-8-1.5U **1279450150** | |
| **Note** | | | |

### Standard cable lengths

All cables listed under the ordering data have a length of 1.5 metres. The last four ordering digits must be changed when ordering other standard cable lengths.

| | |
|---|---|
| 1.5 m | xxxxxx0150 |
| 3.0 m | xxxxxx0300 |
| 5.0 m | xxxxxx0500 |
| 10.0 m | xxxxxx1000 |

### Technical data

| | |
|---|---|
| Rated current | 1 A |
| Protection degree | IP 67, IP 68 |
| Core cross-section | 0.25 mm² |
| Contact surface | Gold-plated |
| Temperature range of housing | -25...+85 °C |
| Rated voltage (acc. to VDE standard 0110 ISO group C) | 30 V |
| Approvals | |

### Dimensioned drawing

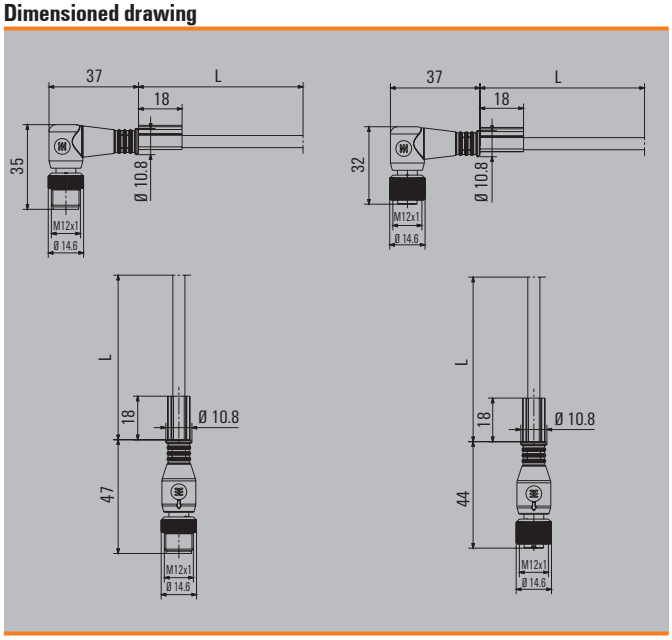

**M12 8-pole**
**A-coded**
**shielded**

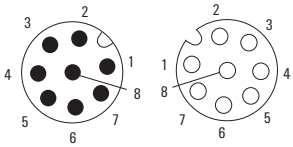


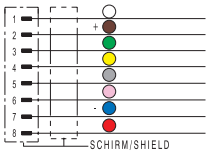


## Ordering data

| | | Type | 8-pole Order No. |
|---|---|---|---|
| **Male, straight** | | | |
| PUR halogen-free | 1.5 m | SAIL-M12G-8S1.5U | **1279430150** |
| **Male, angled** | | | |
| PUR halogen-free | 1.5 m | SAIL-M12W-8S1.5U | **1276060150** |
| **Female, straight** | | | |
| PUR halogen-free | 1.5 m | SAIL-M12BG-8S1.5U | **1890520150** |
| **Female, angled** | | | |
| PUR halogen-free | 1.5 m | SAIL-M12BW-8S1.5U | **1275470150** |
| **Male, straight - Socket, straight** | | | |
| PUR halogen-free | 1.5 m | SAIL-M12GM12G-8S1.5U | **1279460150** |
| **Male, straight - Socket, angled** | | | |
| PUR halogen-free | 1.5 m | SAIL-M12GM12W-8S1.5U | **1279470150** |
| **Note** | | | |

## Standard cable lengths

All cables listed under the ordering data have a length of 1.5 metres. The last four ordering digits must be changed when ordering other standard cable lengths.

| | |
|---|---|
| 1.5 m | xxxxxx0150 |
| 3.0 m | xxxxxx0300 |
| 5.0 m | xxxxxx0500 |
| 10.0 m | xxxxxx1000 |

## Technical data

| | |
|---|---|
| Rated current | 1 A |
| Protection degree | IP 67 |
| Core cross-section | 0.25 mm² |
| Contact surface | Gold-plated |
| Temperature range of housing | -25...+85 °C |
| Rated voltage (acc. to VDE standard 0110 ISO group C) | 30 V |
| Approvals | |

## Dimensioned drawing

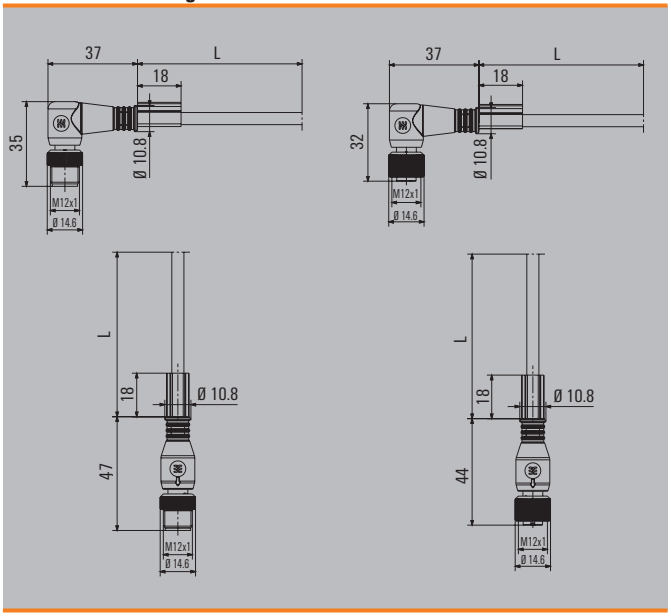

## M12 one end without connector with LED A-coded female, angled

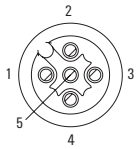


Female

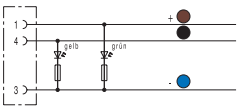


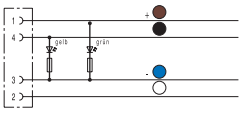


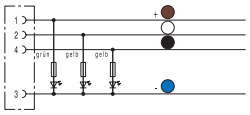


### Ordering data

| Female, angled | |
|---|---|
| PVC | 1.5 m |
| PUR halogen-free | 1.5 m |
| PUR halogen-free yellow | 1.5 m |
| Resistant to welding beads | 1.5 m |
| **Note** | |

| 2 LEDs | 3-pole |
|---|---|
| **Type** | **Order No.** |
| SAIL-M12BW-3L1.5V | 1925460150 |
| SAIL-M12BW-3L1.5U | 9457800150 |
| SAIL-M12BW-3L1.5UGE | 1114880150 |
| SAIL-M12BW-3L1.5T | 1004330150 |

| 2 LEDs | 4-pole |
|---|---|
| **Type** | **Order No.** |
| SAIL-M12BW-4-2L1.5V | 1925470150 |
| SAIL-M12BW-4-2L1.5U | 9456380150 |
| SAIL-M12BW-4-2L1.5UGE | 1092950150 |
| SAIL-M12BW-4-2L1.5T | 1007000150 |

| 3 LEDs | 4-pole |
|---|---|
| **Type** | **Order No.** |
| SAIL-M12BW-4-3L1.5V | 1963960150 |
| SAIL-M12BW-4-3L1.5U | 1963940150 |
| Other versions on request | |

### Standard cable lengths

| | | |
|---|---|---|
| All cables listed under the ordering data have a length of 1.5 metres. The last four ordering digits must be changed when ordering other standard cable lengths. | 1.5 m | xxxxxx0150 |
| | 3.0 m | xxxxxx0300 |
| | 5.0 m | xxxxxx0500 |
| | 10.0 m | xxxxxx1000 |

### Technical data

| | |
|---|---|
| Rated current | 4 A |
| Protection degree | IP 65, IP 66, IP 67, IP 68 |
| Core cross-section | 0.34 mm² |
| Contact surface | Gold-plated |
| Temperature range of housing | -25...+85 °C |
| Rated voltage (acc. to VDE standard 0110 ISO group C) | 250 V (3- and 4-pole) / 125 V (5-pole) |
| Approvals | CSA; cURus; GOSTME25; ROHS |

Chapter W includes additional technical specifications for the cable

### Dimensioned drawing

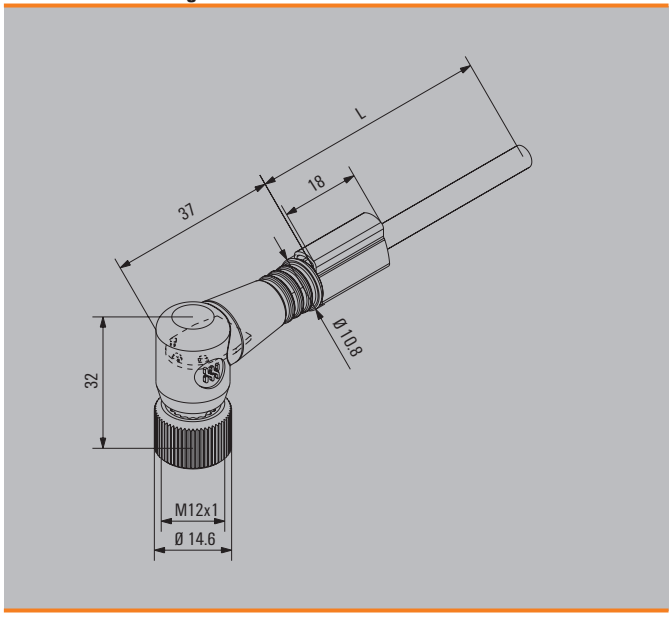

## M12 one end without connector shielded A-coded

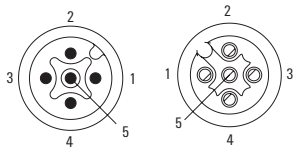


Male Female

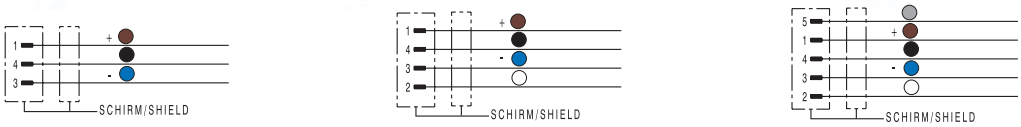


### Ordering data

| | | 3-pole | 4-pole | 5-pole |
|---|---|---|---|---|
| **Male, straight** | | | | |
| PUR halogen-free | 1.5 m | SAIL-M12G-3S1.5U **1906470150** | SAIL-M12G-4S1.5U **1906480150** | SAIL-M12G-5S1.5U **1926690150** |
| **Male, angled** | | | | |
| PUR halogen-free | 1.5 m | SAIL-M12W-3S1.5U **1906500150** | SAIL-M12W-4S1.5U **1059650150** | SAIL-M12W-5S1.5U **1906520150** |
| **Female, straight** | | | | |
| PUR halogen-free | 1.5 m | SAIL-M12BG-3S1.5U **1867410150** | SAIL-M12BG-4S1.5U **1812540150** | SAIL-M12BG-5S1.5U **9456140150** |
| **Female, angled** | | | | |
| PUR halogen-free | 1.5 m | SAIL-M12BW-3S1.5U **1906950150** | SAIL-M12BW-4S1.5U **1808970150** | SAIL-M12BW-5S1.5U **1906540150** |
| **Note** | | Other versions on request | Other versions on request | Other versions on request |

### Standard cable lengths

All cables listed under the ordering data have a length of 1.5 metres. The last four ordering digits must be changed when ordering other standard cable lengths.

| | |
|---|---|
| 1.5 m | xxxxxx0150 |
| 3.0 m | xxxxxx0300 |
| 5.0 m | xxxxxx0500 |
| 10.0 m | xxxxxx1000 |

### Technical data

| | |
|---|---|
| Rated current | 4 A |
| Protection degree | IP 67 |
| Core cross-section | mm² |
| Contact surface | Gold-plated |
| Temperature range of housing | -25...+85 °C |
| Rated voltage (acc. to VDE standard 0110 ISO group C) | 250 V (3- and 4-pole) / 125 V (5-pole) |
| Approvals | cULus; GOSTME25; ROHS |

Chapter W includes additional technical specifications for the cable

### Dimensioned drawing

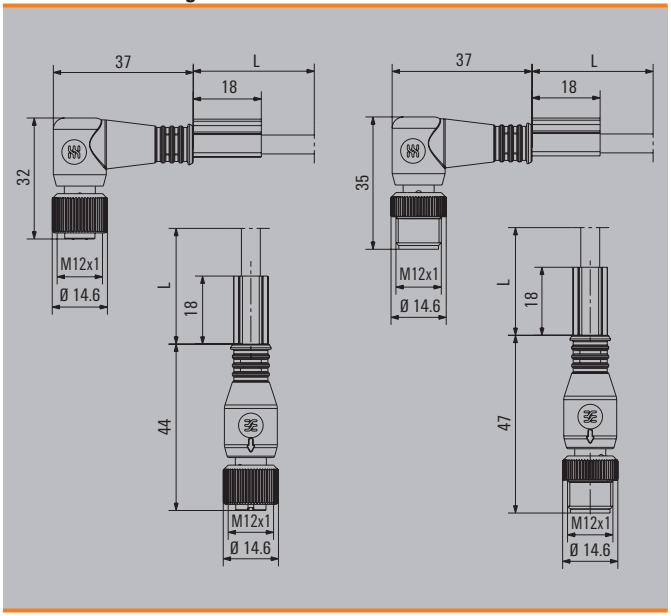

## Sensor cables

### Twin cabling
### M12 one end without connector

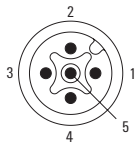


Male

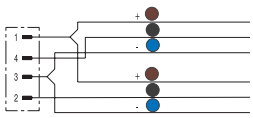


### Ordering data

| Male straight - open ended | | 3-pole | |
|---|---|---|---|
| PUR halogen-free | 1.5 m | Type | Order No. |
| Note | | SAIL-ZW-3-1.5U | 1964310150 |

### Standard cable lengths

| | | |
|---|---|---|
| All cables listed under the ordering data have a length of 1.5 metres. The last four ordering digits must be changed when ordering other standard cable lengths. | 1.5 m | xxxxxx0150 |
| | 3.0 m | xxxxxx0300 |
| | 5.0 m | xxxxxx0500 |
| | 10.0 m | xxxxxx1000 |

### Technical data

| | |
|---|---|
| Rated current | 4 A |
| Protection degree | IP 65, IP 66, IP 67, IP 68 |
| Core cross-section | 0.34 mm² |
| Contact surface | Gold-plated |
| Temperature range of housing | -25...+85 °C |
| Rated voltage (acc. to VDE standard 0110 ISO group C) | 250 V (3- and 4-pole) / 125 V (5-pole) |
| Approvals | CSA; cURus; GOSTME25; ROHS |

Chapter W includes additional technical specifications for the cable

### Dimensioned drawing

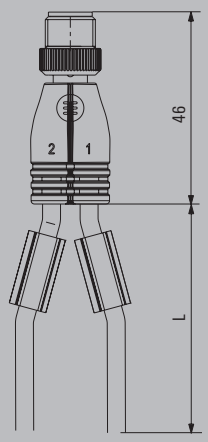

## M8 one end without connector

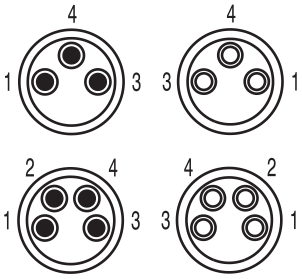


Male Female

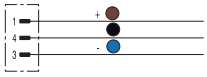

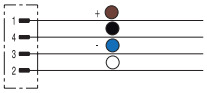

## Ordering data

| Male, straight | | 3-pole Type | 3-pole Order No. | 4-pole Type | 4-pole Order No. |
|---|---|---|---|---|---|
| PVC | 1.5 m | SAIL-M8G-3-1.5V | 1927230150 | SAIL-M8G-4-1.5V | 1927250150 |
| PUR halogen-free | 1.5 m | SAIL-M8G-3-1.5U | 1824590150 | SAIL-M8G-4-1.5U | 1906270150 |
| **Male, angled** | | | | | |
| PVC | 1.5 m | SAIL-M8W-3-1.5V | 1927310150 | SAIL-M8W-4-1.5V | 1927330150 |
| PUR halogen-free | 1.5 m | SAIL-M8W-3-1.5U | 1857550150 | SAIL-M8W-4-1.5U | 1857560150 |
| **Female, straight** | | | | | |
| PVC | 1.5 m | SAIL-M8BG-3-1.5V | 1927240150 | SAIL-M8BG-4-1.5V | 1927260150 |
| PUR halogen-free | 1.5 m | SAIL-M8BG-3-1.5U | 9457450150 | SAIL-M8BG-4-1.5U | 9457850150 |
| PUR halogen-free yellow | 1.5 m | SAIL-M8BG-3-1.5UGE | 1093190150 | SAIL-M8BG-4-1.5UGE | 1093200150 |
| **Female, angled** | | | | | |
| PVC | 1.5 m | SAIL-M8BW-3-1.5V | 1927320150 | SAIL-M8BW-4-1.5V | 1927340150 |
| PUR halogen-free | 1.5 m | SAIL-M8BW-3-1.5U | 9457380150 | SAIL-M8BW-4-1.5U | 9456150150 |
| PUR halogen-free yellow | 1.5 m | SAIL-M8BW-3-1.5UGE | 1093220150 | SAIL-M8BW-4-1.5UGE | 1093240150 |
| **Note** | | | | | |

## Standard cable lengths

All cables listed under the ordering data have a length of 1.5 metres. The last four ordering digits must be changed when ordering other standard cable lengths.

| | |
|---|---|
| 1.5 m | xxxxxx0150 |
| 3.0 m | xxxxxx0300 |
| 5.0 m | xxxxxx0500 |
| 10.0 m | xxxxxx1000 |

## Technical data

| | |
|---|---|
| Rated current | 4 A |
| Protection degree | IP 65, IP 66, IP 67, IP 68 |
| Core cross-section | 0.25 mm² |
| Contact surface | Gold-plated |
| Temperature range of housing | -25...+85 °C |
| Rated voltage (acc. to VDE standard 0110 ISO group C) | 60 V (3-pole) / 30 V (4-pole) |
| Approvals | cURus; GOSTME25; ROHS |

Chapter W includes additional technical specifications for the cable

## Dimensioned drawing

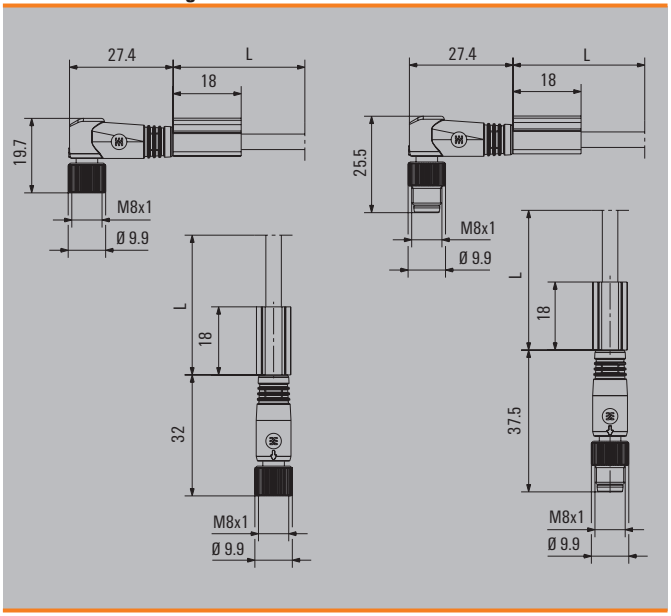

## Sensor cables

### M8 one end without connector snap-on connection

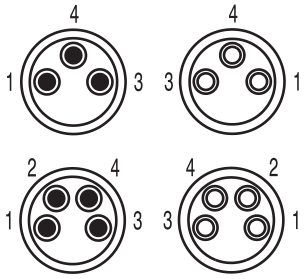


Male Female

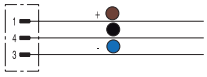

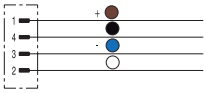

### Ordering data

| Female, straight | | 3-pole Type | 3-pole Order No. | 4-pole Type | 4-pole Order No. |
|---|---|---|---|---|---|
| PVC | 1.5 m | SAIL-M8BGR-3-1.5V | 1948710150 | SAIL-M8BGR-4-1.5V | 1948730150 |
| PUR halogen-free | 1.5 m | SAIL-M8BGR-3-1.5U | 1827020150 | SAIL-M8BGR-4-1.5U | 1948530150 |
| **Female, angled** | | | | | |
| PVC | 1.5 m | SAIL-M8BWR-3-1.5V | 1948720150 | SAIL-M8BWR-4-1.5V | 1948740150 |
| PUR halogen-free | 1.5 m | SAIL-M8BWR-3-1.5U | 1827010150 | SAIL-M8BWR-4-1.5U | 1948540150 |
| **Note** | | Other versions on request | | Other versions on request | |

### Standard cable lengths

| | | |
|---|---|---|
| All cables listed under the ordering data have a length of 1.5 metres. The last four ordering digits must be changed when ordering other standard cable lengths. | 1.5 m | xxxxxx0150 |
| | 3.0 m | xxxxxx0300 |
| | 5.0 m | xxxxxx0500 |
| | 10.0 m | xxxxxx1000 |

### Technical data

| | |
|---|---|
| Rated current | 4 A |
| Protection degree | IP 65 |
| Core cross-section | 0.25 mm² |
| Contact surface | Gold-plated |
| Temperature range of housing | -25...+85 °C |
| Rated voltage (acc. to VDE standard 0110 ISO group C) | 60 V (3-pole) / 30 V (4-pole) |
| Approvals | |

Chapter W includes additional technical specifications for the cable

### Dimensioned drawing

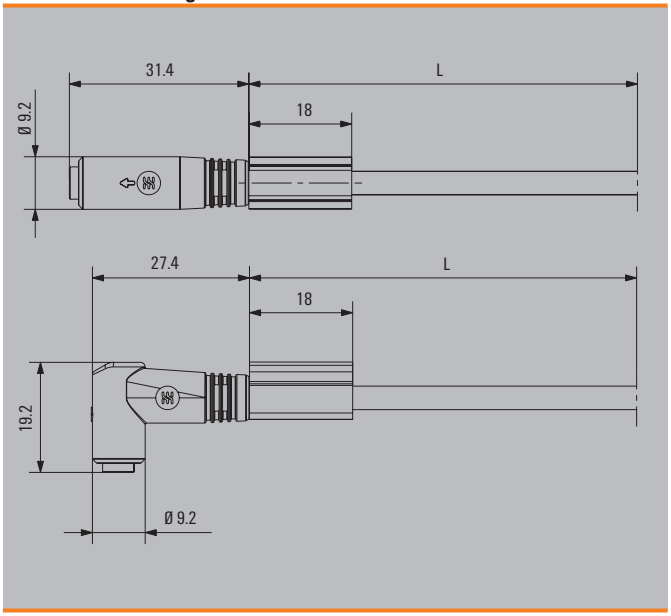

## M8 one end without connector with LED

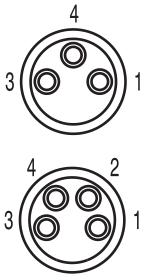


Female

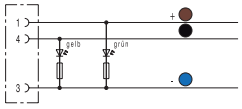

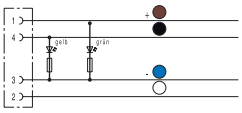


### Ordering data

| Female, angled | | 3-pole Type | 3-pole Order No. | 4-pole Type | 4-pole Order No. |
|---|---|---|---|---|---|
| PVC | 1.5 m | SAIL-M8BW-3L1.5V | 1927350150 | SAIL-M8BW-4L1.5V | 1927360150 |
| PUR halogen-free | 1.5 m | SAIL-M8BW-3L1.5U | 9457460150 | SAIL-M8BW-4L1.5U | 1906400150 |
| PUR halogen-free yellow | 1.5 m | SAIL-M8BW-3L1.5UGE | 1093210150 | SAIL-M8BW-4L1.5UGE | 1093230150 |
| **Note** | | Other versions on request | | Other versions on request | |

### Standard cable lengths

| | | |
|---|---|---|
| All cables listed under the ordering data have a length of 1.5 metres. The last four ordering digits must be changed when ordering other standard cable lengths. | 1.5 m | xxxxxx0150 |
| | 3.0 m | xxxxxx0300 |
| | 5.0 m | xxxxxx0500 |
| | 10.0 m | xxxxxx1000 |

### Technical data

| | |
|---|---|
| Rated current | 4 A |
| Protection degree | IP 65, IP 66, IP 67, IP 68 |
| Core cross-section | 0.25 mm² |
| Contact surface | Gold-plated |
| Temperature range of housing | -25...+85 °C |
| Rated voltage (acc. to VDE standard 0110 ISO group C) | 60 V (3-pole) / 30 V (4-pole) |
| Approvals | CSA; cURus; GOSTME25; ROHS |

Chapter W includes additional technical specifications for the cable

### Dimensioned drawing

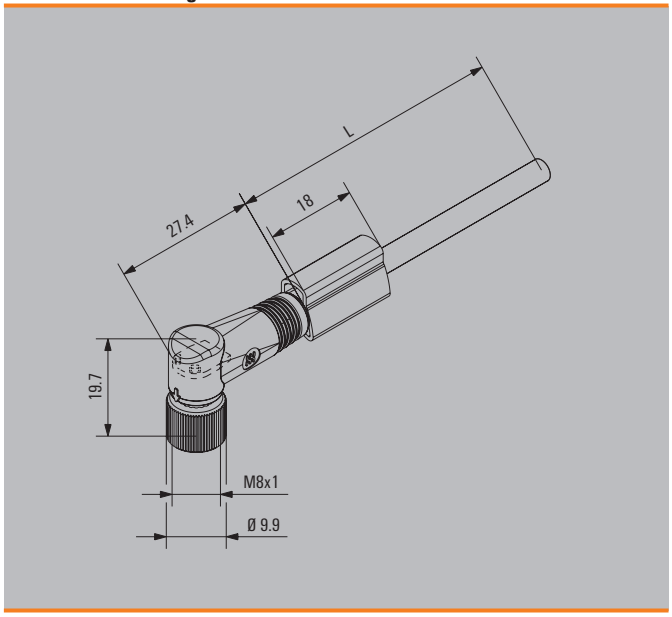

## Sensor cables

### M8 one end without connector shielded

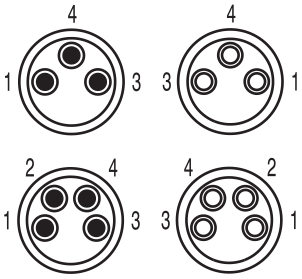


Male Female

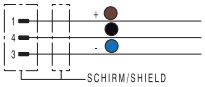


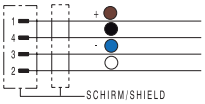


### Ordering data

| | | 3-pole | 4-pole |
|---|---|---|---|
| **Male, straight** | | | |
| PUR halogen-free | 1.5 m | SAIL-M8G-3S1.5U **1906560150** | SAIL-M8G-4S1.5U **1906570150** |
| **Male, angled** | | | |
| PUR halogen-free | 1.5 m | SAIL-M8W-3S1.5U **1906580150** | SAIL-M8W-4S1.5U **1906590150** |
| **Female, straight** | | | |
| PUR halogen-free | 1.5 m | SAIL-M8BG-3S1.5U **1906600150** | SAIL-M8BG-4S1.5U **1906610150** |
| **Female, angled** | | | |
| PUR halogen-free | 1.5 m | SAIL-M8BW-3S1.5U **1906620150** | SAIL-M8BW-4S1.5U **1906630150** |
| **Note** | | Other versions on request | Other versions on request |

### Standard cable lengths

All cables listed under the ordering data have a length of 1.5 metres. The last four ordering digits must be changed when ordering other standard cable lengths.

| | |
|---|---|
| 1.5 m | xxxxxx0150 |
| 3.0 m | xxxxxx0300 |
| 5.0 m | xxxxxx0500 |
| 10.0 m | xxxxxx1000 |

### Technical data

| | |
|---|---|
| Rated current | 4 A |
| Protection degree | IP 67 |
| Core cross-section | 0.34 mm² |
| Contact surface | Gold-plated |
| Temperature range of housing | -25...+85 °C |
| Rated voltage (acc. to VDE standard 0110 ISO group C) | 60 V (3-pole) / 30 V (4-pole) |
| Approvals | |

Chapter W includes additional technical specifications for the cable

### Dimensioned drawing

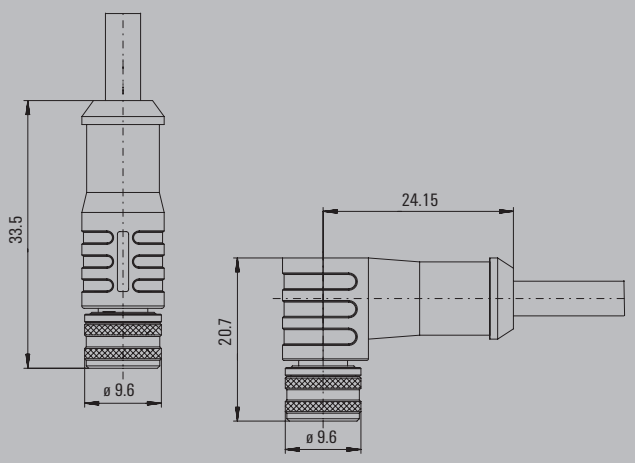

## M5 one end without connector

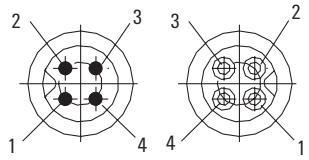


Male Female

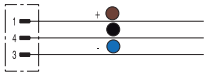


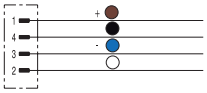

### Ordering data

| Type | Length | 3-pole Order No. | 4-pole Type | 4-pole Order No. |
|---|---|---|---|---|
| **Male, straight** | | | | |
| PUR halogen-free | 1.5 m | **1854060150** | SAIL-M5G-4P-1.5U | **1871700150** |
| **Male, angled** | | | | |
| PUR halogen-free | 1.5 m | **1873280150** | SAIL-M5W-4P-1.5U | **1873240150** |
| **Female, straight** | | | | |
| PUR halogen-free | 1.5 m | **1873290150** | SAIL-M5BG-4P-1.5U | **1873250150** |
| **Female, angled** | | | | |
| PUR halogen-free | 1.5 m | **1873260150** | SAIL-M5BW-4P-1.5U | **1873270150** |
| **Note** | | Other versions on request | Other versions on request | |

### Standard cable lengths

| | | |
|---|---|---|
| All cables listed under the ordering data have a length of 1.5 metres. The last four ordering digits must be changed when ordering other standard cable lengths. | 1.5 m | xxxxxx0150 |
| | 3.0 m | xxxxxx0300 |
| | 5.0 m | xxxxxx0500 |
| | 10.0 m | xxxxxx1000 |

### Technical data

| | |
|---|---|
| Rated current | 1 A |
| Protection degree | IP 67 |
| Core cross-section | 0.25 mm² |
| Contact surface | Gold-plated |
| Temperature range of housing | -25...+85 °C |
| Rated voltage (acc. to VDE standard 0110 ISO group C) | 60 V |
| Approvals | |

Chapter W includes additional technical specifications for the cable

### Dimensioned drawing

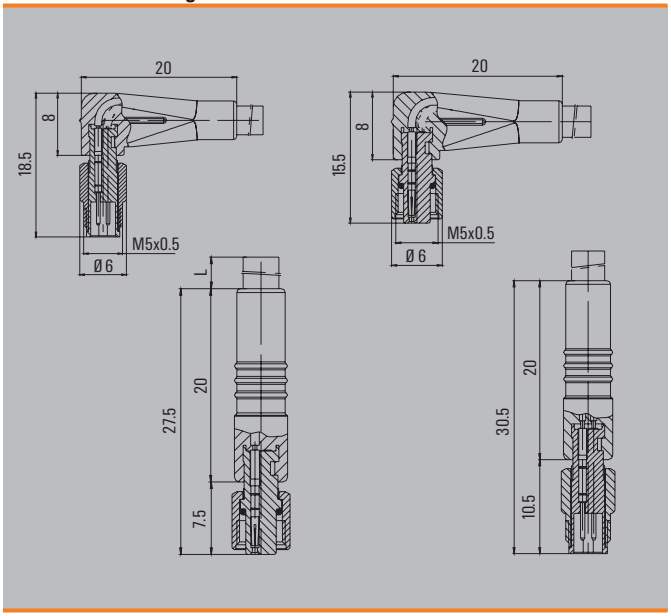

# Connecting cables

### M12

### M8

### M8 Snap connection

### Twin cabling

Many applications with sensors require suitable connecting cables. The connecting cables are available in different designs.
The M12/M8 plug-in connectors are available in straight and 90° versions and also with LEDs.

- When plugged in, the M12 connecting cables comply with IP 68 ingress protection class.
- The cable sheathing is black and made of polyurethane (PUR or PVC).
- The connecting cables are supplied with two marking sleeves.

Corresponding tags TM-I 18 for the marking sleeves can be found in chapter I.

### Sensor cables

Weidmüller can supply various cable lengths as indicated in the following table:

**Typical cable lengths are:**

| | | | |
|---|---|---|---|
| • 1.5 m | • 3.0 m | • 5.0 m | • 10.0 m |

### Example of designation

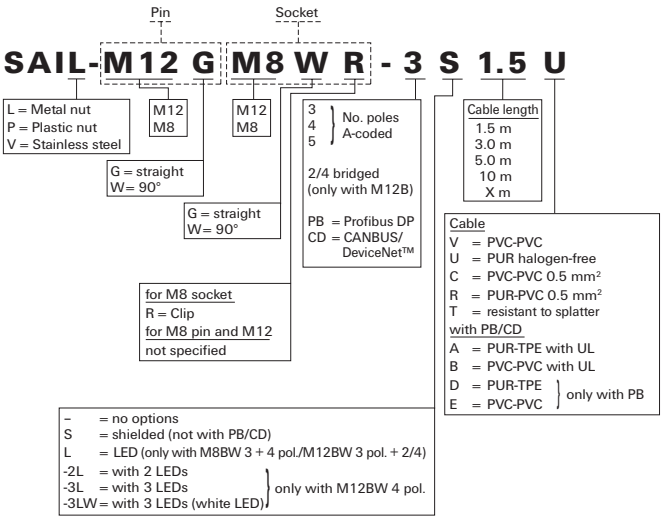

## Connecting cables
## M12 to M12
## A-coded

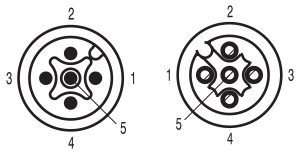


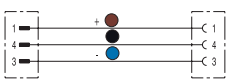

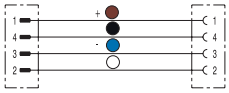

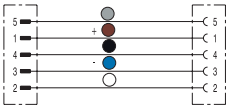

## Ordering data

| Male, straight - Female, straight | | 3-pole Type | 3-pole Order No. | 4-pole Type | 4-pole Order No. | 5-pole Type | 5-pole Order No. |
|---|---|---|---|---|---|---|---|
| PVC | 1.5 m | SAIL-M12GM12G-3-1.5V | 1925300150 | SAIL-M12GM12G-4-1.5V | 1925310150 | SAIL-M12GM12G-5-1.5V | 1925320150 |
| PUR halogen-free | 1.5 m | SAIL-M12GM12G-3-1.5U | 9457230150 | SAIL-M12GM12G-4-1.5U | 1906300150 | SAIL-M12GM12G-5-1.5U | 9457340150 |
| PUR halogen-free yellow | 1.5 m | SAIL-M12GM12G-3-1.5UGE | 1093010150 | SAIL-M12GM12G-4-1.5UGE | 1093020150 | SAIL-M12GM12G-5-1.5UGE | 1093030150 |
| Resistant to welding beads | 1.5 m | SAIL-M12GM12G-3-1.5T | 1021710150 | SAIL-M12GM12G-4-1.5T | 1021730150 | SAIL-M12GM12G-5-1.5T | 1011970150 |
| **Male, straight - Female, angled** | | | | | | | |
| PVC | 1.5 m | SAIL-M12GM12W-3-1.5V | 1925340150 | SAIL-M12GM12W-4-1.5V | 1925350150 | SAIL-M12GM12W-5-1.5V | 1925360150 |
| PUR halogen-free | 1.5 m | SAIL-M12GM12W-3-1.5U | 9457390150 | SAIL-M12GM12W-4-1.5U | 9457310150 | SAIL-M12GM12W-5-1.5U | 9457270150 |
| PUR halogen-free yellow | 1.5 m | SAIL-M12GM12W-3-1.5UGE | 1093050150 | SAIL-M12GM12W-4-1.5UGE | 1093070150 | SAIL-M12GM12W-5-1.5UGE | 1093080150 |
| Resistant to welding beads | 1.5 m | SAIL-M12GM12W-3-1.5T | 1021720150 | SAIL-M12GM12W-4-1.5T | 1021740150 | SAIL-M12GM12W-5-1.5T | 1011990150 |
| **Male, angled - Female, angled** | | | | | | | |
| PVC | 1.5 m | SAIL-M12WM12W-3-1.5V | 1925380150 | SAIL-M12WM12W-4-1.5V | 1925390150 | SAIL-M12WM12W-5-1.5V | 1925400150 |
| PUR halogen-free | 1.5 m | SAIL-M12WM12W-3-1.5U | 1815670150 | SAIL-M12WM12W-4-1.5U | 1906310150 | SAIL-M12WM12W-5-1.5U | 9457900150 |
| **Note** | | Other versions on request | | Other versions on request | | Other versions on request | |

## Standard cable lengths

| | | |
|---|---|---|
| All cables listed under the ordering data have a length of 1.5 metres. The last four ordering digits must be changed when ordering other standard cable lengths. | 1.5 m | xxxxxx0150 |
| | 3.0 m | xxxxxx0300 |
| | 5.0 m | xxxxxx0500 |
| | 10.0 m | xxxxxx1000 |

## Technical data

| | |
|---|---|
| Rated current | 4 A |
| Protection degree | IP 65, IP 66, IP 67, IP 68 |
| Core cross-section | 0.34 mm² |
| Contact surface | Gold-plated |
| Temperature range of housing | -25...+85 °C |
| Rated voltage (acc. to VDE standard 0110 ISO group C) | 250 V (3- and 4-pole) / 125 V (5-pole) |
| Approvals | cULus; GOSTME25; ROHS |

Chapter W includes additional technical specifications for the cable

## Dimensioned drawing

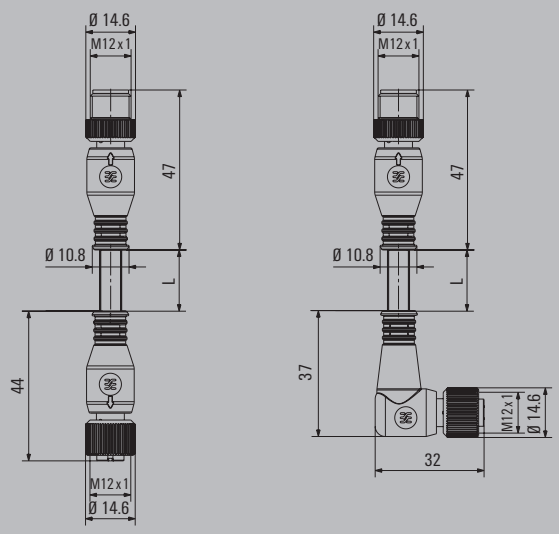

## Connecting cables
## M12 to M12
## A-coded
## Bridged between pins 2 and 4

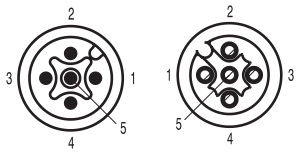


Male Female

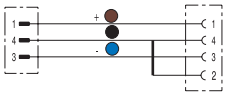


### Ordering data

| Male, straight - Female, straight | | Type | 3-pole Order No. |
|---|---|---|---|
| PVC | 1.5 m | SAIL-M12GM12G-2/4-1.5V | 1925330150 |
| PUR halogen-free | 1.5 m | SAIL-M12GM12G-2/4-1.5U | 9456990150 |
| PUR halogen-free yellow | 1.5 m | SAIL-M12GM12G-2/4-1.5UGE | 1093000150 |
| **Male, straight - Female, angled** | | | |
| PVC | 1.5 m | SAIL-M12GM12W-2/4-1.5V | 1925370150 |
| PUR halogen-free | 1.5 m | SAIL-M12GM12W-2/4-1.5U | 9457890150 |
| PUR halogen-free yellow | 1.5 m | SAIL-M12GM12W-2/4-1.5UGE | 1093040150 |
| **Note** | | | |

### Standard cable lengths

All cables listed under the ordering data have a length of 1.5 metres. The last four ordering digits must be changed when ordering other standard cable lengths.

| | |
|---|---|
| 1.5 m | xxxxxx0150 |
| 3.0 m | xxxxxx0300 |
| 5.0 m | xxxxxx0500 |
| 10.0 m | xxxxxx1000 |

### Technical data

| | |
|---|---|
| Rated current | 4 A |
| Protection degree | IP 65, IP 66, IP 67, IP 68 |
| Core cross-section | 0.34 mm² |
| Contact surface | Gold-plated |
| Temperature range of housing | -25...+85 °C |
| Rated voltage (acc. to VDE standard 0110 ISO group C) | 250 V (3- and 4-pole) / 125 V (5-pole) |
| Approvals | cULus; GOSTME25; ROHS |

Chapter W includes additional technical specifications for the cable

### Dimensioned drawing

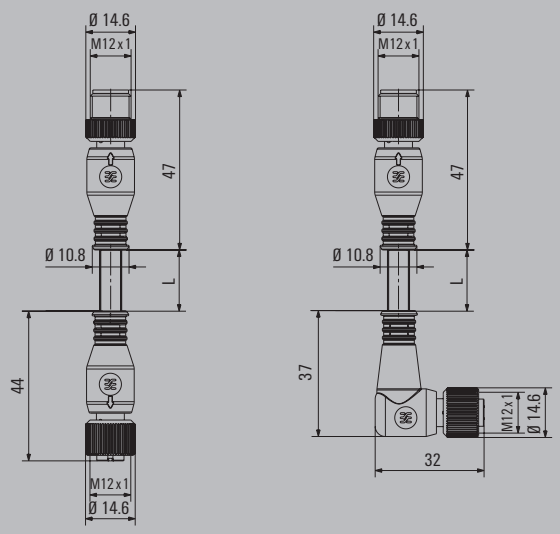

## Connecting cables
## M12 to M12, LED
## A-coded
## male, straight - female, angled

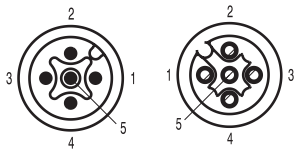


Male Female

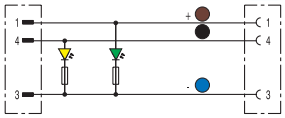

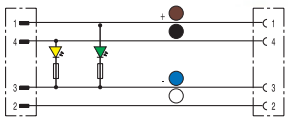

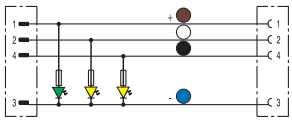

### Ordering data

| Male, straight - Female, angled | | 2 LEDs 3-pole | | 2 LEDs 4-pole | | 3 LEDs 4-pole | |
|---|---|---|---|---|---|---|---|
| | | Type | Order No. | Type | Order No. | Type | Order No. |
| PVC | 1.5 m | SAIL-M12GM12W-3L1.5V | 1925410150 | SAIL-M12GM12W-4-2L1.5V | 1925420150 | SAIL-M12GM12W-4-3L1.5V | 1963930150 |
| PUR halogen-free | 1.5 m | SAIL-M12GM12W-3L1.5U | 9457790150 | SAIL-M12GM12W-4-2L1.5U | 1906410150 | SAIL-M12GM12W-4-3L1.5U | 1963910150 |
| PUR halogen-free yellow | 1.5 m | | | | | SAIL-M12GM12W-4-3LW1.5UGE | 1093060150 |
| Resistant to welding beads | 1.5 m | SAIL-M12GM12W-3L1.5T | 1004320150 | SAIL-M12GM12W-4-2L1.5T | 1004310150 | SAIL-M12GM12W-4-3LW1.5T | 1020930150 |
| Note | | Other versions on request | | Other versions on request | | Other versions on request | |

### Standard cable lengths

| | | |
|---|---|---|
| All cables listed under the ordering data have a length of 1.5 metres. The last four ordering digits must be changed when ordering other standard cable lengths. | 1.5 m | xxxxxx0150 |
| | 3.0 m | xxxxxx0300 |
| | 5.0 m | xxxxxx0500 |
| | 10.0 m | xxxxxx1000 |

### Technical data

| | |
|---|---|
| Rated current | 4 A |
| Protection degree | IP 65, IP 66, IP 67, IP 68 |
| Core cross-section | 0.34 mm² |
| Contact surface | Gold-plated |
| Temperature range of housing | -25...+85 °C |
| Rated voltage (acc. to VDE standard 0110 ISO group C) | 250 V (3- and 4-pole) / 125 V (5-pole) |
| Approvals | cURus; GOSTME25; ROHS |

Chapter W includes additional technical specifications for the cable

### Dimensioned drawing

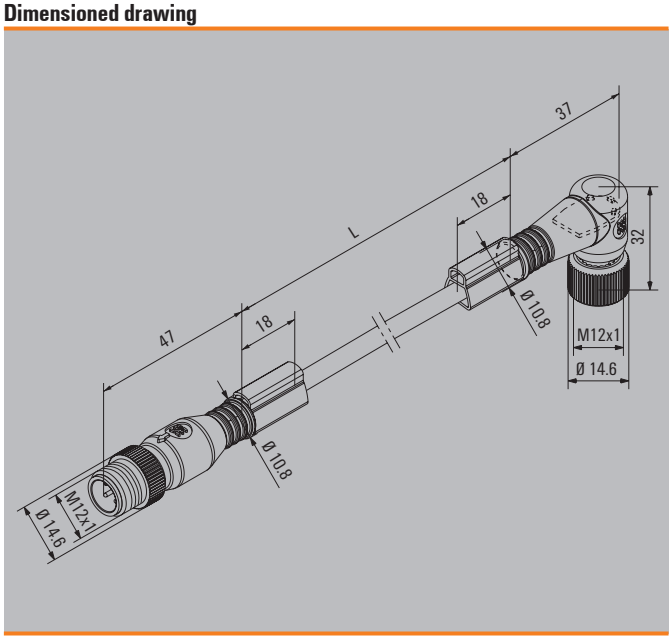

## Connecting cables
## M12 to M12
## A-coded
## shielded

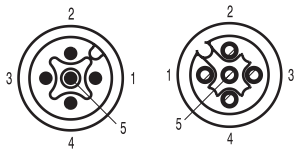


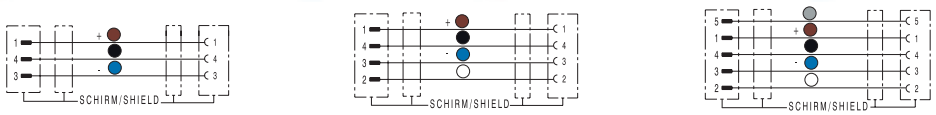


### Ordering data

| Male, straight - Female, straight | | 3-pole | 4-pole | 5-pole |
|---|---|---|---|---|
| PUR halogen-free | 1.5 m | | | |
| **Type** | | **Order No.** | **Order No.** | **Order No.** |
| | | SAIL-M12GM12G-3S1.5U **1058490150** | SAIL-M12GM12G-4S1.5U **1058500150** | SAIL-M12GM12G-5S1.5U **1058510150** |
| **Male, straight - Female, angled** | | | | |
| PUR halogen-free | 1.5 m | | | |
| | | SAIL-M12GM12W-3S1.5U **1059470150** | SAIL-M12GM12W-4S1.5U **1059480150** | SAIL-M12GM12W-5S1.5U **1059540150** |
| **Male, angled - Female, angled** | | | | |
| PUR halogen-free | 1.5 m | | | |
| | | SAIL-M12WM12W-3S1.5U **1059720150** | SAIL-M12WM12W-4S1.5U **1059730150** | SAIL-M12WM12W-5S1.5U **1059740150** |
| **Note** | | Other versions on request | Other versions on request | Other versions on request |

### Standard cable lengths

All cables listed under the ordering data have a length of 1.5 metres. The last four ordering digits must be changed when ordering other standard cable lengths.

| | |
|---|---|
| 1.5 m | xxxxxx0150 |
| 3.0 m | xxxxxx0300 |
| 5.0 m | xxxxxx0500 |
| 10.0 m | xxxxxx1000 |

### Technical data

| | |
|---|---|
| Rated current | 4 A |
| Protection degree | IP 67 |
| Core cross-section | 0.34 mm² |
| Contact surface | Gold-plated |
| Temperature range of housing | -25...+85 °C |
| Rated voltage (acc. to VDE standard 0110 ISO group C) | 250 V (3- and 4-pole) / 125 V (5-pole) |
| Approvals | cULus; GOSTME25; ROHS |

Chapter W includes additional technical specifications for the cable

### Dimensioned drawing

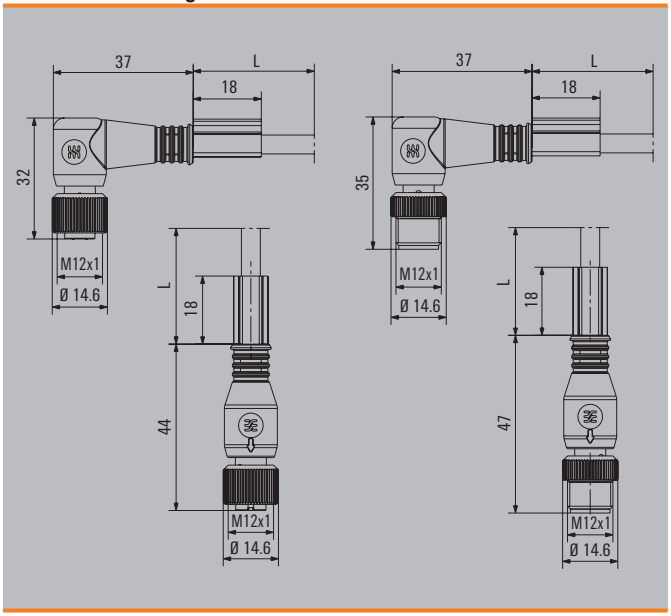

## Connecting cables
## M12 to M8

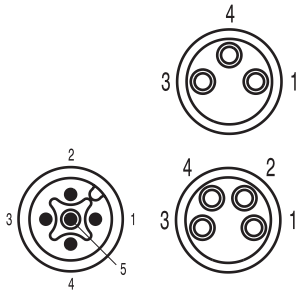


Male Female

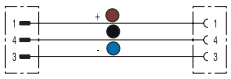


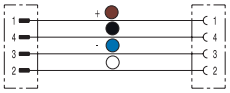


## Ordering data

| | | 3-pole | 4-pole |
|---|---|---|---|
| **Type** | | **Order No.** | **Order No.** |
| **Male, straight - Female, straight** | | | |
| PVC | 1.5 m | 1938170150 | 1938200150 |
| PUR halogen-free | 1.5 m | 9457770150 | 9456660150 |
| **Male, straight - Female, angled** | | | |
| PVC | 1.5 m | 1938180150 | 1938210150 |
| PUR halogen-free | 1.5 m | 9457980150 | 9456670150 |
| **Male, angled - Female, angled** | | | |
| PVC | 1.5 m | 1938190150 | 1938220150 |
| PUR halogen-free | 1.5 m | 1906330150 | 1906340150 |
| **Note** | | Other versions on request | Other versions on request |

## Standard cable lengths

| | | |
|---|---|---|
| All cables listed under the ordering data have a length of 1.5 metres. The last four ordering digits must be changed when ordering other standard cable lengths. | 1.5 m | xxxxxx0150 |
| | 3.0 m | xxxxxx0300 |
| | 5.0 m | xxxxxx0500 |
| | 10.0 m | xxxxxx1000 |

## Technical data

| | |
|---|---|
| Rated current | 4 A |
| Protection degree | IP 65, IP 66, IP 67, IP 68 |
| Core cross-section | 0.25 mm² |
| Contact surface | Gold-plated |
| Temperature range of housing | -25...+85 °C |
| Rated voltage (acc. to VDE standard 0110 ISO group C) | 60 V (3-pole) / 30 V (4-pole) |
| Approvals | cURus; GOSTME25; ROHS |

Chapter W includes additional technical specifications for the cable

## Dimensioned drawing

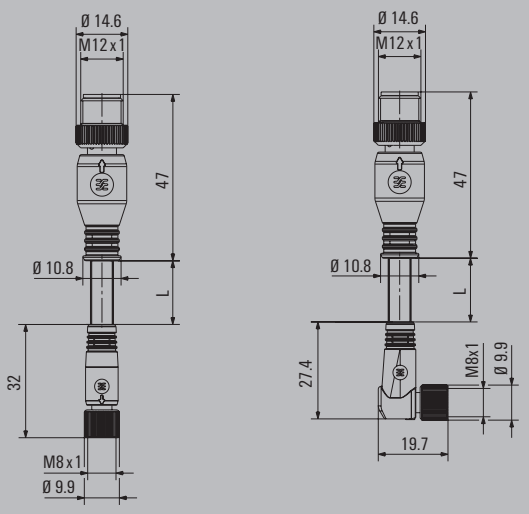

## Connecting cables
## M12 to M8
### snap-on connection

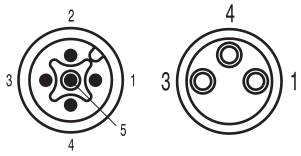


Male Female

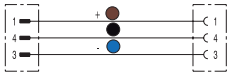


### Ordering data

| Male, straight - Female, straight | | | 3-pole |
|---|---|---|---|
| PUR halogen-free | 1.5 m | SAIL-M12GM8GR-3-1.5U | 1984530150 |
| **Male, straight - Female, angled** | | | |
| PUR halogen-free | 1.5 m | SAIL-M12GM8WR-3-1.5U | 9457570150 |
| PUR halogen-free yellow | 1.5 m | SAIL-M12GM8WR-3-1.5UGE | 1093150150 |
| **Note** | | Other versions on request | |

### Standard cable lengths

| | | |
|---|---|---|
| All cables listed under the ordering data have a length of 1.5 metres. The last four ordering digits must be changed when ordering other standard cable lengths. | 1.5 m | xxxxxx0150 |
| | 3.0 m | xxxxxx0300 |
| | 5.0 m | xxxxxx0500 |
| | 10.0 m | xxxxxx1000 |

### Technical data

| | |
|---|---|
| Rated current | 4 A |
| Protection degree | IP 65, IP 66, IP 67, IP 68 |
| Core cross-section | 0.25 mm² |
| Contact surface | Gold-plated |
| Temperature range of housing | -25...+85 °C |
| Rated voltage (acc. to VDE standard 0110 ISO group C) | 60 V (3-pole) / 30 V (4-pole) |
| Approvals | |

Chapter W includes additional technical specifications for the cable

### Dimensioned drawing

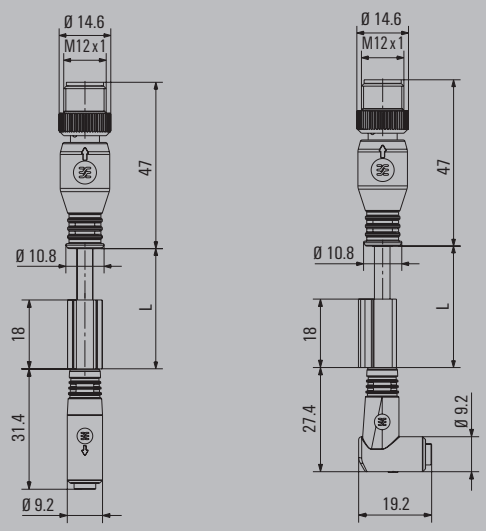

## Connecting cables
## M12 to M8 LED

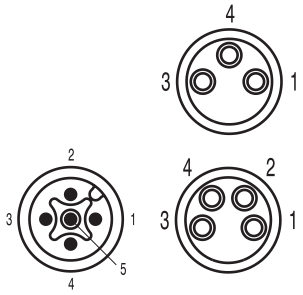


Male Female

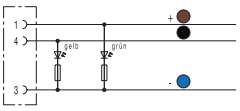


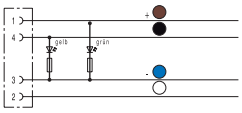


### Ordering data

| Male, straight - Female, angled | | 2 LEDs 3-pole Type | Order No. | 2 LEDs 4-pole Type | Order No. |
|---|---|---|---|---|---|
| PVC | 1.5 m | SAIL-M12GM8W-3L1.5V | 1962290150 | SAIL-M12GM8W-4L1.5V | 1962300150 |
| PUR halogen-free | 1.5 m | SAIL-M12GM8W-3L1.5U | 9457760150 | SAIL-M12GM8W-4L1.5U | 1906430150 |
| PUR halogen-free yellow | 1.5 m | SAIL-M12GM8W-3L1.5UGE | 1093110150 | SAIL-M12GM8W-4L1.5UGE | 1093130150 |
| Note | | | | | |

### Standard cable lengths

| | | |
|---|---|---|
| All cables listed under the ordering data have a length of 1.5 metres. The last four ordering digits must be changed when ordering other standard cable lengths. | 1.5 m | xxxxxx0150 |
| | 3.0 m | xxxxxx0300 |
| | 5.0 m | xxxxxx0500 |
| | 10.0 m | xxxxxx1000 |

### Technical data

| | |
|---|---|
| Rated current | 4 A |
| Protection degree | IP 65, IP 66, IP 67, IP 68 |
| Core cross-section | 0.25 mm² |
| Contact surface | Gold-plated |
| Temperature range of housing | -25...+85 °C |
| Rated voltage (acc. to VDE standard 0110 ISO group C) | 60 V (3-pole) / 30 V (4-pole) |
| Approvals | cURus; GOSTME25; ROHS |

Chapter W includes additional technical specifications for the cable

### Dimensioned drawing

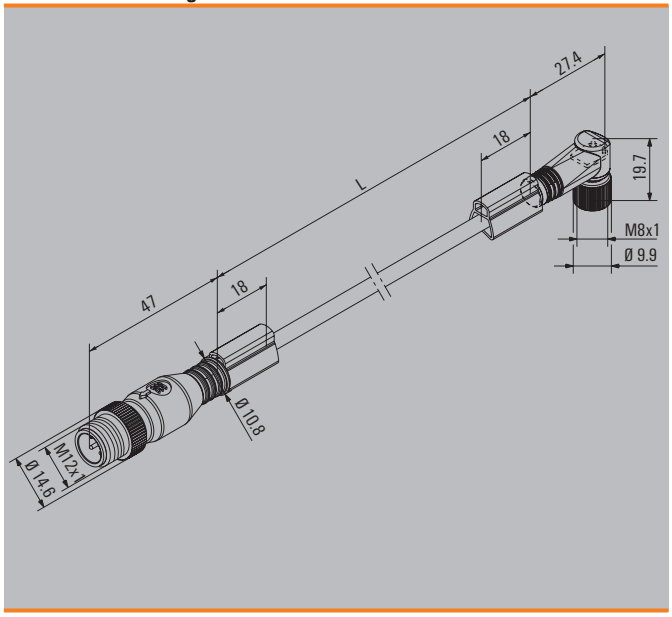

## Sensor cables

### Connecting cables
### M8 to M8

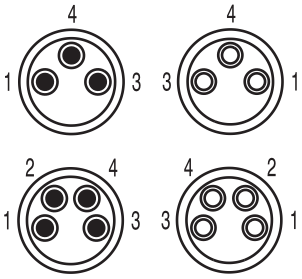


Male Female

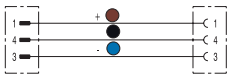

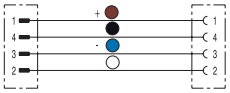

### Ordering data

| Type | | 3-pole Order No. | 4-pole Type | 4-pole Order No. |
|---|---|---|---|---|
| **Male, straight - Female, straight** | | | | |
| PVC | 1.5 m | SAIL-M8GM8G-3-1.5V **1927150150** | SAIL-M8GM8G-4-1.5V | **1927160150** |
| PUR halogen-free | 1.5 m | SAIL-M8GM8G-3-1.5U **1824570150** | SAIL-M8GM8G-4-1.5U | **1880470150** |
| PUR halogen-free yellow | 1.5 m | SAIL-M8GM8G-3-1.5UGE **1104470150** | | |
| **Male, straight - Female, angled** | | | | |
| PVC | 1.5 m | SAIL-M8GM8W-3-1.5V **1927170150** | SAIL-M8GM8W-4-1.5V | **1927180150** |
| PUR halogen-free | 1.5 m | SAIL-M8GM8W-3-1.5U **1824580150** | SAIL-M8GM8W-4-1.5U | **1857660150** |
| **Male, angled - Female, angled** | | | | |
| PVC | 1.5 m | SAIL-M8WM8W-3-1.5V **1927210150** | SAIL-M8WM8W-4-1.5V | **1927220150** |
| PUR halogen-free | 1.5 m | SAIL-M8WM8W-3-1.5U **1857670150** | SAIL-M8WM8W-4-1.5U | **1857680150** |
| **Note** | | | Other versions on request | |

### Standard cable lengths

| | | |
|---|---|---|
| All cables listed under the ordering data have a length of 1.5 metres. The last four ordering digits must be changed when ordering other standard cable lengths. | 1.5 m | xxxxxx0150 |
| | 3.0 m | xxxxxx0300 |
| | 5.0 m | xxxxxx0500 |
| | 10.0 m | xxxxxx1000 |

### Technical data

| | |
|---|---|
| Rated current | 4 A |
| Protection degree | IP 67 |
| Core cross-section | 0.25 mm² |
| Contact surface | Gold-plated |
| Temperature range of housing | -25...+85 °C |
| Rated voltage (acc. to VDE standard 0110 ISO group C) | 60 V (3-pole) / 30 V (4-pole) |
| Approvals | cURus; GOSTME25; ROHS |

Chapter W includes additional technical specifications for the cable

### Dimensioned drawing

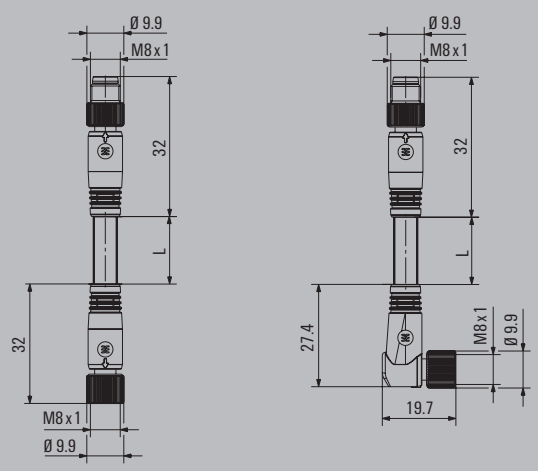

## Connecting cables
## M8 to M8
### snap-on connection

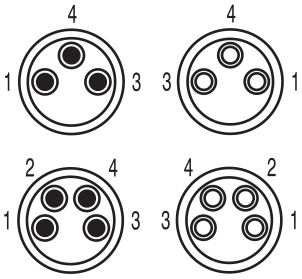


Male Female

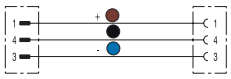


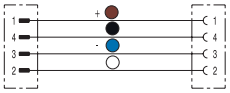


## Ordering data

| Type | | 3-pole Order No. | Type | 4-pole Order No. |
|---|---|---|---|---|
| **Male, straight - Female, straight** | | | | |
| PVC | 1.5 m | | | |
| PUR halogen-free | 1.5 m | | | |
| **Male, straight - Female, angled** | | | | |
| PVC | 1.5 m | SAIL-M8GM8GR-3-1.5V | **1948650150** | SAIL-M8GM8GR-4-1.5V **1948680150** |
| PUR halogen-free | 1.5 m | SAIL-M8GM8GR-3-1.5U | **1948470150** | SAIL-M8GM8GR-4-1.5U **1948500150** |
| **Male, angled - Female, angled** | | | | |
| PVC | 1.5 m | SAIL-M8GM8WR-3-1.5V | **1948660150** | SAIL-M8GM8WR-4-1.5V **1948690150** |
| PUR halogen-free | 1.5 m | SAIL-M8GM8WR-3-1.5U | **1948480150** | SAIL-M8GM8WR-4-1.5U **1948510150** |
| **Note** | | SAIL-M8WM8WR-3-1.5V | **1948670150** | SAIL-M8WM8WR-4-1.5V **1948700150** |
| | | SAIL-M8WM8WR-3-1.5U | **1948490150** | SAIL-M8WM8WR-4-1.5U **1948520150** |
| | | Other versions on request | | Other versions on request |

## Standard cable lengths

All cables listed under the ordering data have a length of 1.5 metres. The last four ordering digits must be changed when ordering other standard cable lengths.

| | |
|---|---|
| 1.5 m | xxxxxx0150 |
| 3.0 m | xxxxxx0300 |
| 5.0 m | xxxxxx0500 |
| 10.0 m | xxxxxx1000 |

## Technical data

| | |
|---|---|
| Rated current | 4 A |
| Protection degree | IP 65 |
| Core cross-section | 0.25 mm² |
| Contact surface | Gold-plated |
| Temperature range of housing | -25...+85 °C |
| Rated voltage (acc. to VDE standard 0110 ISO group C) | 60 V (3-pole) / 30 V (4-pole) |
| Approvals | |

Chapter W includes additional technical specifications for the cable

## Dimensioned drawing

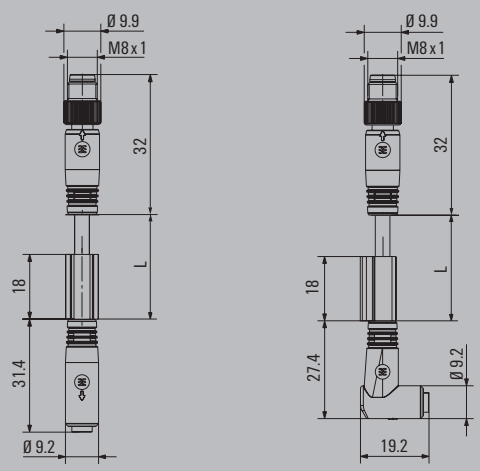

## Sensor cables

### Connecting cables
### M8 to M8 LED

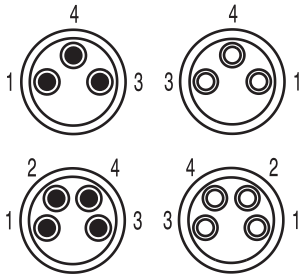


Male Female

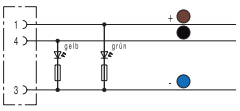


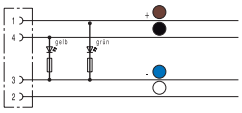


### Ordering data

| Male, straight - Female, angled | | 2 LEDs 3-pole Type | Order No. | 2 LEDs 4-pole Type | Order No. |
|---|---|---|---|---|---|
| PVC | 1.5 m | SAIL-M8GM8W-3L1.5V | 1927190150 | SAIL-M8GM8W-4L1.5V | 1927200150 |
| PUR halogen-free | 1.5 m | SAIL-M8GM8W-3L1.5U | 1877250150 | SAIL-M8GM8W-4L1.5U | 1906450150 |
| Note | | Other versions on request | | Other versions on request | |

### Standard cable lengths

| | | |
|---|---|---|
| All cables listed under the ordering data have a length of 1.5 metres. The last four ordering digits must be changed when ordering other standard cable lengths. | 1.5 m | xxxxxx0150 |
| | 3.0 m | xxxxxx0300 |
| | 5.0 m | xxxxxx0500 |
| | 10.0 m | xxxxxx1000 |

### Technical data

| | |
|---|---|
| Rated current | 4 A |
| Protection degree | IP 67 |
| Core cross-section | 0.25 mm² |
| Contact surface | Gold-plated |
| Temperature range of housing | -25...+85 °C |
| Rated voltage (acc. to VDE standard 0110 ISO group C) | 60 V (3-pole) / 30 V (4-pole) |
| Approvals | cURus; GOSTME25; ROHS |

Chapter W includes additional technical specifications for the cable

### Dimensioned drawing

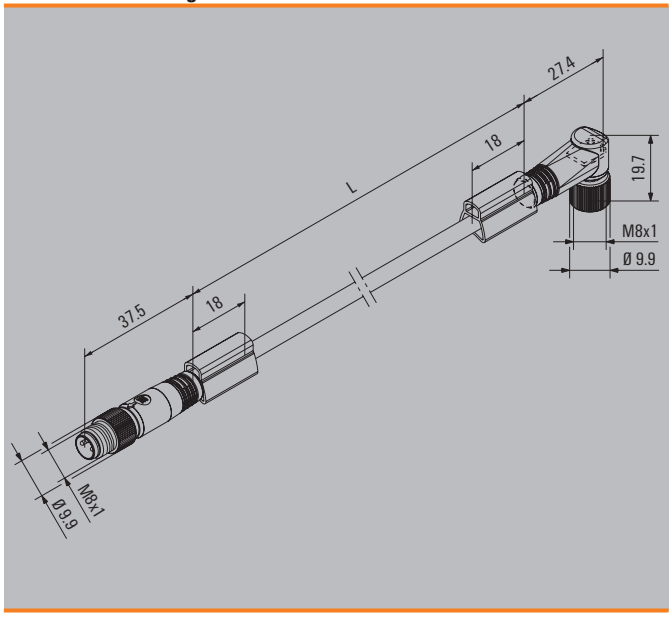

# Twin sensor cables with three plug-in connectors: M12/M8

## Twin sensor cables

In general, two sensor cables can be fed with an M12 connector to the distributor. A wide variety of wiring arrangements are possible with these cables. All M12 and M8 connections can be implemented.

Weidmüller has all the necessary components available. With mechanical engineering, this type of application is an exception.

### 4-pole connection

In the SAI distributor, the 4 pole socket is fitted with pins 1, 3, 4 and 5. The 4 pole SAI plug is fitted with pins 1, 2, 3 and 4. This corresponds to market standards.

Special care must be taken when wiring combinations of 4-pole plugs and distributors.

### Designation

Twin plug
Bifurcation open for "1" and "2" ends

One designation is no longer necessary when dealing with identical cable lengths.

Bifurcation 1 / Bifurcation 2

**SAIL-ZW - M8 - 3.0 / 1.5 U**

- SAIL: L = Metal nut; P = Plastic nut
- M8: M12; M8
- 3.0 / 1.5: Cable length 1.5 m, 3.0 m, 5.0 m, 10 m, X m
- U: Cable V = PVC-PVC; U = PUR halogen-free; T = resistant to splatter

Twin plug
Connecting cable

Bifurcation 1 and 2 identical / Bifurcation 1 and 2 identical length

**SAIL-ZW-M12BW - 2/4 - 1.5 U**

- SAIL: L = Metal nut; P = Plastic nut
- M12: M12; M8
- B: B = Socket
- W: G = straight; W = 90°
- 2/4: with M8BG / M8BW: 3- = 3-pole; with M12BG / M12BW: 3- = 3-pole, 2/4- = 2/4 bridged; with M8BW LED: 3L = LED; with M12BW LED: 3L = 3-pole LED, 2/4L = 2/4 bridged LED
- 1.5: Cable length 1.5 m, 3.0 m, 5.0 m, 10 m, X m
- U: Cable V = PVC-PVC; U = PUR halogen-free; T = resistant to splatter

## Twin cabling
## M12 to M12

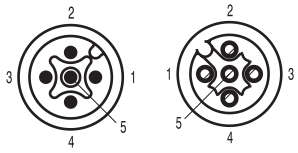


Male Female

### Ordering data

| Male straight - 2 females straight | | 3-pole | 2 LEDs | 3-pole |
|---|---|---|---|---|
| | | Type | Order No. | Type | Order No. |
| PUR halogen-free | 1.5 m | SAIL-ZW-M12BG-3-1.5U | 1005460150 | | |
| **Male straight - 2 females angled** | | | | | |
| PUR halogen-free | 1.5 m | SAIL-ZW-M12BW-3-1.5U | 1005270150 | SAIL-ZW-M12BW-3L1.5U | 1912110150 |
| **Note** | | | | | |

### Standard cable lengths

| | | |
|---|---|---|
| All cables listed under the ordering data have a length of 1.5 metres. The last four ordering digits must be changed when ordering other standard cable lengths. | 1.5 m | xxxxxx0150 |
| | 3.0 m | xxxxxx0300 |
| | 5.0 m | xxxxxx0500 |
| | 10.0 m | xxxxxx1000 |

### Technical data

| | |
|---|---|
| Rated current | 4 A |
| Protection degree | IP 65, IP 66, IP 67, IP 68 |
| Core cross-section | 0.34 mm² |
| Contact surface | Gold-plated |
| Temperature range of housing | -25...+85 °C |
| Rated voltage (acc. to VDE standard 0110 ISO group C) | 250 V |
| Approvals | CSA; cURus; GOSTME25; ROHS |

Chapter W includes additional technical specifications for the cable

### Dimensioned drawing

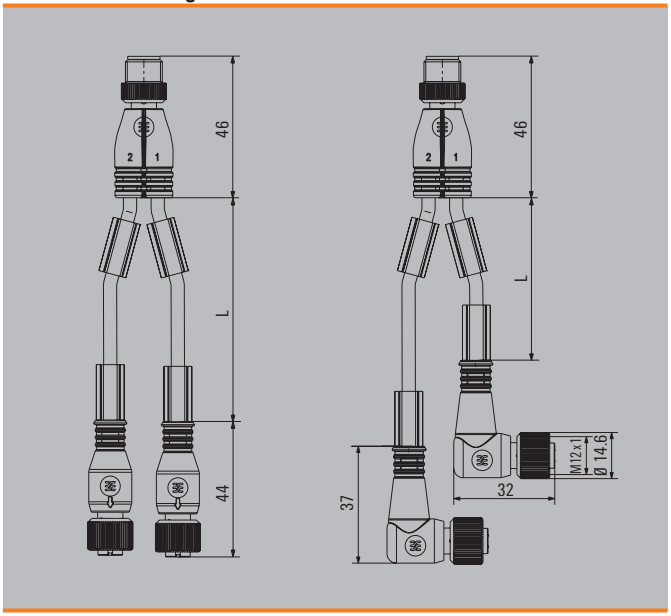

## Sensor cables

### Twin cabling M12 to M12 bridge between pins 2 and 4

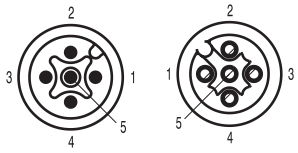


Male Female

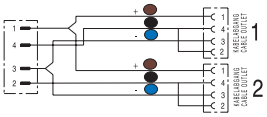


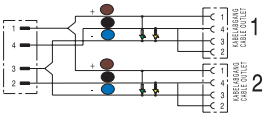


### Ordering data

| Male straight - 2 females straight | | 3-pole | 2 LEDs | 3-pole | |
|---|---|---|---|---|---|
| | | Type | Order No. | Type | Order No. |
| PUR halogen-free | 1.5 m | SAIL-ZW-M12BG-2/4-1.5U | **1812550150** | | |
| **Male straight - 2 females angled** | | | | | |
| PUR halogen-free | 1.5 m | SAIL-ZW-M12BW-2/4-1.5U | **1964280150** | SAIL-ZW-M12BW-2/4L1.5U | **1964290150** |
| **Note** | | | | | |

### Standard cable lengths

| | | |
|---|---|---|
| All cables listed under the ordering data have a length of 1.5 metres. The last four ordering digits must be changed when ordering other standard cable lengths. | 1.5 m | xxxxxx0150 |
| | 3.0 m | xxxxxx0300 |
| | 5.0 m | xxxxxx0500 |
| | 10.0 m | xxxxxx1000 |

### Technical data

| | |
|---|---|
| Rated current | 4 A |
| Protection degree | IP 65, IP 66, IP 67, IP 68 |
| Core cross-section | 0.34 mm² |
| Contact surface | Gold-plated |
| Temperature range of housing | -25...+85 °C |
| Rated voltage (acc. to VDE standard 0110 ISO group C) | 250 V (3- and 4-pole) / 125 V (5-pole) |
| Approvals | |

Chapter W includes additional technical specifications for the cable

### Dimensioned drawing

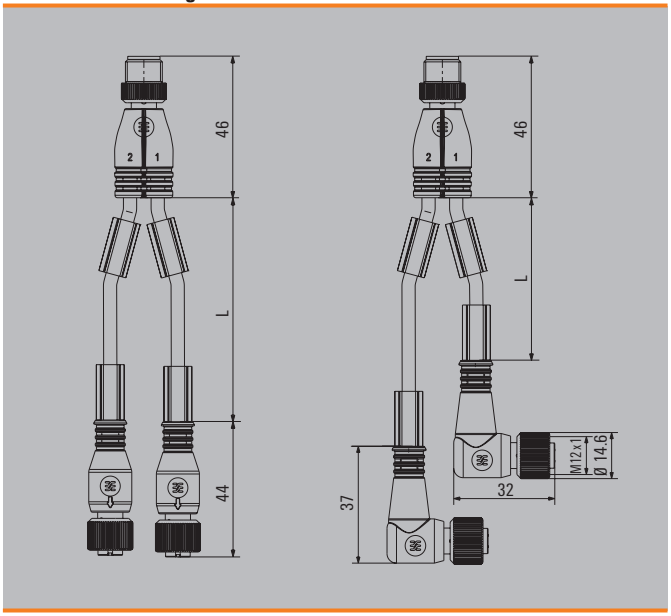

## Twin cabling
## M12 to M8

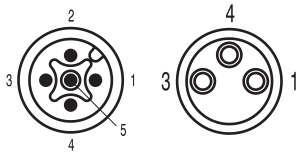


Male Female

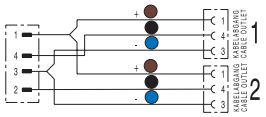


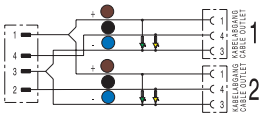


## Ordering data

| Male straight - 2 females straight | | 3-pole Type | 3-pole Order No. | 2 LEDs Type | 2 LEDs 3-pole Order No. |
|---|---|---|---|---|---|
| PUR halogen-free | 1.5 m | SAIL-ZW-M8BG-3-1.5U | 9457490150 | | |
| PUR halogen-free yellow | 1.5 m | SAIL-ZW-M8BG-3-1.5UGE | 1093250150 | | |
| **Male straight - 2 females angled** | | | | | |
| PUR halogen-free | 1.5 m | SAIL-ZW-M8BW-3-1.5U | 1964300150 | SAIL-ZW-M8BW-3L1.5U | 9457410150 |
| PUR halogen-free yellow | 1.5 m | SAIL-ZW-M8BW-3-1.5UGE | 1093260150 | | |
| **Note** | | | | Other versions on request | |

## Standard cable lengths

| | | |
|---|---|---|
| All cables listed under the ordering data have a length of 1.5 metres. The last four ordering digits must be changed when ordering other standard cable lengths. | 1.5 m | xxxxxx0150 |
| | 3.0 m | xxxxxx0300 |
| | 5.0 m | xxxxxx0500 |
| | 10.0 m | xxxxxx1000 |

## Technical data

| | |
|---|---|
| Rated current | 4 A |
| Protection degree | IP 65, IP 66, IP 67, IP 68 |
| Core cross-section | 0.25 mm² |
| Contact surface | Gold-plated |
| Temperature range of housing | -25...+85 °C |
| Rated voltage (acc. to VDE standard 0110 ISO group C) | 60 V (3-pole) / 30 V (4-pole) |
| Approvals | cURus; GOSTME25; ROHS |

Chapter W includes additional technical specifications for the cable

## Dimensioned drawing

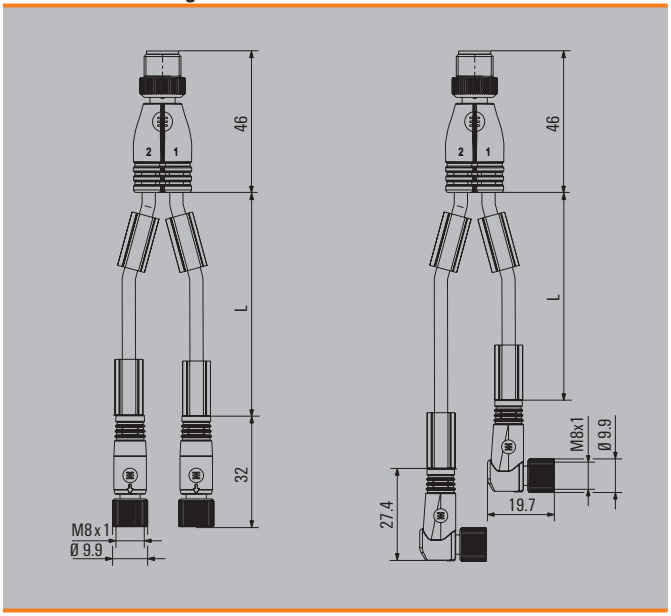

## M16 lines, moulded
## One end without connector

**Female**

## Ordering data

| | | 12-pole |
|---|---|---|
| | Type | Order No. |
| PUR 1.5 m | SAIL-M16BW-12-1.5U | 1259010150 |
| Note | | |

## Standard cable lengths

| | | |
|---|---|---|
| All cables listed in the ordering data have a length of 1.5 metres. The last four ordering digits must be changed when ordering other standard cable lengths. | 1.5 m | xxxxxx0150 |
| | 3.0 m | xxxxxx0300 |
| | 5.0 m | xxxxxx0500 |
| | 10.0 m | xxxxxx1000 |

## Technical data

| | |
|---|---|
| Rated current | 3 A |
| Protection degree | IP 67 |
| Core cross-section | 0.25 mm² |
| Contact surface | Gold-plated |
| Temperature range of housing | -25 ... +70 °C |
| Rated voltage (acc. to VDE standard 0110 ISO goup C) | 60 V |

## Dimensioned drawing

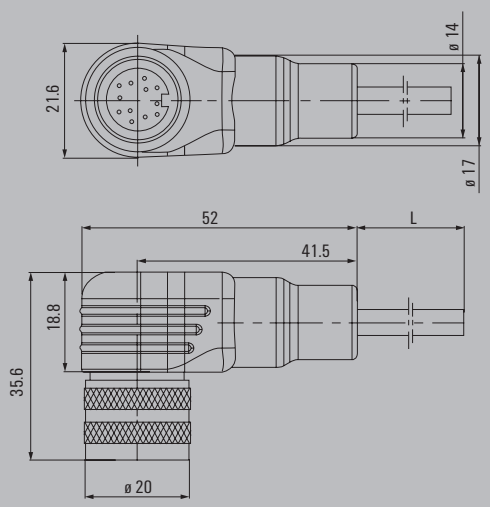

# B-coded M12 cables

Connector coding is very important to avoid the potential risk of damage due to connectors being incorrectly plugged together. This risk is particularly high when you need to plug in differing voltages. For example, it is not unusual to connect 110 or 230 V with a M12 plug-in connector. However if a 24 V electric potential is connected with a 110 or 230 V line, it will inevitably lead to destructive results. B-coding has been introduced for such cases. B-coded connectors are shaped so that they can not be fitted together unless extreme force is used. This coding makes it safe to use the standard M12 connector system in a single machine for different voltages which may exceeding 24 V. For the SAI Active Universal System, the power plug is A-coded since it only provides 24 V. The Profibus DP also takes advantage of this coding scheme. It is currently the only bus system using B-coded M12 plugs for IP 67-protected connections. In this case, special approved bulk stock cable is used instead of the power cables.

## M12 one end without connector
## unshielded
## B-coded

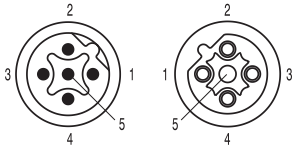


Male Female

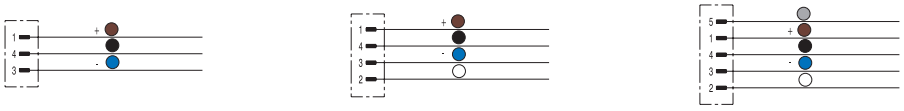

### Ordering data

| | | 3-pole | 4-pole | 5-pole |
|---|---|---|---|---|
| **Male, straight** | | | | |
| PUR halogen-free | 1.5 m | | | |
| **Male, angled** | | | | |
| PUR halogen-free | 1.5 m | | | |
| **Female, straight** | | | | |
| PUR halogen-free | 1.5 m | | | |
| **Female, angled** | | | | |
| PUR halogen-free | 1.5 m | | | |
| **Note** | | | | |

| Type | Order No. | Type | Order No. | Type | Order No. |
|---|---|---|---|---|---|
| SAIL-M12G-3B-1.5U | **1057770150** | SAIL-M12G-4B-1.5U | **1057780150** | SAIL-M12G-5B-1.5U | **1057790150** |
| SAIL-M12W-3B-1.5U | **1057800150** | SAIL-M12W-4B-1.5U | **1057810150** | SAIL-M12W-5B-1.5U | **1057820150** |
| SAIL-M12BG-3B-1.5U | **1057740150** | SAIL-M12BG-4B-1.5U | **1057750150** | SAIL-M12BG-5B-1.5U | **1061880150** |
| SAIL-M12BW-3B-1.5U | **1061890150** | SAIL-M12BW-4B-1.5U | **1061900150** | SAIL-M12BW-5B-1.5U | **1057760150** |

### Standard cable lengths

All cables listed under the ordering data have a length of 1.5 metres. The last four ordering digits must be changed when ordering other standard cable lengths.

| | |
|---|---|
| 1.5 m | xxxxxx0150 |
| 3.0 m | xxxxxx0300 |
| 5.0 m | xxxxxx0500 |
| 10.0 m | xxxxxx1000 |

### Technical data

| | |
|---|---|
| Rated current | 4 A |
| Protection degree | IP 65, IP 66, IP 67, IP 68 |
| Core cross-section | 0.34 mm² |
| Contact surface | Gold-plated |
| Temperature range of housing | -25...+85 °C |
| Rated voltage (acc. to VDE standard 0110 ISO group C) | 250 V (3- and 4-pole) / 125 V (5-pole) |
| Approvals | |

Chapter W includes additional technical specifications for the cable

### Dimensioned drawing

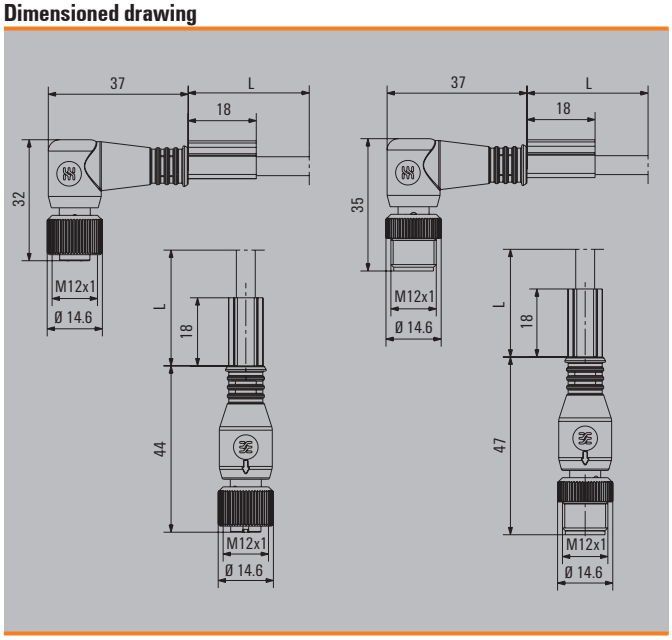

## M12 connecting cable
## unshielded
## B-coded

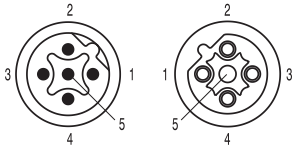


Male Female

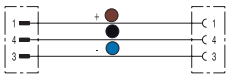

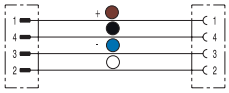

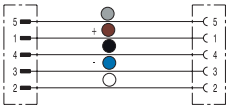

### Ordering data

| Type | Order No. 3-pole | Order No. 4-pole | Order No. 5-pole |
|---|---|---|---|
| **Male, straight - Female, straight** | | | |
| PUR halogen-free 1.5 m | SAIL-M12GM12G-3B-1.5U **1057830150** | SAIL-M12GM12G-4B-1.5U **1057840150** | SAIL-M12GM12G-5B-1.5U **1057850150** |
| **Male, straight - Female, angled** | | | |
| PUR halogen-free 1.5 m | SAIL-M12GM12W-3B-1.5U **1057900150** | SAIL-M12GM12W-4B-1.5U **1057910150** | SAIL-M12GM12W-5B-1.5U **1057920150** |
| **Male, angled - Female, angled** | | | |
| PUR halogen-free 1.5 m | SAIL-M12WM12W-3B-1.5U **1061910150** | SAIL-M12WM12W-4B-1.5U **1061920150** | SAIL-M12WM12W-5B-1.5U **1061930150** |
| **Male, angled - female, straight** | | | |
| PUR halogen-free 1.5 m | SAIL-M12WM12G-3B-1.5U **1057870150** | SAIL-M12WM12G-4B-1.5U **1057880150** | SAIL-M12WM12G-5B-1.5U **1057890150** |
| **Note** | Other versions on request | Other versions on request | Other versions on request |

### Standard cable lengths

| | | |
|---|---|---|
| All cables listed under the ordering data have a length of 1.5 metres. The last four ordering digits must be changed when ordering other standard cable lengths. | 1.5 m | xxxxxx0150 |
| | 3.0 m | xxxxxx0300 |
| | 5.0 m | xxxxxx0500 |
| | 10.0 m | xxxxxx1000 |

### Technical data

| | |
|---|---|
| Rated current | 4 A |
| Protection degree | IP 65, IP 66, IP 67, IP 68 |
| Core cross-section | 0.34 mm² |
| Contact surface | Gold-plated |
| Temperature range of housing | -25...+85 °C |
| Rated voltage (acc. to VDE standard 0110 ISO group C) | 250 V (3- and 4-pole) / 125 V (5-pole) |
| Approvals | |

Chapter W includes additional technical specifications for the cable

### Dimensioned drawing

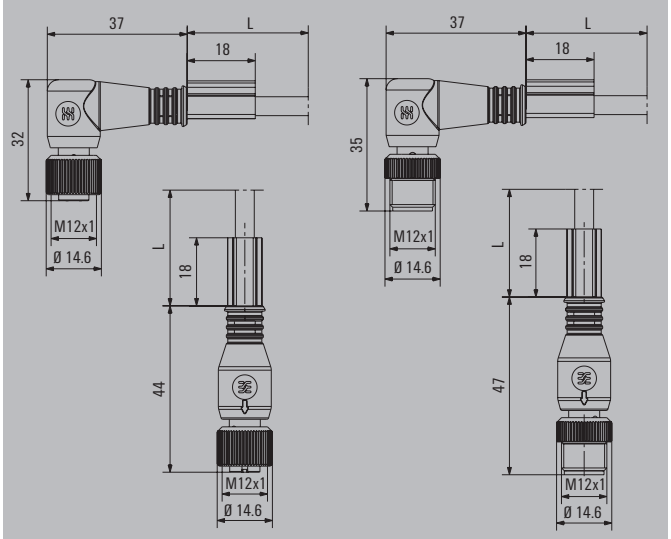

# Valve plug, ISO 4400

Machine builders frequently need different cable lengths for valve plugs. Valve plugs with free cable ends can be used to adjust the cable exactly to the lengths required.

Weidmüller can also supply valve plugs as connecting cables with M12 plugs.

The status of the valve plug is shown by an LED. Every valve plug is fitted with a protective circuit.

The Weidmüller range includes valve plugs of type A, B and C to DIN and industry standards.

Weidmüller plugs comply with IP 67 ingress protection class when plugged in.

The outgoing direction is also crucial. Weidmüller can supply 0° versions, i.e. the outgoing direction of the cable is at the PE contact.

**Valve plug Type A** **Valve plug Type B**

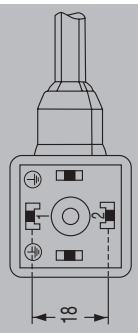


Contact gap 18 mm

Type: VSA

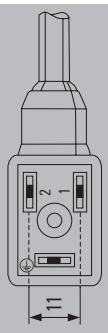


Contact gap 11 mm
Industry standard
Type: VSB

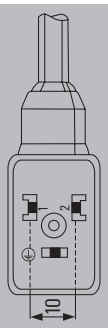


Contact gap 10 mm
to DIN 43650 (ISO 6952)
Type: VSBD

**Valve plug Type C**

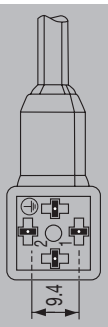


Contact gap 9.4 mm
Industry standard
Type: VSC

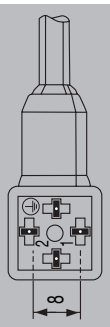


Contact gap 8 mm
to DIN 43650 (ISO 6952)
Type: VSCD

## Types

| Type | Contact gap |
|---|---|
| Type A | 18 mm |
| Type B industry standard | 11 mm |
| Type B DIN | 10 mm |
| Type C industry standard | 9.4 mm |
| Type C DIN | 8.0 mm |

## Example of designation

Valve plug
Connector at one end only

**SAIL-VSBD - 1.5 U**

| Valve plug | Cable length | Cable |
|---|---|---|
| VSA | 1.5 m | Q = PUR-TPE |
| VSB | 3.0 m | V = PVC-PVC |
| VSBD | 5.0 m | U = PUR-PVC |
| VSC | 10 m | |
| VSCD | X m | |

Valve plug
Connecting cable

**SAIL-VSBD - M8W 1.5 U**

Socket: VSBD
Pin: M8W

| Valve plug | M12 / M8 | G = straight / W = 90° | Cable length | Cable |
|---|---|---|---|---|
| VSA | M12 | G = straight | 1.5 m | Q = PUR-TPE |
| VSB | M8 | W = 90° | 3.0 m | V = PVC-PVC |
| VSBD | | | 5.0 m | U = PUR-PVC |
| VSC | | | 10 m | |
| VSCD | | | X m | |

## Design A

## Ordering data

| | | Type | A<br>Order No. |
|---|---|---|---|
| **Open cable end - valve plug** | | | |
| | 1.5 m | SAIL-VSA-1.5U | **9457710150** |
| **Male straight - valve plug** | | | |
| | 1.5 m | SAIL-VSA-M12G-1.5U | **9457040000** |
| **Male angled - valve plug** | | | |
| | 1.5 m | SAIL-VSA-M12W-1.5U | **1857690150** |
| **Note** | | Other versions on request | |

## Standard cable lengths

| | | |
|---|---|---|
| All cables listed under the ordering data have a length of 1.5 metres. The last four ordering digits must be changed to order other standard cable lengths. | 1.5 m | xxxxxx0150 |
| | 3.0 m | xxxxxx0300 |
| | 5.0 m | xxxxxx0500 |
| | 10.0 m | xxxxxx1000 |

## Technical data

| | |
|---|---|
| Sheathing colour | Grey |
| Sheath material | PUR |
| Rated current | 4 A |
| Protection degree | IP 67 |
| Core cross-section | 0.75 mm² |
| Contact surface | tinned |
| Temperature range of housing | -25...+85 °C |
| Rated voltage<br>(acc. to VDE standard 0110 ISO group C) | 24 V |
| Approvals | |

L in the drawing is the cable length

## Dimensioned drawing

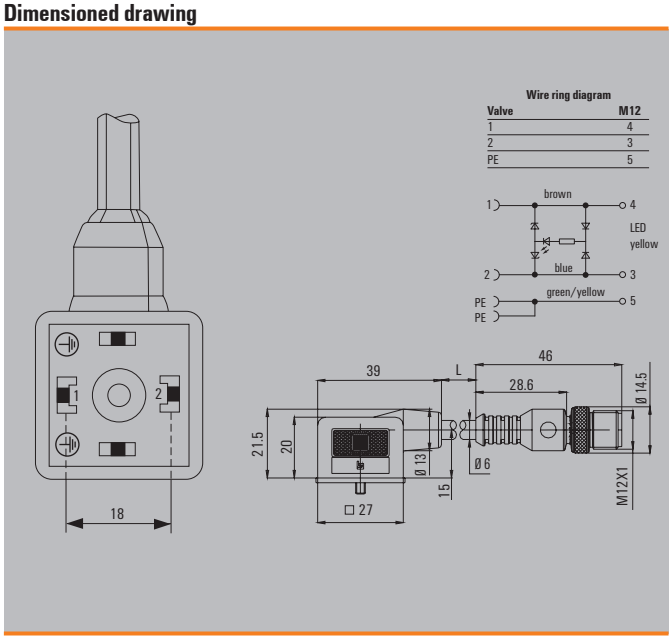

## Valve cables

### Design B/BD

B = Industrial standard
BD = DIN Standard

### Ordering data

| | | B | BD |
|---|---|---|---|
| **Open cable end - valve plug** | **Type** | **Order No.** | **Type** / **Order No.** |
| 1.5 m | SAIL-VSB-1.5U | **9457930150** | SAIL-VSBD-1.5U / **9456070150** |
| **Male straight - valve plug** | | | |
| 1.5 m | SAIL-VSB-M12G-1.5U | **9457680150** | SAIL-VSBD-M12G-1.5U / **9457780150** |
| **Male angled - valve plug** | | | |
| 1.5 m | SAIL-VSB-M12W-1.5U | **1857700150** | SAIL-VSBD-M12W-1.5U / **1857710150** |
| **Note** | Other versions on request | | Other versions on request |

### Standard cable lengths

| | | |
|---|---|---|
| All cables listed under the ordering data have a length of 1.5 metres. The last four ordering digits must be changed to order other standard cable lengths. | 1.5 m | xxxxxx0150 |
| | 3.0 m | xxxxxx0300 |
| | 5.0 m | xxxxxx0500 |
| | 10.0 m | xxxxxx1000 |

### Technical data

| | |
|---|---|
| Sheathing colour | Grey |
| Sheath material | PUR |
| Rated current | 4 A |
| Protection degree | IP 67 |
| Core cross-section | 0.75 mm² |
| Contact surface | tinned |
| Temperature range of housing | -25...+85 °C |
| Rated voltage (acc. to VDE standard 0110 ISO group C) | 24 V |
| Approvals | |

L in the drawing is the cable length

### Dimensioned drawing

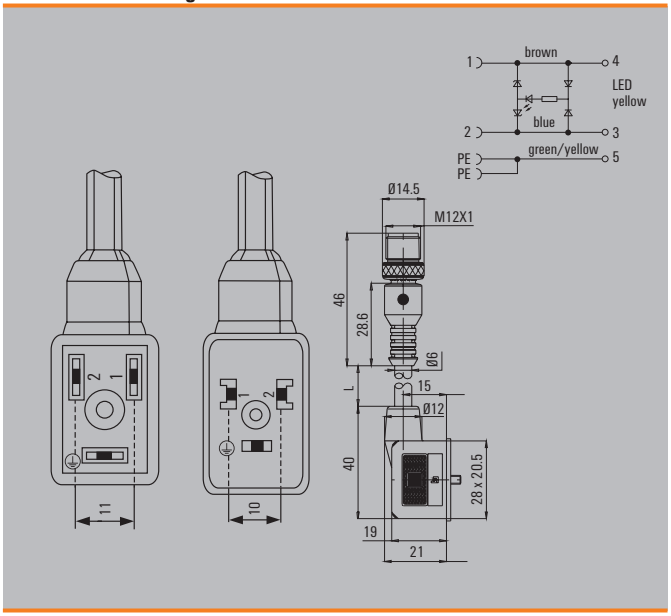

## Design C/CD

C = Industrial standard
CD = DIN Standard

## Ordering data

| | | C | CD |
|---|---|---|---|
| **Open cable end - valve plug** | **Type** | **Order No.** | **Type** / **Order No.** |
| 1.5 m | SAIL-VSC-1.5U | **9457920150** | SAIL-VSCD-1.5U **9456240150** |
| **Male straight - valve plug** | | | |
| 1.5 m | SAIL-VSC-M12G-1.5U | **9457400150** | SAIL-VSCD-M12G-1.5U **9456170150** |
| **Male angled - valve plug** | | | |
| 1.5 m | SAIL-VSC-M12W-1.5U | **1857720150** | SAIL-VSCD-M12W-1.5U **1857730150** |
| **Note** | Other versions on request | | Other versions on request |

## Standard cable lengths

| | | |
|---|---|---|
| All cables listed under the ordering data have a length of 1.5 metres. The last four ordering digits must be changed to order other standard cable lengths. | 1.5 m | xxxxxx0150 |
| | 3.0 m | xxxxxx0300 |
| | 5.0 m | xxxxxx0500 |
| | 10.0 m | xxxxxx1000 |

## Technical data

| | |
|---|---|
| Sheathing colour | Grey |
| Sheath material | PUR |
| Rated current | 4 A |
| Protection degree | IP 67 |
| Core cross-section | 0.5 mm² |
| Contact surface | tinned |
| Temperature range of housing | -25...+85 °C |
| Rated voltage (acc. to VDE standard 0110 ISO group C) | 24 V |
| Approvals | |

L in the drawing is the cable length

## Dimensioned drawing

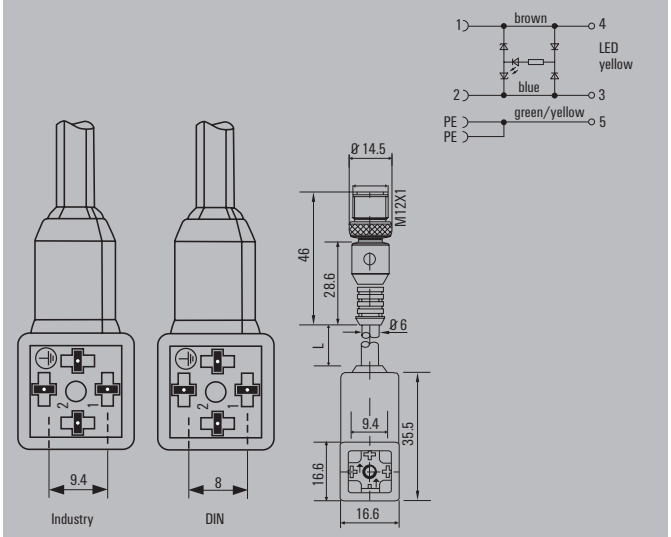

# Introduction

**Type A**

**Type B**

**Type C**

When building special machines, individual cable lengths are frequently required, which are then joined directly to Weidmüller's IDC distributors. Our product portfolio contains a corresponding valve plug for such applications.

This valve plug has a transparent enclosure with integral seal. In addition, a protective sleeve can be slipped over the cable to protect the connected line. The connection cross-section is 0.5 $mm^2$ for direct connection to our SAI IDC distributor.
The status of the valve plug is indicated by an LED. All valve plugs are fitted with protective circuits.

The Weidmüller range includes valve plug forms A, B and C to DIN and industry standards. The plug conforms to ingress protection class IP 67 when plugged in.

**Types**

| Type | Contact gap |
|---|---|
| Type A | 18 mm |
| Type B industry standard | 11 mm |
| Type B DIN | 10 mm |
| Type C industry standard | 9.4 mm |
| Type C DIN | 8.0 mm |

## Design A

Suitable for IDC
plug-in connectors and protective hose
connection

## Ordering data

| Open cable end - valve plug | | A |
|---|---|---|
| 1.5 m | Type | Order No. |
| | SAIL-VSA-1.5U(0.5) | 1845120150 |
| Note | Supplied without protective hose | |

## Standard cable lengths

| | | |
|---|---|---|
| All cables listed under the ordering data have a length of 1.5 metres. The last four ordering digits must be changed to order other standard cable lengths. | 1.5 m | xxxxxx0150 |
| | 3.0 m | xxxxxx0300 |
| | 5.0 m | xxxxxx0500 |
| | 10.0 m | xxxxxx1000 |

## Technical data

| | |
|---|---|
| Sheathing colour | Black |
| Sheath material | PUR |
| Rated current | 4 A |
| Protection degree | IP 67 |
| Core cross-section | 0.5 mm² |
| Contact surface | tinned |
| Temperature range of housing | -25...+85 °C |
| Rated voltage (acc. to VDE standard 0110 ISO group C) | 24 V |
| Approvals | |

L in the drawing is the cable length

## Dimensioned drawing

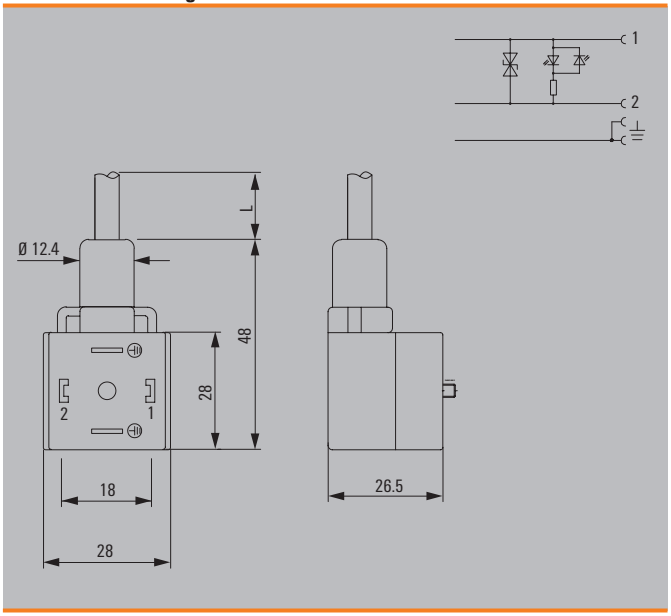

## Valve cables

### Design B/BD

B = industry standard
BD = DIN standard

Suitable for IDC
plug-in connectors and protective hose
connection

### Ordering data

| Open cable end - valve plug | | B | BD |
|---|---|---|---|
| | | Type / Order No. | Type / Order No. |
| | 1.5 m | SAIL-VSB-1.5U(0.5) / 1845140150 | SAIL-VSBD-1.5U(0.5) / 1845160150 |
| Note | | Supplied without protective hose | Supplied without protective hose |

### Standard cable lengths

| | | |
|---|---|---|
| All cables listed under the ordering data have a length of 1.5 metres. The last four ordering digits must be changed to order other standard cable lengths. | 1.5 m | xxxxxx0150 |
| | 3.0 m | xxxxxx0300 |
| | 5.0 m | xxxxxx0500 |
| | 10.0 m | xxxxxx1000 |

### Technical data

| | |
|---|---|
| Sheathing colour | Black |
| Sheath material | PUR |
| Rated current | 4 A |
| Protection degree | IP 67 |
| Core cross-section | 0.5 mm² |
| Contact surface | tinned |
| Temperature range of housing | -25...+85 °C |
| Rated voltage (acc. to VDE standard 0110 ISO group C) | 24 V |
| Approvals | |

L in the drawing is the cable length

### Dimensioned drawing

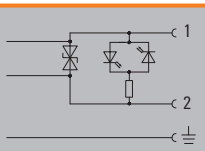


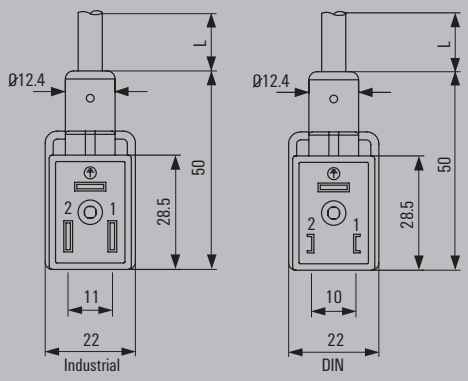

## Design A

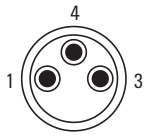


**Male**

## Ordering data

| Male straight - valve plug | | A |
|---|---|---|
| | Type | Order No. |
| 1.5 m | SAIL-VSA-M8G-3-1.5U | 1099760150 |
| Note | | |

## Standard cable lengths

| | | |
|---|---|---|
| All cables listed under the ordering data have a length of 1.5 metres. The last four ordering digits must be changed to order other standard cable lengths. | 1.5 m | xxxxxx0150 |
| | 3.0 m | xxxxxx0300 |
| | 5.0 m | xxxxxx0500 |
| | 10.0 m | xxxxxx1000 |

## Technical data

| | |
|---|---|
| Sheathing colour | Black |
| Sheath material | PUR |
| Rated current | 4 A |
| Protection degree | IP 67 (when screwed in) |
| Core cross-section | 0.34 mm² |
| Contact surface | tinned |
| Temperature range of housing | -25...+85 °C |
| Rated voltage (acc. to VDE standard 0110 ISO group C) | 24 V |
| Approvals | |

## Dimensioned drawing

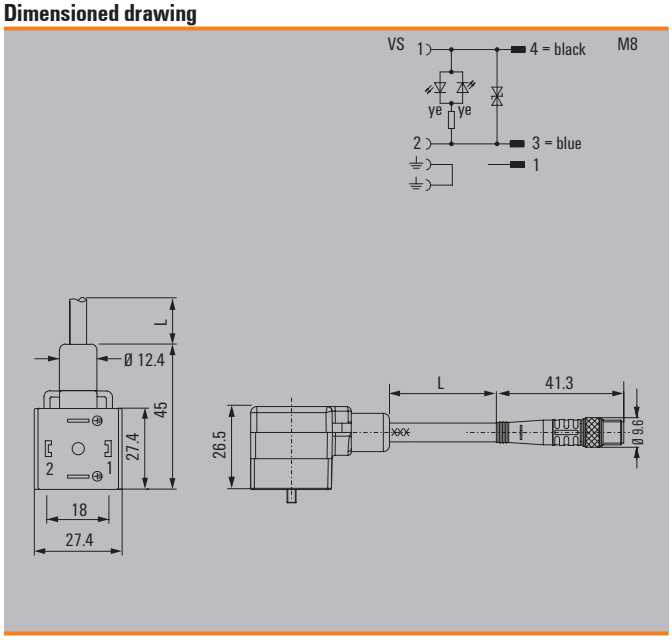

## Valve cables

### Design B/BD

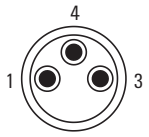


Male

### Ordering data

| Male straight - valve plug | | BD Type | BD Order No. | B Type | B Order No. |
|---|---|---|---|---|---|
| | 1.5 m | SAIL-VSB-M8G-3-0.15U | 1271590015 | | |
| | 1.5 m | | | SAIL-VSBD-M8G-3-1.5U | 1099770150 |
| **Male straight - valve plug 180°** | | | | | |
| | 1.5 m | | | SAIL-VSBD180-M8G-3-1.5U | 1276450150 |
| **Note** | | | | | |

### Standard cable lengths

| | | |
|---|---|---|
| All cables listed under the ordering data have a length of 1.5 metres. The last four ordering digits must be changed to order other standard cable lengths. | 1.5 m | xxxxxx0150 |
| | 3.0 m | xxxxxx0300 |
| | 5.0 m | xxxxxx0500 |
| | 10.0 m | xxxxxx1000 |

### Technical data

| | |
|---|---|
| Sheathing colour | Black |
| Sheath material | PUR |
| Rated current | 4 A |
| Protection degree | IP 67 (when screwed in) |
| Core cross-section | 0.34 mm² |
| Contact surface | tinned |
| Temperature range of housing | -25...+85 °C |
| Rated voltage (acc. to VDE standard 0110 ISO group C) | 24 V |
| Approvals | |

### Dimensioned drawing

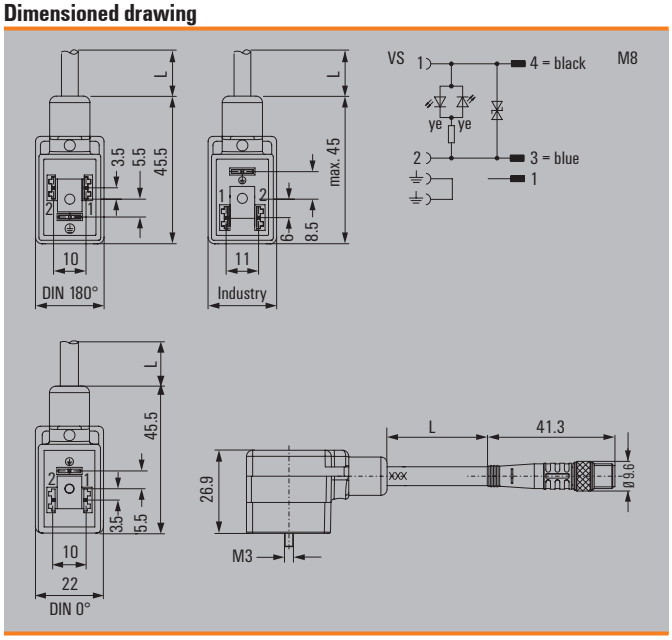

## Design C/CD

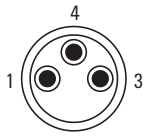


**Male**

## Ordering data

| Male straight - valve plug | | CD | C |
|---|---|---|---|
| | | Type / Order No. | Type / Order No. |
| | 1.5 m | | |
| | 1.5 m | SAIL-VSCD-M8G-3-1.5U / **1916700150** | SAIL-VSC-M8G-0.15U / **1309680015** |
| Note | | | |

## Standard cable lengths

| | | |
|---|---|---|
| All cables listed under the ordering data have a length of 1.5 metres. The last four ordering digits must be changed to order other standard cable lengths. | 1.5 m | xxxxxx0150 |
| | 3.0 m | xxxxxx0300 |
| | 5.0 m | xxxxxx0500 |
| | 10.0 m | xxxxxx1000 |

## Technical data

| | |
|---|---|
| Sheathing colour | Black |
| Sheath material | PUR |
| Rated current | 4 A |
| Protection degree | IP 67 (when screwed in) |
| Core cross-section | 0.34 mm² |
| Contact surface | tinned |
| Temperature range of housing | -25...+85 °C |
| Rated voltage (acc. to VDE standard 0110 ISO group C) | 24 V |
| Approvals | |

## Dimensioned drawing

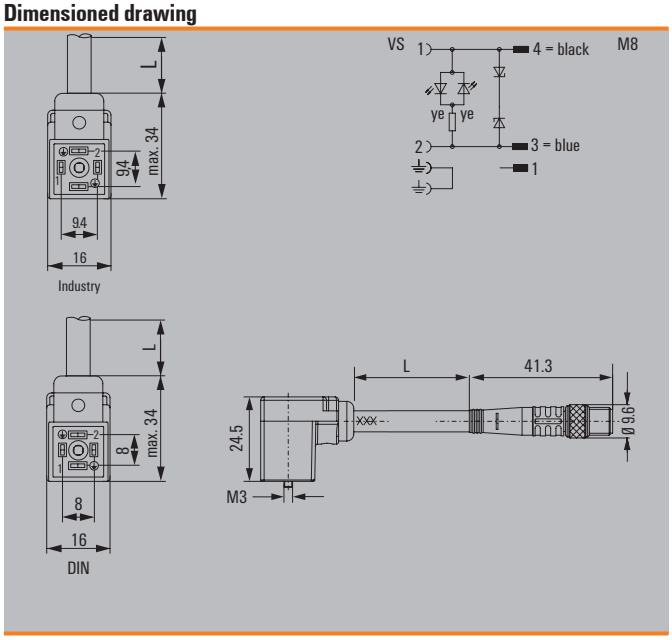

# Cables 3, 4, 5 poles

Weidmüller can provide the following types of cables for connecting sensors and actuators:

- The outer sheathing of the cables is made from polyurethane and the inner stranded wires have PVC insulation.
- They are available with 3, 4 and 5 poles.
- In addition, the cables are also available with PVC outer sheathing and PVC insulation internally.

## Ordering data

| PUR halogen-free | Qty. | Order No. |
|---|---|---|
| SAIH-SLL-3x0.34mm² (PUR) | 100 m | 1902110000 |
| SAIH-SLL-4x0.25mm² (PUR) | 100 m | 1902120000 |
| SAIH-SLL-4x0.34mm² (PUR) | 100 m | 1902130000 |
| SAIH-SLL-3x0.25mm² (PUR) | 100 m | 1902140000 |
| | | |
| **PVC** | | |
| SAIH-SLL-3x0.34mm² (PVC) | 100 m | 1902160000 |
| SAIH-SLL-4x0.25mm² (PVC) | 100 m | 1902170000 |
| SAIH-SLL-4x0.34mm² (PVC) | 100 m | 1902180000 |
| SAIH-SLL-3x0.25mm² (PVC) | 100 m | 1902190000 |
| **Note** | | |

## Technical data

| | | |
|---|---|---|
| Colour | | black |
| Cross-section | mm² | 0.25 ... 0.34 |
| Qty. | | 100 Metre |
| **Note** | | |

## Ordering data

| PUR halogen-free yellow | Qty. | Order No. |
|---|---|---|
| SAIH-SLL-3x0.34mm² (UGE) | 100 m | 1345520000 |
| SAIH-SLL-4x0.34mm² (UGE) | 100 m | 1345530000 |
| SAIH-SLL-5x0.34mm² (UGE) | 100 m | 1345540000 |
| | | |
| | | |
| **PUR halogen-free shielded** | | |
| SAIH-SLL-3x0.34mm² (SI PUR) | 100 m | 1357320000 |
| SAIH-SLL-4x0.34mm² (SI PUR) | 100 m | 1357330000 |
| SAIH-SLL-5x0.34mm² (SI PUR) | 100 m | 1357340000 |
| | | |
| | | |
| **Note** | | |

## Technical data

| | | |
|---|---|---|
| Colour | | black, yellow |
| Cross-section | mm² | 0.34 |
| Qty. | | 100 Metre |
| **Note** | | |

# Bus cables

Owing to their easy assembly and adaptability, Weidmüller distributors have become very popular among machine manufacturers. For such applications, Weidmüller can supply corresponding bus cables for custom assembly.

The bus cables are available in three different versions. All bus cables are suitable for moving cable carriers and are available by the metre. All three trunk cables can be ordered in individual lengths. A typical order quantity is a 500 metre drum. The colour coding of wires conforms to the standard in mechanical engineering.

The connection hoods of the M12 SAI distributors are always fitted with the same terminals so that only one type of cable is equired.

**Advantages of bus cables supplied by the metre:**

- Special lengths for bus cables
- No cable waste
- No storage space required for different cable lengths
- Bulk stock will be cut to desired length.

**Ordering data**

| Type | Qty. | Order No. |
|---|---|---|
| SAIH-SLL 3 x 0.75 – 16 x 0.34 | 1 m | **9457560000** |
| SAIH-SLL 5 x 0.75 – 16 x 0.34 | 1 m | **9457970000** |
| SAIH-SLL 3 x 0.75 – 8 x 0.34 | 1 m | **9457420000** |
| SAIH-SLL 3 x 1.0 – 16 x 0.5 | 1 m | **1344720000** |

# M8, M12 Fieldbus, data cables and accessories


| | | |
|---|---|---|
| **M8, M12 Fieldbus, data cables and accessories** | Introduction | C.2 |
| | Fieldbus distributor - Overview | C.4 |
| | PROFIBUS-DP - cables | C.6 |
| | PROFIBUS-DP - connectors (M12, Sub-D) | C.11 |
| | PROFIBUS-DP - FBCon T-distributor | C.22 |
| | PROFIBUS-PA - cables | C.26 |
| | PROFIBUS PA - connectors | C.31 |
| | PROFIBUS-PA - FBCon T-distributor | C.34 |
| | PROFIBUS-PA - FBCon T-distributor with surge protection | C.40 |
| | PROFIBUS-PA - FBCon T-distributor ATEX Ex(ia) | C.50 |
| | AS-Interface Line | C.58 |
| | ASI - Cables | C.60 |
| | ASI - T-piece | C.61 |
| | CANopen & DeviceNet™ - cables (M12, M8) | C.62 |
| | CANopen & DeviceNet™ - connectors | C.67 |
| | EtherCat - connectors (M8) | C.68 |
| | Ethernet cables | C.69 |
| | Ethernet plug-in connector | C.77 |
| | FOUNDATION Fieldbus - connector (7/8") | C.80 |
| | Accessories cable glands | C.81 |

# Bus cables

The bus system lies at the heart of automation engineering. High quality products are essential here, if you hope to achieve long term, smooth functionality.
It's not only the slaves and controllers that play a significant role; the type of cables and connection mechanisms in use are also very important. Weidmüller bus cables are the ideal solution. The products, which we manufacture ourselves, (used, for example, in the Profibus, Industrial Ethernet and CANopen/DeviceNet™ sectors) have a 360 degree shielding within the moulding. This provides effective protection for signal and data transmission.
Delivery times are another decisive factor. Our special production strategy allows us to quickly manufacture parts that are customised to a specific order. We have a dedicated department that is focussed on this strategy and which is located close to the Detmold central warehouse in order to keep delivery times to a minimum.

Bus cables: shown here in the standard colours:
blue (Profibus-PA Ex i), black (CANopen/DeviceNet or Profibus-PA), magenta (Profibus-DP) and green (Industrial Ethernet) together with the sensor cables

**Cables**

**M12 plug-in connector**

**Sub-D connector**

**FBCon T-distributor**

# System description, fieldbus components

FBCon fieldbus distributors are available in industrial and Ex(ia) versions. They are used for coupling 1-8 field devices devices or sensors.
The connection is made via a spur. The spur is connected by an M12 plug in connector or directly via an EMC cable gland. The communication and device powering is handled by a common 2-core wire.

The distributors offer the following features irrespective of the version:

- Tension clamp connection technology
- Surge protection for the main line
- Current limiter for each stub line
- EMC cable gland
- M12 plug in connectors
- External earth stud
- Interruption-free bus operation
- Industrial specification
- Bus termination integrated (non EX)
- ⊛ ATEX version
- Pressure equalising element
- IP 65, IP 66, IP 67 Ingress protection class
- Stainless steel versions
- PROFIBUS-PA compatible

**Typical PROFIBUS system layout**

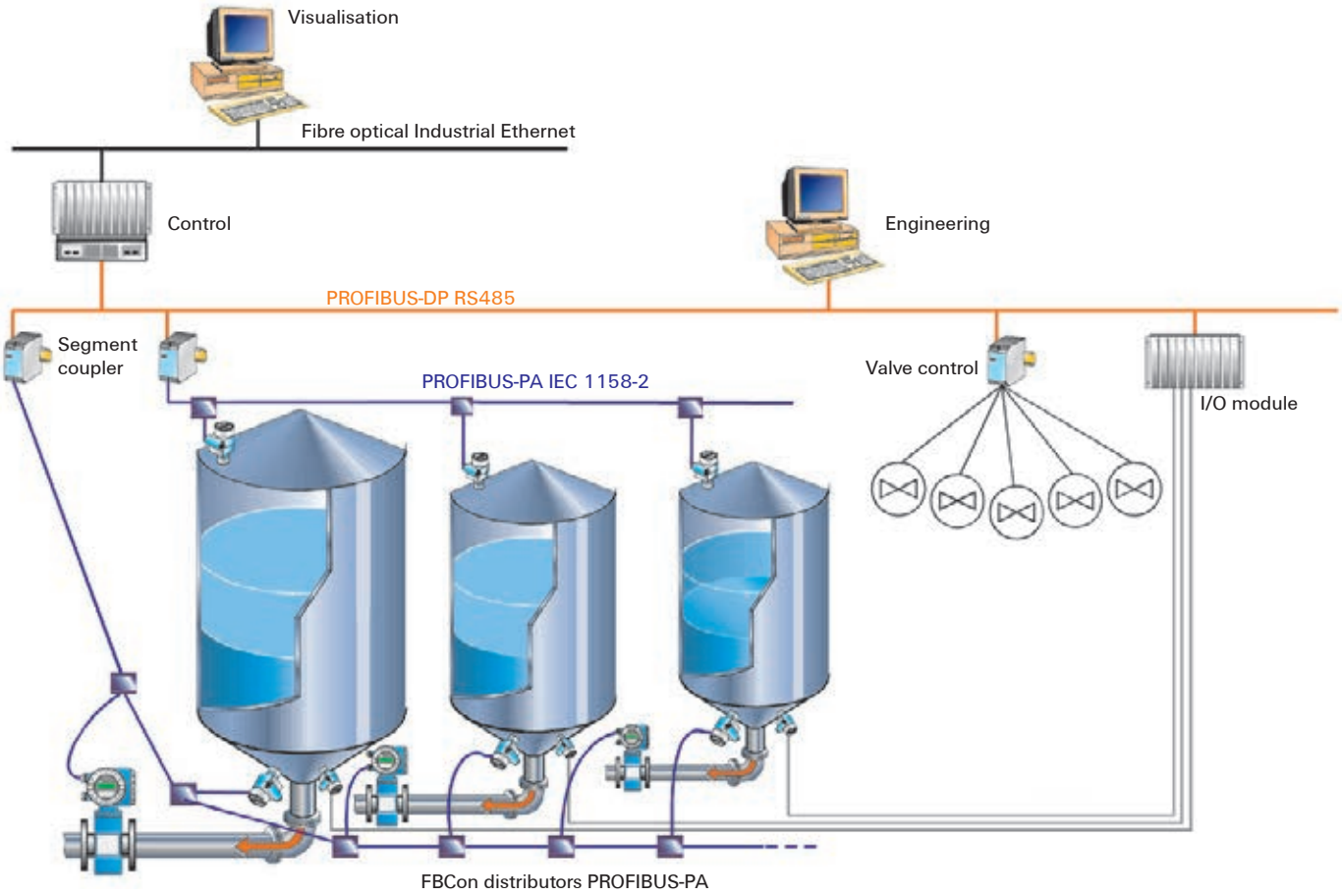

# Product coding

The FBCon family of distributors includes various forms. The product name indicates the respective features as follows:

| | |
|---|---|
| FBCon | Field Bus Connection |
| PA | PROFIBUS-PA Process Automation |
| DP | PROFIBUS-DP Decentralised Periphery |
| SS | Stainless Steel |
| CG | Stainless steel cable gland on stainless steel housing. On standard aluminium housings, the cable gland is nickel-plated brass. |
| PCG | Plastic Cable Gland |
| CG/M12 | M12 plug-in connector for the stub cables and cable gland for the trunk cable |
| 1way | Number of outgoing stub lines |
| Limiter | Current limiter: protects the PROFIBUS-PA network in the event of an overload in the stub line |
| OVP | Surge protection: protects the system in the event of a voltage surge |
| EX | Approved for potentially explosive areas |
| ATEX | For explosive atmospheres |

The standard distributors are grey. The Ex approved distributors are painted blue.

PROFIBUS-PA distributors are generally equipped with a switch in terminating resistor. In potentially explosive areas, the terminating resistor is manufactured with a separate box. This must be used instead of the right-hand cable gland. In the case of PROFIBUS-DP, an additional external 24 V DC power supply is required. This makes the terminator independent of the last station in the network.

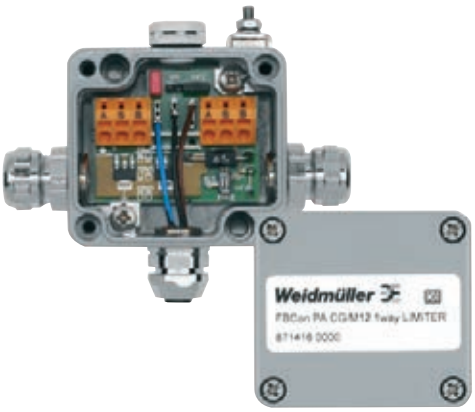


**FBCon PA CG/M12 1way Limiter**

**FBCon SS PCG 1way**

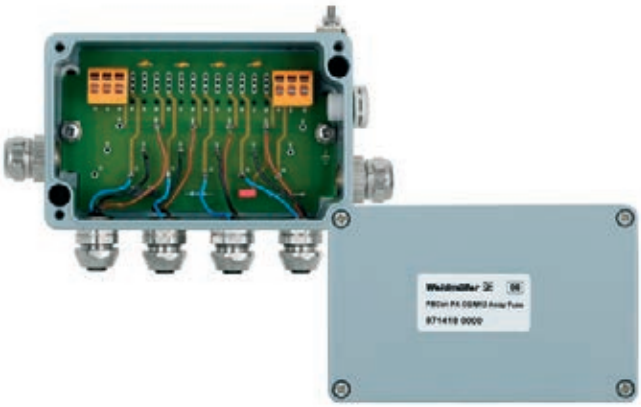

**FBCon PA CG 1way Ex**

# PROFIBUS-DP - cables

## PROFIBUS-DPcables
## one end without connector

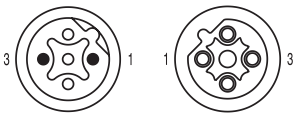


Male Female

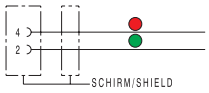


### Ordering data

| | | 2-pole |
|---|---|---|
| **Male, straight** | | |
| PUR halogen-free | 1.5 m | |
| PVC/PVC | 1.5 m | |
| **Male, angled** | | |
| PUR halogen-free | 1.5 m | |
| PVC/PVC | 1.5 m | |
| **Female, straight** | | |
| PUR halogen-free | 1.5 m | |
| PVC/PVC | 1.5 m | |
| **Female, angled** | | |
| PUR halogen-free | 1.5 m | |
| PVC/PVC | 1.5 m | |
| **Note** | | |

| Type | Order No. |
|---|---|
| SAIL-M12G-PB-1.5D | 1873300150 |
| SAIL-M12G-PB-1.5E | 1058530150 |
| | |
| SAIL-M12W-PB-1.5D | 1061970150 |
| SAIL-M12W-PB-1.5E | 1062340150 |
| | |
| SAIL-M12BG-PB-1.5D | 1873320150 |
| SAIL-M12BG-PB-1.5E | 1058540150 |
| | |
| SAIL-M12BW-PB-1.5D | 1062300150 |
| SAIL-M12BW-PB-1.5E | 1062370150 |
| Other versions on request | |

### Standard cable lengths

All cables listed under the ordering data have a length of 1.5 metres. The last four ordering digits must be changed when ordering other standard cable lengths.

| | |
|---|---|
| 1.5 m | xxxxxx0150 |
| 3.0 m | xxxxxx0300 |
| 5.0 m | xxxxxx0500 |
| 10.0 m | xxxxxx1000 |

### Technical data

| | |
|---|---|
| Sheathing colour | violet |
| Protection degree | IP 67 |
| Wire cross section | PUR 0.24 mm² / PVC 0.34 mm² |
| Contact surface | Gold-plated |
| Temperature range of housing | -25...+85 °C |

Chapter W includes additional technical specifications for the cable

### Dimensioned drawing

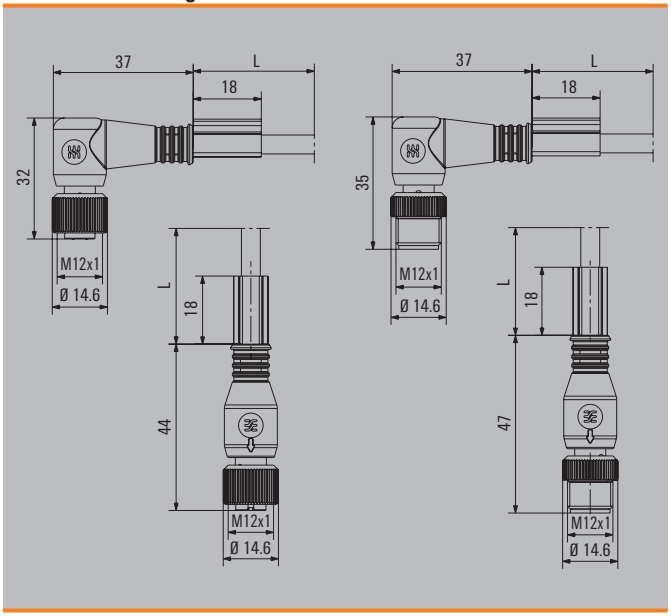

## PROFIBUS-DP cables
## Connecting cables

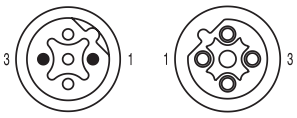


Male Female

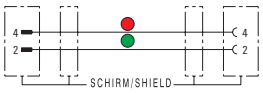


### Ordering data

| | | 2-pole |
|---|---|---|
| **Male, straight - Female, straight** | | |
| PUR halogen-free | 1.5 m | |
| PVC/PVC | 1.5 m | |
| **Male, straight - Female, angled** | | |
| PUR halogen-free | 1.5 m | |
| PVC/PVC | 1.5 m | |
| **Male, angled - Female, angled** | | |
| PUR halogen-free | 1.5 m | |
| PVC/PVC | 1.5 m | |
| **Note** | | |

| Type | Order No. |
|---|---|
| SAIL-M12GM12G-PB-1.5D | **1873310150** |
| SAIL-M12GM12G-PB-1.5E | **1058570150** |
| | |
| SAIL-M12GM12W-PB-1.5D | **1062310150** |
| SAIL-M12GM12W-PB-1.5E | **1062380150** |
| | |
| SAIL-M12WM12W-PB-1.5D | **1062330150** |
| SAIL-M12WM12W-PB-1.5E | **1062400150** |
| Other versions on request | |

### Standard cable lengths

| | | |
|---|---|---|
| All cables listed under the ordering data have a length of 1.5 metres. The last four ordering digits must be changed when ordering other standard cable lengths. | 1.5 m | xxxxxx0150 |
| | 3.0 m | xxxxxx0300 |
| | 5.0 m | xxxxxx0500 |
| | 10.0 m | xxxxxx1000 |

### Technical data

| | |
|---|---|
| Sheathing colour | violet |
| Protection degree | IP 67 |
| Wire cross section | PUR 0.24 mm² / PVC 0.34 mm² |
| Contact surface | Gold-plated |
| Temperature range of housing | -25...+85 °C |

Chapter W includes additional technical specifications for the cable

### Dimensioned drawing

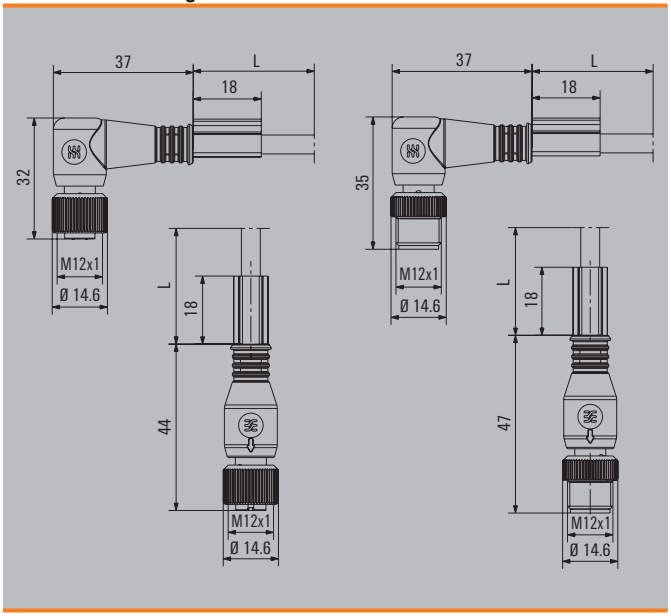

## PROFIBUS-DP bulk lengths

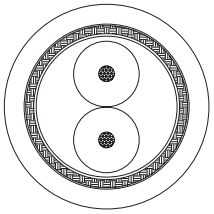

## Technical data

| | | |
|---|---|---|
| **Assembly** | | |
| Wire | Conductor: 19-wire strands copper shiny, AWG 24, 0.64 mm Ø nominal<br>Insulation: PE foam, 2.55 mm Ø nominal | |
| Pair | 2 wires according to 3.2.1 (red, green) laid as a pair, 5.1 mm Ø nominal | |
| Interior sheathing | Coil-filling interior sheathing, 5.3 mm Ø nominal | |
| Shield | a) Overlapping aluminium film, 6.1 mm Ø nominal<br>b) Braided tin-plated copper, coverage approx. 65%, 6.1 Ø nominal | |
| Outer cladding | TPE-U free from halogens, 8.0 +/- 0.4 mm | |
| **Electrical characteristics at 20 °C** | | |
| Conductor resistance | < 84.0 Ω/km | |
| Insulation resistance | > 1 GΩ ● km | |
| Operational capacity | < 35 nF/km | |
| Characteristic impedance | 9.6 Khz (RW) | 300 Ω |
| | 38.4 Khz (RW) | 185 +/- 20 Ω |
| | 3-20 Mhz | 150 +/- 15 Ω |
| Attenuation | 9.6 Khz | 3 dB/km |
| | 38.4 Khz | 5 dB/km |
| | 4 Mhz | 26 dB/km |
| | 16 Mhz | 55 dB/km |
| Test voltage (50 Hz, 1 min.) | Wire/wire | 0.5 $kV_{eff}$ |
| | Wire/shield | 0.5 $kV_{eff}$ |
| **Mechanical and thermal characteristics** | | |
| Temperature range | Stationary | -40 °C to +70 °C |
| | Moving | -20 °C to +60 °C |
| Min. permitted bending radius | Once | 7.5 x d |
| | Multiple | 15 x d |
| Max. tensile load resistance | Static | 50 N/mm² |
| | Dynamic | 20 N/mm² |
| Suitable for dragline cable carriers | Yes | |
| Halogen-free | Yes | |

**Note**

## Ordering data

| | Type | Order No. |
|---|---|---|
| Metre goods | SAIH-PB-2X0.24-PUR | 1232620000 |

**Note**

## PROFIBUS-DP bulk lengths

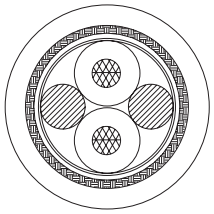

## Technical data

| | | |
|---|---|---|
| **Assembly** | | |
| Wire | Conductor: copper wire, without insulation, AWG 22, 0.64 mm Ø nominal<br>Insulation: PE foam, 2.55 mm Ø nominal | |
| Pair | 2 wires according to 4.1 (red, green) to pair stranded, 5.1 mm Ø nominal | |
| Interior sheathing | Plastic foil, 5.2 mm Ø nominal | |
| Shield | a) AL foil, 5.4 mm Ø nominal<br>b) Braiding tin-plated copper, coverage approx. 60 %, 6.0 mm Ø nominal | |
| Outer cladding | PVC YM, 7.8 +/- 0.2 mm Ø nominal | |
| **Electrical characteristics at 20 °C** | | |
| Conductor resistance | < 55 Ω/km | |
| Insulation resistance | > 1 GΩ ● km | |
| Operational capacity | 30 pF/m nominal | |
| Characteristic impedance | 9.6 Khz (RW) | 270 Ω |
| | 38.4 Khz (RW) | 185 Ω |
| | 3-20 Mhz | 150 +/- 15 Ω |
| Attenuation | 9.6 Khz | 2.2 dB/km |
| | 38.4 Khz | 3.4 dB/km |
| | 100 Khz | 4.5 dB/km |
| | 1 Mhz | 11.5 dB/km |
| | 3 Mhz | 18.2 dB/km |
| | 10 Mhz | 33.2 dB/km |
| | 20 Mhz | 48.0 dB/km |
| Test voltage (50 Hz, 1 min.) | Wire/wire | 1.5 $kV_{eff}$ |
| | Wire/shield | 1.5 $kV_{eff}$ |
| **Mechanical and thermal characteristics** | | |
| Temperature range | Stationary | -40 °C to +70 °C |
| | Moving | -20 °C to +70 °C |
| Min. permitted bending radius | Once | 9 x d |
| | Multiple | 18 x d |
| Max. tensile load resistance | Static | 50 N/mm² |
| | Dynamic | 20 N/mm² |
| Suitable for dragline cable carriers | No | |
| Halogen-free | No | |

**Note**

## Ordering data

| | Type | Order No. |
|---|---|---|
| Metre goods | SAIH-PB-2X0.34-PVC | 1933640000 |

**Note**

Mounts behind wall PROFIBUS DP
B-coded, shielded

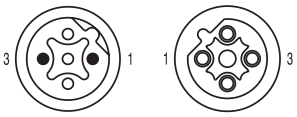


**Male** **Female**

## M12 built-in connector

**Male, straight**

## M12 built-in connector

**Female, straight**

## Technical data

| | | |
|---|---|---|
| Cable gland | PG9, Mounts behind wall | PG9, Mounts behind wall |
| Housing base material | Zinc diecast, nickel-plated | Zinc diecast, nickel-plated |
| Contact socket diameter | M12 | M12 |
| Core cross-section | 0.25 mm² | 0.25 mm² |
| Rated current | 4 A | 4 A |
| Rated voltage | 250 V | 250 V |
| Temperature range of housing | -20...+60 °C | -20...+60 °C |
| Protection degree | IP 68 (when screwed in) | IP 68 (when screwed in) |
| Contact surface | gold-plated | gold-plated |
| Sheath material | PUR halogen-free | PUR halogen-free |
| Tightening torque | 1 Nm (to housing) | 1 Nm (to housing) |

**Note**

## Ordering data

| | |
|---|---|
| PUR halogen-free | 0.5 m |
| PUR halogen-free | 1m |
| PUR halogen-free | 2 m |
| PUR halogen-free | 5 m |

**Note**

| Type | 2-pole Order No. |
|---|---|
| SAIE-M12S-PB-0.5U HW | 1279490050 |
| SAIE-M12S-PB-1.0U HW | 1279490100 |
| SAIE-M12S-PB-2.0U HW | 1279490200 |
| SAIE-M12S-PB-5.0U HW | 1279490300 |

Other versions / Lengths on request

| Type | 2-pole Order No. |
|---|---|
| SAIE-M12B-PB-0.5U HW | 1279480050 |
| SAIE-M12B-PB-1.0U HW | 1279480100 |
| SAIE-M12B-PB-2.0U HW | 1279480200 |
| SAIE-M12B-PB-5.0U HW | 1279480300 |

Other versions / Lengths on request

## Dimensioned drawing

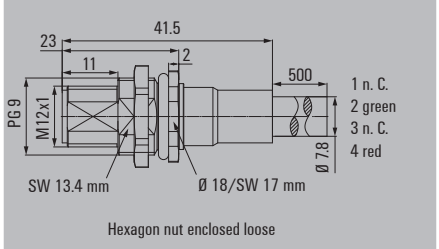


## Dimensioned drawing

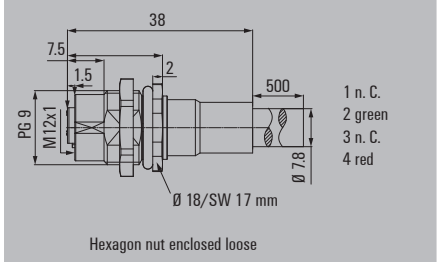

## Tension clamp connection M12, stainless steel B-coded

## SAIS / SAIB VA

**straight**

### Ordering data

| Male | | Type | QTY | Order No. |
|---|---|---|---|---|
| | 5-pole. PG 9 | SAIS 5/9-VA-B-COD | 1 | 1920720000 |
| **Socket** | | | | |
| | 5-pole. PG 9 | SAIB 5/9-VA-B-COD | 1 | 1920730000 |
| **Note** | | | | |

### Technical data

| | |
|---|---|
| Type of connection | Tension clamp connection |
| Housing main material | 1.4404/316L |
| Contact tube diameter | M12 |
| Cable diameter | 6...8 mm (PG9) |
| Wire cross-section, min. / max. | 0.25...0.5 mm² |
| Rated current | 4 A |
| Rated voltage | 125 V |
| Temperature range of housing | -25...+85 °C |
| Protection degree | IP 69K |
| Contact surface | Gold-plated |
| **Note** | PB = PROFIBUS (B-COD)Torque, see E.12 |

### Dimensioned drawing

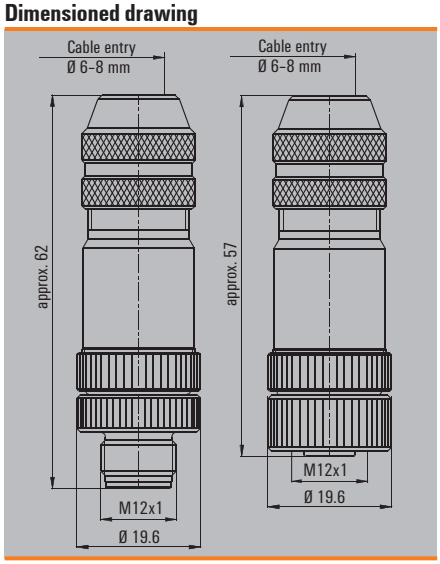


PB = PROFIBUS (B-COD)Torque, see E.12

## Screw connection M12, metal (EMC)
## B-coded

Industrial Ethernet

### SAISM / SAIBM

straight

### SAISW / SAIBW

Angled

## Ordering data

| Male | | Type | Qty. | Order No. | Type | Qty. | Order No. |
|---|---|---|---|---|---|---|---|
| | 5-pole. PG 9 | SAISM 5/8S M12 5P B-COD | 1 | 1784790000 | SAISW-M-5/8 M12 B-COD | 1 | 1944570000 |
| **Socket** | | | | | | | |
| | 5-pole. PG 9 | SAIBM 5/8S M12 5P B-COD | 1 | 1784780000 | SAIBW-M-5/8 M12 B-COD | 1 | 1944580000 |
| **Note** | | | | | | | |

## Technical data

| | | |
|---|---|---|
| Type of connection | Screw connection | Screw connection |
| Housing main material | CuZn | CuZn |
| Contact tube diameter | M12 | M12 |
| Cable diameter | 6...8 mm (PG9) | 6...8 mm (PG9) |
| Wire cross-section, min. / max. | 0.14...0.75 mm² | 0.14...0.75 mm² |
| Rated current | 4 A | 4 A |
| Rated voltage | 125 V | 125 V |
| Temperature range of housing | -25...+85 °C | -25...+85 °C |
| Protection degree | IP 67 | IP 67 |
| Contact surface | Gold-plated | Gold-plated |
| **Note** | Torque, see E.12 | Torque, see E.12 |

Torque, see E.12

### Dimensioned drawing

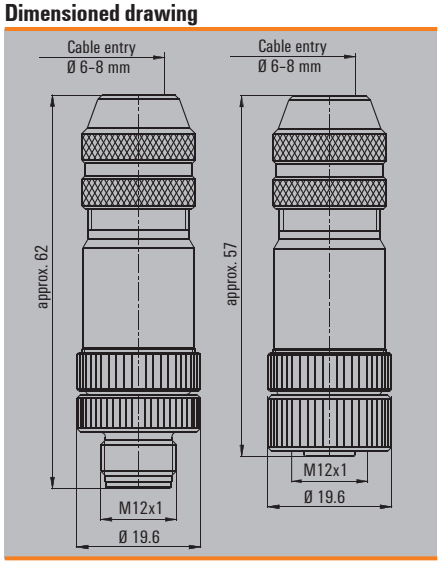


### Dimensioned drawing

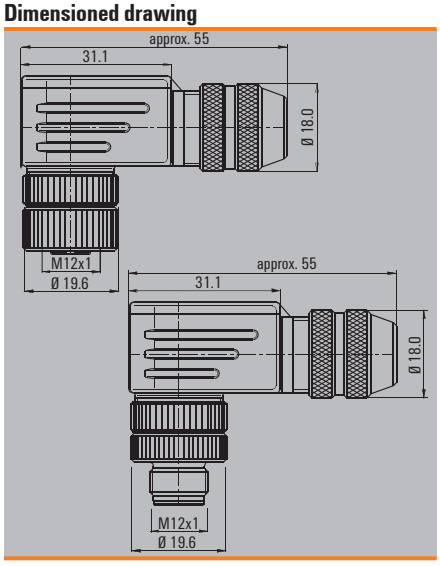

**IDC connection**
**B-coded**

Industrial Ethernet

## SAIS / SAIB

**straight**

## Ordering data

| Male | | Type | Qty. | Order No. |
|---|---|---|---|---|
| | 3-pole. PG 9 | SAIS-3-IDC-M12B-COD | 1 | 1864730000 |
| **Socket** | | | | |
| | 3-pole. PG 9 | SAIB-3-IDC-M12B-COD | 1 | 1864740000 |
| **Note** | | | | |

## Technical data

| | |
|---|---|
| Type of connection | Insulation displacement connection |
| Housing main material | CuZn |
| Contact tube diameter | M12 |
| Cable diameter | 7...8.8 mm |
| Wire cross-section, min. / max. | 0.34...0.75 mm² |
| Rated current | 4 A |
| Rated voltage | 32 V |
| Temperature range of housing | -25...+85 °C |
| Protection degree | IP 67 |
| Contact surface | tinned |
| **Note** | PB = PROFIBUS (B-COD)<br>IE = Industrial Ethernet (D-COD) |

## Dimensioned drawing

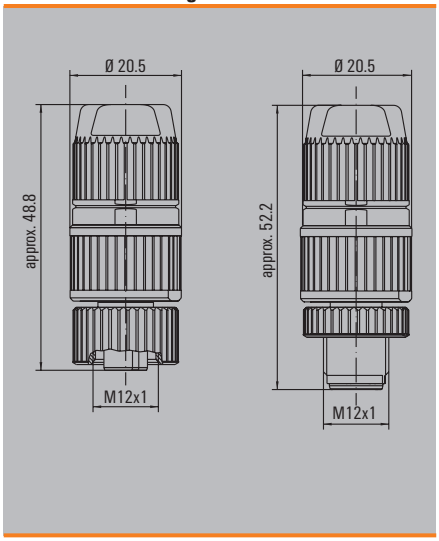


PB = PROFIBUS (B-COD)
IE = Industrial Ethernet (D-COD)

# Sub-D

This compact connector provides a convenient bus connection for all standardised PROFIBUS-DP devices. A data transmission rate of max. 12 Mbps is possible. An additional Sub-D connector on top of the plug enables analysis/programming devices to be connected without modifying the wiring.

The 9-pin sub-D connector is available in four versions:

1. without terminating resistor
2. with built-in terminating resistor
3. with switch in terminating resistor and connection for programming unit via IDC connection
4. with switch in terminating resistor and connection for programming unit via tension clamp connection.

- T-piece functions
- Good shield contact
- Ample space for connecting the bus cable
- Cable entry can be closed off with blanking panel
- Fully insulated housing
- Reliable strain relief

## PB-DP SUB-D

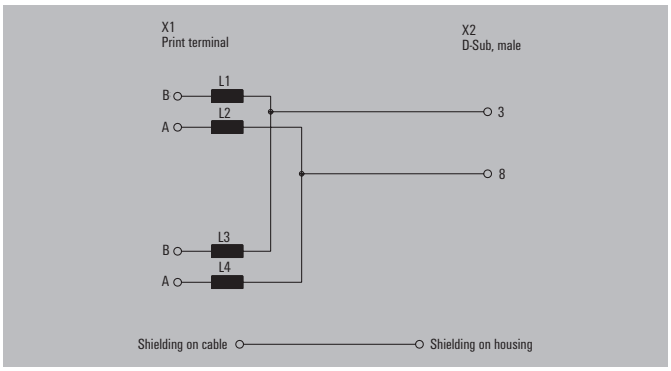


## Technical data

| | | |
|---|---|---|
| Data transmission rate | | max. 12 Mbps |
| ESD | | protection to IEC 801-2 |
| Operating temperature | °C | 0 ... 60 |
| Storage temperature | °C | -25 ... +80 |
| Ingress protection class | | IP 40 |
| Dimensions (LxWxH) | mm | 64.6 x 47.5 x 16 |
| Housing material | | PC UL 94 V-1 |
| Plug-in connector | | sub-D 9-pin |
| Cable connection | | 2 No. horizontal |
| Cable diameter mm | mm | 4.5 ... 8 |
| Single conductor cross-section | $mm^2$ | rigid max. 1.5 |
| | | flexible max. 1.0 |
| Type of connection | Screw | 8395500000 and 8460860000 |
| | IDC | 1916980000 |
| | Tension clamp | 1934200000 |
| **Note** | | |

## Ordering data

| Type | Qty. | Order No. |
|---|---|---|
| PB-DP SUB-D | 1 | **8395500000** |

# Sub-D

## PB-DP SUB-D TERM

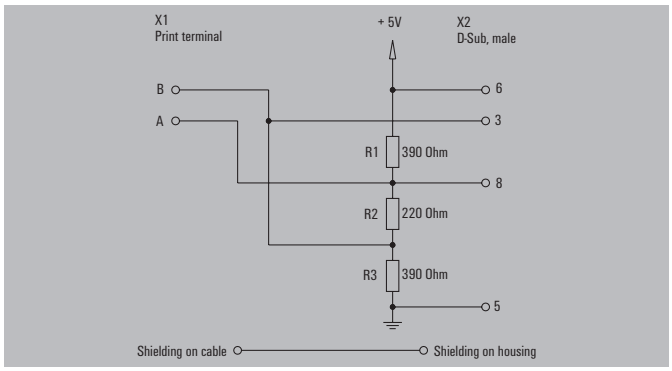


### Ordering data

| Type | Qty. | Order No. |
|---|---|---|
| PB-DP SUB-D TERM | 1 | 8460860000 |

## PB-DP SUB-D IDC/ZF TERM PS

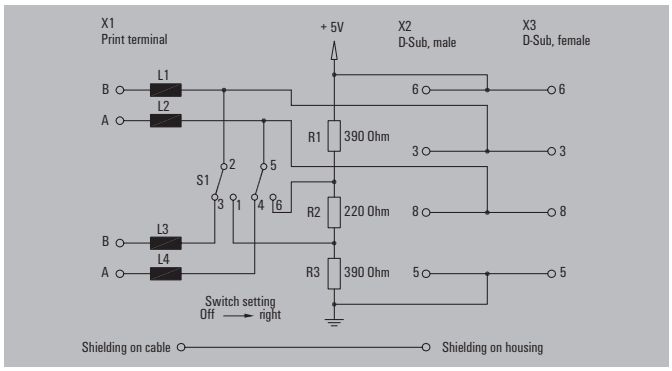


### Ordering data

| Type | Qty. | Order No. |
|---|---|---|
| PB-DP SUB-D IDC TERM PS | 1 | 1919680000 |
| PB-DP SUB-D ZF TERM PS | 1 | 1934200000 |

## PROFIBUS Sub-D connector with M12 (90°)

Weidmüller's new Sub-D product line features fully shielded connector variants that enable direct tapping with M12 cables. This allows you to avoid the types or errors that often occur when installing similar connectors with screw connections. The increased contact reliability of the Sub-D connectors more than compensates for the cost of the extra M12 connectors.

### Special features:

- Complete shielded housing
- Compact housing for small places
- Connection without any mistakes because of the M12 connector
- 100 % certified components

### PB-DP SUB-D M12 TERM

**PROFIBUS-Connector 90° M12 with switch, without programming connector**

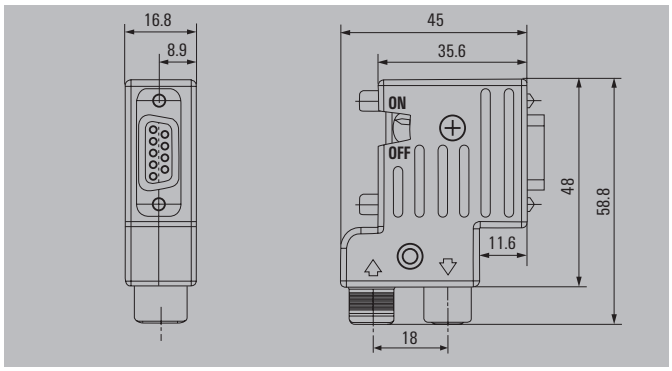


### Technical data

| | |
|---|---|
| Data rate | acc. to PROFIBUS Specification, 12 Mbit/s |
| Connector pinning | acc. to PROFIBUS Specification |
| PROFIBUS DP connector | D-Sub 9-pole, male |
| PROFIBUS DP program connector | D-Sub 9-pole, female |
| PROFIBUS cable connector | M12 B coded, male + female, Pin 2 and 4, connected, Cable output: M12 female, Cable entry: M12 male |
| Mechanical lifetime | 200 connections |
| Temperature range | -20 °C to +70 °C |
| Permissible humidity | Max. 75 % at +25 °C, non-condensing |
| Ingress protection class | IP 30 |
| Housing material | ZnAl |
| D-Sub screw connection | UNC 4-40 |

**Note**

### Ordering data

| Type | Qty. | Order No. |
|---|---|---|
| PB-DP SUB-D M12 TERM | 1 | 1140650000 |

## PROFIBUS Sub-D connector with M12 (90°)

### PB-DP SUB-D M12 TERM PS

**PROFIBUS-Connector 90° M12 with switch, with programming connector**

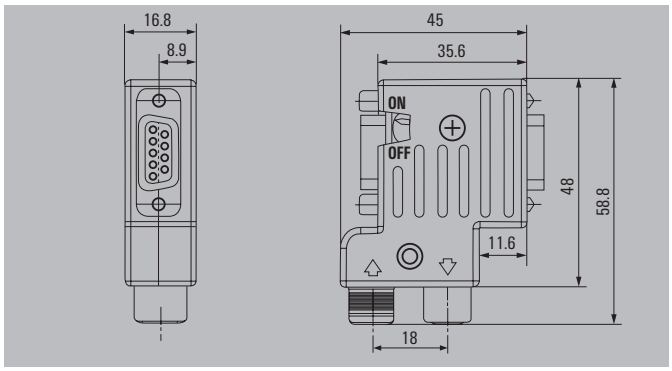


### Ordering data

| Type | Qty. | Order No. |
|---|---|---|
| PB-DP SUB-D M12 TERM PS | 1 | 1140640000 |

## PROFIBUS Sub-D Connector with tension clamp connection (35°)

The new Sub-D Family from Weidmüller offers a fully shielded version.

**Special features:**

- Completely shielded housing
- Compact design for use in small spaces

### PB-DP SUB-D ZF35TERM

**PROFIBUS-Connector 35° with switch, without programming connector**

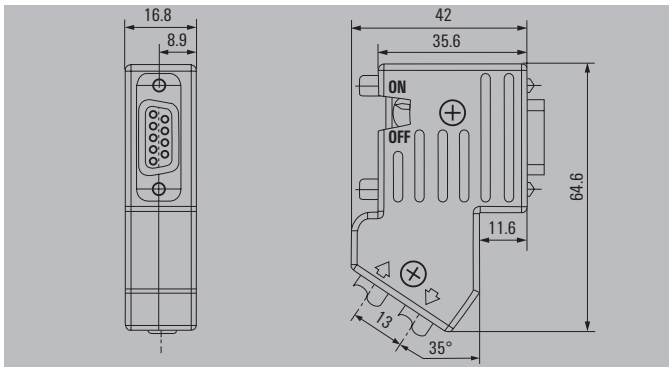


### Technical data

| | |
|---|---|
| Data rate | acc. to PROFIBUS Specification, 12 Mbit/s |
| Connector pinning | acc. to PROFIBUS Specification |
| PROFIBUS DP connector | D-Sub 9-pole, male |
| PROFIBUS DP program connector | D-Sub 9-pole, female |
| PROFIBUS cable connector | Tension clamp |
| Mechanical lifetime | 200 mating cycles |
| Temperature range | -20 °C to +70 °C |
| Permissible humidity | Max. 75 % at +25 °C, non-condensing |
| Ingress protection class | IP 30 |
| Housing material | ZnAl |
| D-Sub screw connection | UNC 4-40 |

**Note**

### Ordering data

| Type | Qty. | Order No. |
|---|---|---|
| PB-DP SUB-D ZF35TERM | 1 | 1173220000 |

## PROFIBUS Sub-D Connector with tension clamp connection (35°)

### PB-DP SUB-D ZF35TERM PS

**PROFIBUS-Connector 35° with switch, with programming connector**

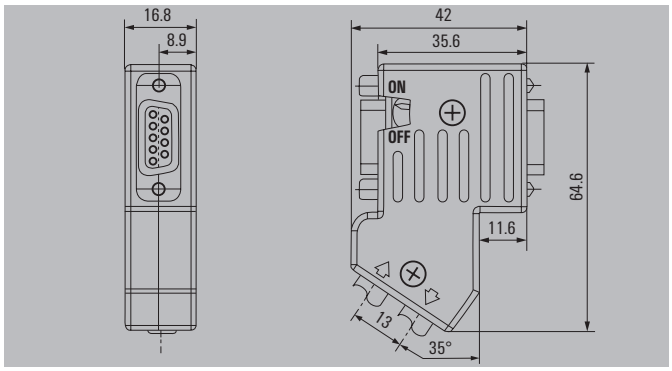


### Ordering data

| Type | Qty. | Order No. |
|---|---|---|
| PB-DP SUB-D ZF35TERM PS | 1 | 1173240000 |

## PROFIBUS Sub-D Connector with tension clamp connection (90°)

The new Sub-D Family from Weidmüller offers a fully shielded Version.

**Special features:**

- Completely shielded housing
- Compact design for use in small spaces

### PB-DP SUB-D ZF

**PROFIBUS-Connector 90° without switch, without programming connector**

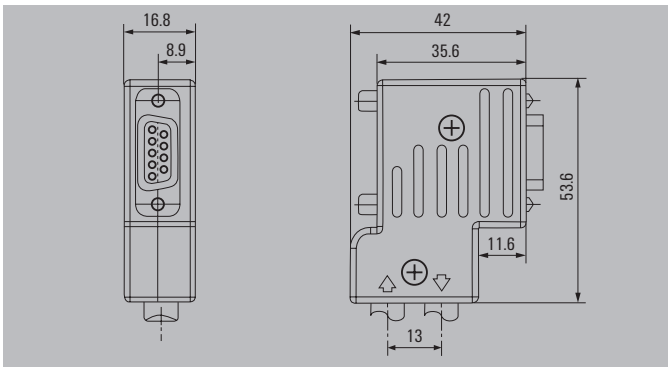


### Technical data

| | |
|---|---|
| Data rate | acc. to PROFIBUS Specification, 12 Mbit/s |
| Connector pinning | acc. to PROFIBUS Specification |
| PROFIBUS DP connector | D-Sub 9-pole, male |
| PROFIBUS DP program connector | D-Sub 9-pole, female |
| PROFIBUS cable connector | Tension clamp |
| Mechanical lifetime | 200 mating cycles |
| Temperature range | -20 °C to +70 °C |
| Permissible humidity | Max. 75 % at +25 °C, non-condensingg |
| Ingress protection class | IP 30 |
| Housing material | ZnAl |
| D-Sub screw connection | UNC 4-40 |

| Note | |
|---|---|

### Ordering data

| Type | Qty. | Order No. |
|---|---|---|
| PB-DP SUB-D ZF | 1 | 1161890000 |

## PROFIBUS Sub-D Connector with tension clamp connection (90°)

### PB-DP SUB-D ZF TERM

**PROFIBUS-Connector 90° with switch, without programming connector**

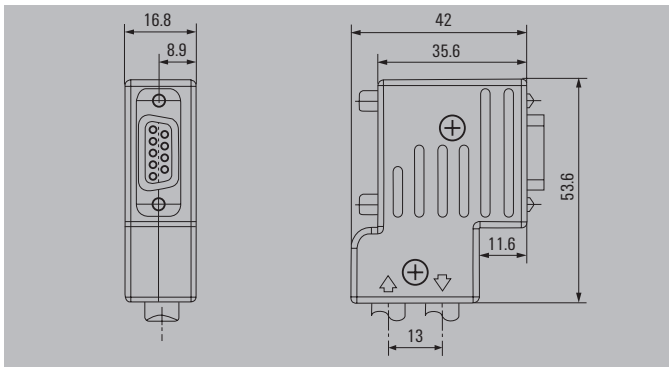


**Ordering data**

| Type | Qty. | Order No. |
|---|---|---|
| PB-DP SUB-D ZF TERM | 1 | 1161870000 |

### PB-DP SUB-D ZF TERM PS

**PROFIBUS-Connector 90° with switch, with programming connector**

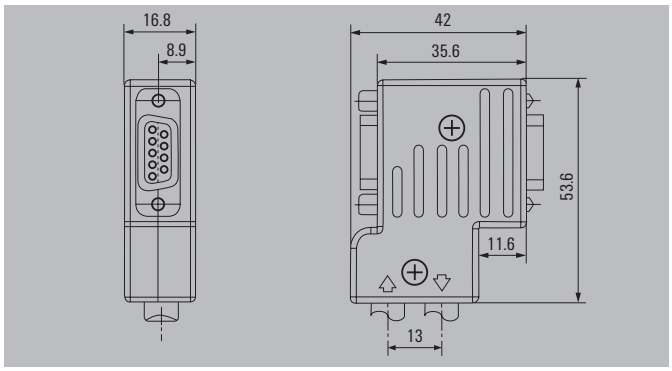


**Ordering data**

| Type | Qty. | Order No. |
|---|---|---|
| PB-DP SUB-D ZF TERM PS | 1 | 1161880000 |

# PROFIBUS-DP distributors

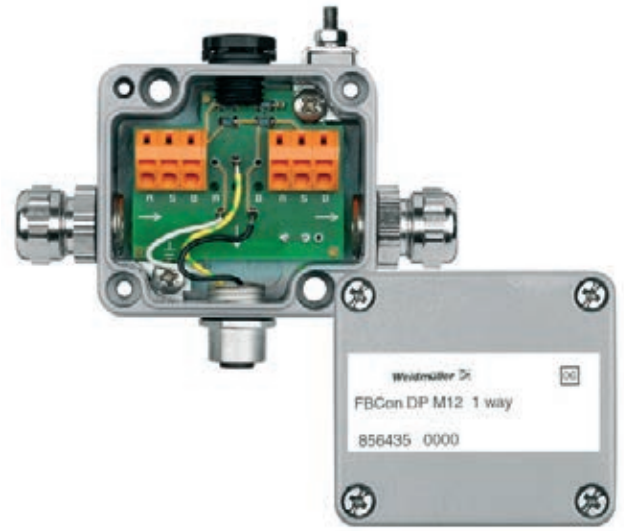


## PROFIBUS-DP distributor

The PROFIBUS-DP topology is a line structure. The spur (T-distributor) connects the individual field devices or remote I/Os to the bus cable. The length of the spur cable depends on the transmission rate and should be as short as possible. The total of all spur lengths for transmission rates up to 1.5 MBaud may not exceed max. 6.6 m. The trunk cable passes through an EMC cable gland into an aluminium or stainless steel enclosure where it is connected to a tension clamp terminal. The spur line to the device is connected using a B-coded M12 socket or an EMC cable gland. Terminating resistors must be wired onto the start and end of the PROFIBUS-DP network. The Terminator modules can take care of this task. The electrically isolated 24 V DC power supply for the bus terminator is routed into the cable gland on the right side. The housing features a pressure-compensation mechanism that counters the effects of climatic fluctuations. The guidelines issued by the PROFIBUS user organisation must be observed.

## PROFIBUS-DP

### Technical data

| | |
|---|---|
| Operating temperature | –25 °C to 55 °C |
| Ingress protection class | IP 66 |
| Enclosure material | High grade aluminium alloy (AL – SI 12) |
| Finish | Painted RAL 7001 |
| PROFIBUS-DP connection | Tension clamp terminals 0.5 – 1.5 mm² |
| Cable entry | Cable gland M16 |
| Cable gland clamping range | 5.5 – 9.5 mm |
| Contact surface | M12 plug/socket CuZnAu |
| Transmission rate | Max. 1.5 MBaud |
| Power supply bus connection | Bus terminator 24 VDC +/–10 % |
| Trunk cable via cable gland | |

### Installation advice

| | |
|---|---|
| Torques | |
| M16 cable gland at enclosure | 6.0 Nm |
| Union nut, M16 cable gland | 4.0 Nm |
| Enclosure cover | 1.8 – 2.0 N |
| External earthing cable | 1.8 – 2.0 Nm |
| Adaptor/stud cable | 0.5 Nm |

### Pin assignment

| Pin no. | Connection | Wire colour |
|---|---|---|
| Pin 1 | unassigned | |
| Pin 2 | RxDx/TxD-N / A-wire | green |
| Pin 3 | unassigned | |
| Pin 4 | RxDx/TxD-N / B-wire | red |
| Pin 5 | shield | |
| Cable gland | shield | |

### Socket B-coded

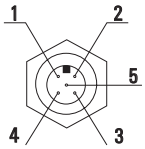

## 1-channel distributor

**Cable gland**

## Ordering data

| Type | Cable gland | QTY | Order No. |
|---|---|---|---|
| **Aluminium housing** | | | |
| FBCon DP CG 1way | branch line CG | 1 | **8564340000** |
| **Stainless steel enclosure** | | | |
| FBCon SS DP PCG 1way | all connections PCG | 1 | **8714260000** |

CG = brass cable gland
PCG = plastic cable gland

## Dimensioned drawing

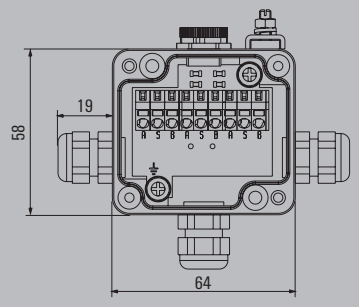


## Wiring diagram

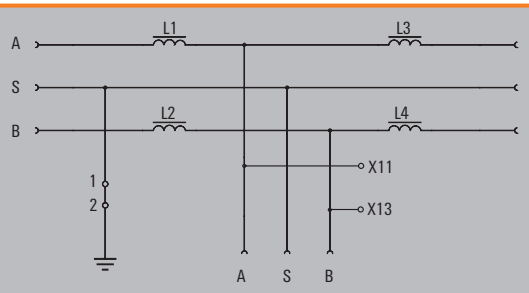


## 1-channel distributor

**M12 connection**

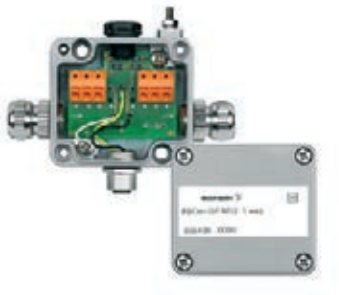

## Ordering data

| Type | Cable gland | QTY | Order No. |
|---|---|---|---|
| **Aluminium housing** | | | |
| FBCon DP M12 1way | branch line M12 | 1 | **8564350000** |
| **Stainless steel enclosure** | | | |
| FBCon SS DP M12 1way | branch line M12 | 1 | **8714270000** |

CG = brass cable gland
PCG = plastic cable gland

## Dimensioned drawing

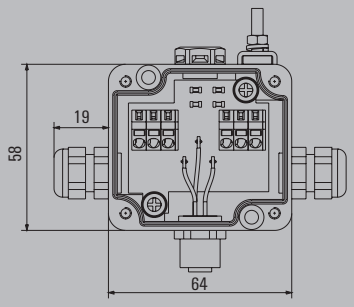


## Wiring diagram

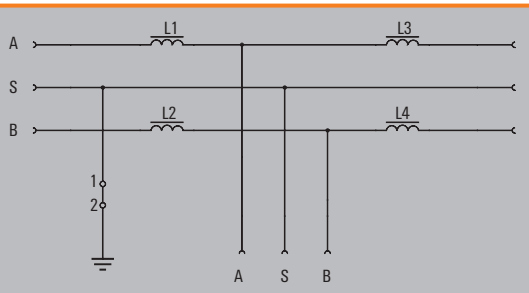

# PROFIBUS-DP - FBCon T-distributor

## Terminator

**Cable gland**

## Terminator

**M12 connection**

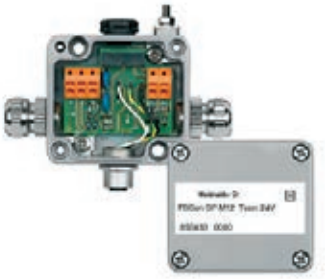

## Ordering data

| Type | Cable gland | QTY | Order No. |
|---|---|---|---|
| **Aluminium housing** | | | |
| FBCon DP CG Term 24V | branch line CG | 1 | **8564290000** |
| **Stainless steel enclosure** | | | |
| FBCon SS DP PCG Term 24V | all connections PCG | 1 | **8714240000** |

CG = brass cable gland
PCG = plastic cable gland

## Ordering data

| Type | Cable gland | QTY | Order No. |
|---|---|---|---|
| **Aluminium housing** | | | |
| FBCon DP M12 Term 24V | branch line M12 | 1 | **8564330000** |
| **Stainless steel enclosure** | | | |
| FBCon SS DP M12 Term 24V | branch line M12 | 1 | **8714250000** |

## Dimensioned drawing

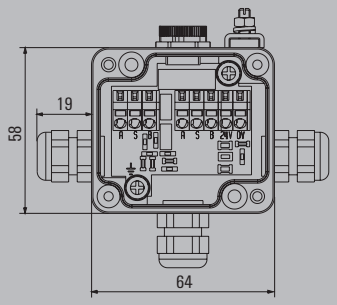


## Dimensioned drawing

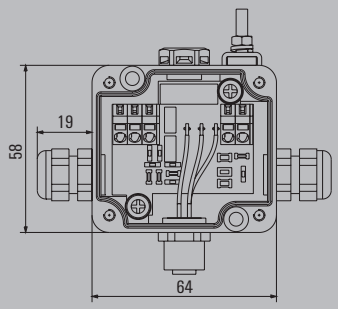


## Wiring diagram

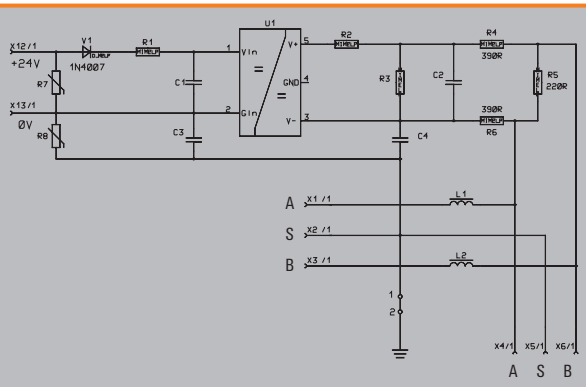


## Wiring diagram

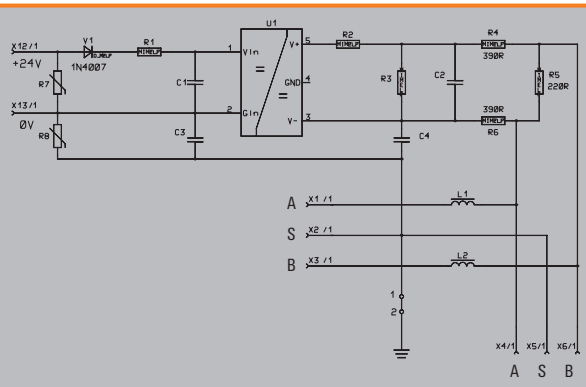

# PROFIBUS-DP IP 20 T-distributor

The distributor for PROFIBUS-DP enables the user to connect it conveniently in the electrical cabinet. It can be mounted on TS 32/35 rails and used to connect standardised PROFIBUS-DP lines. Spur cables can also be connected. Please note that spur cables should be kept as short as possible. Part No. 8788580000 has a 9-pin Sub-D socket for connecting analysis/programming devices.

- T-piece functions
- Good shield contact
- Ample space for connecting the bus cable
- TS 32/35 terminal rail mounting
- Standardised Sub-D connection for PROFIBUS-DP

## RS PB-DP T

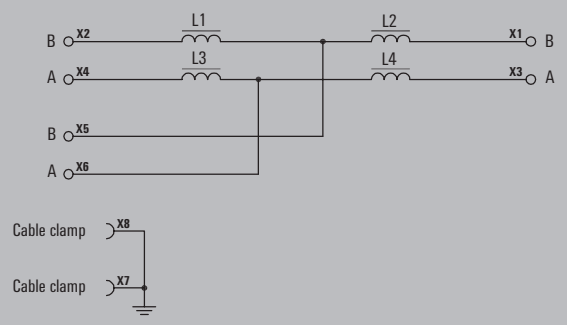


## RS PB-DP T SUB-D

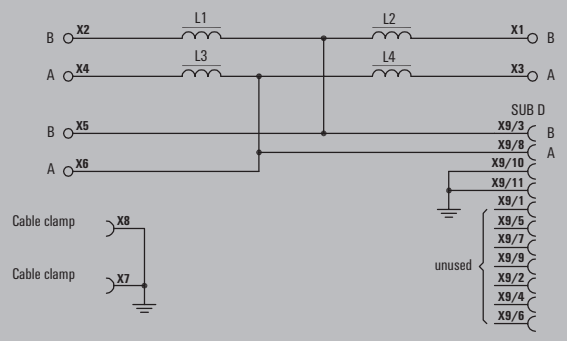


## Technical data

| | | |
|---|---|---|
| Data transmission rate | | max. 1.5 Mbps (with max. 6.6 m spur line)<br>max. 12 Mbps (no spur lines) |
| Operating temperature | °C | 0 ... 55 |
| Storage temperature | °C | -25 ... +70 |
| Ingress protection class | | IP 20 |
| Dimensions (LxWxH) | mm | 70 x 45 x 42 |
| Plug-in connector | | sub-D 9-pin |
| Cable diameter | mm | 4.5 ... 8 |
| Single conductor cross-section | $mm^2$ | 0.5 ... 2.5 |
| Type of connection | | screw |

**Note**

## Ordering data

| Type | Qty. | Order No. |
|---|---|---|
| RS PB-DP T | 1 | 8800040000 |
| RS PB-DP T SUB-D | 1 | 8788580000 |

**The PROFIBUS-PA** is an open fieldbus standard (EN 50170, IEC 1158-2, DIN 19245). It was specifically designed for the requirements of process engineering, such as remote powering and intrinsic safety. The PROFIBUS-PA enables operation of several PA sensors and actuators on one bus line.
The devices are powered using twin cable technology, and the transmission of process data is digital.

Integration in the PROFIBUS-DP network is done by means of a segment coupler.

Specific advantages of PROFIBUS-PA:
- Low wiring costs
- Minimal planning costs for the process control system
- Remote interrogation or programming of the field device
- Further development and support by the PROFIBUS User Organisation

Whether for servicing or system modification, the PROFIBUS-PA FB connectors from Weidmüller enable connection or replacement of field devices without interrupting the bus system.

An extensive range of accessories, such as pre-assembled cables are also available.

**PROFIBUS-PA cables**

**PROFIBUS-PA connectors**

**Profibus PA distributors**

## PROFIBUS-PAcables
## One end without connector

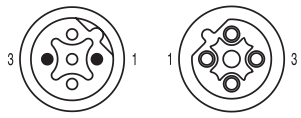


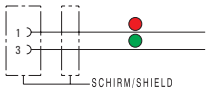


### Ordering data

| Type | | Order No. |
|---|---|---|
| **Male, straight** | | |
| PVC blue | 1.0 m | FBCEX PA M12 M 1M **1785150100** |
| PVC black | 1.0 m | FBC PA M12 M 1M **1785120100** |
| **Male, angled** | | |
| PVC blue | 1.0 m | FBCEX PA M12 MA 1M **1076580100** |
| PVC black | 1.0 m | FBC PA M12 MA 1M **1076540100** |
| **Female, straight** | | |
| PVC blue | 1.0 m | FBCEX PA M12 FM 1M **1785140100** |
| PVC black | 1.0 m | FBC PA M12 FM 1M **1785110100** |
| **Female, angled** | | |
| PVC blue | 1.0 m | FBCEX PA M12 FMA 1M **1076520100** |
| PVC black | 1.0 m | FBC PA M12 FMA 1M **1076530100** |
| **Note** | | |

### Wall bushing

### Ordering data

| Type | Length | Qty. | Order No. |
|---|---|---|---|
| SAI-WDF-5P M12 60 mm | 60 mm | 1 | **1819450000** |

### Standard cable lengths

| | | |
|---|---|---|
| All cables listed under the ordering data have a length of 1.5 metres. The last four ordering digits must be changed when ordering other standard cable lengths. | 1.0 m | xxxxxx0100 |
| | 2.0 m | xxxxxx0200 |
| | 5.0 m | xxxxxx0500 |
| | 10.0 m | xxxxxx1000 |

### Technical data

| | |
|---|---|
| Sheathing colour | blue (RAL 5015) |
| Protection degree | IP 67 |
| Core cross-section | 1 mm² |
| Contact surface | gold-plated |
| Temperature range of housing | -25...+85 °C |

Chapter W includes additional technical specifications for the cable

### Dimensioned drawing

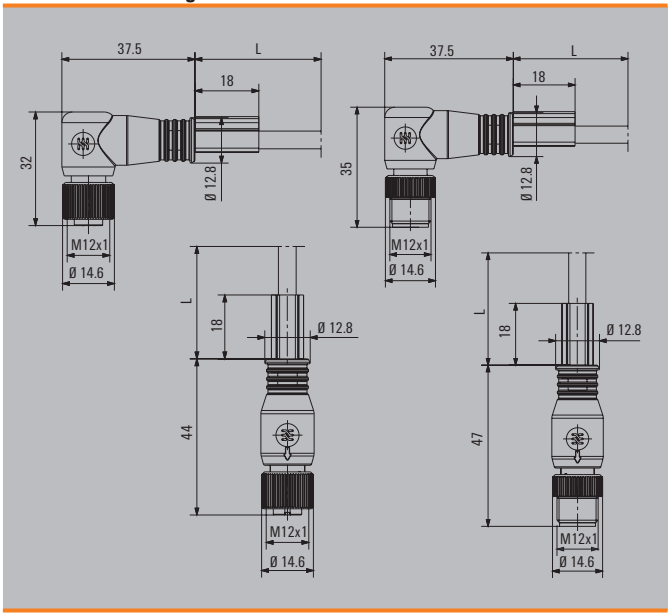

## PROFIBUS-PAcables

### Connecting line

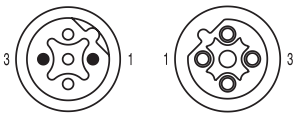


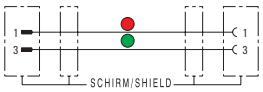


### Ordering data

| Type | | Order No. |
|---|---|---|
| **Male, straight - Female, straight** | | |
| PVC blue | 1.0 m | FBCEX PA M12 M-FM 1M **1785130100** |
| PVC black | 1.0 m | FBC PA M12 M-FM 1M **1785100100** |
| **Male, straight - Female, angled** | | |
| PVC blue | 1.0 m | FBCEX PA M12 M-FMA 1M **1075390100** |
| PVC black | 1.0 m | FBC PA M12 M-FMA 1M **1075620100** |
| **Male, angled - Female, angled** | | |
| PVC blue | 1.0 m | FBCEX PA M12 MA-FMA 1M **1075410100** |
| PVC black | 1.0 m | FBC PA M12 MA-FMA 1M **1076550100** |
| **Male, angled - female, straight** | | |
| PVC blue | 1.0 m | FBCEX PA M12 MA-FM 1M **1075450100** |
| PVC black | 1.0 m | FBC PA M12 MA-FM 1M **1075460100** |
| **Note** | | |

### Wall bushing

### Ordering data

| Type | Length | Qty. | Order No. |
|---|---|---|---|
| SAI-WDF-5P M12 60 mm | 60 mm | 1 | **1819450000** |

### Standard cable lengths

| | | |
|---|---|---|
| All cables listed under the ordering data have a length of 1.5 metres. The last four ordering digits must be changed when ordering other standard cable lengths. | 1.0 m | xxxxxx0100 |
| | 2.0 m | xxxxxx0200 |
| | 5.0 m | xxxxxx0500 |
| | 10.0 m | xxxxxx1000 |

### Technical data

| | |
|---|---|
| Sheathing colour | blue (RAL 5015) |
| Protection degree | IP 67 |
| Core cross-section | 1 mm² |
| Contact surface | gold-plated |
| Temperature range of housing | -25...+85 °C |

Chapter W includes additional technical specifications for the cable

### Dimensioned drawing

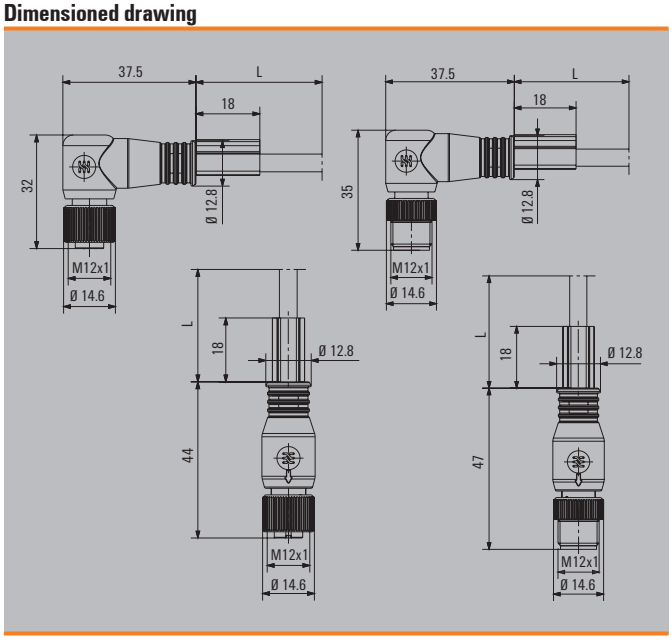

## PROFIBUS-PA bulk lengths

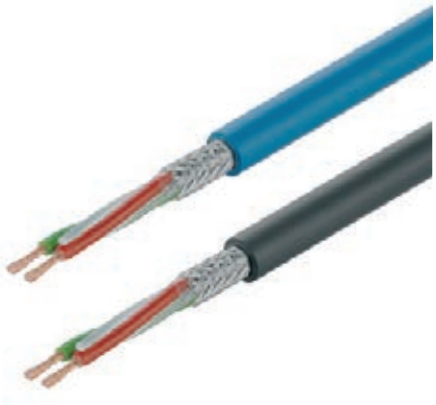

## Technical data

| PROFIBUS-PA bulk lengths | | |
|---|---|---|
| Application | | • Fieldbus cable for PROFIBUS-PA field networks in accordance with IEC 1158-2<br>• The cable is suitable for installation in both dry and humid spaces. When used with the black, UV-resistant cladding, it can also be installed outdoors. |
| General characteristics | | None of the materials used for the cables during production are detrimental to paint adhesion **(they are LBS-free).**<br>**LBS** = Materials detrimental to paint adhesion |
| **Assembly** | | |
| Conductor | | Copper wire, without insulation, 1.0 $mm^2$, finely stranded |
| Insulating sleeve | | Foam skin (02YS), wire Ø approx. 2.55 mm<br>Wire colours: red and green |
| Stranding | | 2 wires with 2 drain wires approx. 1.0 mm Ø stranded |
| Wrapping | | 1 layer insulation foil |
| Shield | | Braiding made from tin-plated copper wire,<br>Coverage 85 % ± 5 |
| Outer cladding | | PVC, blue RAL 5015 or black<br>Outer diameter: 8.0 mm ± 0.4 |
| **Electrical characteristics at 20 °C** | | |
| Wire resistance (loop) | | max. 44 Ω/km |
| Insulation resistance | | min. 5 GΩ x km |
| Working capacity at 800 Hz | | nom. 52 nF/km |
| Inductance at 800 Hz | | approx. 0.4 mH/km |
| Characteristic impedance | at 31.25 kHz | 100 Ω ± 20 % |
| | at ≥ 1 MHz | nom. 80 Ω |
| Wave attenuation | at 39 kHz | max. 0.3 dB/100 m |
| | at 100 kHz | nom. 0.35 dB/100 m |
| | at 1 MHz | nom. 1.2 dB/100 m |
| Signal dispersion speed | | nom. 79 % |
| Coupling resistance at < 30 MHz | | max. 250 mOhm/m |
| Operating voltage (not for three-phase use) | | Peak value 100 V |
| Test voltage | Wire/wire | $U_{eff.}$ 1500 V |
| | Wire/shield | $U_{eff.}$ 1500 V |
| **Mechanical and thermal characteristics** | | |
| Min. bending radius stationary installed / during installation | | 65 mm |
| Temperature range during installation | | -5 °C to +60 °C |
| Temperature range stationary installed | | -30 °C to +80 °C |
| Flammability | | Flame retardant in accordance with VDE 0482, part 265-2-1 / IEC 60 332-1 |

**Note**

## Ordering data

| Type | Order No. |
|---|---|
| SAIH-PB-PA-2X1.0-PVC-BL | 1232630000 |
| SAIH-PB-PA-2X1.0-PVC-SW | 1232640000 |

**Note**

## Tension clamp connection M12, stainless steel A-coded

## SAIS / SAIB VA

**straight**

### Ordering data

| Type | QTY | Order No. |
|---|---|---|
| **Male** | | |
| 5-pole. PG 9 | | |
| SAIS 5/9-VA | 1 | 1920700000 |
| **Socket** | | |
| 5-pole. PG 9 | | |
| SAIB 5/9-VA | 1 | 1920710000 |
| **Note** | | |

### Technical data

| | |
|---|---|
| Type of connection | Tension clamp connection |
| Housing main material | 1.4404/316L |
| Contact tube diameter | M12 |
| Cable diameter | 6...8 mm (PG9) |
| Wire cross-section, min. / max. | 0.25...0.5 mm² |
| Rated current | 4 A |
| Rated voltage | 125 V |
| Temperature range of housing | -25...+85 °C |
| Protection degree | IP 69K |
| Contact surface | Gold-plated |
| **Note** | PB = PROFIBUS (B-COD)Torque, see E.12 |

### Dimensioned drawing

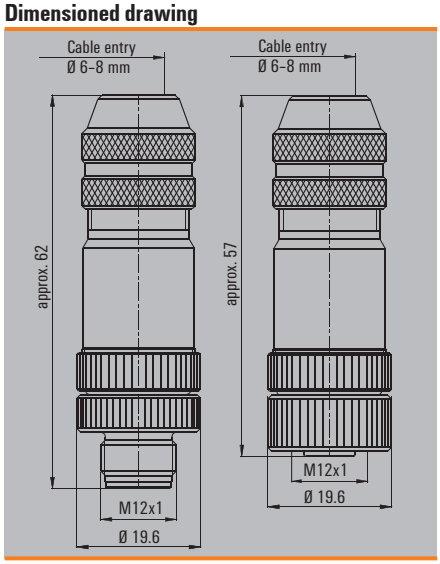


PB = PROFIBUS (B-COD)Torque, see E.12

## M12 screw connection, metal (shielded)
## A-coded

### FBCon / SAIS

**straight**

### SAISW / SAIBW

**Angled**

## Ordering data

| Male | | Type | Qty. | Order No. | Type | Qty. | Order No. |
|---|---|---|---|---|---|---|---|
| | 4-pole. PG 9 | FBCon M12 4P M EMC | 1 | **9455640000** | SAISW-M-4/8 M12 | 1 | **1803930000** |
| | 5-pole. PG 9 | SAIS-M-5/8S M12 5P A-COD | 1 | **1784740000** | SAISW-M-5/8 M12 | 1 | **1803940000** |
| **Socket** | | | | | | | |
| | 4-pole. PG 9 | FBCon M12 4P FM EMC | 1 | **8426220000** | SAIBW-M-4/8 M12 | 1 | **1803910000** |
| | 5-pole. PG 7 | SAIB-5/6S M12 5P A-COD | 1 | **1191020000** | | | |
| | 5-pole. PG 9 | SAIB-M-5/8S M12 5P A-COD | 1 | **1784750000** | SAIBW-M-5/8 M12 | 1 | **1803920000** |
| **Note** | | Other versions on request | | | Other versions on request | | |

## Technical data

| | | |
|---|---|---|
| Type of connection | Screw connection | Screw connection |
| Housing main material | CuZn | CuZn |
| Contact tube diameter | M12 | M12 |
| Cable diameter | 4...6 mm (PG7)/ 6...8 mm (PG9) | 6...8 mm (PG9) |
| Wire cross-section, min. / max. | 0.25...0.75 mm² | 0.14...0.5 mm² |
| Rated current | 4 A | 4 A |
| Rated voltage | 250 V | 125 V |
| Temperature range of housing | -25...+85 °C | -25...+85 °C |
| Protection degree | IP 67 | IP 67 |
| Contact surface | Gold-plated | Gold-plated |
| **Note** | Torque, see E.12 | Torque, see E.12 |

Torque, see E.12

## Dimensioned drawing

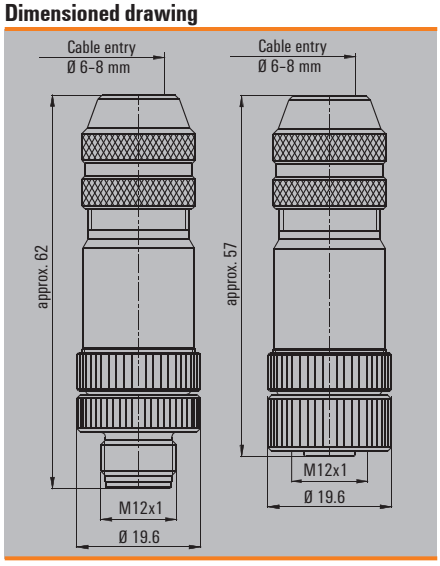


## Dimensioned drawing

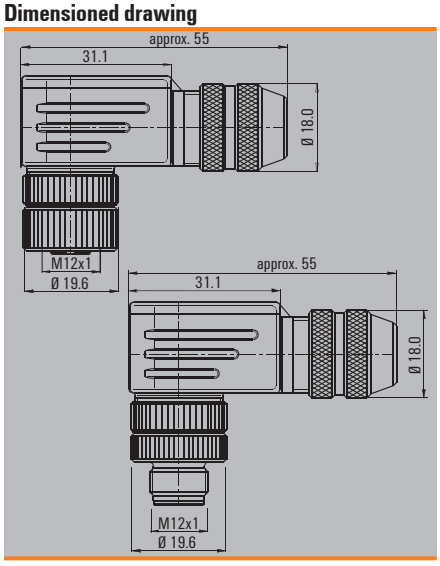

## Positioning plug connector

## Positioning plug connector

## Technical data

| | | |
|---|---|---|
| No. of poles | 4 | 4/5 |
| Version | pin | pin |
| Temperature range | -40 °C ... 85 °C | -40 °C ... 85 °C |
| Housing material | stainless steel (VA) | Cu Zn nickel surface |
| Connection thread | PG 9 | PG 13.5 / M 20 |
| Plug thread | M12 | M12 |
| Strand cross-section | 0.34 $mm^2$ | 0.34 $mm^2$ |
| Housing class of protection to DIN 40050 IEC 529 | IP 67 | IP 67 |
| Strand length (fitted with wire-end ferrules) | 500 mm | 150/300 mm |
| Nominal current per contact | 4 A | 4 A |
| Rated voltage | 250 V | 125 V 5-pole/250 V 4-pole |
| Contact surface | gold-plated | CuZnAu |
| Type of connection | screw | screw |
| Flammability class to UL-94 | | V-2 |
| Nominal voltage to VDE standard 0110/ISO Group C | | 125 V ~ 150 V = |
| Resistance to creepage | | KC 600 |
| Contact resistance to IEC 512 Part 2 | | ≤ 8 mΩ |
| Insulation resistance to IEC 512 Part 2 | | ≥ $10^{12}$ Ω |
| **Note** | | |

## Ordering data

| | Type | Qty. | Order No. |
|---|---|---|---|
| Positioning plug connector PG9 500 mm | SAIE-M12S-4-0.5U-AEH-VA | 1 | **1861220001** |
| Adapter PG9 / M20 | SAIE-EW-M20/PG9-SW24-VA | 1 | **1950270000** |
| Positioning plug connector PG 13.5 150 mm | | | |
| Positioning plug connector PG 13.5 300 mm | | | |
| Positioning plug connector M 20 150 mm | | | |
| Positioning plug connector M 20 300 mm | | | |
| Positioning plug connector M 20 300 mm B-coded | | | |
| **Note** | | | |

| Type | Qty. | Order No. |
|---|---|---|
| | | |
| | | |
| POS-4P M12 PG13.5 150mm | 1 | **9455650000** |
| POS-4P M12 PG13.5 300 mm | 1 | **8425910000** |
| POS-4P M12 M20 150mm | 1 | **8425930000** |
| POS-4P M12 M20 300mm | 1 | **8425940000** |
| POS-5P M12/M20 300MM | 1 | **1795500000** |

## Dimensioned drawing

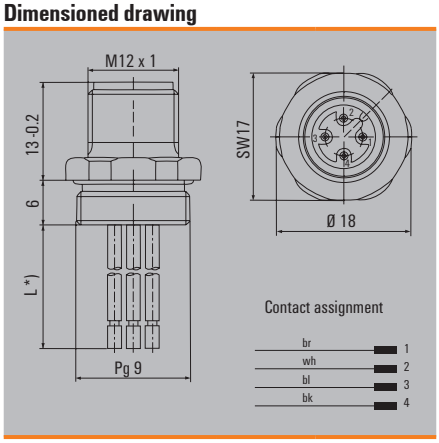


## Dimensioned drawing

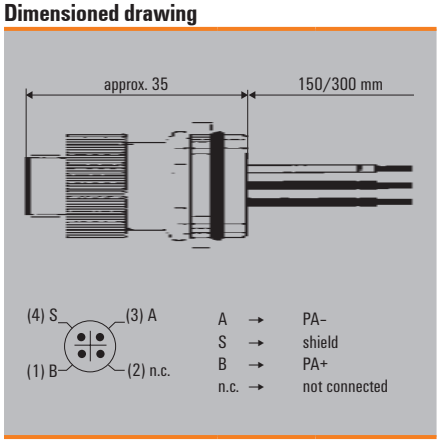


## Fitting information

| | Torque settings |
|---|---|
| Set screw | 1.8 - 2.0 Nm |
| Knurled ring | hand-tight |
| Lock-nut | 6.25 Nm |

If the device is exposed to vibration, we recommend using a stub cable to isolate the device from the vibration.

# FBCon distributors for the industrial market

**PROFIBUS-PA T-connector**
- **for industrial applications**
- **standard**

The **PROFIBUS-PA** installation products are increasingly used in the:
- food and beverage industry
- process industries and
- chemical industry

The product range offers a wide choice of customer solutions for use in harsh conditions. This includes standard and EX versions of single and multi-way design with M12 plug-in connection or cable glands. Weidmüller offers a solution for almost every application. If you cannot find your solution here, please contact the branch / sales office responsible for you.

**PROFIBUS-PA T-connector**
**standard**
- 1, 2, 4, 8-way with EMC cable gland
  Industrial + EX / ATEX
- Optional surge protectio

The **PROFIBUS-PA T-connector** is intended for direct coupling of measuring devices, sensors, actuators, etc.
- IP 66 Ingress protection class
- Modular design
- Uninterruptible bus operation for service situations
- Simple handling
- Low installation costs
- External earth stud
- Pressure equalising element
- EMC cable gland

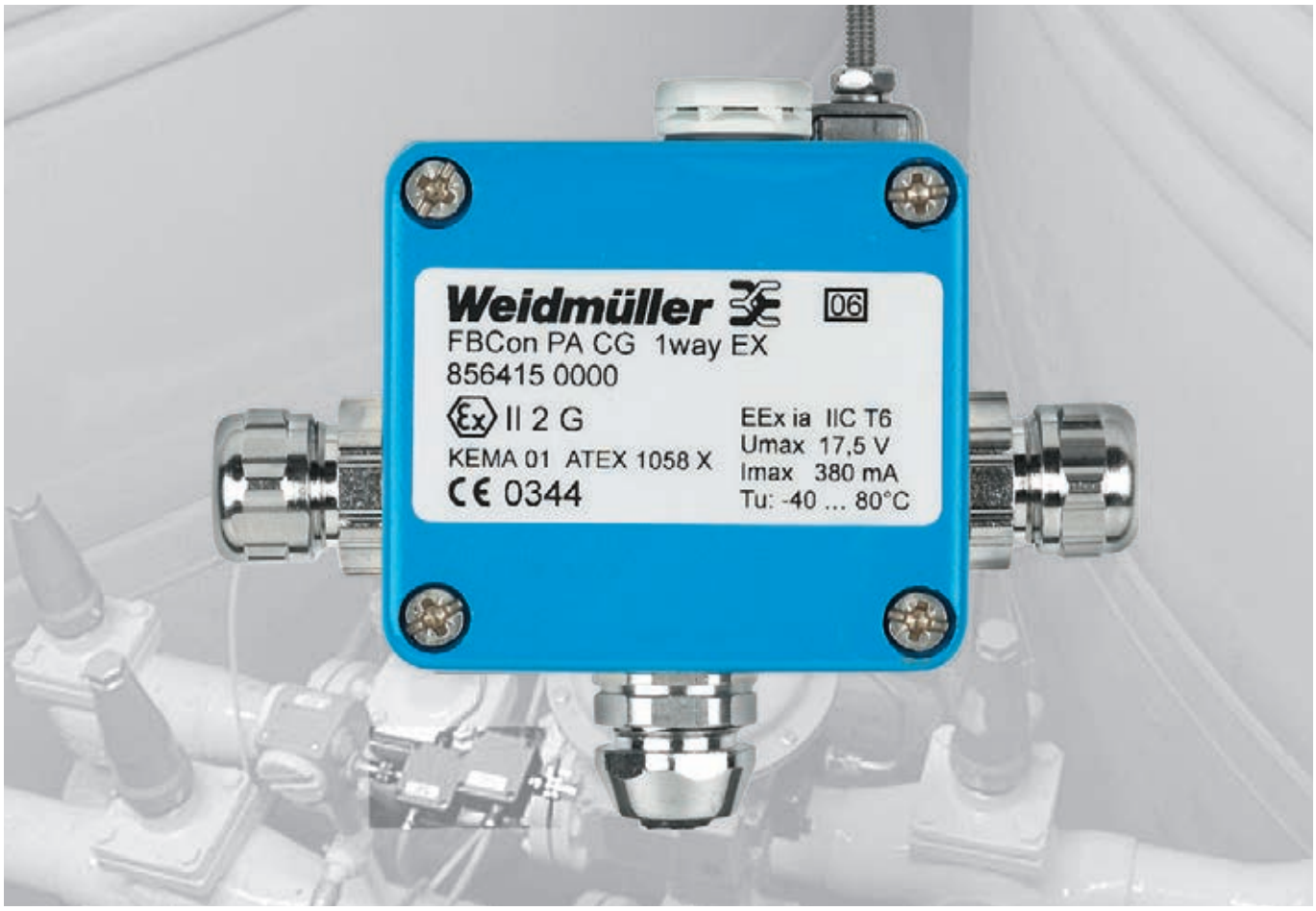

# FBCon Fieldbus distributor

### PROFIBUS-PA Fieldbus distributor: robust and well-tested

FBCon fieldbus distributors are available in industrial and Ex(ia) versions. They are used for coupling 1-8 field devices or sensors. The connection is made via a spur. The spur is connected by an M12 plug-in connector or directly via an EMC cable gland.
The communication and device powering is handled by a common 2-core wire.
The PROFIBUS-PA distributors normally feature a switchable terminating resistor. For the Ex zone, the terminating resistor is made with a separate box. Current limiting variants help to ensure that the facility can operate smoothly.

Weidmüller offers a comprehensive line of accessories including pre-assembled PROFIBUS-PA cables in the standard lengths, and plug in connectors for a wide variety of applications.

- Fieldbus distributor for PROFIBUS-PA and PROFIBUS-DP
- Standard distributor for use in the safe zone
- Aluminium housing for connecting from 1 to 8 field devices
- Stainless steel distributor for applications in the food processing industry, for connecting from 1 to 8 field devices
- Intrinsically safe (ia) Ex version in aluminium housing for connecting from 1 to 8 field devices
- EMC cable gland for a secure contact with the shielding

### Technical data for PROFIBUS-PA standard distributors

| | |
|---|---|
| **Temperature range** | |
| Operating temperature | from –40 °C to 85 °C |
| Ingress protection class | IP 66 |
| Housing material | High-quality aluminium alloy (AL-Si 12) |
| Surface | Stove-enamelled RAL 7001 |
| PROFIBUS-PA connection | Tension clamp connection 0.5 - 1.5 $mm^2$ |
| Cable entry | Cable gland M16 |
| Clamping range | 5.5 - 9.5 mm |
| Measuring device connector M12 x 14-pin | Contacts MS, surface CUZnAu |
| **Note** | |

### Handling information

| | |
|---|---|
| **Torques** | |
| M16 gland to housing | 6.25 Nm |
| M16 union nut on cable gland | 4.5 Nm |
| Housing cover | 1.8 - 2.0 Nm |
| External earth stud | 1.8 - 2.0 Nm |

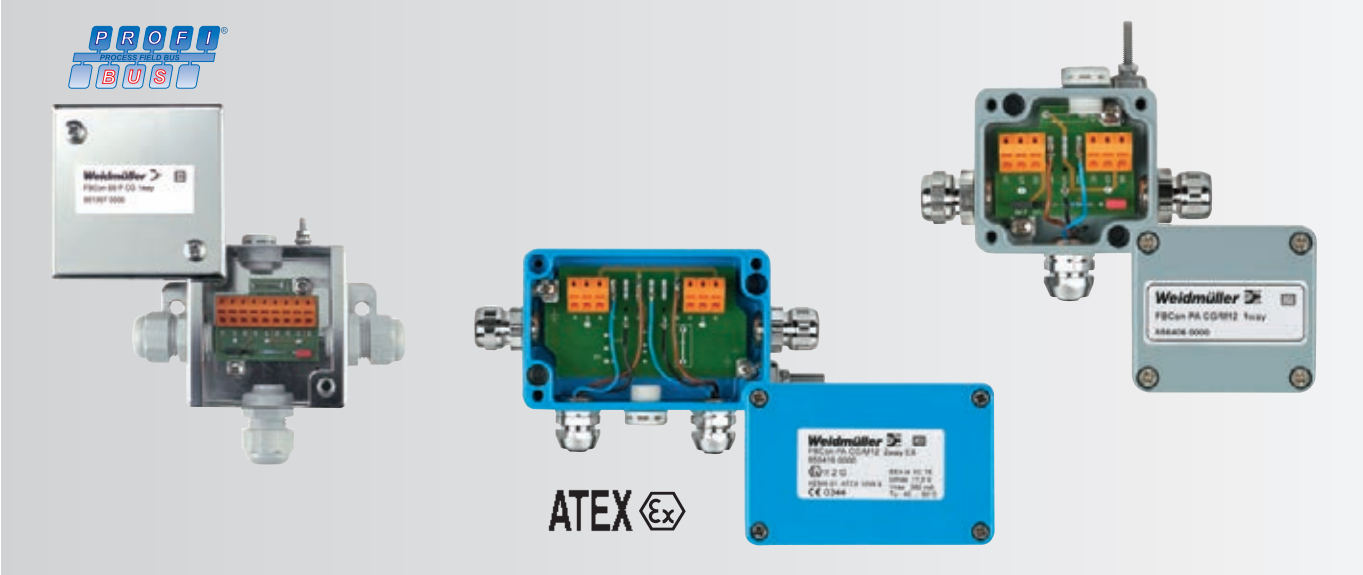

# PROFIBUS-PA - FBCon T-distributor

## 1-channel distributor

**Cable gland**

### Ordering data

| Type | Cable gland | QTY | Order No. |
|---|---|---|---|
| **Aluminium housing** | | | |
| FBCon PA CG 1way | branch line CG | 1 | **8564090000** |
| **Stainless steel enclosure** | | | |
| FBCon SS CG 1way | branch line CG | 1 | **8703430000** |
| FBCon SS PCG 1way | all connections PCG | 1 | **8613670000** |

CG = brass cable gland
PCG = plastic cable gland

### Dimensioned drawing

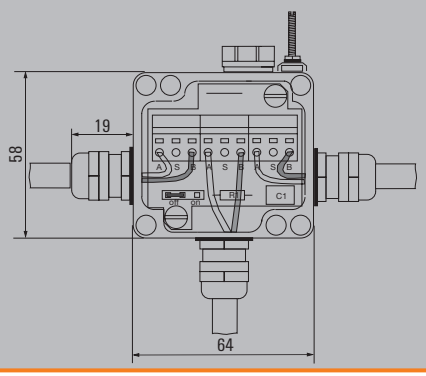


### Wiring diagram

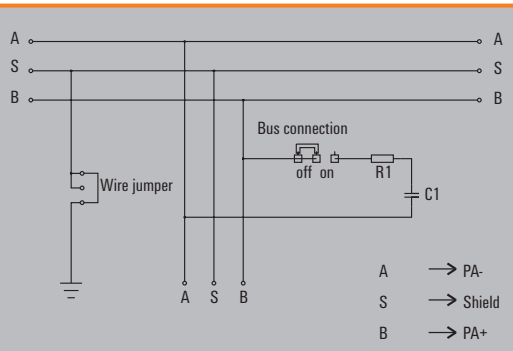


## 1-channel distributor

**M12 connection**

### Ordering data

| Type | Cable gland | QTY | Order No. |
|---|---|---|---|
| **Aluminium housing** | | | |
| FBCon PA CG/M12 1way | branch line M12 | 1 | **8564060000** |
| **Stainless steel enclosure** | | | |
| FBCon SS CG/M12 1way | branch line M12 | 1 | **8726020000** |

CG = brass cable gland
PCG = plastic cable gland

### Dimensioned drawing

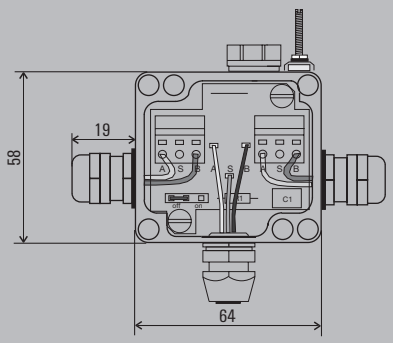


### Wiring diagram

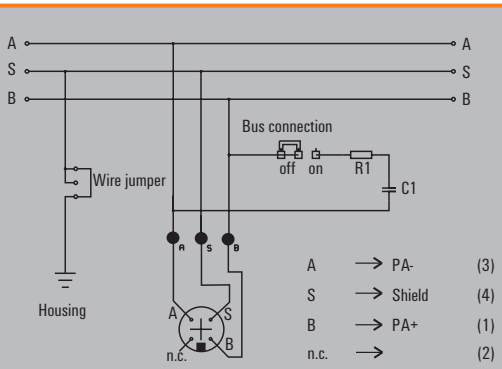

## 2-channel distributor

**Cable gland**

### Ordering data

| Type | Cable gland | QTY | Order No. |
|---|---|---|---|
| **Aluminium housing** | | | |
| FBCon PA CG 2way | branch line CG | 1 | **8564100000** |
| **Stainless steel enclosure** | | | |

CG = brass cable gland
PCG = plastic cable gland

### Dimensioned drawing

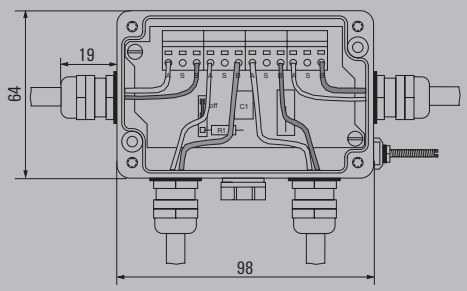


### Wiring diagram

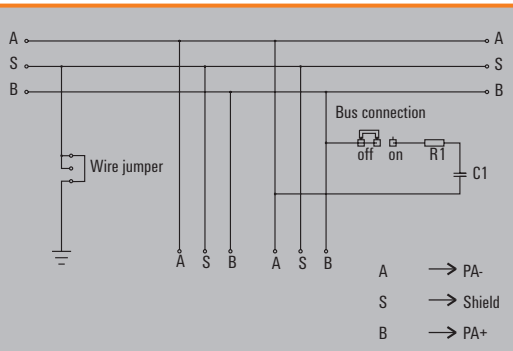


## 2-channel distributor

**M12 connection**

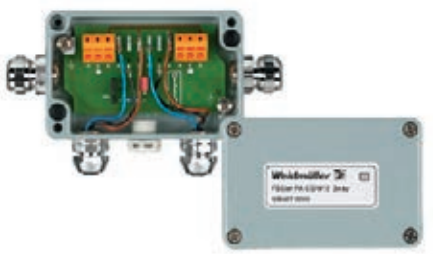

### Ordering data

| Type | Cable gland | QTY | Order No. |
|---|---|---|---|
| **Aluminium housing** | | | |
| FBCon PA CG/M12 2way | branch line M12 | 1 | **8564070000** |
| **Stainless steel enclosure** | | | |

CG = brass cable gland
PCG = plastic cable gland

### Dimensioned drawing

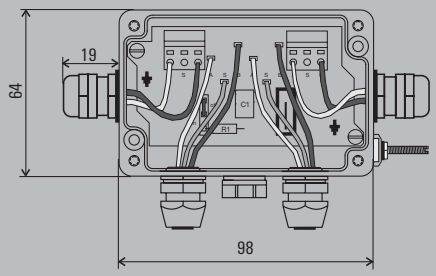


### Wiring diagram

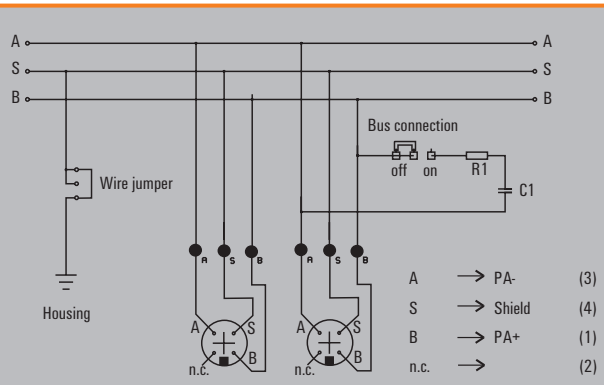

# PROFIBUS-PA - FBCon T-distributor

## 4-channel distributor

**Cable gland**

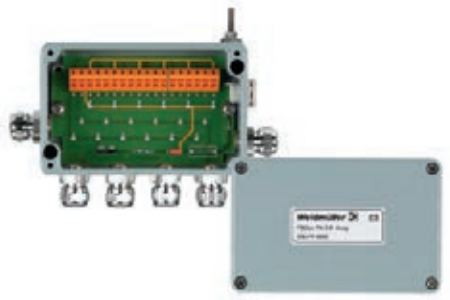

### Ordering data

| Type | Cable gland | QTY | Order No. |
|---|---|---|---|
| **Aluminium housing** | | | |
| FBCon PA CG 4way | branch line CG | 1 | **8564110000** |
| **Stainless steel enclosure** | | | |
| FBCon SS CG 4way | branch line CG | 1 | **8703450000** |
| FBCon SS PCG 4way | all connections PCG | 1 | **8613680000** |

CG = brass cable gland
PCG = plastic cable gland

### Dimensioned drawing

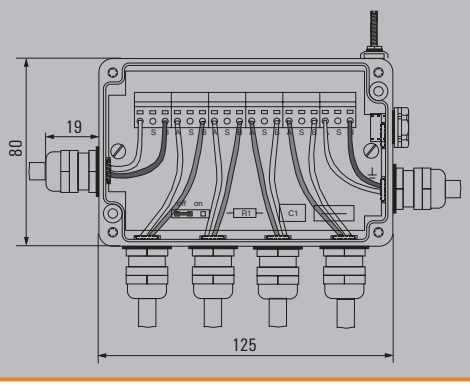


### Wiring diagram

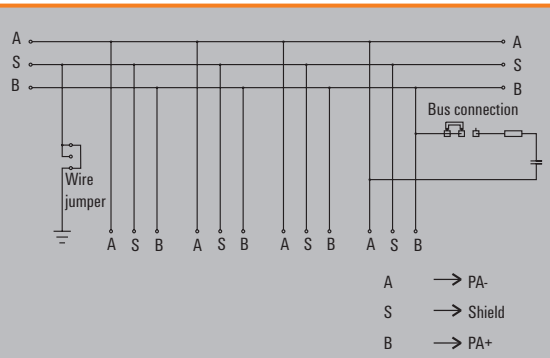


## 4-channel distributor

**M12 connection**

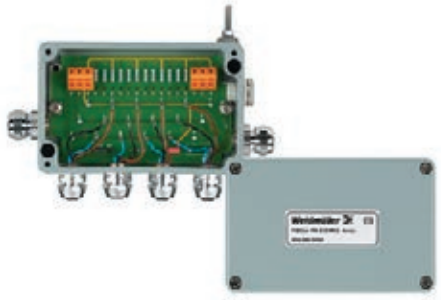

### Ordering data

| Type | Cable gland | QTY | Order No. |
|---|---|---|---|
| **Aluminium housing** | | | |
| FBCon PA CG/M12 4way | branch line M12 | 1 | **8564080000** |
| **Stainless steel enclosure** | | | |
| FBCon SS CG/M12 4way | branch line M12 | 1 | **8726040000** |

CG = brass cable gland
PCG = plastic cable gland

### Dimensioned drawing

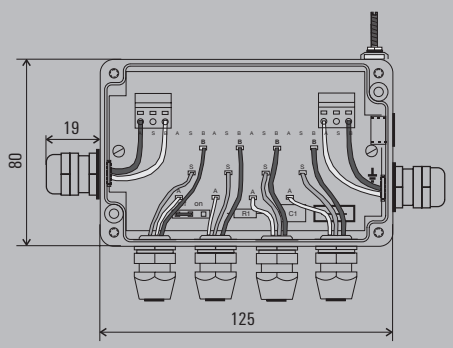


### Wiring diagram

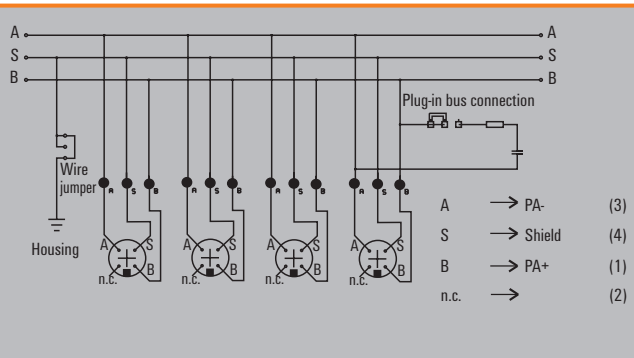

## 8-channel distributor

**Cable gland**

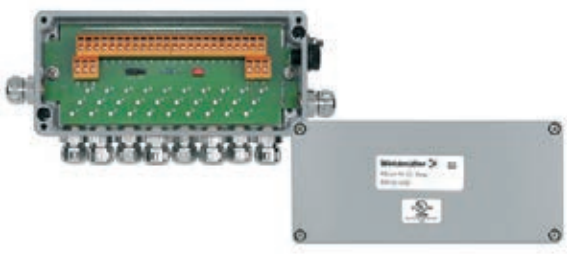

### Ordering data

| Type | Cable gland | QTY | Order No. |
|---|---|---|---|
| **Aluminium housing** | | | |
| FBCon PA CG 8way | branch line CG | 1 | **8564300000** |
| **Stainless steel enclosure** | | | |
| FBCon SS CG 8way | branch line CG | 1 | **8703470000** |
| FBCon SS PCG 8way | all connections PCG | 1 | **8640720000** |

CG = brass cable gland
PCG = plastic cable gland

### Dimensioned drawing

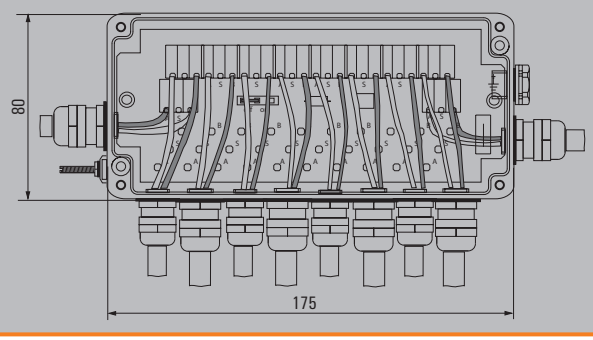


### Wiring diagram

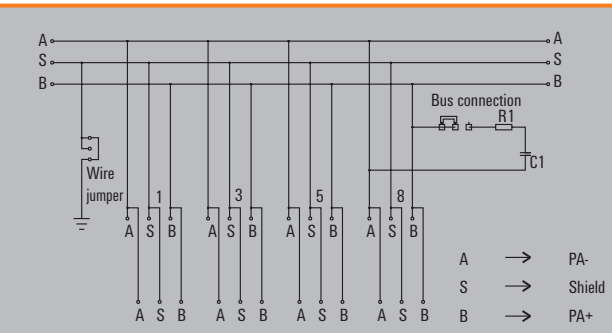


## 8-channel distributor

**M12 connection**

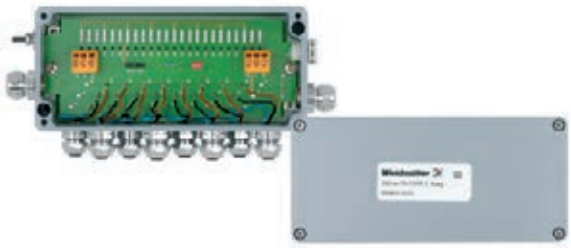

### Ordering data

| Type | Cable gland | QTY | Order No. |
|---|---|---|---|
| **Aluminium housing** | | | |
| FBCon PA CG/M12 8way | branch line M12 | 1 | **8564310000** |
| **Stainless steel enclosure** | | | |
| FBCon SS CG/M12 8way | branch line M12 | 1 | **8726050000** |

CG = brass cable gland
PCG = plastic cable gland

### Dimensioned drawing

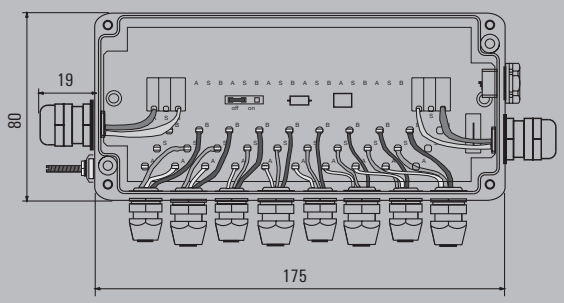


### Wiring diagram

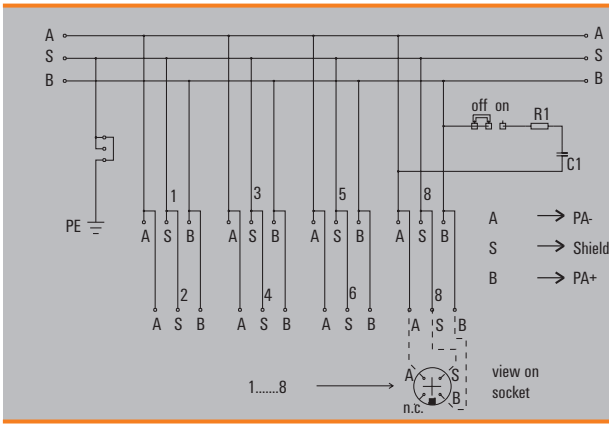

## PROFIBUS-PA - FBCon T-distributor with surge protection

### Fieldbus components for industrial applications with surge protection or current limiter

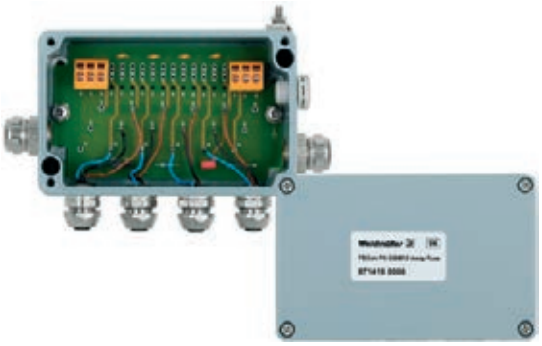

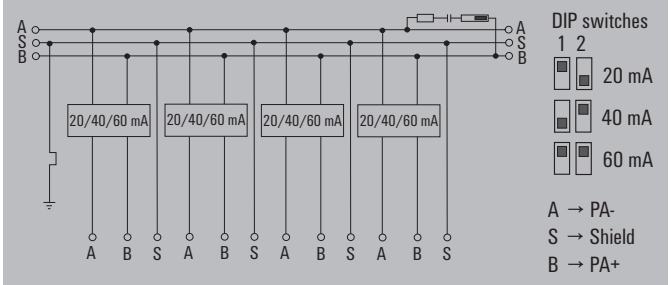


**Example: 4-way module with current limiter**

### PROFIBUS-PA T-connectors

Fine surge protection or integrated current limiting mechanisms are designed for protecting connected measuring devices, sensors or actuators from surge voltages. Gas-discharge tubes and suppressor diodes are voltage-limiting protection mechanisms.
If a rapidly rising voltage pulse reaches the input of a T-connector with surge protection, the gas discharge tube ignites and discharges a high current.
The residual pulse is limited by a suppressor diode.

In the case of a slow rise in voltage, the pulse is processed by the diode alone.
The housing is connected to the protective earth via an external earth stud.
When using the connectors for current limiting, the PROFIBUS-PA network is protected against short circuits with protective circuitry.
The current can be set to either 20 mA, 40 mA or 60 mA by means of two DIP switches.

### Surge protection
### Technical data

| | |
|---|---|
| Operating temperature | -40 °C to 85 °C |
| Ingress protection class | IP 67 |
| Enclosure material | High grade aluminium alloy (AL - SI 12) |
| Finish | Painted RAL 7001 |
| PROFIBUS-PA connection | Tension clamp terminals 0.5 - 1.5 mm² |
| Cable entry | Cable gland M16 |
| Branch | M12 socket (4-pin) |
| Cable gland clamping range | 5.5 - 9.5 mm |
| Nominal voltage DC/AC | UN = 24 V DC/18 V AC |
| Max. permissible operating voltage | UC = 30 V DC/21 V AC |
| Rated current at 30 °C | IN = 500 mA |
| Trip surge voltage (1 kV/µs) | < 600 V |
| Rated discharge surge current (8/20 µs) | ISN = 10 KA (wire-wire, wire-PE) |
| Output voltage limit (8/20 µs) | UP = 65 V |
| PROFIBUS-PA bus terminator | Via jumper |

### Installation advice

| Torques | |
|---|---|
| Screw terminals | 0.4 Nm |
| M16 cable gland at enclosure | 6.0 Nm |
| Union nut M16 cable gland | 4.0 Nm |
| Enclosure cover | 1.8 - 2.0 Nm |
| External earthing cable | 1.8 - 2.0 Nm |

### Limiter
### Technical data

| | |
|---|---|
| Operating temperature | -40 °C to 85 °C |
| Ingress protection class | IP 67 |
| Enclosure material | High grade aluminium alloy (AL - SI 12) |
| Finish | Painted RAL 7001 |
| PROFIBUS-PA connection | Tension clamp terminals 0.5 - 1.5 mm² |
| Cable entry | Cable gland M16 |
| Branch | M12 socket (4-pin) |
| Cable gland clamping range | 5.5 - 9.5 mm |
| | |
| Short-circuit protection per station | 20, 40, 60 mA settings |
| | |
| | |
| | |
| | |
| PROFIBUS-PA bus terminator | Via jumper |

### Installation advice

| Torques | |
|---|---|
| Screw terminals | 0.4 Nm |
| M16 cable gland at enclosure | 6.0 Nm |
| Union nut M16 cable gland | 4.0 Nm |
| Enclosure cover | 1.8 - 2.0 Nm |
| External earthing cable | 1.8 - 2.0 Nm |

## 1-channel distributor (OVP)

**Cable gland**

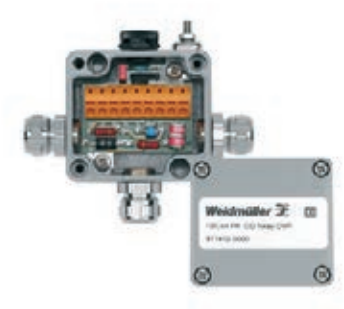

### Ordering data

| Type | Cable gland | QTY | Order No. |
|---|---|---|---|
| **Aluminium housing** | | | |
| FBCon PA CG 1way OVP | branch line CG | 1 | **8714120000** |
| **Stainless steel enclosure** | | | |
| FBCon SS PCG 1way OVP | all connections PCG | 1 | **8715270000** |

CG = brass cable gland
PCG = plastic cable gland

### Dimensioned drawing

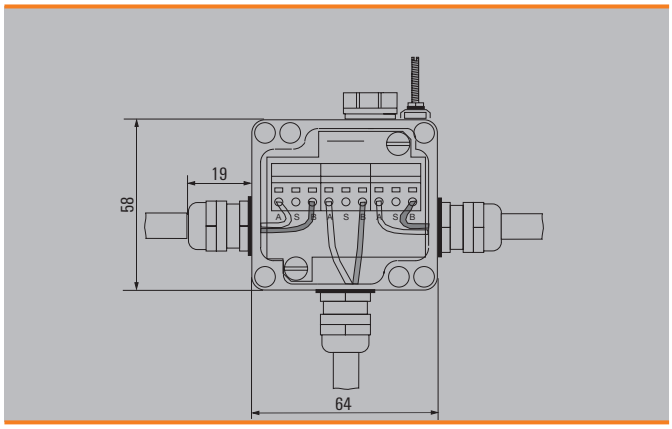


### Wiring diagram

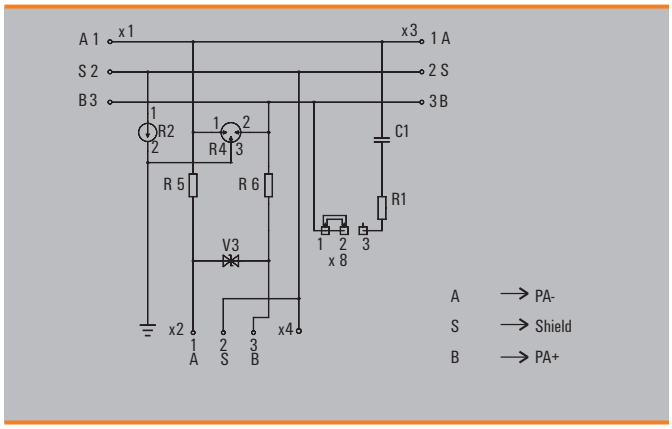


## 1-channel distributor (OVP)

**M12 connection**

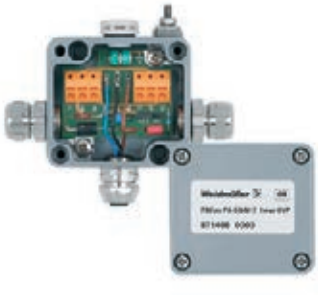

### Ordering data

| Type | Cable gland | QTY | Order No. |
|---|---|---|---|
| **Aluminium housing** | | | |
| FBCon PA CG/M12 1way OVP | branch line M12 | 1 | **8714080000** |
| **Stainless steel enclosure** | | | |

CG = brass cable gland
PCG = plastic cable gland

### Dimensioned drawing

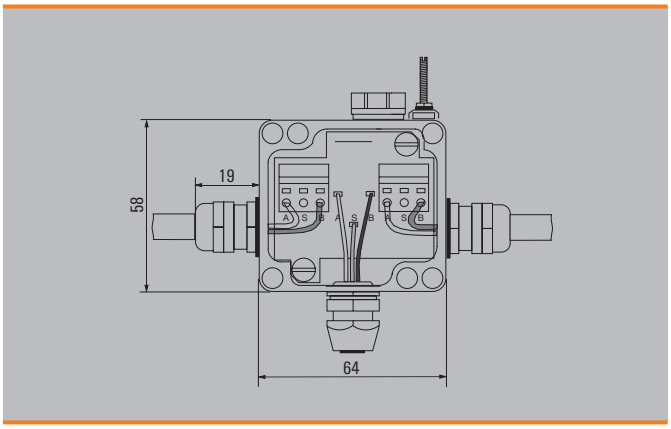


### Wiring diagram

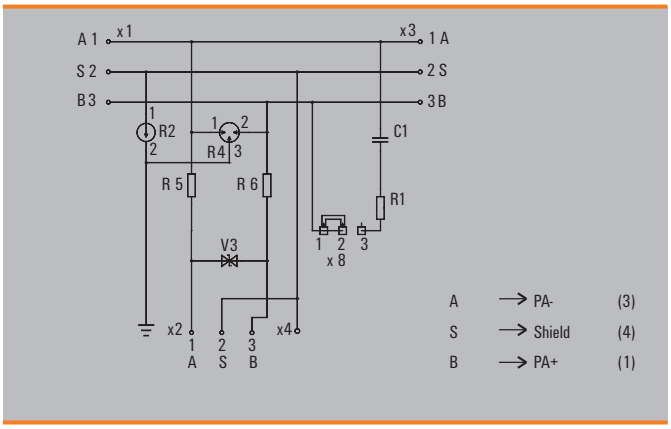

# PROFIBUS-PA - FBCon T-distributor with surge protection

## 2-channel distributor (OVP)

**Cable gland**

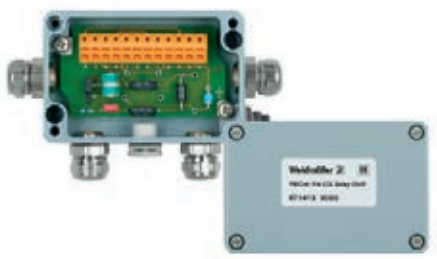

### Ordering data

| Type | Cable gland | QTY | Order No. |
|---|---|---|---|
| **Aluminium housing** | | | |
| FBCon PA CG 2way OVP | branch line CG | 1 | **8714130000** |
| **Stainless steel enclosure** | | | |

CG = brass cable gland
PCG = plastic cable gland

### Dimensioned drawing

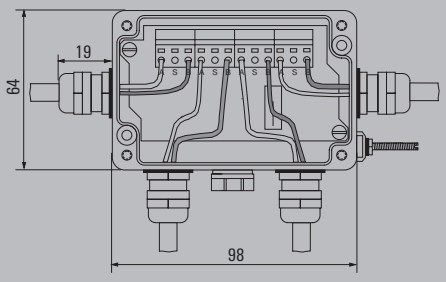


### Wiring diagram

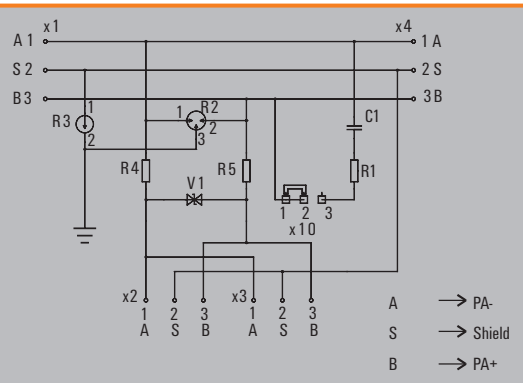


## 2-channel distributor (OVP)

**M12 connection**

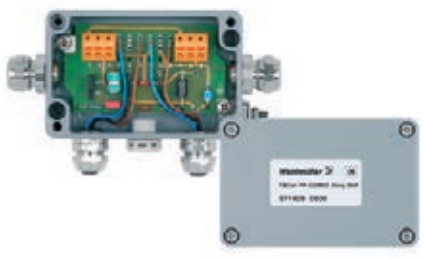

### Ordering data

| Type | Cable gland | QTY | Order No. |
|---|---|---|---|
| **Aluminium housing** | | | |
| FBCon PA CG/M12 2way OVP | branch line M12 | 1 | **8714090000** |
| **Stainless steel enclosure** | | | |

CG = brass cable gland
PCG = plastic cable gland

### Dimensioned drawing

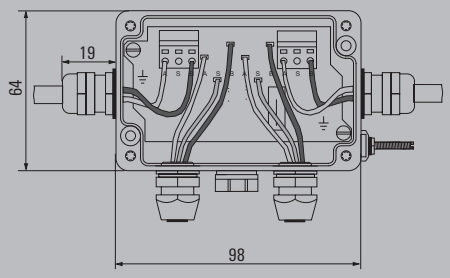


### Wiring diagram

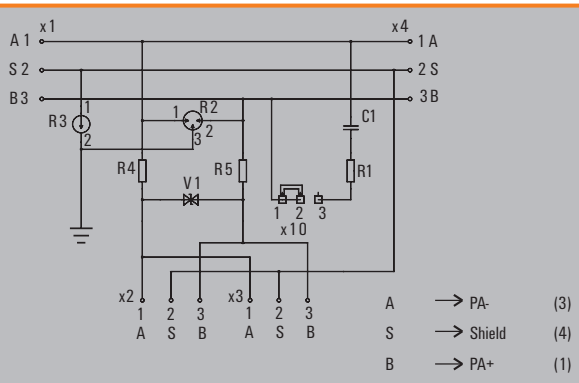

## 4-channel distributor (OVP)

**Cable gland**

### Ordering data

| Type | Cable gland | QTY | Order No. |
|---|---|---|---|
| **Aluminium housing** | | | |
| FBCon PA CG 4way OVP | branch line CG | 1 | **8714140000** |
| **Stainless steel enclosure** | | | |
| FBCon SS PCG 4way OVP | all connections PCG | 1 | **8726080000** |

CG = brass cable gland
PCG = plastic cable gland

### Dimensioned drawing

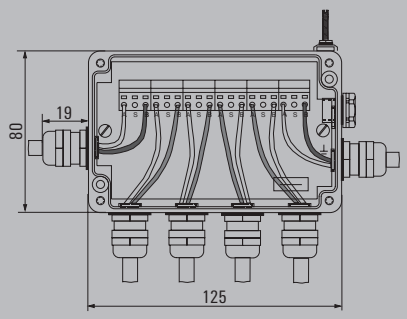


### Wiring diagram

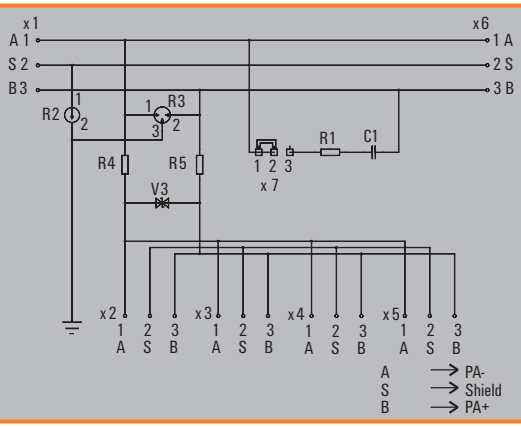


## 4-channel distributor (OVP)

**M12 connection**

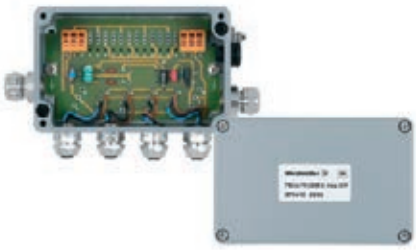

### Ordering data

| Type | Cable gland | QTY | Order No. |
|---|---|---|---|
| **Aluminium housing** | | | |
| FBCon PA CG/M12 4way OVP | branch line M12 | 1 | **8714100000** |
| **Stainless steel enclosure** | | | |

CG = brass cable gland
PCG = plastic cable gland

### Dimensioned drawing

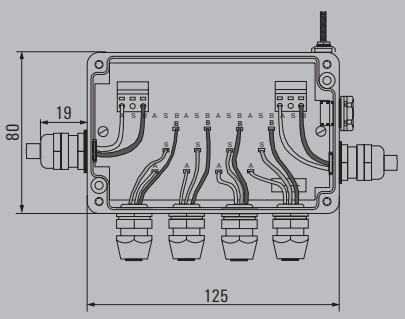


### Wiring diagram

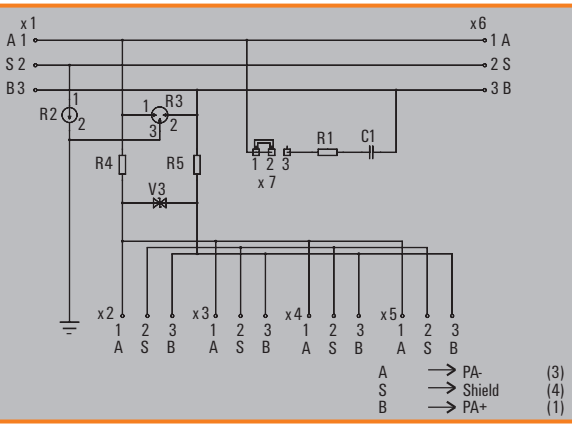

# PROFIBUS-PA - FBCon T-distributor with surge protection

## 8-channel distributor (OVP)

**Cable gland**

### Ordering data

| Type | Cable gland | QTY | Order No. |
|---|---|---|---|
| **Aluminium housing** | | | |
| FBCon PA CG 8way OVP | branch line CG | 1 | **8714150000** |
| **Stainless steel enclosure** | | | |
| FBCon SS PCG 8way OVP | all connections PCG | 1 | **8726090000** |

CG = brass cable gland
PCG = plastic cable gland

### Dimensioned drawing

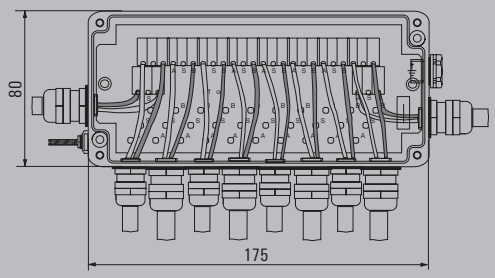


### Wiring diagram

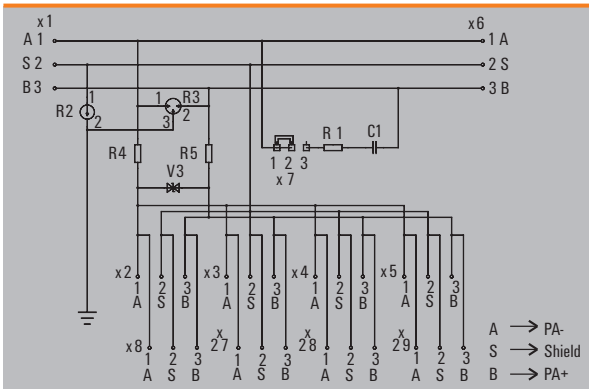


## 8-channel distributor (OVP)

**M12 connection**

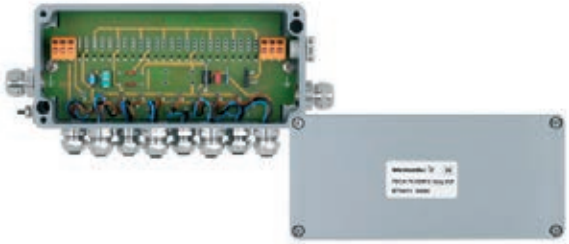

### Ordering data

| Type | Cable gland | QTY | Order No. |
|---|---|---|---|
| **Aluminium housing** | | | |
| FBCon PA CG/M12 8way OVP | branch line M12 | 1 | **8714110000** |
| **Stainless steel enclosure** | | | |

CG = brass cable gland
PCG = plastic cable gland

### Dimensioned drawing

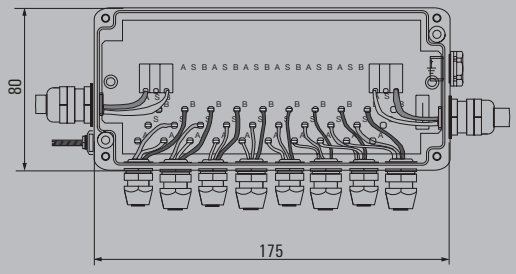


### Wiring diagram

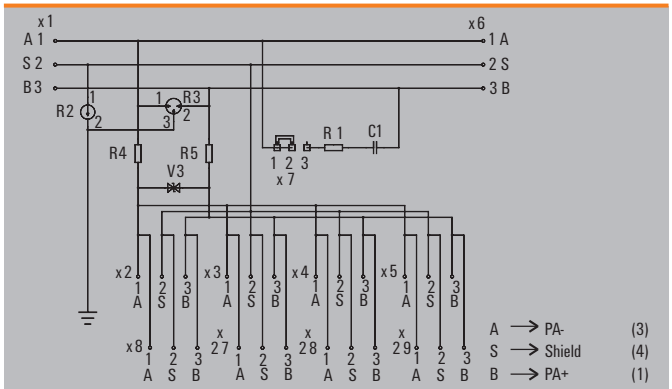

## 1-channel distributor (limiter)

**Cable gland**

### Ordering data

| Type | Cable gland | QTY | Order No. |
|---|---|---|---|
| **Aluminium housing** | | | |
| FBCon PA CG 1way Limiter | branch line CG | 1 | **8714200000** |
| **Stainless steel enclosure** | | | |
| FBCon SS PCG 1way Limiter | all connections PCG | 1 | **8726110000** |

CG = brass cable gland
PCG = plastic cable gland

### Dimensioned drawing

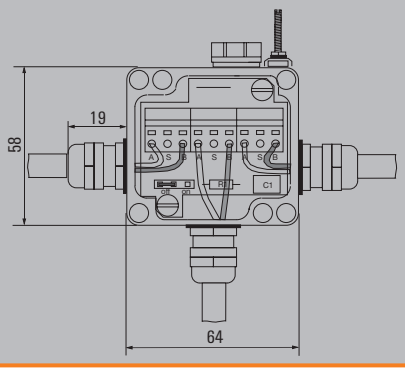


### Wiring diagram

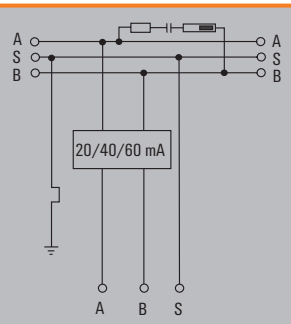


DIP switches

1 2

20 mA

40 mA

60 mA

A → PA-

S → Shield

B → PA+

## 1-channel distributor (limiter)

**M12 connection**

### Ordering data

| Type | Cable gland | QTY | Order No. |
|---|---|---|---|
| **Aluminium housing** | | | |
| FBCon PA CG/M12 1way Limiter | branch line M12 | 1 | **8714160000** |
| **Stainless steel enclosure** | | | |

CG = brass cable gland
PCG = plastic cable gland

### Dimensioned drawing

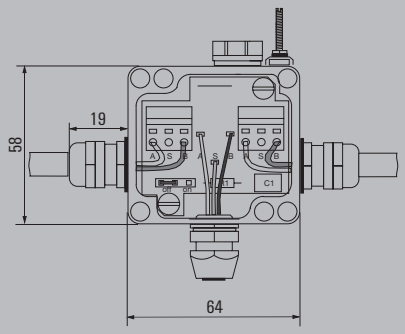


### Wiring diagram

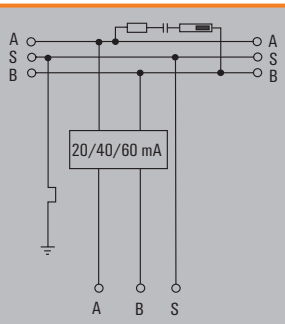


DIP switches

1 2

20 mA

40 mA

60 mA

A → PA- (3)

S → Shield (4)

B → PA+ (1)

# PROFIBUS-PA - FBCon T-distributor with surge protection

## 2-channel distributor (limiter)

**Cable gland**

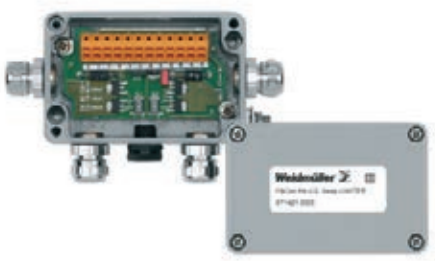

### Ordering data

| Type | Cable gland | QTY | Order No. |
|---|---|---|---|
| **Aluminium housing** | | | |
| FBCon PA CG 2way Limiter | branch line CG | 1 | **8714210000** |
| **Stainless steel enclosure** | | | |

CG = brass cable gland
PCG = plastic cable gland

### Dimensioned drawing

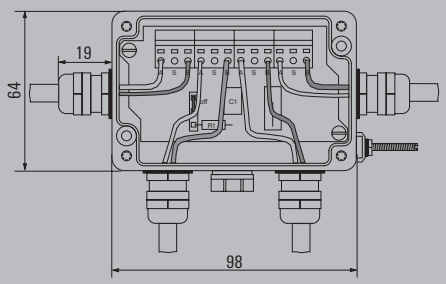


### Wiring diagram

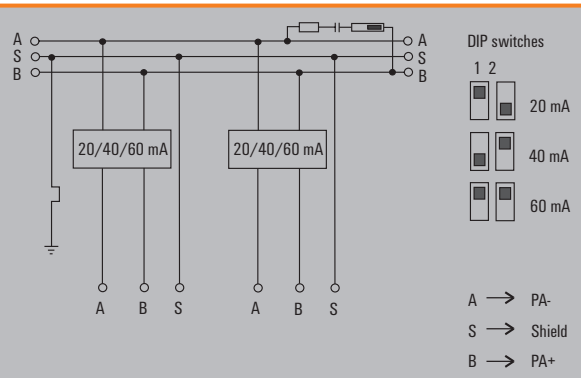


## 2-channel distributor (limiter)

**M12 connection**

### Ordering data

| Type | Cable gland | QTY | Order No. |
|---|---|---|---|
| **Aluminium housing** | | | |
| FBCon PA CG/M12 2way Limiter | branch line M12 | 1 | **8714170000** |
| **Stainless steel enclosure** | | | |

CG = brass cable gland
PCG = plastic cable gland

### Dimensioned drawing

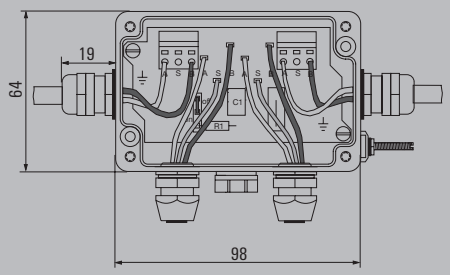


### Wiring diagram

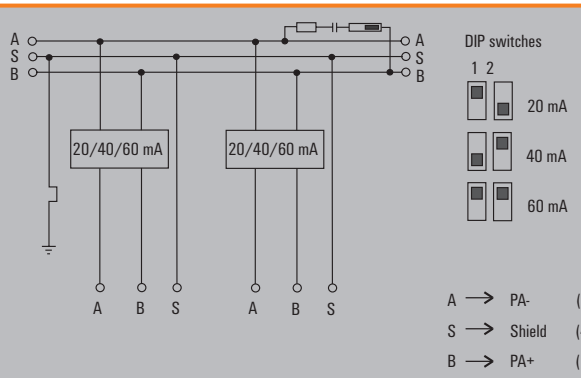

## 4-channel distributor (limiter)

**Cable gland**

### Ordering data

| Type | Cable gland | QTY | Order No. |
|---|---|---|---|
| **Aluminium housing** | | | |
| FBCon PA CG 4way Limiter | branch line CG | 1 | **8714220000** |
| **Stainless steel enclosure** | | | |
| FBCon SS PCG 4way Limiter | all connections PCG | 1 | **8715260000** |

CG = brass cable gland
PCG = plastic cable gland

### Dimensioned drawing

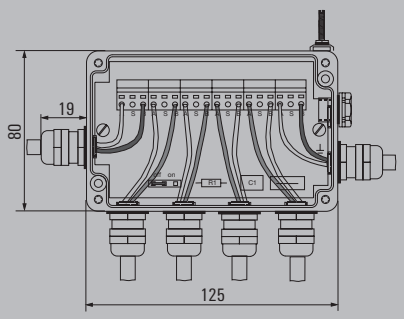


### Wiring diagram

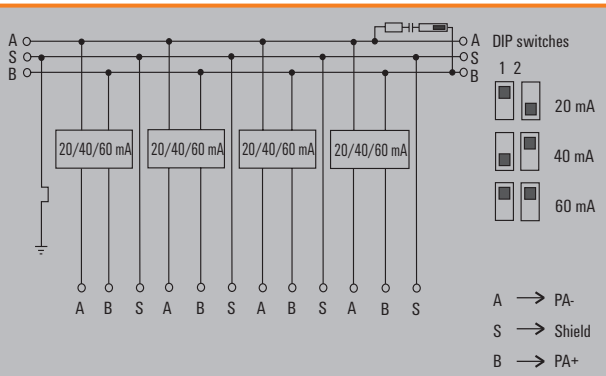


## 4-channel distributor (limiter)

**M12 connection**

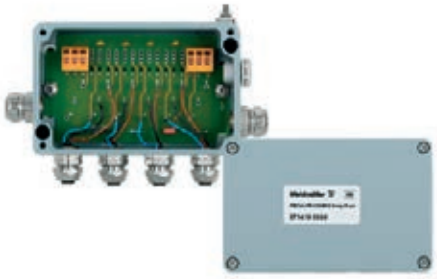

### Ordering data

| Type | Cable gland | QTY | Order No. |
|---|---|---|---|
| **Aluminium housing** | | | |
| FBCon PA CG/M12 4way Limiter | branch line M12 | 1 | **8714180000** |
| **Stainless steel enclosure** | | | |

CG = brass cable gland
PCG = plastic cable gland

### Dimensioned drawing

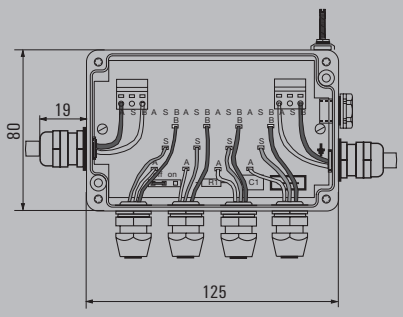


### Wiring diagram

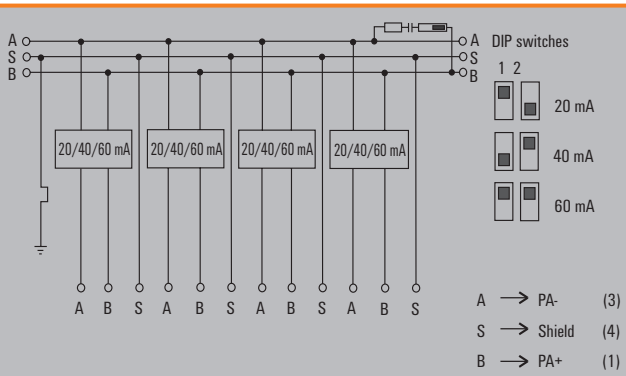

# PROFIBUS-PA - FBCon T-distributor with surge protection

## 8-channel distributor (limiter)

**Cable gland**

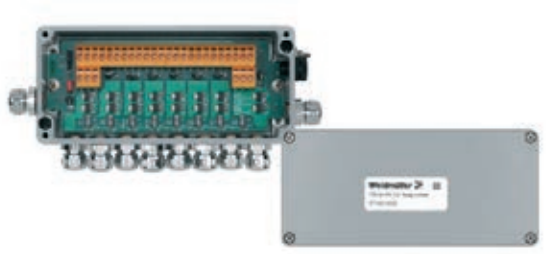

### Ordering data

| Type | Cable gland | QTY | Order No. |
|---|---|---|---|
| **Aluminium housing** | | | |
| FBCon PA CG 8way Limiter | branch line CG | 1 | **8714230000** |
| **Stainless steel enclosure** | | | |
| FBCon SS PCG 8way Limiter | all connections PCG | 1 | **8726160000** |

CG = brass cable gland
PCG = plastic cable gland

### Dimensioned drawing

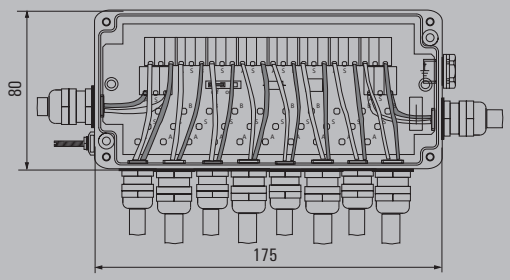


### Wiring diagram

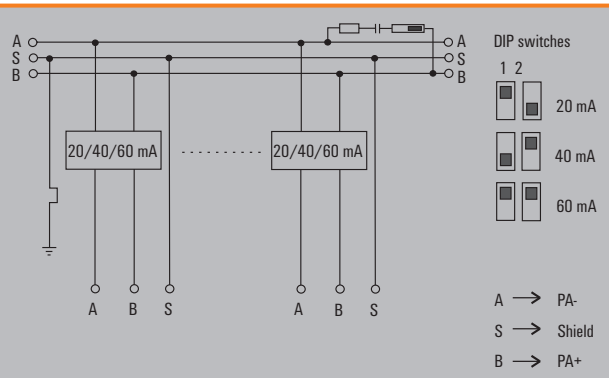


## 8-channel distributor (limiter)

**M12 connection**

### Ordering data

| Type | Cable gland | QTY | Order No. |
|---|---|---|---|
| **Aluminium housing** | | | |
| FBCon PA CG/M12 8way Limiter | branch line M12 | 1 | **8714190000** |
| **Stainless steel enclosure** | | | |

CG = brass cable gland
PCG = plastic cable gland

### Dimensioned drawing

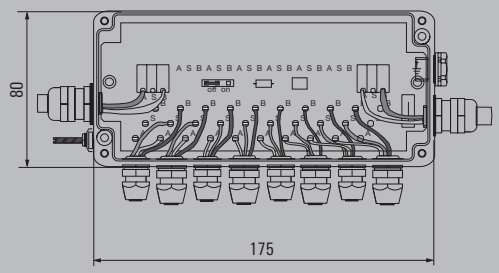


### Wiring diagram

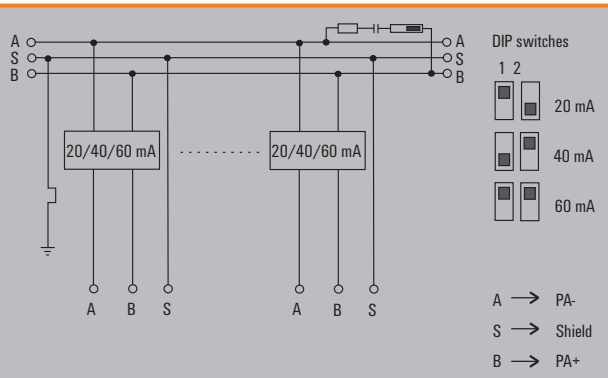

# FBCon distributors for Ex areas

**PROFIBUS-PA T-connector**
- **Ex(ia)**

The PROFIBUS-PA installation products are increasingly used in the
- food industry
- basic industries and
- chemical industry.

The product range offers a wide choice of customer solutions for use in harsh conditions. This includes standard and EX versions of single and multi-way design with M12 plug in connection or cable glands. Weidmüller offers a solution for almost every application. If you cannot find your solution here, please contact the branch / sales office responsible for you.

PROFIBUS-PA T-connector
- Ex(ia)
- 1-way
- 2-way
- 4-way
- 8-way

The PROFIBUS-PA T connector Ex(ia) specification is intended for direct coupling of measuring devices, sensors, actuators, etc. in potentially explosive areas.
- Approval for intrinsically safe use ATEX approval
- IP 66 Ingress Protection Class
- Modular design
- Uninterruptible bus operation
- Simple handling
- External earth terminal
- External bus terminator

# Approvals

Weidmüller

Bus Terminator 8556460000

Datum:27.11.00, Seite 1/2

Technische Beschreibung /Einsatzgebiete:

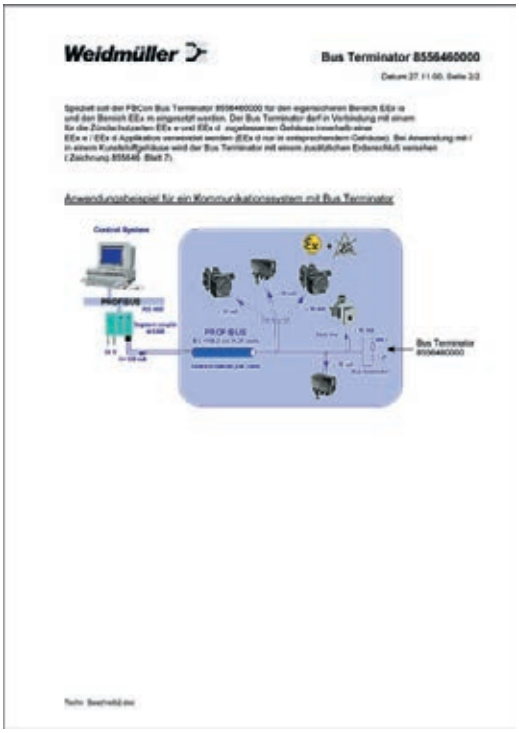

Weidmüller

Bus Terminator 8556460000

Datum:27.11.00, Seite 2/2

Anwendungsbeispiel für ein Kommunikationssystem mit Bus Terminator

KEMA

EC-TYPE EXAMINATION CERTIFICATE

KEMA

AMENDMENT 1

Manufacturer: Weidmüller Interface GmbH & Co.

Description

Test documentation

Page 1/1

# PROFIBUS-PA - FBCon T-distributor ATEX Ex(ia)

## 1-channel distributor Ex

**Cable gland**

### Ordering data

| Type | Cable gland | QTY | Order No. |
|---|---|---|---|
| **Aluminium housing** | | | |
| FBCon PA CG 1way Ex | branch line CG | 1 | **8564180000** |
| **Stainless steel enclosure** | | | |

CG = brass cable gland
PCG = plastic cable gland

### Dimensioned drawing

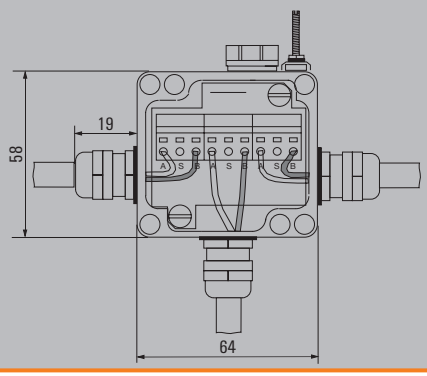


### Wiring diagram

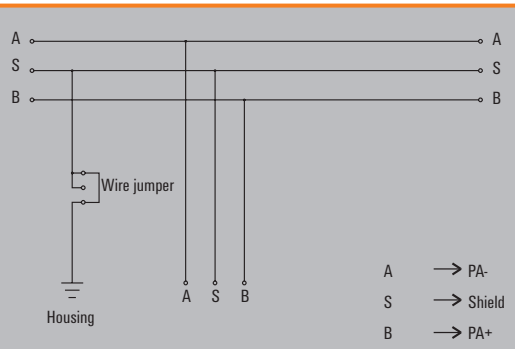


## 1-channel distributor Ex

**M12 connection**

### Ordering data

| Type | Cable gland | QTY | Order No. |
|---|---|---|---|
| **Aluminium housing** | | | |
| FBCon PA CG/M12 1way Ex | branch line M12 | 1 | **8564150000** |
| **Stainless steel enclosure** | | | |

CG = brass cable gland
PCG = plastic cable gland

### Dimensioned drawing

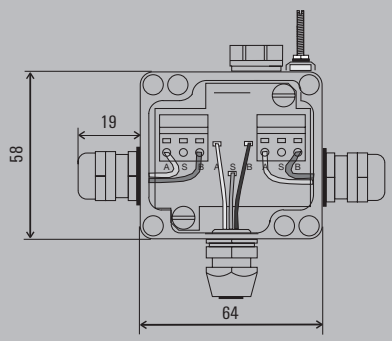


### Wiring diagram

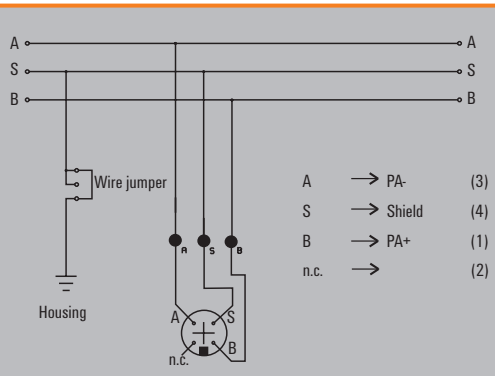

## 2-channel distributor Ex

**Cable gland**

### Ordering data

| Type | Cable gland | QTY | Order No. |
|---|---|---|---|
| **Aluminium housing** | | | |
| FBCon PA CG 2way Ex | branch line CG | 1 | **8564190000** |
| **Stainless steel enclosure** | | | |

CG = brass cable gland
PCG = plastic cable gland

### Dimensioned drawing

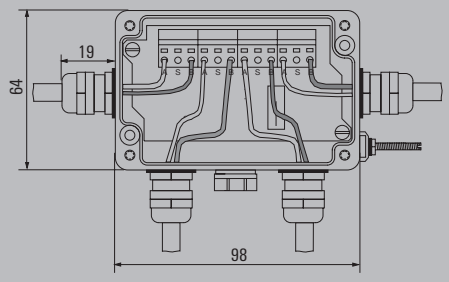


### Wiring diagram

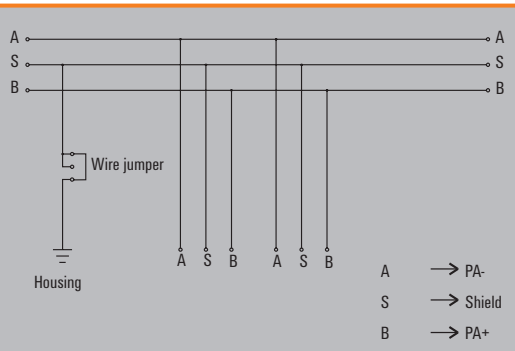


## 2-channel distributor Ex

**M12 connection**

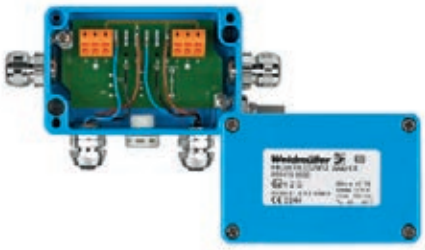

### Ordering data

| Type | Cable gland | QTY | Order No. |
|---|---|---|---|
| **Aluminium housing** | | | |
| FBCon PA CG/M12 2way Ex | branch line M12 | 1 | **8564160000** |
| **Stainless steel enclosure** | | | |

CG = brass cable gland
PCG = plastic cable gland

### Dimensioned drawing

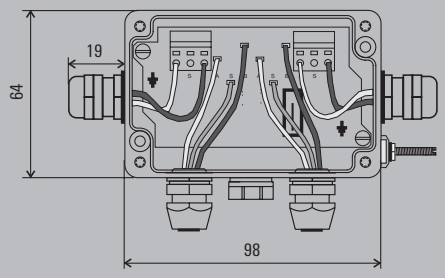


### Wiring diagram

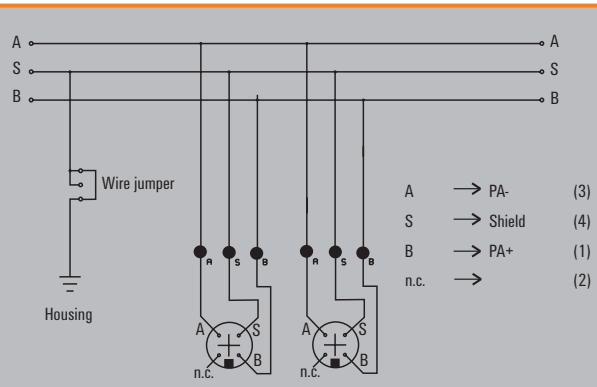

# PROFIBUS-PA - FBCon T-distributor ATEX Ex(ia)

## 4-channel distributor Ex

**Cable gland**

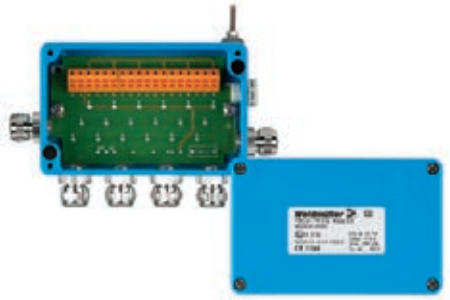

### Ordering data

| Type | Cable gland | QTY | Order No. |
|---|---|---|---|
| **Aluminium housing** | | | |
| FBCon PA CG 4way Ex | branch line CG | 1 | **8564200000** |
| **Stainless steel enclosure** | | | |

CG = brass cable gland
PCG = plastic cable gland

### Dimensioned drawing

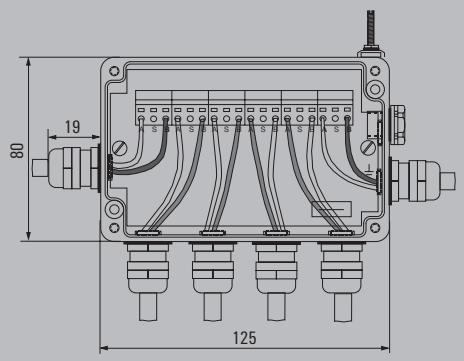


### Wiring diagram

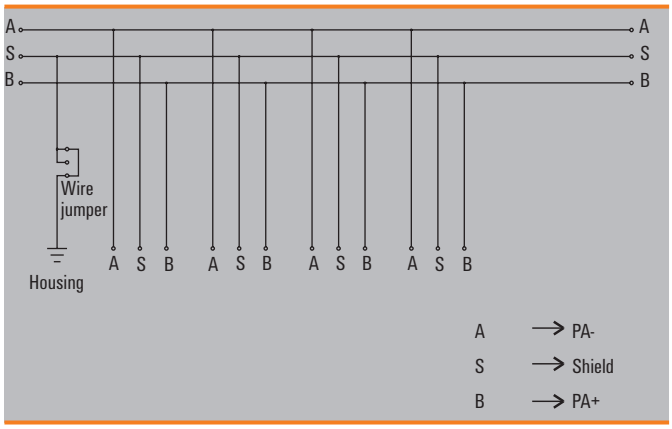


## 4-channel distributor Ex

**M12 connection**

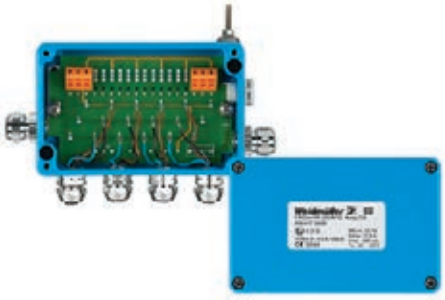

### Ordering data

| Type | Cable gland | QTY | Order No. |
|---|---|---|---|
| **Aluminium housing** | | | |
| FBCon PA CG/M12 4way Ex | branch line M12 | 1 | **8564170000** |
| **Stainless steel enclosure** | | | |

CG = brass cable gland
PCG = plastic cable gland

### Dimensioned drawing

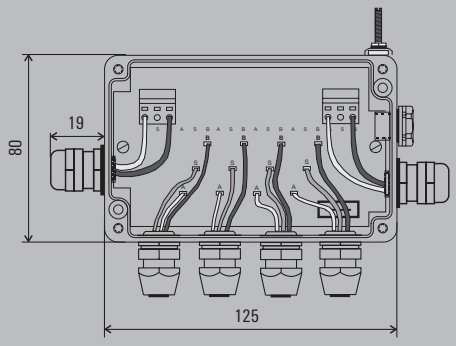


### Wiring diagram

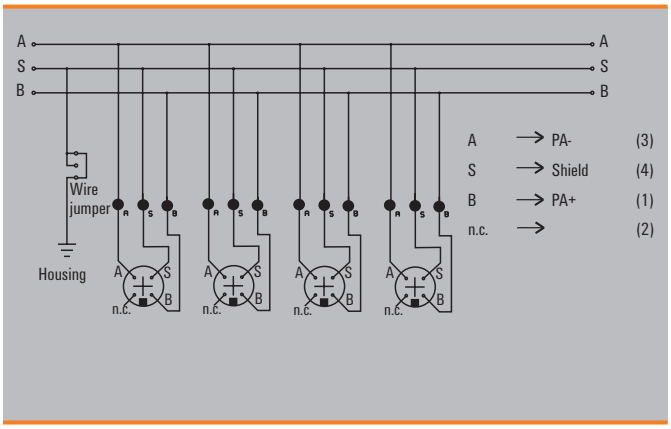

## 8-channel distributor Ex

**Cable gland**

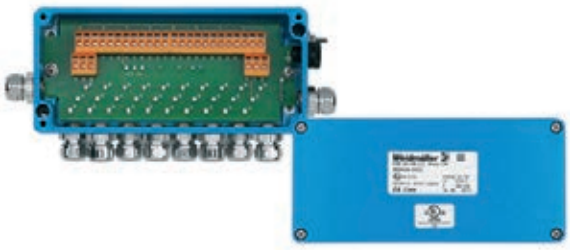

### Ordering data

| Type | Cable gland | QTY | Order No. |
|---|---|---|---|
| **Aluminium housing** | | | |
| FBCon PA CG 8way Ex | branch line CG | 1 | **8564240000** |
| **Stainless steel enclosure** | | | |

CG = brass cable gland
PCG = plastic cable gland

### Dimensioned drawing

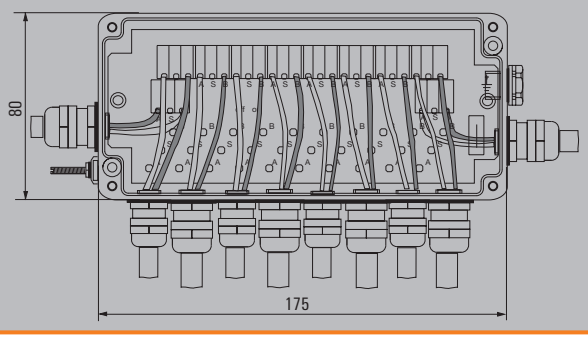


### Wiring diagram

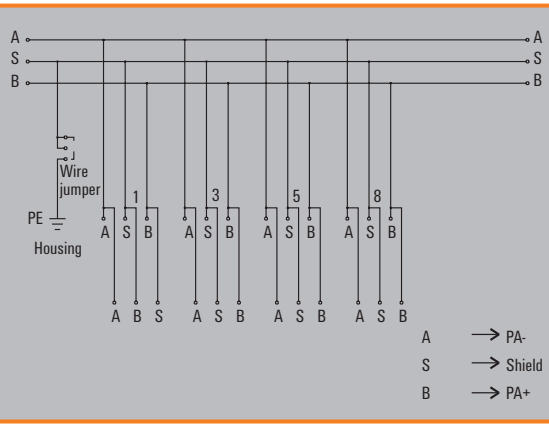


## 8-channel distributor Ex

**M12 connection**

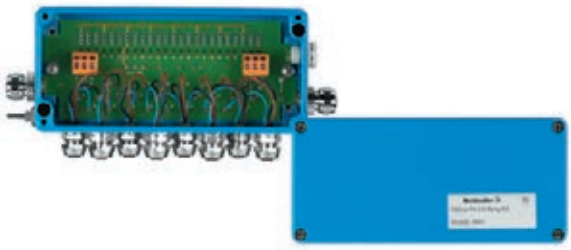

### Ordering data

| Type | Cable gland | QTY | Order No. |
|---|---|---|---|
| **Aluminium housing** | | | |
| FBCon PA CG/M12 8way Ex | branch line M12 | 1 | **8564250000** |
| **Stainless steel enclosure** | | | |

CG = brass cable gland
PCG = plastic cable gland

### Dimensioned drawing

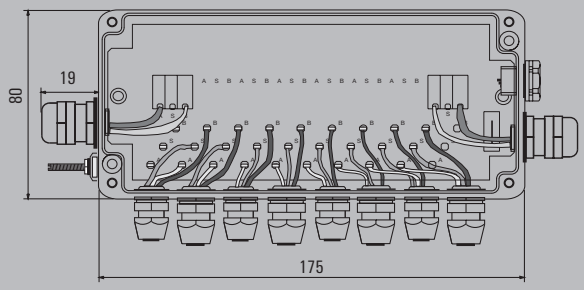


### Wiring diagram

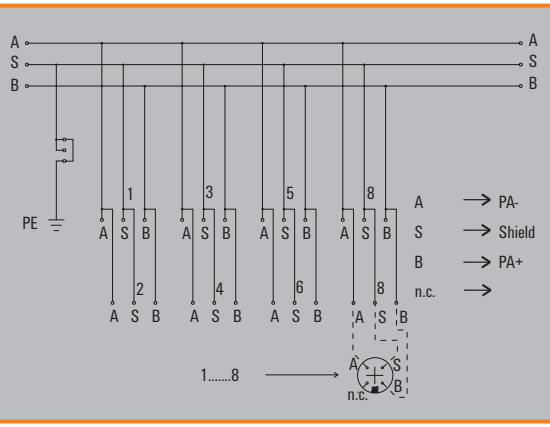

## FBCon bus terminator
## FBCon bus terminator without earth connection

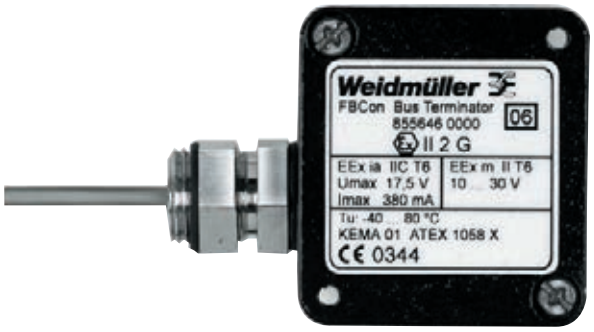


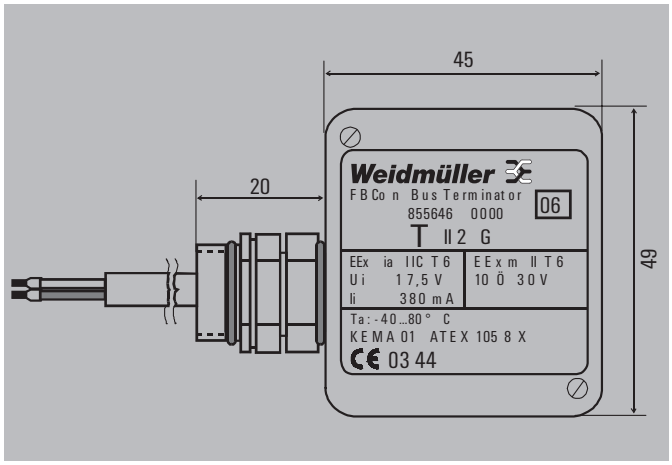


### Technical data

| | |
|---|---|
| Operating temperature | -40 °C to 80 °C |
| Ingress protection class | IP 66 |
| Enclosure material | High grade aluminium alloy (Al – Si 12) |
| Finish | Black powder-coated |
| Connection lead | 2 x 0.14 mm² |
| Cable entry | Bus adapter M16 |

### Ordering data

| Type | Qty. | Order No. |
|---|---|---|
| FBCon Bus Terminator EEx with locking clip, without earth connection | 1 | 8556460000 |
| FBCon Bus Terminator EEx without locking clip, without earth connection | 1 | 8606190000 |

### Wiring diagram

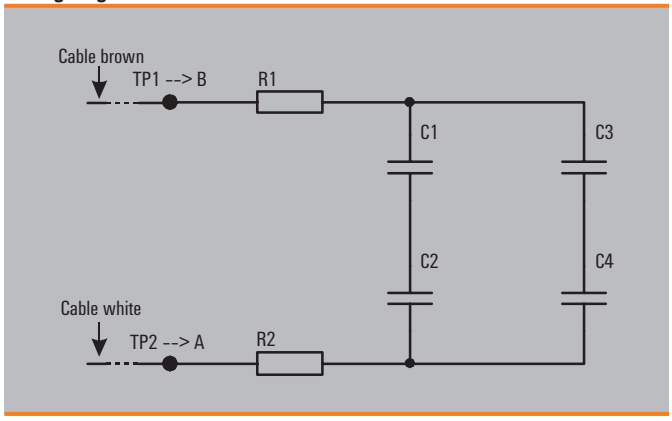


## FBCon Bus Terminator with earth connection

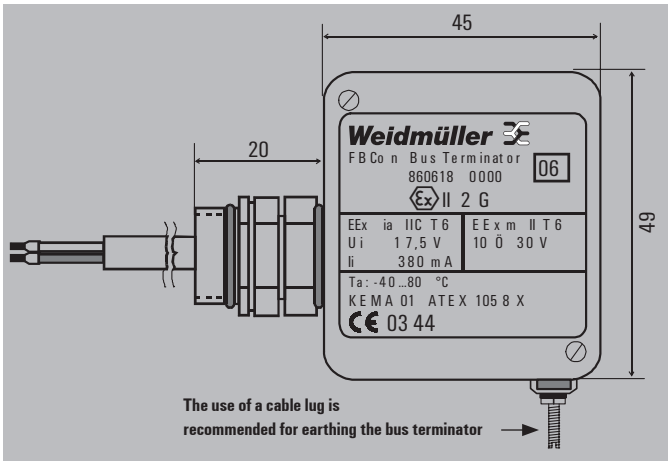


### Technical data

| | |
|---|---|
| Operating temperature | -40 °C to 80 °C |
| Ingress protection class | IP 66 |
| Enclosure material | High grade aluminium alloy (Al – Si 12) |
| Finish | Black powder-coated |
| Connection lead | 2 x 0.14 mm² |
| Cable entry | Bus adapter M16 |

### Ordering data

| Type | Qty. | Order No. |
|---|---|---|
| FBCon Bus Terminator EEx with locking clip, withearth connection | 1 | 8606180000 |
| FBCon Bus Terminator EEx without locking clip, with earth connection | 1 | 8606200000 |

### Housing cover without clip-on foot

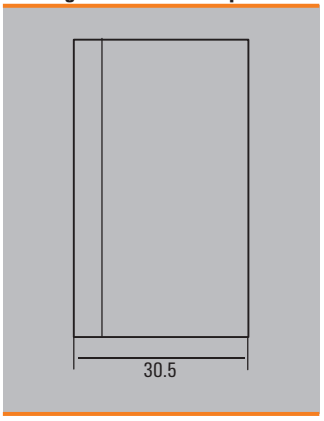


### Housing cover with clip-on foot

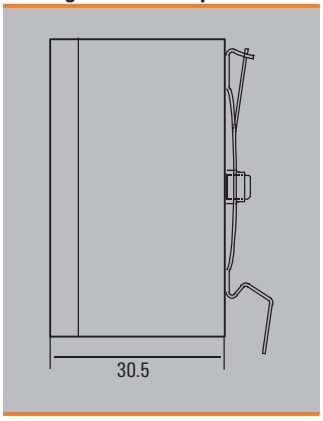

# Actuator-Sensor Interface Line

The new space-saving SAI AS-Interface family makes new applications possible. The narrow 24 mm form of the modules means that they can fit into a very small installation space. The length is also remarkable, since the M8 module with 4 connections is only 123 mm long.

The ribbon cable locks into the base part, while the coded cable rules out the possibility of misconnection. The piercing connectors make the module easy to connect with the help of a screwdriver. Pure input modules only require the yellow ribbon cable. The additional voltage for the outputs is fed to the module via the black cable.

The implementation of the new AS-Interface specification 3.0 means that modules with 8 inputs on one address with 62 slaves are possible in one network. Also modules with 4 inputs and 4 outputs with 62 slaves are now available. These modules require an M4 master.

All modules are certified by the AS-Interface Association and conform to the AS-Interface specifications.

The outputs, as well as the supply for sensors, are protected against short circuits and overload. These faults are signalled to the master using the peripheral bit. At the same time, the AS-I and fault LEDs blink alternately red/green in accordance with the AS-Interface specification.

All outputs can be simultaneously operated at the maximum current capacity of 0.5 A.

The housing has IP 67 class of protection, which guarantees resistance to water and dust. The addressing is performed via the infrared adapter with the user-friendly hand programming tool.

With the Weidmüller MultiCard markers, each I/O point can be individually marked, while a further marker is available for the complete module.

There are eight module versions, with four different I/O configurations available:

- 4 inputs
- 8 inputs
- 4 outputs
- 4 inputs and 4 outputs

Each I/O variant is available in two connection versions. The sensors or actuators can be connected with 5-pole M12 or 3-pole M8 plug-in connectors.

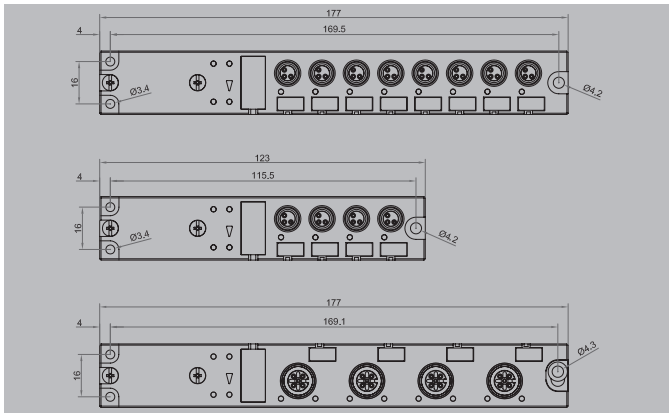

## SAI-ASI Line V3

### SAI-ASI Line

**M8**

### SAI-ASI Line

**M12**

## Ordering data

| IO variants | Type | Qty. | Order No. | Type | Qty. | Order No. |
|---|---|---|---|---|---|---|
| 4 inputs | SAI-ASI-L-M8-4I V3 | 1 | 1962640000 | SAI-ASI-L-M12-4I V3 | 1 | 1962680000 |
| 4 outputs | SAI-ASI-L-M8-4O V3 | 1 | 1962660000 | SAI-ASI-L-M12-4O V3 | 1 | 1962700000 |
| 4 inputs / 4 outputs | SAI-ASI-L-M8-4I/4O V3 | 1 | 1962670000 | SAI-ASI-L-M12-4I/4O V3 | 1 | 1962710000 |
| 8 inputs | SAI-ASI-L-M8-8I V3 | 1 | 1962650000 | SAI-ASI-L-M12-8I V3 | 1 | 1962690000 |
| **Note** | | | | | | |

## Technical specifications of bus system

| | |
|---|---|
| Bus user | Slave |
| No. of subscribers | 62 |
| Transmission rate | 167 kbits |
| Diagnosis indication | red |
| Station addresses | Infrared |
| AS interface spezifikation | V3.0 |
| **Note** | |

## Technical data

| | |
|---|---|
| **General data** | |
| Insulation material of housing | PBT |
| Flammability class UL 94 | V-0 |
| Operating temperature | -25 °C ... 60 °C |
| Storage temperature | -25 °C ... 85 °C |
| Protection class | IP 67 |
| **Electrical data** | |
| Rated voltage | 26.5 ...31.6 V |
| max. current-carrying capacity per output signal | 0.5 A |
| Output level | Short-circuit-protected |
| Total current max. | 2 A |
| Digital input type | TYPE 1 to EN 61131-2 |
| E/A function indicator | LED yellow |
| Sensor voltage indicator | LED green |

## Accessories

| Miscellaneous accessories | Type | Qty. | Order No. |
|---|---|---|---|
| M12 protective cap | SAI-SK-M12 | 30 | 9456050000 |
| M8 protective cap | SAI-SK M8 | 50 | 1802760000 |
| **Note** | | | |

# AS-Interface ribbon cables

## AS-Interface ribbon cable, rubber

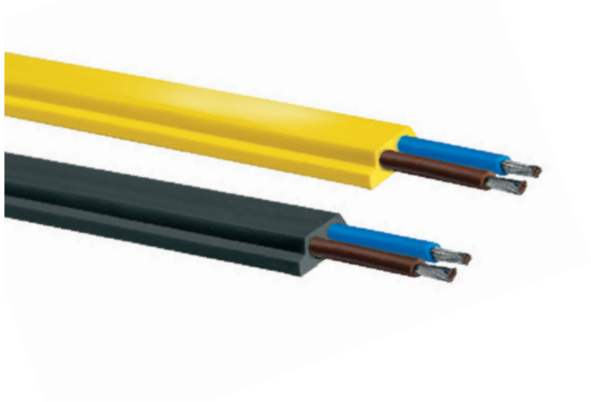

### Technical data

| | |
|---|---|
| Use | AS-Interface |
| Colour | yellow, black |
| Type of cable | profiled cable |
| Conductor cross-section | 2 x 1.5 mm² |
| Material | EPDM (rubber) |
| Halogen-free | yes |
| Temperature range (at rest) | –40 °C ... +85 °C |
| Temperature range (moving) | –25 °C ... +85 °C |
| Flammability class | flammable |
| Ozone/weather-resistant | partially resistant |
| Minimum bending radii | fixed: 12 mm<br>movable: 24 mm |
| Flexural properties | no break after 30,000<br>backward and forward movements |

### Ordering data

| Type | Designation | Qty. | Order No. |
|---|---|---|---|
| AS-KG-ge | Ribbon cable yellow | 100 m | **9455110000** |
| AS-KG-sw | Ribbon cable black | 100 m | **9455120000** |

## Coupling module single from ribbon cable to round cable

### Technical data

| | |
|---|---|
| Connection AS-Interface | ribbon cable |
| No. connectable cables | 1 |
| Type of cable | ribbon cable, yellow + black |
| Flexible lead cross-section | 1.5 mm² |
| Connection type | piercing technology |
| **Outlet line** | |
| Type of cable | PUR |
| Conductor cross-section | 0.34 mm² |
| Cable length | 2 m |
| Operating voltage | ≤ 40 V |
| Operating current | ≤ 4 A |
| **General data** | |
| Pollution severity DIN EN 0110 | 3 |
| Ambient temperature | –25 °C ... +75 °C |
| Storage temperature | –40 °C ... +85 °C |
| Housing material | PA 6-GF-FR |
| Shock resistance | 30 g/11 ms |
| Vibration resistance | 10 ... 55 Hz; 1.0 mm amplitude |
| **Specific data** | |
| Ingress protection class DIN 40050 | IP 67 |
| Weight | 20 g |
| M12 Pin assignment | |
| Pin 1: blue | AS-Interface „+" blue |
| Pin 3: brown | AS-Interface „–" brown |

### Ordering data

| Type | Qty. | Order No. |
|---|---|---|
| SAI-ASI T FR | 1 | **1925010000** |

## Bridge module ribbon cable

### Technical data

| | |
|---|---|
| Connection AS-Interface | ribbon cable |
| No. connectable cables | 2 |
| Type of cable | ribbon cable, yellow + black |
| Flexible lead cross-section | 1.5 mm² |
| Connection type | piercing technology |
| **Outlet line** | |
| Type of cable | PUR solid |
| Operating voltage | ≤ 40 V |
| Operating current | ≤ 4 A |
| **General data** | |
| Pollution severity DIN EN 0110 | 3 |
| Ambient temperature | -25 °C ... +75 °C |
| Storage temperature | -40 °C ... +85 °C |
| Housing material | PA 6-GF-FR |
| Shock resistance | 30 g/11 ms |
| Vibration resistance | 10 ... 55 Hz; 1.0 mm amplitude |
| **Specific data** | |
| Ingress protection class DIN 40050 | IP 65 |
| Weight | 20 g without cable |

### Ordering data

| Type | Qty. | Order No. |
|---|---|---|
| SAI-ASI T FF small | 1 | **1026090000** |

## Coupling module ribbon cable to round cable / yellow + black (2 m)

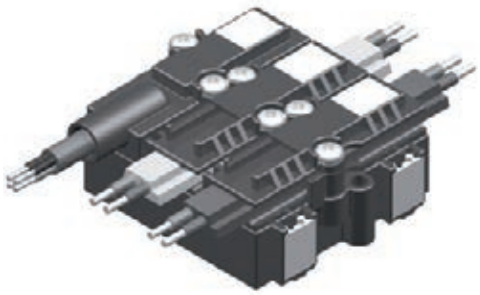

### Technical data

| | |
|---|---|
| Connection AS-Interface | ribbon cable |
| No. connectable cables | 2 |
| Type of cable | ribbon cable, yellow + black |
| Flexible lead cross-section | 1.5 mm² |
| Connection type | piercing technology |
| **Outlet line** | |
| Type of cable | PUR |
| Conductor cross-section | 0.34 mm² |
| Cable length | 2 m |
| Operating voltage | ≤ 40 V |
| Operating current | ≤ 4 A |
| **General data** | |
| Pollution severity DIN EN 0110 | 3 |
| Ambient temperature | -25 °C ... +75 °C |
| Storage temperature | -40 °C ... +85 °C |
| Housing material | PA 6-GF-FR |
| Shock resistance | 30 g/11 ms |
| Vibration resistance | 10 ... 55 Hz; 1.0 mm amplitude |
| **Specific data** | |
| Ingress protection class DIN 40050 | IP 65 / IP 67 |
| Weight | 50 g without cable |
| M12 Pin assignment | |
| Pin 1: brown | AS-Interface „+" |
| Pin 2: white | ext. power supply „-" |
| Pin 3: blue | AS-Interface „-" |
| Pin 4: black | ext. power supply „+" |

### Ordering data

| Type | Qty. | Order No. |
|---|---|---|
| SAI-ASI T FFR | 1 | **1924980000** |

## CAN/DeviceNet™ cables one end without connector

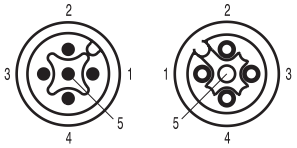


Male Female

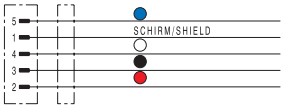


### Ordering data

| | | Type | 5-pole Order No. |
|---|---|---|---|
| **Male, straight** | | | |
| PUR/TPE | 1.5 m | SAIL-M12G-CD-1.5A | **1964700150** |
| PVC/PVC | 1.5 m | SAIL-M12G-CD-1.5B | **1060110150** |
| **Male, angled** | | | |
| PUR/TPE | 1.5 m | SAIL-M12W-CD-1.5A | **1062220150** |
| PVC/PVC | 1.5 m | SAIL-M12W-CD-1.5B | **1062170150** |
| **Female, straight** | | | |
| PUR/TPE | 1.5 m | SAIL-M12BG-CD-1.5A | **1964690150** |
| PVC/PVC | 1.5 m | SAIL-M12BG-CD-1.5B | **1060120150** |
| **Female, angled** | | | |
| PUR/TPE | 1.5 m | SAIL-M12BW-CD-1.5A | **1061980150** |
| PVC/PVC | 1.5 m | SAIL-M12BW-CD-1.5B | **1062180150** |
| **Note** | | Other versions on request | |

### Standard cable lengths

All cables listed under the ordering data have a length of 1.5 metres. The last four ordering digits must be changed when ordering other standard cable lengths.

| | |
|---|---|
| 1.5 m | xxxxxx0150 |
| 3.0 m | xxxxxx0300 |
| 5.0 m | xxxxxx0500 |
| 10.0 m | xxxxxx1000 |

### Technical data

| | |
|---|---|
| Sheathing colour | Black |
| Protection degree | IP 67 |
| Wire cross section | 2 x 0.34 + 2 x 0.22 mm² |
| Contact surface | Gold-plated |
| Temperature range of housing | -25...+85 °C |

Chapter W includes additional technical specifications for the cable

### Dimensioned drawing

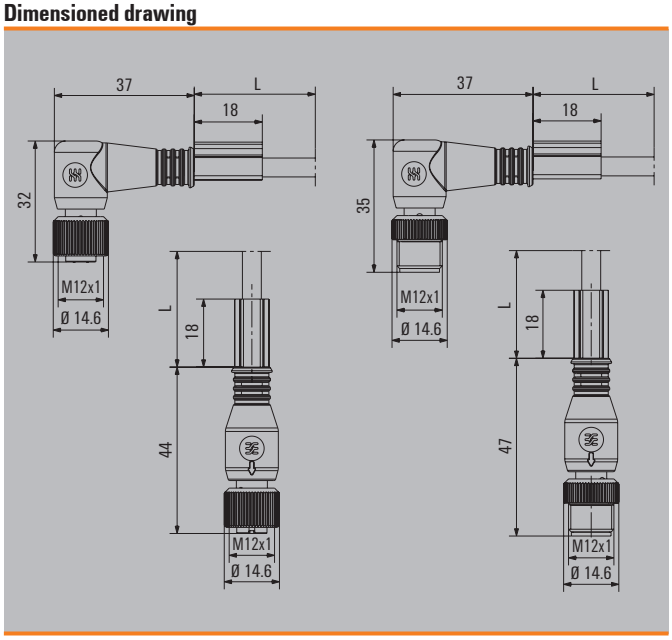

## CAN/DeviceNet™ cables
## connecting cables

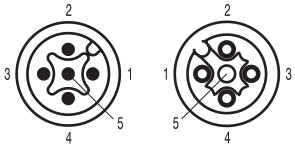


Male Female

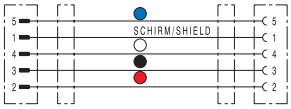


## Ordering data

| Type | Order No. | 5-pole |
|---|---|---|
| **Male, straight - Female, straight** | | |
| PUR/TPE 1.5 m | | |
| PVC/PVC 1.5 m | | |
| **Male, straight - Female, angled** | | |
| PUR/TPE 1.5 m | | |
| PVC/PVC 1.5 m | | |
| **Male, angled - Female, angled** | | |
| PUR/TPE 1.5 m | | |
| PVC/PVC 1.5 m | | |
| **Note** | | |

| Type | Order No. | 5-pole |
|---|---|---|
| | | |
| SAIL-M12GM12G-CD-1.5A | 1964710150 | |
| SAIL-M12GM12G-CD-1.5B | 1060130150 | |
| | | |
| SAIL-M12GM12W-CD-1.5A | 1061990150 | |
| SAIL-M12GM12W-CD-1.5B | 1062190150 | |
| | | |
| SAIL-M12WM12W-CD-1.5A | 1062150150 | |
| SAIL-M12WM12W-CD-1.5B | 1062210150 | |
| Other versions on request | | |

## Standard cable lengths

All cables listed under the ordering data have a length of 1.5 metres. The last four ordering digits must be changed when ordering other standard cable lengths.

| | |
|---|---|
| 1.5 m | xxxxxx0150 |
| 3.0 m | xxxxxx0300 |
| 5.0 m | xxxxxx0500 |
| 10.0 m | xxxxxx1000 |

## Technical data

| | |
|---|---|
| Sheathing colour | Black |
| Protection degree | IP 67 |
| Wire cross section | 2 x 0.34 + 2 x 0.22 mm² |
| Contact surface | Gold-plated |
| Temperature range of housing | -25...+85 °C |

Chapter W includes additional technical specifications for the cable

## Dimensioned drawing

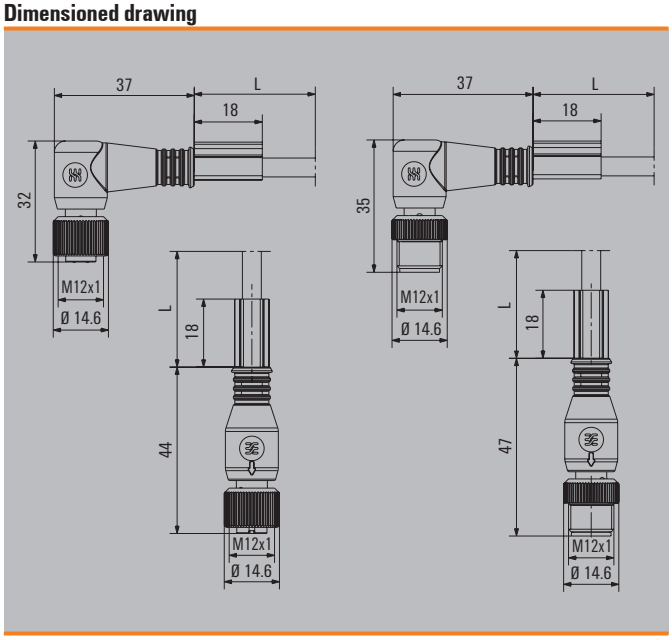

## CAN/DeviceNet™ cables
## Connecting cables

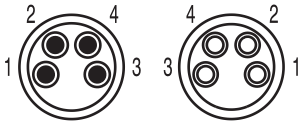


Male Female

## Technical data

| | |
|---|---|
| Operating voltage | Max. 300 V peak |
| Wire | Conductor: copper wire, without insulation, AWG 24, 7-wire Insulation: PE 2Y |
| Quad | 4 wires according to 3.1 are stranded in group of four |
| Stranding sequence | Brown, green, white, yellow |
| Wrapping | Plastic foil |
| Shield | Braiding tin-plated copper, opt. Coverage ≥ 85 % |
| Outer cladding | PVC, YM |
| **Electrical properties** | |
| Conductor resistance (at 20 °C) | ≤ 87 Ω/km |
| Insulation resistance | ≤ 1 GΩ x km |
| Dielectric strength (50 Hz 1 min.) | Wire/wire 1000 V |
| Characteristic impedance 1-1000 KHz | nom. 100-120 Ω |
| Operational capacity | nom. 56 pF/m |
| **Mechanical characteristics** | |
| Min. permitted bending radius | One time: 7.5 x cable diameter<br>Multiple times: 15 x cable diameter |
| Max. permitted tensile load | Static: 50 N/mm²<br>Dynamic: 20 N/mm² |
| Weight | Approx. 78 kg/km |
| **Thermal characteristics** | |
| moving | -20 °C to 70 °C |
| Stationary | -40 °C to 70 °C |

**Note**

## Dimensioned drawing

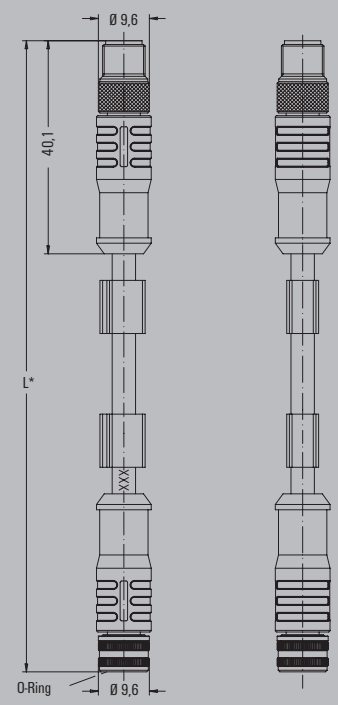


L in the drawing is the cable length

## Ordering data

| | Type | Qty. | 2-pole Order No. |
|---|---|---|---|
| 0.2 m | SAIL-M8GM8G-4S-0.2-CAN | | 1216820020 |
| 0.25 m | SAIL-M8GM8G-4S-0.25-CAN | | 1216820025 |
| 0.3 m | SAIL-M8GM8G-4S-0.3-CAN | | 1216820030 |
| 0.5 m | SAIL-M8GM8G-4S-0.5-CAN | | 1216820050 |
| 0.8 m | SAIL-M8GM8G-4S-0.8-CAN | | 1216820080 |
| 1.0 m | SAIL-M8GM8G-4S-1.0-CAN | | 1216820100 |
| 1.5 m | SAIL-M8GM8G-4S-1.5-CAN | | 1216820150 |
| 3.0 m | SAIL-M8GM8G-4S-3.0-CAN | | 1216820300 |
| 3.5 m | SAIL-M8GM8G-4S-3.5-CAN | | 1216820350 |
| 5.0 m | SAIL-M8GM8G-4S-5.0-CAN | | 1216820500 |
| 7.0 m | SAIL-M8GM8G-4S-7.0-CAN | | 1216820700 |
| 10.0 m | SAIL-M8GM8G-4S-10-CAN | | 1216821000 |

**Note**

The four-pole Standard M8 sensor cables are especially well suited for the Universal Pro system.
With their diameter of 0.34 mm², these cables allow a system to be expanded up to 50 meters.
The 360° shielding guarantees that signal transmission is error-free.

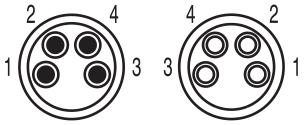


**Male** **Female**

## Universal Pro cables

## Terminating resistor

## Technical data

| Cable construction | |
|---|---|
| No. of poles | 4 |
| Sheathing colour | grey |
| Material | PUR/PUR |
| Core cross-section | 0.34 mm² |
| Contact surface | Gold-plated |
| Nominal voltage | 30 V |
| Rated current | 4 A |
| Protection class | IP 67 |
| Ambient temperature, min. | -30 °C |
| Ambient temperature, max. | 90 °C |
| **Note** | |

## Ordering data

| Male, straight - female, straight | Type | Qty. | Order No. |
|---|---|---|---|
| 0.3 m | SAIL-M8GM8G-4S-0.3Q-SB | 1 | 1981900030 |
| 1.0 m | SAIL-M8GM8G-4S-1.0Q-SB | 1 | 1981900100 |
| 1.5 m | SAIL-M8GM8G-4S-1.5U-SB | 1 | 1981900150 |
| 3.0 m | SAIL-M8GM8G-4S-3.0Q-SB | 1 | 1981900300 |
| 5.0 m | SAIL-M8GM8G-4S-5.0Q-SB | 1 | 1981900500 |
| 10.0 m | SAIL-M8GM8G-4S-10Q-SB | 1 | 1981901000 |
| 15.0 m | SAIL-M8GM8G-4S-15Q-SB | 1 | 1981901500 |
| 20.0 m | SAIL-M8GM8G-4S-20Q-SB | 1 | 1981902000 |
| **Female, straight - open end** | | | |
| 1.5 m | SAIL-M8BG-4S-1.5U-SB | 1 | 1981910150 |
| 3.0 m | SAIL-M8BG-4S-3.0Q-SB | 1 | 1981910300 |
| 5.0 m | SAIL-M8BG-4S-5.0Q-SB | 1 | 1981910500 |
| 10.0 m | SAIL-M8BG-4S-10Q-SB | 1 | 1981911000 |
| **Note** | Other versions on request | | |

## Ordering data – Terminating resistor

| | Type | Qty. | Order No. |
|---|---|---|---|
| | SAI END CAN M8 4P | 1 | 1955340000 |
| **Note** | | | |

## Dimensioned drawing

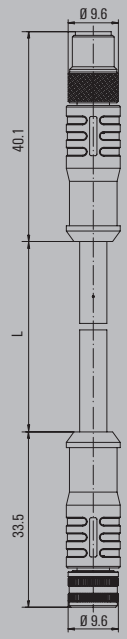


L in the drawing is the cable length

## CAN / DeviceNet™ bulk lengths

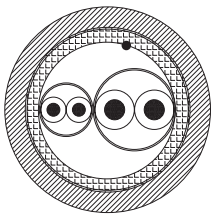

## Technical data

| | |
|---|---|
| **Component A (1x2x0.34) ST** | |
| Conductor | Tin-plated copper 0.34 mm2 (19 wires) according to UL 1581 Tab 20.1 |
| Insulation | Polyolefine mixture according to UL Style 80 °C 30 V colour code: 2 conductor red/black Diameter: 1.6 ±0.1 mm |
| Assembly | Two twisted conductors + aluminium-polyester band (Ai exterior) |
| **Element B (1x2x0.22) ST** | |
| Conductor | Tin-plated copper 0.22 mm² (19 wires) according to UL 1581 Tab 20.1 |
| Insulation | Polyethylene foam skin Colour code: 2 conductors white/blue Diameter: approx. 2.0 mm |
| Assembly | Two twisted conductors + aluminium-polyester band (Ai exterior) |
| Complete assembly | Element A + Element B drilled |
| Drain wire | Tin-plated copper 0.34 mm² (19 wires) according to UL 1581 Tab 20.1 |
| Shield | Tin-plated copper braiding, coverage 85 ± 5 % |
| Band | Fibre band |
| Outer cladding | Polyurethane mixture according to UL Style 80 °C 30 V Colour code: black RAL 9005 |
| Marking | Not required |
| **General characteristics** | |
| Nom. impedance 0.3-20 MHz | (pair 2 x 0.22 mm²) - 120 ±10 % Ω |
| Nominal power rating 800 Hz | (pair 2 x 0.22 mm²) - 39 pF/mt |
| Operating voltage | Low-voltage computer cable |
| Test voltage | 1000 V |
| Conductor resistance | Conductor A: max. 55 Ω/km at 20 °C Conductor B: max. 90 Ω/km at 20 °C |
| Min. bending radius | 5 x D (during installation) 10 x D (during operations) |
| Temperature range | -40 °C...+80 °C (during installation) -10 °C ... +80 °C (during operations) |
| Reference | UL 1581 |
| Attenuation (max.) | 0.5 MHz ... 1.64 bd/100 mt |
| (pair 0.22 mm²) | 1.0 MHz ... 2.30 db/100 mt |
| Max. speed | 180 mt/min |
| Max. acceleration | 5 mt/s² |
| Copper weight | 33.6 kg/km (approx.) |
| Total weight | 79 kg/km (approx.) |

| | |
|---|---|
| **Note** | |

## Ordering data

| | Type | Order No. |
|---|---|---|
| 4-pole | SAIH-CD-2x0.34/2x0.22-PURs | 1058630000 |
| **Note** | | |

## Screw connection M12, metal (EMC)

### SAIS / SAIB

straight

### SAISW / SAIBW

Angled

## Ordering data

| Male | | | |
|---|---|---|---|
| | 5-pole. PG 9 | | |
| **Socket** | | | |
| | 5-pole. PG 9 | | |
| **Note** | | | |

| Type | Qty. | Order No. |
|---|---|---|
| SAIS-M-5/8S M12 5P A-COD | 1 | 1784740000 |
| | | |
| SAIB-M-5/8S M12 5P A-COD | 1 | 1784750000 |
| Other versions on request | | |

| Type | Qty. | Order No. |
|---|---|---|
| SAISW-M-5/8 M12 | 1 | 1803940000 |
| | | |
| SAIBW-M-5/8 M12 | 1 | 1803920000 |
| Other versions on request | | |

## Technical data

| | | |
|---|---|---|
| Type of connection | Screw connection | Screw connection |
| Housing main material | CuZn | CuZn |
| Contact tube diameter | M12 | M12 |
| Cable diameter | 4...6 mm (PG7)/ 6...8 mm (PG9) | 6...8 mm (PG9) |
| Wire cross-section, min. / max. | 0.14...0.75 mm² | 0.14...0.5 mm² |
| Rated current | 4 A | 4 A |
| Rated voltage | 125 V | 125 V |
| Temperature range of housing | -25...+85 °C | -25...+85 °C |
| Protection degree | IP 67 | IP 67 |
| Contact surface | Gold-plated | Gold-plated |
| **Note** | Torque, see E.12 | Torque, see E.12 |

Torque, see E.12

## Dimensioned drawing

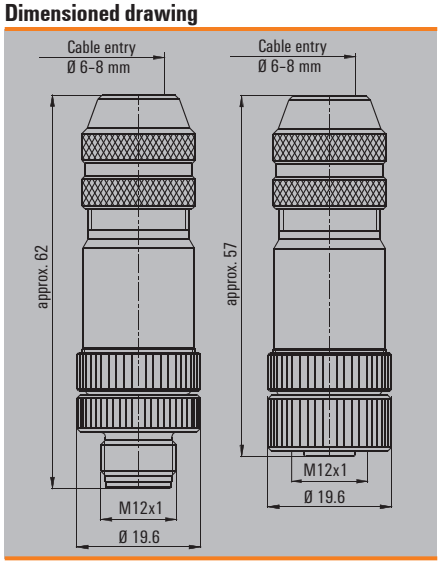


## Dimensioned drawing

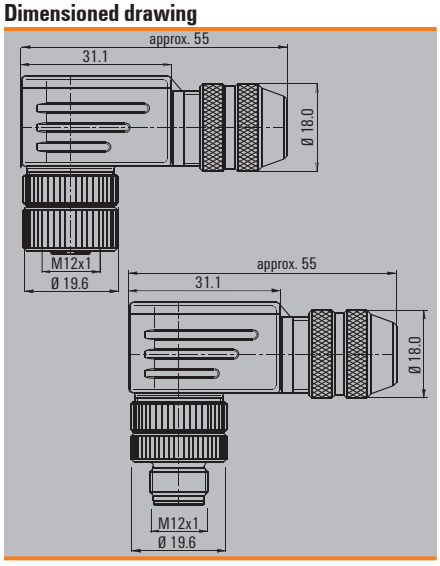

## EtherCAT - lines (M8)

### EtherCAT lines

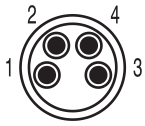


Male

RJ45

### Ordering data

| | M8 Male-Open-Ended | 4-pole | M8 Male-Male | 4-pole | M8 Male-RJ45 | 4-pole |
|---|---|---|---|---|---|---|
| | Type | Order No. | Type | Order No. | Type | Order No. |
| 0.1 m | SAIL-M8G-4S0.1UIE | 1160820010 | SAIL-M8GM8SG-4S0.1UIE | 1160930010 | | |
| 0.3 m | SAIL-M8G-4S0.3UIE | 1160820030 | SAIL-M8GM8SG-4S0.3UIE | 1160930030 | | |
| 0.5 m | SAIL-M8G-4S0.5UIE | 1160820050 | SAIL-M8GM8SG-4S0.5UIE | 1160930050 | | |
| 1.0 m | SAIL-M8G-4S1.0UIE | 1160820100 | SAIL-M8GM8SG-4S1.0UIE | 1160930100 | | |
| 2.0 m | SAIL-M8G-4S2.0UIE | 1160820200 | SAIL-M8GM8SG-4S2.0UIE | 1160930200 | SAIL-M8GRJ45-4S2.0UIE | 1201210200 |
| 3.0 m | SAIL-M8G-4S3.0UIE | 1160820300 | SAIL-M8GM8SG-4S3.0UIE | 1160930300 | | |
| 4.0 m | SAIL-M8G-4S4.0UIE | 1160820400 | SAIL-M8GM8SG-4S4.0UIE | 1160930400 | | |
| 5.0 m | SAIL-M8G-4S5.0UIE | 1160820500 | SAIL-M8GM8SG-4S5.0UIE | 1160930500 | SAIL-M8GRJ45-4S5.0UIE | 1201210500 |
| 7.5 m | SAIL-M8G-4S7.5UIE | 1160820750 | SAIL-M8GM8SG-4S7.5UIE | 1160930750 | SAIL-M8GRJ45-4S7.5UIE | 1201210750 |
| 10.0 m | SAIL-M8G-4S10UIE | 1160821000 | | | SAIL-M8GRJ45-4S10UIE | 1201211000 |
| 15.0 m | | | SAIL-M8GM8SG-4S15UIE | 1160931500 | | |
| 20.0 m | | | SAIL-M8GM8SG-4S20UIE | 1160932000 | | |
| 30.0 m | | | SAIL-M8GM8SG-4S30UIE | 1160933000 | | |
| 40.0 m | | | SAIL-M8GM8SG-4S40UIE | 1160934000 | | |
| 50.0 m | | | SAIL-M8GM8SG-4S50UIE | 1160935000 | | |
| Note | | | | | | |

### Standard cable lengths

| | | |
|---|---|---|
| All cables listed under the ordering data have a length of 1.5 metres. The last four ordering digits must be changed when ordering other standard cable lengths. | 1.5 m | xxxxxx0150 |
| | 3.0 m | xxxxxx0300 |
| | 5.0 m | xxxxxx0500 |
| | 10.0 m | xxxxxx1000 |

### Technical data

| | |
|---|---|
| Protection degree | IP 67 |
| Contact surface | Gold-plated |
| Sheathing colour | Green |
| Temperature range of housing | -25...+85 °C |
| Core cross-section | 0.15 |

Chapter W includes additional technical specifications for the cable

### Dimensioned drawing

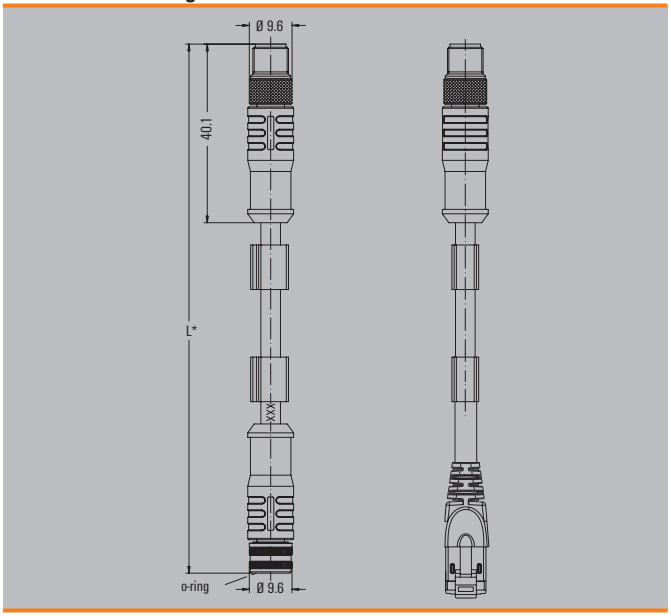

## Assembled cable - dragline cable M12

- Cat.5
- PUR
- D-coded
- PROFINET type C

### M12 / M12

| M12 | | M12 |
|---|---|---|
| 1 | yellow | 1 |
| 2 | white | 2 |
| 3 | orange | 3 |
| 4 | blue | 4 |

### M12 / M12

| M12 | | M12 |
|---|---|---|
| 1 | yellow | 1 |
| 2 | white | 2 |
| 3 | orange | 3 |
| 4 | blue | 4 |

## Technical data

| | | |
|---|---|---|
| Product type | Dragline cable | Dragline cable |
| Category | Cat.5 (ISO/IEC 11801) / Cat.5e (TIA T568-B) | Cat.5 (ISO/IEC 11801) / Cat.5e (TIA T568-B) |
| Shielding | SF/UTP | SF/UTP |
| Version connector left / Version connector right | M12 IP 67 straight male / M12 IP 67 straight male | M12 IP 67 straight male / M12 IP 67 straight socket |
| Cross-section | 4*AWG 22/7 - 0.36 mm² | 4*AWG 22/7 - 0.36 mm² |
| Sheath diameter, max. | 6.7 mm | 6.7 mm |
| Material sheath | PUR | PUR |
| Sheathing colour | green (RAL 6018) | green (RAL 6018) |
| Insulation cross-section | 1.5 mm | 1.5 mm |
| Min. bending radius, repetitive | 7.5 *diameter | 7.5 *diameter |
| Min. bending radius, once only | 5 *diameter | 5 *diameter |
| Bending cycles | 3 Mio | 3 Mio |
| Speed | 180 m/min | 180 m/min |
| Acceleration | 4 m/s² | 4 m/s² |
| Pulling force | ≤ 150 N | ≤ 150 N |
| Ambient temperature (operational) | -40 °C...+70 °C | -40 °C...+70 °C |
| Installation temperature | -20 °C...+60 °C | -20 °C...+60 °C |
| Storage temperature | -50 °C...+70 °C | -50 °C...+70 °C |
| Abrasion resistance | very good | very good |
| Halogen | in accordance with IEC 60754-2 | in accordance with IEC 60754-2 |
| Resistance to spread of flame | in accordance with IEC 60332-1 | in accordance with IEC 60332-1 |
| Resistance to oils | in accordance with IEC 60811-2-1 | in accordance with IEC 60811-2-1 |
| **Note** | | |

## Ordering data

| | Type | QTY | Order No. | Type | QTY | Order No. |
|---|---|---|---|---|---|---|
| 0,5 m | IE-C5DD4UG0005MCSMCS-E | 1 | 1025950005 | | | |
| 1,5 m | IE-C5DD4UG0015MCSMCS-E | 1 | 1025950015 | IE-C5DD4UG0015MSSMCS-E | 1 | 1059330015 |
| 3 m | IE-C5DD4UG0030MCSMCS-E | 1 | 1025950030 | IE-C5DD4UG0030MSSMCS-E | 1 | 1059330030 |
| 5 m | IE-C5DD4UG0050MCSMCS-E | 1 | 1025950050 | IE-C5DD4UG0050MSSMCS-E | 1 | 1059330050 |
| 10 m | IE-C5DD4UG0100MCSMCS-E | 1 | 1025950100 | IE-C5DD4UG0100MSSMCS-E | 1 | 1059330100 |
| **Note** | | | | | | |

## Accessories

| | Type | QTY | Order No. | Type | QTY | Order No. |
|---|---|---|---|---|---|---|
| **Sheathing stripper** | | | | | | |
| For UTP and STP data cables | AM 12 | 1 | 9030060000 | AM 12 | 1 | 9030060000 |
| For coaxial and round data cables | IE-CST | 1 | 9204350000 | IE-CST | 1 | 9204350000 |
| **Markers** | | | | | | |
| Insertion label, yellow, 12 mm | TM-I 12 NEUTRAL GE | 320 | 1718411687 | TM-I 12 NEUTRAL GE | 320 | 1718411687 |
| Insertion label, yellow, 18 mm | TM-I 18 NEUTRAL GE | 320 | 1718431687 | TM-I 18 NEUTRAL GE | 320 | 1718431687 |
| Transparent sleeves, 12-mm length | TM 4/12 HF/HB | 500 | 1719840000 | TM 4/12 HF/HB | 500 | 1719840000 |
| Transparent sleeves, 18-mm length | TM 4/18 HF/HB | 500 | 1719850000 | TM 4/18 HF/HB | 500 | 1719850000 |
| Wire and cable marker, ø 4,7 - 7,4 mm | VT SF 5/21 NEUTRAL WS V0 | 160 | 1689470001 | VT SF 5/21 NEUTRAL WS V0 | 160 | 1689470001 |
| Wire and cable marker, ø 5,8 - 7,8 mm | VT SF 6/21 NEUTRAL WS V0 | 160 | 1730560001 | VT SF 6/21 NEUTRAL WS V0 | 160 | 1730560001 |
| **Note** | | | | | | |

## Assembled cable - dragline cable M12

- Cat.5
- PUR
- D-coded
- PROFINET type C

### M12 / open

| | M12 |
|---|---|
| yellow | 1 |
| white | 2 |
| orange | 3 |
| blue | 4 |

### M12 / RJ45

| RJ45 | | M12 |
|---|---|---|
| 1 | yellow | 1 |
| 3 | white | 2 |
| 2 | orange | 3 |
| 6 | blue | 4 |

## Technical data

| | | |
|---|---|---|
| Product type | Dragline cable | Dragline cable |
| Category | Cat.5 (ISO/IEC 11801) / Cat.5e (TIA T568-B) | Cat.5 (ISO/IEC 11801) / Cat.5e (TIA T568-B) |
| Shielding | SF/UTP | SF/UTP |
| Version connector left / Version connector right | M12 IP 67 straight male / Open | M12 IP 67 straight male / RJ45 IP 20 |
| Cross-section | 4*AWG 22/7 - 0.36 mm² | 4*AWG 22/7 - 0.36 mm² |
| Sheath diameter, max. | 6.7 mm | 6.7 mm |
| Material sheath | PUR | PUR |
| Sheathing colour | green (RAL 6018) | green (RAL 6018) |
| Insulation cross-section | 1.5 mm | 1.5 mm |
| Min. bending radius, repetitive | 7.5 *diameter | 7.5 *diameter |
| Min. bending radius, once only | 5 *diameter | 5 *diameter |
| Bending cycles | 3 Mio | 3 Mio |
| Speed | 180 m/min | 180 m/min |
| Acceleration | 4 m/s² | 4 m/s² |
| Pulling force | ≤ 150 N | ≤ 150 N |
| Ambient temperature (operational) | -40 °C...+70 °C | -40 °C...+70 °C |
| Installation temperature | -20 °C...+60 °C | -20 °C...+60 °C |
| Storage temperature | -50 °C...+70 °C | -50 °C...+70 °C |
| Abrasion resistance | very good | very good |
| Halogen | in accordance with IEC 60754-2 | in accordance with IEC 60754-2 |
| Resistance to spread of flame | in accordance with IEC 60332-1 | in accordance with IEC 60332-1 |
| Resistance to oils | in accordance with IEC 60811-2-1 | in accordance with IEC 60811-2-1 |
| **Note** | | |

## Ordering data

| | Type | QTY | Order No. | Type | QTY | Order No. |
|---|---|---|---|---|---|---|
| 1 m | | | | IE-C5DD4UG0010MCSA20-E | 1 | **1044470010** |
| 1,5 m | IE-C5DD4UG0015MCSXXX-X | 1 | **1025940015** | IE-C5DD4UG0015MCSA20-E | 1 | **1044470015** |
| 3 m | IE-C5DD4UG0030MCSXXX-X | 1 | **1025940030** | IE-C5DD4UG0030MCSA20-E | 1 | **1044470030** |
| 5 m | IE-C5DD4UG0050MCSXXX-X | 1 | **1025940050** | IE-C5DD4UG0050MCSA20-E | 1 | **1044470050** |
| 10 m | IE-C5DD4UG0100MCSXXX-X | 1 | **1025940100** | IE-C5DD4UG0100MCSA20-E | 1 | **1044470100** |
| **Note** | | | | | | |

## Accessories

| **Sheathing stripper** | Type | QTY | Order No. | Type | QTY | Order No. |
|---|---|---|---|---|---|---|
| For UTP and STP data cables | AM 12 | 1 | **9030060000** | AM 12 | 1 | **9030060000** |
| For coaxial and round data cables | IE-CST | 1 | **9204350000** | IE-CST | 1 | **9204350000** |
| **Markers** | | | | | | |
| Insertion label, yellow, 12 mm | TM-I 12 NEUTRAL GE | 320 | **1718411687** | TM-I 12 NEUTRAL GE | 320 | **1718411687** |
| Insertion label, yellow, 18 mm | TM-I 18 NEUTRAL GE | 320 | **1718431687** | TM-I 18 NEUTRAL GE | 320 | **1718431687** |
| Transparent sleeves, 12-mm length | TM 4/12 HF/HB | 500 | **1719840000** | TM 4/12 HF/HB | 500 | **1719840000** |
| Transparent sleeves, 18-mm length | TM 4/18 HF/HB | 500 | **1719850000** | TM 4/18 HF/HB | 500 | **1719850000** |
| Wire and cable marker, ø 4,7 - 7,4 mm | VT SF 5/21 NEUTRAL WS V0 | 160 | **1689470001** | VT SF 5/21 NEUTRAL WS V0 | 160 | **1689470001** |
| Wire and cable marker, ø 5,8 - 7,8 mm | VT SF 6/21 NEUTRAL WS V0 | 160 | **1730560001** | VT SF 6/21 NEUTRAL WS V0 | 160 | **1730560001** |
| **Note** | | | | | | |

## Assembled cable - M12 dragline cable, angled

- Cat.5
- PUR
- D-coded
- PROFINET type C

### M12 / M12

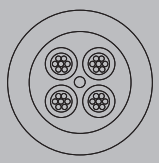

### M12 / M12

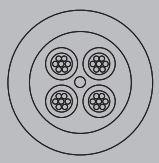

## Technical data

| | | |
|---|---|---|
| Product type | Dragline cable | Dragline cable |
| Category | Cat.5 (ISO/IEC 11801) / Cat.5e (TIA T568-B) | Cat.5 (ISO/IEC 11801) / Cat.5e (TIA T568-B) |
| Shielding | SF/UTP | SF/UTP |
| Version connector left / Version connector right | M12 IP 67 straight male / M12 IP 67 angled male | M12 IP 67 angled male / M12 IP 67 angled male |
| Cross-section | 4*AWG 22/7 - 0.36 mm² | 4*AWG 22/7 - 0.36 mm² |
| Sheath diameter, max. | 6.7 mm | 6.7 mm |
| Material sheath | PUR | PUR |
| Sheathing colour | green (RAL 6018) | green (RAL 6018) |
| Insulation cross-section | 1.5 mm | 1.5 mm |
| Min. bending radius, repetitive | 7.5 *diameter | 7.5 *diameter |
| Ambient temperature (operational) | -40 °C...+70 °C | -40 °C...+70 °C |
| Installation temperature | -20 °C...+60 °C | -20 °C...+60 °C |
| Storage temperature | -50 °C...+70 °C | -50 °C...+70 °C |
| Abrasion resistance | very good | very good |
| Halogen | in accordance with IEC 60754-2 | in accordance with IEC 60754-2 |
| Resistance to oils | in accordance with IEC 60811-2-1 | in accordance with IEC 60811-2-1 |
| Fire safety for railway vehicles | | |

**Note**

## Ordering data

| Cat.5 PROFINET, PUR, M12 straight-M12 angled | Type | QTY | Order No. | Type | QTY | Order No. |
|---|---|---|---|---|---|---|
| 1,5 m | IE-C5DD4UG0015MCSMCA-E | 1 | **1059770015** | | | |
| 3,0 m | IE-C5DD4UG0030MCSMCA-E | 1 | **1059770030** | | | |
| 5,0 m | IE-C5DD4UG0050MCSMCA-E | 1 | **1059770050** | | | |
| 10,0 m | IE-C5DD4UG0100MCSMCA-E | 1 | **1059770100** | | | |
| **Cat.5 PROFINET, PUR, M12 angled-M12 angled** | | | | | | |
| 1,5 m | | | | IE-C5DD4UG0015MCAMCA-E | 1 | **1059890015** |
| 3,0 m | | | | IE-C5DD4UG0030MCAMCA-E | 1 | **1059890030** |
| 5,0 m | | | | IE-C5DD4UG0050MCAMCA-E | 1 | **1059890050** |
| 10,0 m | | | | IE-C5DD4UG0100MCAMCA-E | 1 | **1059890100** |
| **Cat.5, PUR, M12 angled-open** | | | | | | |
| 1,5 m | | | | | | |
| 3,0 m | | | | | | |
| 5,0 m | | | | | | |
| 10,0 m | | | | | | |

**Note**

## Accessories

| Markers | Type | QTY | Order No. | Type | QTY | Order No. |
|---|---|---|---|---|---|---|
| Insertion label, yellow, 12 mm | TM-I 12 NEUTRAL GE | 320 | **1718411687** | TM-I 12 NEUTRAL GE | 320 | **1718411687** |
| Insertion label, yellow, 18 mm | TM-I 18 NEUTRAL GE | 320 | **1718431687** | TM-I 18 NEUTRAL GE | 320 | **1718431687** |
| Transparent sleeves, 12-mm length | TM 4/12 HF/HB | 500 | **1719840000** | TM 4/12 HF/HB | 500 | **1719840000** |
| Transparent sleeves, 18-mm length | TM 4/18 HF/HB | 500 | **1719850000** | TM 4/18 HF/HB | 500 | **1719850000** |

**Note**

## Assembled cable - M12 dragline cable, angled

- Cat.5
- PUR
- D-coded
- PROFINET type C

## M12 / open

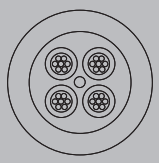

## Technical data

| | |
|---|---|
| Product type | Dragline cable |
| Category | Cat.5 (ISO/IEC 11801) / Cat.5e (TIA T568-B) |
| Shielding | SF/UTP |
| Version connector left / Version connector right | M12 IP 67 angled male / Open |
| Cross-section | 4*AWG 22/7 - 0.36 mm² |
| Sheath diameter, max. | 6.7 mm |
| Material sheath | PUR |
| Sheathing colour | green (RAL 6018) |
| Insulation cross-section | 1.5 mm |
| Min. bending radius, repetitive | 7.5 *diameter |
| Ambient temperature (operational) | -40 °C...+70 °C |
| Installation temperature | -20 °C...+60 °C |
| Storage temperature | -50 °C...+70 °C |
| Abrasion resistance | very good |
| Halogen | in accordance with IEC 60754-2 |
| Resistance to oils | in according with IEC 60811-2-1 |
| Fire safety for railway vehicles | |

**Note**

## Ordering data

| | Type | QTY | Order No. |
|---|---|---|---|
| **Cat.5 PROFINET, PUR, M12 straight-M12 angled** | | | |
| 1,5 m | | | |
| 3,0 m | | | |
| 5,0 m | | | |
| 10,0 m | | | |
| **Cat.5 PROFINET, PUR, M12 angled-M12 angled** | | | |
| 1,5 m | | | |
| 3,0 m | | | |
| 5,0 m | | | |
| 10,0 m | | | |
| **Cat.5, PUR, M12 angled-open** | | | |
| 1,5 m | IE-C5DD4UG0015MCAXXX-X | 1 | **1059750015** |
| 3,0 m | IE-C5DD4UG0030MCAXXX-X | 1 | **1059750030** |
| 5,0 m | IE-C5DD4UG0050MCAXXX-X | 1 | **1059750050** |
| 10,0 m | IE-C5DD4UG0100MCAXXX-X | 1 | **1059750100** |

**Note**

## Accessories

| Markers | Type | QTY | Order No. |
|---|---|---|---|
| Insertion label, yellow, 12 mm | TM-I 12 NEUTRAL GE | 320 | **1718411687** |
| Insertion label, yellow, 18 mm | TM-I 18 NEUTRAL GE | 320 | **1718431687** |
| Transparent sleeves, 12-mm length | TM 4/12 HF/HB | 500 | **1719840000** |
| Transparent sleeves, 18-mm length | TM 4/18 HF/HB | 500 | **1719850000** |

**Note**

## Assembled cable - railway cable M12

- Cat.5
- Radox
- D-coded

### M12 / M12

| M12 | | M12 |
|---|---|---|
| 1 | yellow | 1 |
| 2 | white | 2 |
| 3 | orange | 3 |
| 4 | blue | 4 |

### M12 / M12

| M12 | | M12 |
|---|---|---|
| 1 | yellow | 1 |
| 2 | white | 2 |
| 3 | orange | 3 |
| 4 | blue | 4 |

## Technical data

| | | |
|---|---|---|
| Product type | System cable | System cable |
| Category | Cat.5 (ISO/IEC 11801) / Cat.5e (TIA T568-B) | Cat.5 (ISO/IEC 11801) / Cat.5e (TIA T568-B) |
| Shielding | SF/UTP | SF/UTP |
| Version connector left / Version connector right | M12 IP 67 straight male / M12 IP 67 straight male | M12 IP 67 straight male / M12 IP 67 straight socket |
| Cross-section | 2*2*AWG 22/7 - 2*2*0.36 mm² | 2*2*AWG 22/7 - 2*2*0.36 mm² |
| Sheath diameter, max. | 7.55 mm | 7.55 mm |
| Material sheath | Radox GKW S | Radox GKW S |
| Sheathing colour | Black | Black |
| Insulation cross-section | 1.95 mm | 1.95 mm |
| Min. bending radius, repetitive | 6 *diameter | 6 *diameter |
| Ambient temperature (operational) | -40 °C...+90 °C | -40 °C...+90 °C |
| Installation temperature | -25 °C...+90 °C | -25 °C...+90 °C |
| Storage temperature | -40 °C...+90 °C | -40 °C...+90 °C |
| Abrasion resistance | very good | very good |
| Halogen | in accordance with IEC 60754-2 | in accordance with IEC 60754-2 |
| Resistance to oils | in accordance with EN 50306-3 | in accordance with EN 50306-3 |
| Fire safety for railway vehicles | According to DIN 5510-2 fire safety levels 1,2,3,4, According to BS 6853, According to EN50288-2-2 | According to DIN 5510-2 fire safety levels 1,2,3,4, According to BS 6853, According to EN50288-2-2 |
| **Note** | | |

## Ordering data

| | Type | QTY | Order No. | Type | QTY | Order No. |
|---|---|---|---|---|---|---|
| 1,5 m | IE-C5DB4RE0015MCSMCS-E | 1 | **1010850015** | IE-C5DB4RE0015MSSMCS-E | 1 | **1059340015** |
| 3 m | IE-C5DB4RE0030MCSMCS-E | 1 | **1010850030** | IE-C5DB4RE0030MSSMCS-E | 1 | **1059340030** |
| 5 m | IE-C5DB4RE0050MCSMCS-E | 1 | **1010850050** | IE-C5DB4RE0050MSSMCS-E | 1 | **1059340050** |
| 10 m | IE-C5DB4RE0100MCSMCS-E | 1 | **1010850100** | IE-C5DB4RE0100MSSMCS-E | 1 | **1059340100** |

**Note**

## Accessories

| **Sheathing stripper** | Type | QTY | Order No. | Type | QTY | Order No. |
|---|---|---|---|---|---|---|
| For UTP and STP data cables | AM 12 | 1 | **9030060000** | AM 12 | 1 | **9030060000** |
| For coaxial and round data cables | IE-CST | 1 | **9204350000** | IE-CST | 1 | **9204350000** |
| **Markers** | | | | | | |
| Insertion label, yellow, 12 mm | TM-I 12 NEUTRAL GE | 320 | **1718411687** | TM-I 12 NEUTRAL GE | 320 | **1718411687** |
| Insertion label, yellow, 18 mm | TM-I 18 NEUTRAL GE | 320 | **1718431687** | TM-I 18 NEUTRAL GE | 320 | **1718431687** |
| Transparent sleeves, 12-mm length | TM 4/12 HF/HB | 500 | **1719840000** | TM 4/12 HF/HB | 500 | **1719840000** |
| Transparent sleeves, 18-mm length | TM 4/18 HF/HB | 500 | **1719850000** | TM 4/18 HF/HB | 500 | **1719850000** |
| Wire and cable marker, ø 4,7 - 7,4 mm | VT SF 5/21 NEUTRAL WS V0 | 160 | **1689470001** | VT SF 5/21 NEUTRAL WS V0 | 160 | **1689470001** |
| Wire and cable marker, ø 5,8 - 7,8 mm | VT SF 6/21 NEUTRAL WS V0 | 160 | **1730560001** | VT SF 6/21 NEUTRAL WS V0 | 160 | **1730560001** |

**Note**

## Assembled cable - railway cable M12

- Cat.5
- Radox
- D-coded

## M12 / open

| | M12 |
|---|---|
| yellow | 1 |
| white | 2 |
| orange | 3 |
| blue | 4 |

## Technical data

| | |
|---|---|
| Product type | System cable |
| Category | Cat.5 (ISO/IEC 11801) / Cat.5e (TIA T568-B) |
| Shielding | SF/UTP |
| Version connector left / Version connector right | M12 IP 67 straight male / Open |
| Cross-section | 2*2*AWG 22/7 - 2*2*0.36 mm² |
| Sheath diameter, max. | 7.55 mm |
| Material sheath | Radox GKW S |
| Sheathing colour | Black |
| Insulation cross-section | 1.95 mm |
| Min. bending radius, repetitive | 6 *diameter |
| Ambient temperature (operational) | -40 °C...+90 °C |
| Installation temperature | -25 °C...+90 °C |
| Storage temperature | -40 °C...+90 °C |
| Abrasion resistance | very good |
| Halogen | in accordance with IEC 60754-2 |
| Resistance to oils | in accordance with EN 50306-3 |
| Fire safety for railway vehicles | According to DIN 5510-2 fire safety levels 1,2,3,4, According to BS 6853, According to EN50288-2-2 |

**Note**

## Ordering data

| | Type | QTY | Order No. |
|---|---|---|---|
| 1,5 m | IE-C5DB4RE0015MCSXXX-X | 1 | 1010840015 |
| 3 m | IE-C5DB4RE0030MCSXXX-X | 1 | 1010840030 |
| 5 m | IE-C5DB4RE0050MCSXXX-X | 1 | 1010840050 |
| 10 m | IE-C5DB4RE0100MCSXXX-X | 1 | 1010840100 |

**Note**

## Accessories

| Sheathing stripper | Type | QTY | Order No. |
|---|---|---|---|
| For UTP and STP data cables | AM 12 | 1 | 9030060000 |
| For coaxial and round data cables | IE-CST | 1 | 9204350000 |
| **Markers** | | | |
| Insertion label, yellow, 12 mm | TM-I 12 NEUTRAL GE | 320 | 1718411687 |
| Insertion label, yellow, 18 mm | TM-I 18 NEUTRAL GE | 320 | 1718431687 |
| Transparent sleeves, 12-mm length | TM 4/12 HF/HB | 500 | 1719840000 |
| Transparent sleeves, 18-mm length | TM 4/18 HF/HB | 500 | 1719850000 |
| Wire and cable marker, ø 4,7 - 7,4 mm | VT SF 5/21 NEUTRAL WS V0 | 160 | 1689470001 |
| Wire and cable marker, ø 5,8 - 7,8 mm | VT SF 6/21 NEUTRAL WS V0 | 160 | 1730560001 |

**Note**

## Assembled cable - railway cable M12

- Cat.5
- Radox
- D-coded

### M12 / M12

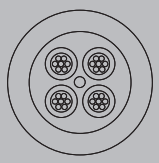

### M12 / M12

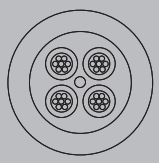

## Technical data

| | | |
|---|---|---|
| Product type | System cable | System cable |
| Category | Cat.5 (ISO/IEC 11801) / Cat.5e (TIA T568-B) | Cat.5 (ISO/IEC 11801) / Cat.5e (TIA T568-B) |
| Shielding | SF/UTP | SF/UTP |
| Version connector left / Version connector right | M12 IP 67 straight male / M12 IP 67 angled male | M12 IP 67 angled male / M12 IP 67 angled male |
| Cross-section | 2*2*AWG 22/7 - 2*2*0.36 mm² | 2*2*AWG 22/7 - 2*2*0.36 mm² |
| Sheath diameter, max. | 7.55 mm | 7.55 mm |
| Material sheath | Radox GKW S | Radox GKW S |
| Sheathing colour | Black | Black |
| Insulation cross-section | 1.95 mm | 1.95 mm |
| Min. bending radius, repetitive | 6 *diameter | 6 *diameter |
| Ambient temperature (operational) | -40 °C...+90 °C | -40 °C...+90 °C |
| Installation temperature | -25 °C...+90 °C | -25 °C...+90 °C |
| Storage temperature | -40 °C...+90 °C | -40 °C...+90 °C |
| Abrasion resistance | very good | very good |
| Halogen | in accordance with IEC 60754-2 | in accordance with IEC 60754-2 |
| Resistance to oils | in accordance with EN 50306-3 | in accordance with EN 50306-3 |
| Fire safety for railway vehicles | According to DIN 5510-2 fire safety levels 1,2,3,4, According to BS 6853, According to EN50288-2-2 | According to DIN 5510-2 fire safety levels 1,2,3,4, According to BS 6853, According to EN50288-2-2 |
| **Note** | | |

## Ordering data

| | Type | QTY | Order No. | Type | QTY | Order No. |
|---|---|---|---|---|---|---|
| 1,5 m | IE-C5DB4RE0015MCSMCA-E | 1 | **1059940015** | IE-C5DB4RE0015MCAMCA-E | 1 | **1059970015** |
| 3 m | IE-C5DB4RE0030MCSMCA-E | 1 | **1059940030** | IE-C5DB4RE0030MCAMCA-E | 1 | **1059970030** |
| 5 m | IE-C5DB4RE0050MCSMCA-E | 1 | **1059940050** | IE-C5DB4RE0050MCAMCA-E | 1 | **1059970050** |
| 10 m | IE-C5DB4RE0100MCSMCA-E | 1 | **1059940100** | IE-C5DB4RE0100MCAMCA-E | 1 | **1059970100** |

**Note**

## Accessories

| Markers | Type | QTY | Order No. | Type | QTY | Order No. |
|---|---|---|---|---|---|---|
| Insertion label, yellow, 12 mm | TM-I 12 NEUTRAL GE | 320 | **1718411687** | TM-I 12 NEUTRAL GE | 320 | **1718411687** |
| Insertion label, yellow, 18 mm | TM-I 18 NEUTRAL GE | 320 | **1718431687** | TM-I 18 NEUTRAL GE | 320 | **1718431687** |
| Transparent sleeves, 12-mm length | TM 4/12 HF/HB | 500 | **1719840000** | TM 4/12 HF/HB | 500 | **1719840000** |
| Transparent sleeves, 18-mm length | TM 4/18 HF/HB | 500 | **1719850000** | TM 4/18 HF/HB | 500 | **1719850000** |

**Note**

## Assembled cable - railway cable M12

- Cat.5
- Radox
- D-coded

## M12 / open

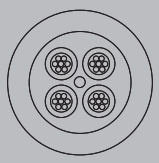

## Technical data

| | |
|---|---|
| Product type | System cable |
| Category | Cat.5 (ISO/IEC 11801) / Cat.5e (TIA T568-B) |
| Shielding | SF/UTP |
| Version connector left / Version connector right | M12 IP 67 angled male / Open |
| Cross-section | 2*2*AWG 22/7 - 2*2*0.36 mm² |
| Sheath diameter, max. | 7.55 mm |
| Material sheath | Radox GKW S |
| Sheathing colour | Black |
| Insulation cross-section | 1.95 mm |
| Min. bending radius, repetitive | 6 *diameter |
| Ambient temperature (operational) | -40 °C...+90 °C |
| Installation temperature | -25 °C...+90 °C |
| Storage temperature | -40 °C...+90 °C |
| Abrasion resistance | very good |
| Halogen | in accordance with IEC 60754-2 |
| Resistance to oils | in accordance with EN 50306-3 |
| Fire safety for railway vehicles | According to DIN 5510-2 fire safety levels 1,2,3,4, According to BS 6853, According to EN50288-2-2 |

**Note**

## Ordering data

| | Type | QTY | Order No. |
|---|---|---|---|
| 1,5 m | IE-C5DB4RE0015MCAXXX-X | 1 | 1059900015 |
| 3 m | IE-C5DB4RE0030MCAXXX-X | 1 | 1059900030 |
| 5 m | IE-C5DB4RE0050MCAXXX-X | 1 | 1059900050 |
| 10 m | IE-C5DB4RE0100MCAXXX-X | 1 | 1059900100 |

**Note**

## Accessories

| Markers | Type | QTY | Order No. |
|---|---|---|---|
| Insertion label, yellow, 12 mm | TM-I 12 NEUTRAL GE | 320 | 1718411687 |
| Insertion label, yellow, 18 mm | TM-I 18 NEUTRAL GE | 320 | 1718431687 |
| Transparent sleeves, 12-mm length | TM 4/12 HF/HB | 500 | 1719840000 |
| Transparent sleeves, 18-mm length | TM 4/18 HF/HB | 500 | 1719850000 |

**Note**

**Screw connection M12, metal (EMC)**
**D-coded**

# Industrial Ethernet

## SAISM / SAIBM

**straight**

## SAISW

**angled**

## Ordering data

| Male | | Type | Qty. | Order No. | Type | Qty. | Order No. |
|---|---|---|---|---|---|---|---|
| | 4-pole. PG 9 | SAISM-4/8S-M12-4P D-COD | 1 | 1892120000 | SAISW-4/8S-M12-4P D-COD | 1 | 1160550000 |
| **Socket** | | | | | | | |
| | 4-pole. PG 9 | SAIBM-4/8S-M12-4P D-COD | 1 | 1892130000 | | | |
| **Note** | | | | | | | |

## Technical data

| | | |
|---|---|---|
| Type of connection | Screw connection | Screw connection |
| Housing main material | CuZn | CuZn |
| Contact tube diameter | M12 | M12 |
| Cable diameter | 6...8 mm (PG9) | 6...8 mm (PG9) |
| Wire cross-section, min. / max. | 0.25...0.75 mm² | 0.14...0.75 mm² |
| Rated current | 4 A | 4 A |
| Rated voltage | 250 V | 250 V |
| Temperature range of housing | -25...+85 °C | -25...+85 °C |
| Protection degree | IP 67 | IP 67 |
| Contact surface | Gold-plated | Gold-plated |
| **Note** | Torque, see E.12 | Torque, see E.12 |

Torque, see E.12

## Dimensioned drawing

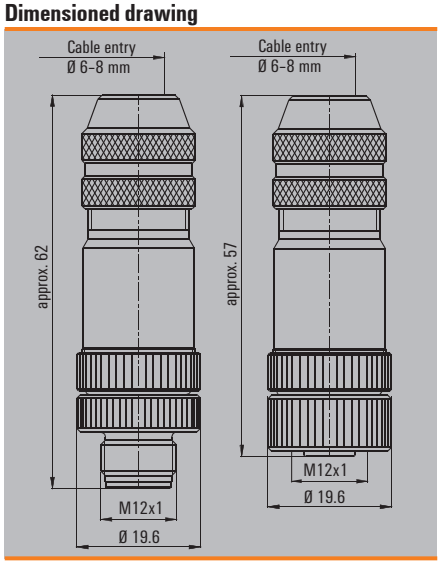


## Dimensioned drawing

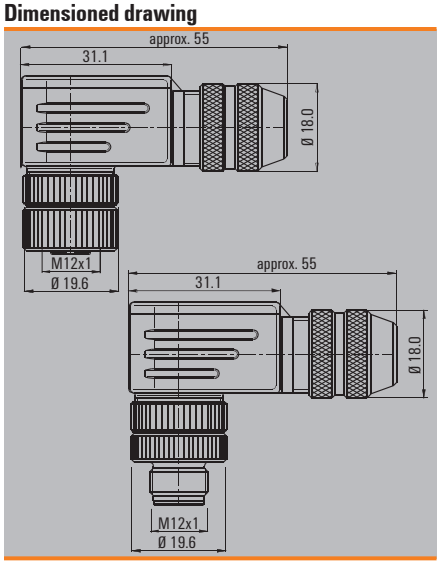

## M12 tension-clamp connection, stainless steel D-coded

## SAIS / SAIB VA

# Industrial Ethernet

## Ordering data

| Male | |
|---|---|
| Tension-clamp connection. straight. stainless steel | 5-pole. PG 9 |
| **Note** | |

| Type | Qty. | Order No. |
|---|---|---|
| SAIS 5/9-VA D-COD | 1 | 1920700001 |

## Technical data

| | |
|---|---|
| Type of connection | Tension clamp connection |
| Housing main material | 1.4404/316L |
| Contact tube diameter | M12 |
| Cable diameter | 6...8 mm (PG9) |
| Wire cross-section, min. / max. | 0.25...0.5 mm² |
| Rated current | 4 A |
| Rated voltage | 125 V |
| Temperature range of housing | -25...+85 °C |
| Protection degree | IP 69K |
| Contact surface | Gold-plated |
| **Note** | Torque, see E.12 |

## Dimensioned drawing

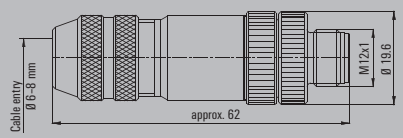


Torque, see E.12

## M12 connector / PCB socket
## M12 X-type cat. $6_A$

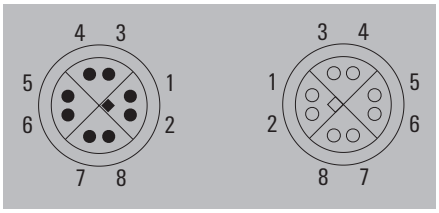


## Plug

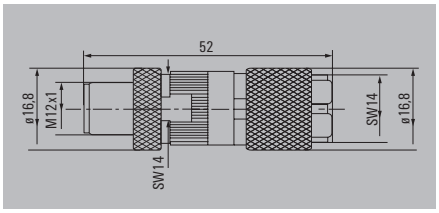


## PCB socket

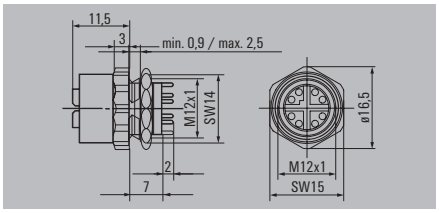


## Technical data

| | | |
|---|---|---|
| Category | Cat.$6_A$ / Class $E_A$ (ISO/IEC 11801 2010) | Cat.$6_A$ / Class $E_A$ (ISO/IEC 11801 2010) |
| Protection degree | IP 65, IP 67 | IP 67 (when screwed in) |
| Connection 1 | M12 | M12 |
| Housing main material | Zinc diecast | CuZn |
| Contact holder materials | PA | |
| Contact tube diameter | M12 | M12 |
| Contact material / Contact surface | CuZn / Gold-plated | |
| Ambient temperature (operational) | -25 / +85 °C | -25 / +85 °C |
| Connector standard | IEC 61076-2-109 | IEC 61076-2-109 |
| Current-carrying capacity at 50 °C | 0.5 A @ 40 °C | 0.5 A @ 40 °C |
| Rated voltage | 48 V | 48 V |
| Insulation resistance | 100 MΩ | 100 MΩ |
| Plugging cycles | ≥ 100 | ≥ 100 |
| Configuration | | Reflow compatible |
| Shielding | 360° all-round enclosure | 360° all-round enclosure |
| Conductor diamter, finely stranded min./max. | 0.48 / 0.76 mm | / mm |
| Wire cross-section, finely stranded, min. (AWG) | AWG 26 / AWG 22 | |
| Conductor diameter, solid min./max. | 0.4 / 0.64 mm | / mm |
| Wire cross-section, solid, min. (AWG) | AWG 24 / AWG 22 | |
| Insulation cross-section, max. | 1.6 mm | |
| Sheath diameter, min. / Sheath diameter, max. | 5 / 9.7 mm | / mm |
| **Note** | | |

## Ordering data

| | Type | QTY | Order No. | Type | QTY | Order No. |
|---|---|---|---|---|---|---|
| pre-assembled | IE-PS-M12X-P-FH | 10 | **1324020000** | IE-PCB-M12X-S-180 | 10 | **1324010000** |
| 2-piece design | | | | IE-PCB2-M12X-S-180 | 10 | **1393080000** |

**Note**

## Accessories

**Note**

# FOUNDATION Fieldbus - connector (7/8")

## Plug-in connector FBCon 7/8"

### Plug-in connector straight (plug)

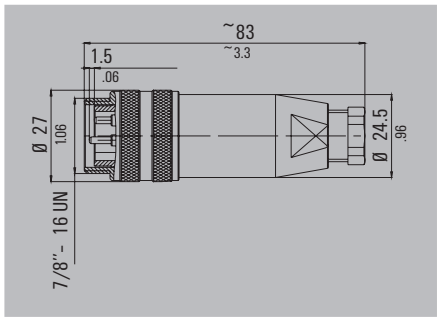


**Ordering data** — **4-pole**

| Type | Qty. | Order No. |
|---|---|---|
| FBCon 7/8 ˝ 4P M | 1 | **1808840000** |

### Plug-in connector 90° (plug)

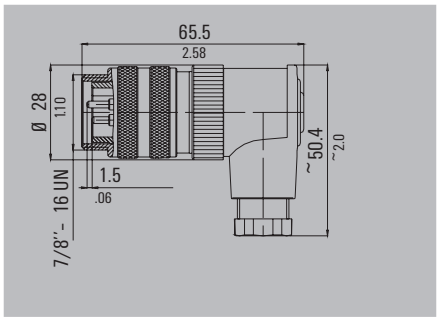


**Ordering data** — **4-pole**

| Type | Qty. | Order No. |
|---|---|---|
| FBCon 7/8 ˝ 4P M (A) | 1 | **1808830000** |

### Technical data

| | |
|---|---|
| No. of poles | 4 |
| Lock | Screw 7/8" UNF |
| Cable gland | PG 9 |
| Connection | Screw |
| Connection cross-section | max. 1,5 mm² |
| Connection cross-section | 16 AWG |
| Enclosure protection class | IP 67 |
| Mechanical service life | > 500 plugging cycles |
| Upper limit temperature | + 85 °C |
| Lower limit temperature | - 40 °C |

| Electrical data | |
|---|---|
| Rated voltage | 250 V |
| Rated surge voltage | 4000 V |
| Polution severity | 3 |
| Surge category | II |
| Insulation material group | III |
| Test surge voltage | 4800 V |
| Rated current | 9 A (40°) |
| Volume resistivity | ≤ 5 mΩ |
| Insulation resistance | > $10^{10}$Ω |

| Materials | | |
|---|---|---|
| Contact pins | CuZn | (brass) |
| Contact surface | Au | (gold) |
| Socket body | PUR/PA | (UL 94 HB) |
| Enclosure cable plug | PBT | (UL 94 V-0) |
| Threaded ring | Anodised aluminium | |

### Plug-in connector straight (socket)

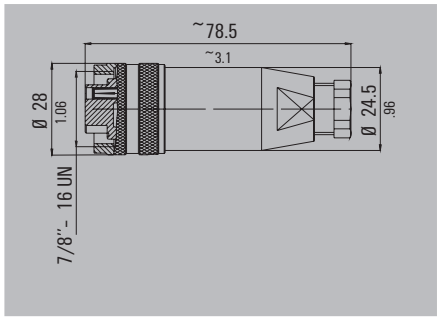


**Ordering data** — **4-pole**

| Type | Qty. | Order No. |
|---|---|---|
| FBCon 7/8 ˝ 4P FM | 1 | **1812480000** |

**Note:** refer also to chapter 7/8"

### Plug-in connector 90° (socket)

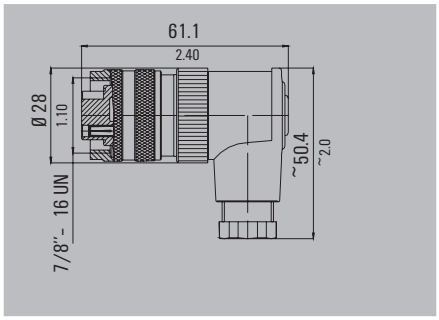


**Ordering data** — **4-pole**

| Type | Qty. | Order No. |
|---|---|---|
| FBCon 7/8 ˝ 4P FM (A) | 1 | **1812470000** |

## Accessories for fieldbus distributors

### Cable glands – plastic – IP 68

**Ordering data**

| Type | Qty. | Order No. |
|---|---|---|
| VG M16-1/K68 | 50 | 1909860000 |

### Cable glands – brass – IP 68

**Ordering data**

| Type | Qty. | Order No. |
|---|---|---|
| VG M16-1/MS68 | 50 | 1909910000 |

### Cable glands – brass – 1/EMC

**Ordering data**

| Type | Qty. | Order No. |
|---|---|---|
| VG M16-MS 1/EMV | 50 | 1909500000 |

### Cable glands – brass – EEx e, IP 68

**Ordering data**

| Type | Qty. | Order No. |
|---|---|---|
| VG M16-EXE MS | 50 | 1737210000 |

### Sealing rings – 9005

**Ordering data**

| Type | Qty. | Order No. |
|---|---|---|
| GWDR M16-NP | 50 | 1736230000 |

### Blanking plugs – brass

**Ordering data**

| Type | Qty. | Order No. |
|---|---|---|
| VP M16-MS65 | 100 | 1777730000 |

### Blanking plugs – plastic – EEx e

**Ordering data**

| Type | Qty. | Order No. |
|---|---|---|
| VG M16-EXE SW | 50 | 1737070000 |

### Pressure compensation element – plastic – DAE

**Ordering data**

| Type | Qty. | Order No. |
|---|---|---|
| DAE M12 PA short | 10 | 1868560000 |

For technical data, refer to Catalogue 5 – Enclosures and Cable Glands

# M8, M12 Plug in connectors and protective caps


| | | |
|---|---|---|
| **M8, M12 Plug in connectors and protective caps** | SAI connectors | D.2 |
| | Customisable connectors | D.4 |
| | Connectors – accessories | D.28 |
| | Built-in plugs | D.32 |
| | Valve plugs for custom assembly | D.40 |
| | Protective sleeve adapter | D.42 |

# SAI connectors

Self assembled M8 and M12 connectors are integral and essential connectivity components. They are available with a wide variety of different wire connection methods. Weidmüller offers all of the secure connection methods, which include screw, tension clamp, IDC or solder connection mechanisms.
One highlight in this line is the shielded, D-coded M-12 connectors. They are available in male and female versions and with tension clamp connection.
The eight pole screw connection connectors are a special favourite. These are available in shielded or unshielded versions.

## Fast

The M12 connectors can also come with the tension clamp conductor connection method, either shielded or unshielded.

## Versatile

Eight-pole M12 connectors, shielded, with screw connection and a cable outer insulation diameter of 8 – 10 mm.

## Proven

M8 connectors with screw connections for the conductor are much easier to assemble compared to connectors which require soldering.

## Safe

M8 connectors with shield connections are in increasing demand as the trend towards miniaturisation continues.

**M12 connectors**
Screw and tension clamp connection

**M8 connectors**
Screw and solder connection

**M8 and M12 connectors**
Insulation displacement connection (IDC)

**M8 and M12 connectors**
T distributor

**Protective caps for SAI distributors**

**M12/M8/M5**
Built in connectors

**Customisable valve connectors**

# Overview of M8 and M12 screw connections

**M8**

**M12**

**M12 Metal**

Plugs and sockets (screw connection) for custom assembly to make up M8 and M12 connections.

Machine builders frequently need individual cable lengths. To meet this demand, Weidmüller can supply M8 and M12 plug in connectors for custom assembly.

The plug in connectors are available with different cable gland diameters. In the 90° versions, the outgoing direction of the cable can be changed in 90° steps. The connected plug in connectors comply with IP 67 ingress protection classification. There are also plug in connectors available for double assignment of distributors.

**Screwty®**

This is the perfect tool for all common cable glands on sensor and actuator cables.

The Screwty® fits M12 and M8 round plugs. Both types can be used for the plugs and sockets on custom cables.

The handle of every Screwty® has a conventional 1/4 inch fitting and can be used for all sizes. Simply turn the tool to tighten or release a round plug.

The Screwty® is also available with a torque fitting. This adjustable attachment can be used for all sizes. The torque can be infinitely adjusted between 0.5 and 1.7 Nm.

**IDC-Tool**

Weidmüller offers various products with insulation displacement connection for M12 connectors. These include the IDC connection elements, which can be directly screwed to a distributor, such as part nos. 9457720000 and 1766810000.
In addition, there are two M12 IDC adapters with part nos. 1781550001 and 1781540001. All four elements can be fitted by hand with no additional tools. When there are many connections to be made in a day, however, use of the copyright protected IDC tool is recommended. This tool works like a knurled screw on the terminal.

# Overview of SAI connector M12

## Plastic

| Screw connection | straight | | | angled | | |
|---|---|---|---|---|---|---|
| | 3-pole | 4-pole | 5-pole | 3-pole | 4-pole | 5-pole |
| PG7 Male | 1021470000 | 9457550000 | 9456940000 | 1021280000 | 9457290000 | 9456950000 |
| PG7 Female | 1021490000 | 9457240000 | 9457250000 | 1021310000 | 9457700000 | 9457260000 |
| **Screw connection** | | | | | | |
| PG9 Male | 1021480000 | 1807340000 | 1807350000 | 1021280000 | 1807360000 | 1807370000 |
| PG9 Female | 1021510000 | 1807230000 | 1807250000 | 1021310000 | 1807240000 | 1807330000 |
| **Screw connection** | 8-pole | 12-pole (Solder connection) | | | | |
| PG 9 Male | 1836970000 | 1924950000 | | | | |
| PG9 Female | 1836960000 | 1924960000 | | | | |
| **IDC connection** | (0.14 - 0.34 mm²) 4-pole | (0.34 - 0.75 mm²) 4-pole | | | | |
| Male | 1781550001 | 1852740000 | | | | |
| Female | 1781540001 | 1852730000 | | | | |
| **Tension clamp connection** | | | 5-pole | | | |
| Male | | | 1906390000 | | | |
| Female | | | 1924970000 | | | |

## Metal

| A-coded | straight | | | angled | | |
|---|---|---|---|---|---|---|
| Screw connection | 3-pole | 4-pole | 5-pole | 3-pole | 4-pole | 5-pole |
| PG7 Male | | | 1191030000 | | | |
| PG7 Female | | | 1191020000 | | | |
| | | | | | | |
| PG9 Male | | 9455640000 | 1784740000 | | 1803930000 | 1803940000 |
| PG9 Female | | 8426220000 | 1784750000 | | 1803910000 | 1803920000 |
| **Tension clamp connection** | | | | | | |
| PG9 Male | | | | | | |
| PG9 Female | | 1784740002 | | | | 1275750000 |
| **B-coded Screw connection** | | | | | | |
| PG9 Male | | | 1784790000 | | | 1944570000 |
| PG9 Female | | | 1784780000 | | | 1944580000 |
| **D-coded Screw connection** | | | | | | |
| PG9 Male | | 1892120000 | | | | |
| PG9 Female | | 1892130000 | | | | |
| **D-coded Screw connection** | | | | | | |
| PG9 Male | | 1892120001 | | | 1803930001 | |
| PG9 Female | | 1892130001 | | | 1139330000 | |

# Overview of M8 connectors

## Plastic

| Screw connection | straight | | | angled | | |
|---|---|---|---|---|---|---|
| | 3-pole | 4-pole | 5-pole | 3-pole | 4-pole | 5-pole |
| Male screw connection | 1803860000 | 1803850000 | | | | |
| Female screw connection | 1803870000 | 1803880000 | | | | |
| | | | | | | |
| Male IDC connection | 1784040001 | 1784060001 | | | | |
| Female IDC connection | 1784030001 | 1784050001 | | | | |
| | | | | | | |
| Male solder connection | | | | 1920990000 | 1921000000 | |
| Female solder connection | | | | 1920970000 | 1920980000 | |
| | | | | | | |

## Metal

| | straight | | | angled | | |
|---|---|---|---|---|---|---|
| | 3-pole | 4-pole | 5-pole | 3-pole | 4-pole | 5-pole |
| Male screw connection | 1010060000 | 1010070000 | | | | |
| Female screw connection | 1010080000 | 1010090000 | | | | |
| | | | | | | |
| Male solder connection | 1921030000 | 1921040000 | | | | |
| Female solder connection | 1921010000 | 1921020000 | | | | |
| | | | | | | |

## Screw connection M12, A-coded

### SAIS / SAIB

**straight**

### SAISW / SAIBW

**Angled**

## Ordering data

| Male | Type | Qty. | Order No. | Type | Qty. | Order No. |
|---|---|---|---|---|---|---|
| 3-pole. PG 7 | SAIS-3/7 | 1 | 1021470000 | SAISW-3/7 | 1 | 1021280000 |
| 3-pole. PG 9 | SAIS-3/9 | 1 | 1021480000 | SAISW-3/9 | 1 | 1021290000 |
| 4-pole. PG 7 | SAIS-4/7 | 1 | 9457550000 | SAISW-4/7 | 1 | 9457290000 |
| 4-pole. PG 9 | SAIS-4/9 | 1 | 1807340000 | SAISW-4/9 | 1 | 1807360000 |
| **Socket** | | | | | | |
| 3-pole. PG 7 | SAIB-3/7 | 1 | 1021490000 | SAIBW-3/7 | 1 | 1021310000 |
| 3-pole. PG 9 | SAIB-3/9 | 1 | 1021510000 | SAIBW-3/9 | 1 | 1021320000 |
| 4-pole. PG 7 | SAIB-4/7 | 1 | 9457240000 | SAIBW-4/7 | 1 | 9457700000 |
| 4-pole. PG 9 | SAIB-4/9 | 1 | 1807230000 | SAIBW-4/9 | 1 | 1807240000 |
| **Note** | Other versions on request | | | Other versions on request | | |

## Technical data

| | | |
|---|---|---|
| Type of connection | Screw connection | Screw connection |
| Housing main material | PA | PA |
| Contact tube diameter | M12 | M12 |
| Cable diameter | 4...6 mm (PG7)/ 6...8 mm (PG9) | 4...6 mm (PG7)/ 6...8 mm (PG9) |
| Wire cross-section, min. / max. | 0.14...0.75 mm² | 0.14...0.75 mm² |
| Rated current | 4 A | 4 A |
| Rated voltage | 250 V | 250 V |
| Temperature range of housing | -25...+85 °C | -25...+85 °C |
| Protection degree | IP 67 | IP 67 |
| Contact surface | CuSnZn | CuSnZn |
| **Note** | Torque, see E.12 | Torque, see E.12 |

Torque, see E.12

## Dimensioned drawing

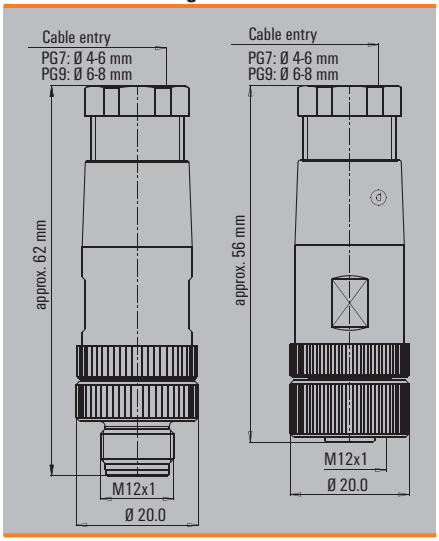


## Dimensioned drawing

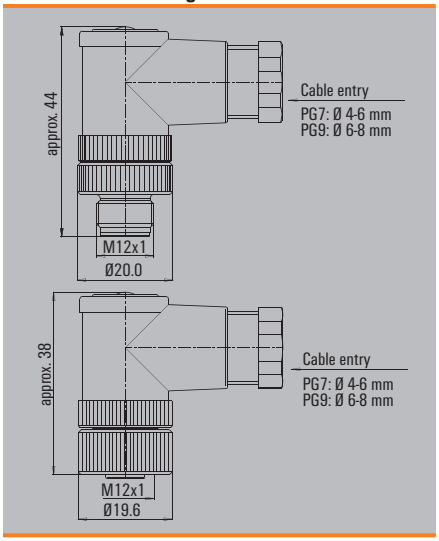

## Screw connection M12, A-coded

### SAIS / SAIB

**straight**

### SAISW / SAIBW

**Angled**

## Ordering data

| Male | | Type | Qty. | Order No. | Type | Qty. | Order No. |
|---|---|---|---|---|---|---|---|
| | 5-pole. PG 7 | SAIS-5/7 | 1 | **9456940000** | SAISW-5/7 | 1 | **9456950000** |
| | 5-pole. PG 9 | SAIS-5/9 | 1 | **1807350000** | SAISW- 5/9 | 1 | **1807370000** |
| | 8-pole. PG 9 | SAIS-8/9 | 1 | **1836970000** | | | |
| **Socket** | | | | | | | |
| | 5-pole. PG 7 | SAIB-5/7 | 1 | **9457250000** | SAIBW-5/7 | 1 | **9457260000** |
| | 5-pole. PG 9 | SAIB-5/9 | 1 | **1807250000** | SAIBW-5/9 | 1 | **1807330000** |
| | 8-pole. PG 9 | SAIB-8/9 | 1 | **1836960000** | | | |
| **Note** | | Other versions on request | | | Other versions on request | | |

## Technical data

| | | |
|---|---|---|
| Type of connection | Screw connection | Screw connection |
| Housing main material | PA | PA |
| Contact tube diameter | M12 | M12 |
| Cable diameter | 4...6 mm (PG7)/ 6...8 mm (PG9) | 4...6 mm (PG7)/ 6...8 mm (PG9) |
| Wire cross-section, min. / max. | 0.14...0.75 mm² | 0.14...0.75 mm² |
| Rated current | 4 A | 4 A |
| Rated voltage | 125 V (5-pole) / 60 V (8-pole) | 125 V |
| Temperature range of housing | -25...+85 °C | -25...+85 °C |
| Protection degree | IP 67 | IP 67 |
| Contact surface | CuSnZn | CuSnZn |
| **Note** | Torque, see E.12 | Torque, see E.12 |

Torque, see E.12

## Dimensioned drawing

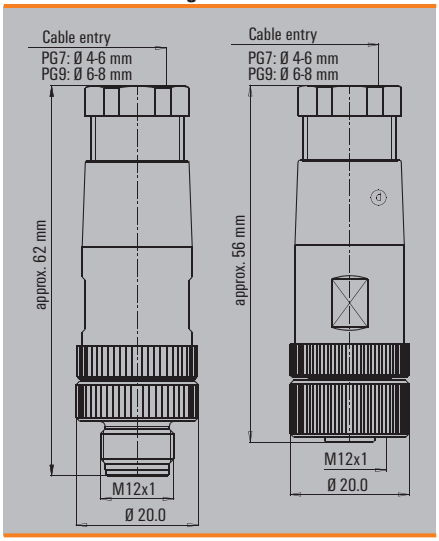


## Dimensioned drawing

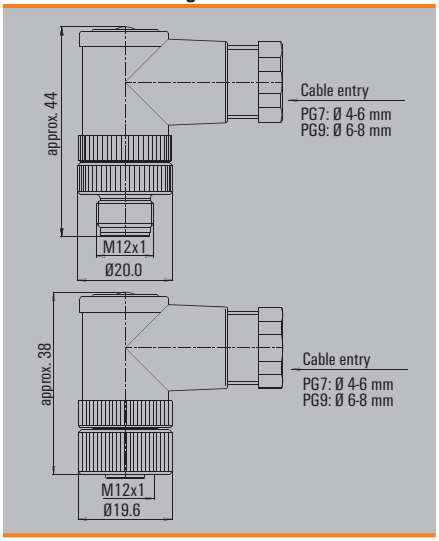

## Screw connection M12, A-coded

## SAIS / SAIB

### Ordering data

| Male | Type | Qty. | Order No. |
|---|---|---|---|
| 4-pole. PG 11 | SAIS-4/11-1.5 | 1 | 1353700000 |
| 5-pole. PG 11 | SAIS-5/11-1.5 | 1 | 1353740000 |
| **Socket** | | | |
| 4-pole. PG 11 | SAIB-4/11-1.5 | 1 | 1353730000 |
| 5-pole. PG 11 | SAIB-5/11-1.5 | 1 | 1353750000 |
| **Note** | | | |

### Technical data

| | |
|---|---|
| Type of connection | Screw connection |
| Housing main material | PA |
| Contact tube diameter | M12 |
| Cable diameter | 8...10 mm (PG11) |
| Wire cross-section, min. / max. | 0.14...1.5 mm² |
| Rated current | Contacts 1-4 8A, contact 5 2A |
| Rated voltage (acc. to VDE standard 0110 ISO group C) | 250 V |
| Temperature range of housing | -25...+85 °C |
| Protection degree | IP 67 |
| Contact surface | Gold-plated |
| **Note** | Torque, see E.12 |

### Dimensioned drawing

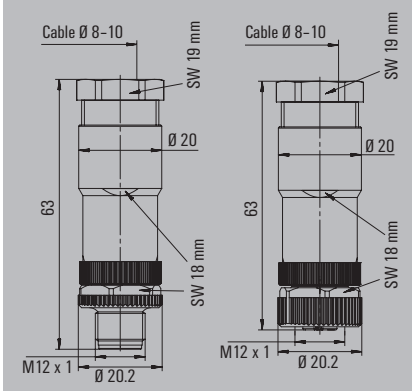


Torque, see E.12

## Screw connection M12, A-coded

### SAIS / SAIB

**straight**

### SAISW / SAIBW

**Angled**

## Ordering data

| Male | Type | Qty. | Order No. | Type | Qty. | Order No. |
|---|---|---|---|---|---|---|
| 4-pole. PG 7 | SAIS-4/7-(KV) | 1 | **1921060000** | SAISW-4/7-(KV) | 1 | **1962620000** |
| 5-pole. PG 7 | SAIS-5/7-(KV) | 1 | **1921050000** | SAISW-5/7-(KV) | 1 | **1962610000** |
| **Socket** | | | | | | |
| 4-pole. PG 7 | SAIB-4/7-(KV) | 1 | **1921080000** | SAIBW-4/7-(KV) | 1 | **1935610000** |
| 5-pole. PG 7 | SAIB-5/7-(KV) | 1 | **1921070000** | SAIBW-5/7-(KV) | 1 | **1962630000** |
| **Note** | Other versions on request | | | Other versions on request | | |

## Technical data

| | | |
|---|---|---|
| Type of connection | Screw connection | Screw connection |
| Housing main material | PA | PA |
| Contact tube diameter | M12 | M12 |
| Cable diameter | 4...6 mm (PG7)/ 6...8 mm (PG9) | 4...6 mm (PG7)/ 6...8 mm (PG9) |
| Wire cross-section, min. / max. | 0.14...0.75 mm² | 0.14...0.75 mm² |
| Rated current | 4 A | 4 A |
| Rated voltage | 250 V | 125 V |
| Temperature range of housing | -25...+85 °C | -25...+85 °C |
| Protection degree | IP 67 | IP 67 |
| Contact surface | CuSnZn | CuSnZn |
| **Note** | KV = plastic cable glandTorque, see E.12 | KV = plastic cable glandTorque, see E.12 |

KV = plastic cable glandTorque, see E.12

## Dimensioned drawing

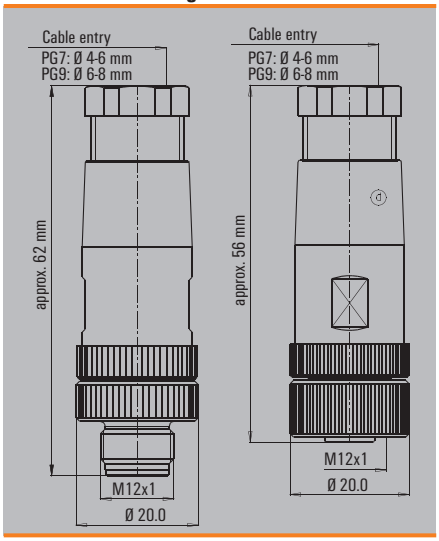


## Dimensioned drawing

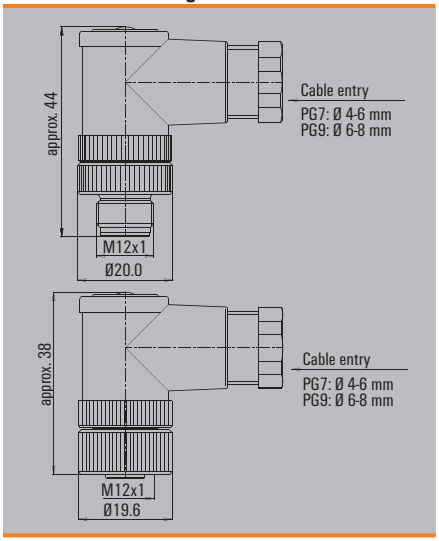

## Solder connection M12, A-coded

### SAIS / SAIB

**Straight**

### SAIBW

**Angled**

## Ordering data

| Male | | | |
|---|---|---|---|
| | 12-pole. PG 9 | | |
| **Socket** | | | |
| | 12-pole. PG 9 | | |
| **Note** | | | |

| Type | Qty. | Order No. |
|---|---|---|
| SAIS-12/9-(TL) | 1 | **1924950000** |
| | | |
| SAIB-12/9-(TL) | 1 | **1924960000** |

| Type | Qty. | Order No. |
|---|---|---|
| | | |
| | | |
| SAIBW-12/9-(TL) | 1 | **1925870000** |

## Technical data

| | | |
|---|---|---|
| Type of connection | Solder connection | Solder connection |
| Housing main material | PA | PA |
| Contact tube diameter | M12 | M12 |
| Cable diameter | 6...8 mm (PG9) | 6...8 mm (PG9) |
| Wire cross-section, min. / max. | 0.25...0.25 mm² | 0.25...0.25 mm² |
| Rated current | 1 A | 1 A |
| Rated voltage | 30 V | 30 V |
| Temperature range of housing | -25...+85 °C | -25...+85 °C |
| Protection degree | IP 67 | IP 67 |
| Contact surface | Gold-plated | Gold-plated |
| **Note** | Torque, see E.12 | Torque, see E.12 |

Torque, see E.12

## Dimensioned drawing

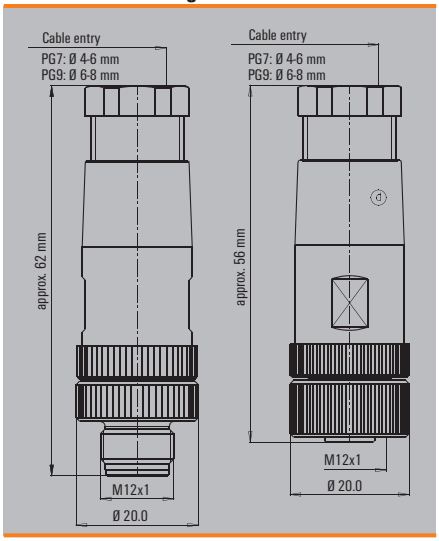


## Dimensioned drawing

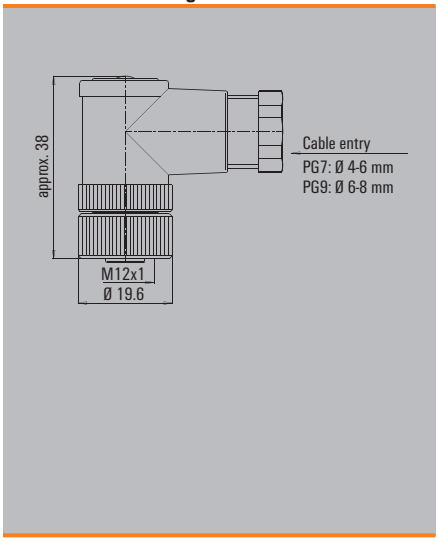

## M12 tension-clamp connection, stainless steel, shielded
## A-coded
## B-coded

## SAIS / SAIB VA

**straight**

### Ordering data

| Male | | Type | QTY | Order No. |
|---|---|---|---|---|
| | 5-pole. PG 9 | SAIS 5/9-VA | 1 | 1920700000 |
| | 5-pole. PG 9 | SAIS 5/9-VA-B-COD | 1 | 1920720000 |
| **Socket** | | | | |
| | 5-pole. PG 9 | SAIB 5/9-VA | 1 | 1920710000 |
| | 5-pole. PG 9 | SAIB 5/9-VA-B-COD | 1 | 1920730000 |
| **Note** | | | | |

### Technical data

| | |
|---|---|
| Type of connection | Tension clamp connection |
| Housing main material | 1.4404/316L |
| Contact tube diameter | M12 |
| Cable diameter | 6...8 mm (PG9) |
| Wire cross-section, min. / max. | 0.25...0.5 mm² |
| Rated current | 4 A |
| Rated voltage | 125 V |
| Temperature range of housing | -25...+85 °C |
| Protection degree | IP 69K |
| Contact surface | Gold-plated |
| **Note** | PB = PROFIBUS (B-COD)Torque, see E.12 |

### Dimensioned drawing

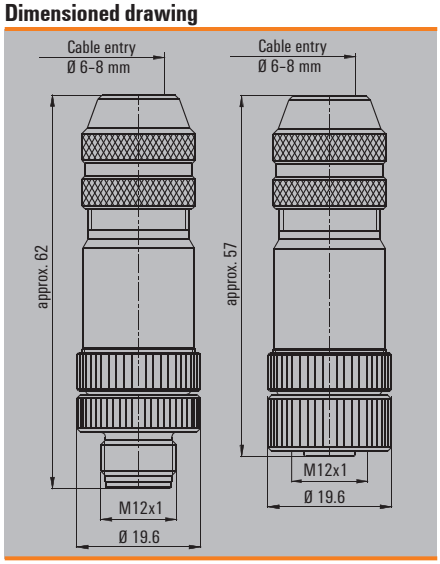


PB = PROFIBUS (B-COD)Torque, see E.12

## SAI M12 plug, shielded
## With shield connection

### SAISM / SAISB 8/11

**straight**

### Ordering data

| Male | | Type | Qty. | Order No. |
|---|---|---|---|---|
| | 8-pole. PG 9 | SAISM-8/9S-M12 | 1 | 1258940000 |
| | 8-pole. PG 11 | SAISM-8/11S-M12 | 1 | 1118910000 |
| **Socket** | | | | |
| | 8-pole. PG 9 | SAIBM-8/9S-M12 | 1 | 1258930000 |
| | 8-pole. PG 11 | SAIBM-8/11S-M12 | 1 | 1118920000 |
| **Note** | | | | |

### Technical data

| | |
|---|---|
| Type of connection | Screw connection |
| Housing main material | CuZn |
| Contact tube diameter | M12 |
| Cable diameter | 6...8 mm (PG9) / 8...10 mm (PG11) |
| Wire cross-section, min. / max. | 0.14...0.5 mm² |
| Rated current | 2 A |
| Rated voltage | 60 V |
| Temperature range of housing | -25...+85 °C |
| Protection degree | IP 67 |
| Contact surface | Gold-plated |
| **Note** | Torque, see E.12 |

### Dimensioned drawing

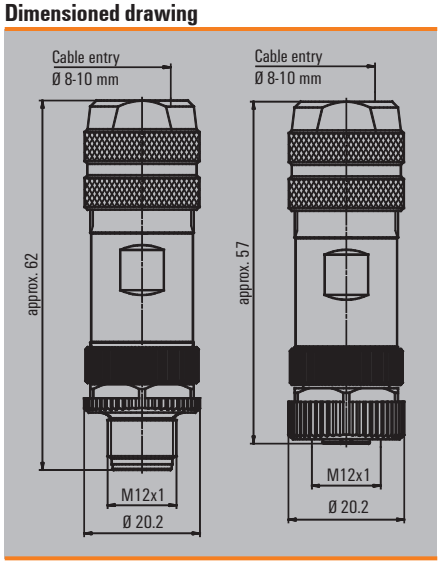


Torque, see E.12

## M12 screw connection, metal (shielded)
## A-coded

### FBCon / SAIS

**straight**

### SAISW / SAIBW

**Angled**

## Ordering data

| Male | | Type | Qty. | Order No. | Type | Qty. | Order No. |
|---|---|---|---|---|---|---|---|
| | 4-pole. PG 9 | FBCon M12 4P M EMC | 1 | **9455640000** | SAISW-M-4/8 M12 | 1 | **1803930000** |
| | 5-pole. PG 9 | SAIS-M-5/8S M12 5P A-COD | 1 | **1784740000** | SAISW-M-5/8 M12 | 1 | **1803940000** |
| **Socket** | | | | | | | |
| | 4-pole. PG 9 | FBCon M12 4P FM EMC | 1 | **8426220000** | SAIBW-M-4/8 M12 | 1 | **1803910000** |
| | 5-pole. PG 7 | SAIB-5/6S M12 5P A-COD | 1 | **1191020000** | | | |
| | 5-pole. PG 9 | SAIB-M-5/8S M12 5P A-COD | 1 | **1784750000** | SAIBW-M-5/8 M12 | 1 | **1803920000** |
| **Note** | | Other versions on request | | | Other versions on request | | |

## Technical data

| | | |
|---|---|---|
| Type of connection | Screw connection | Screw connection |
| Housing main material | CuZn | CuZn |
| Contact tube diameter | M12 | M12 |
| Cable diameter | 4...6 mm (PG7)/ 6...8 mm (PG9) | 6...8 mm (PG9) |
| Wire cross-section, min. / max. | 0.25...0.75 mm² | 0.14...0.5 mm² |
| Rated current | 4 A | 4 A |
| Rated voltage | 250 V (4-pole) / 125 V (5-pole) | 250 V (4-pole) / 125 V (5-pole) |
| Temperature range of housing | -25...+85 °C | -25...+85 °C |
| Protection degree | IP 67 | IP 67 |
| Contact surface | Gold-plated | Gold-plated |
| **Note** | Torque, see E.12 | Torque, see E.12 |

Torque, see E.12

## Dimensioned drawing

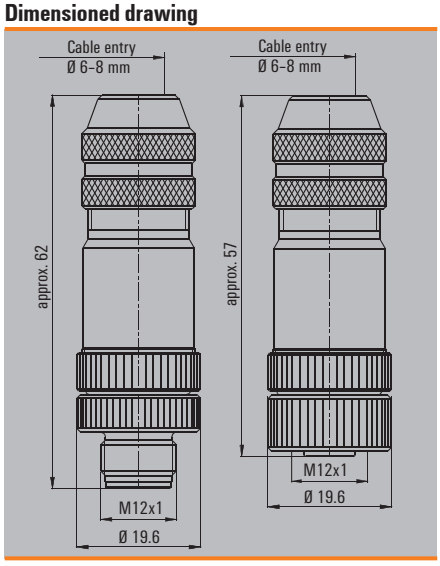


## Dimensioned drawing

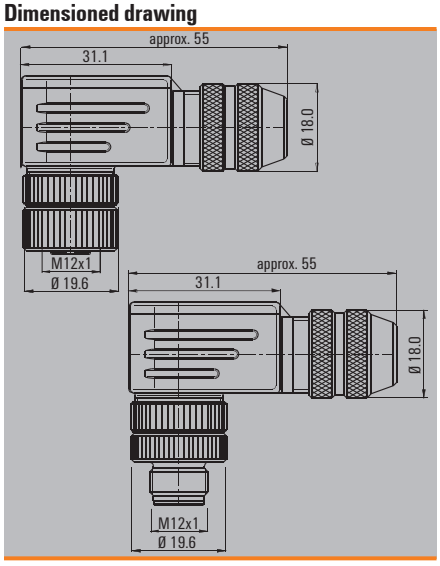

**M12 screw connection, metal (shielded)**
**B-coded**
**D-coded**

Industrial Ethernet

## SAISM / SAIBM

**straight**

## SAIS / SAIB

**straight**

## Ordering data

| Male | | Type | Qty. | Order No. | Type | Qty. | Order No. |
|---|---|---|---|---|---|---|---|
| | 3-pole. PG 9 | | | | SAIS-3-IDC-M12B-COD | 1 | 1864730000 |
| Straight | 4-pole. PG 9 | SAISM-4/8S-M12-4P D-COD | 1 | 1892120000 | | | |
| | 5-pole. PG 9 | SAISM 5/8S M12 5P B-COD | 1 | 1784790000 | | | |
| **Socket** | | | | | | | |
| | 3-pole. PG 9 | | | | SAIB-3-IDC-M12B-COD | 1 | 1864740000 |
| Straight | 4-pole. PG 9 | SAIBM-4/8S-M12-4P D-COD | 1 | 1892130000 | | | |
| | 5-pole. PG 9 | SAIBM 5/8S M12 5P B-COD | 1 | 1784780000 | | | |
| **Note** | | | | | | | |

## Technical data

| | | |
|---|---|---|
| Type of connection | Screw connection | Insulation displacement connection |
| Housing main material | CuZn | CuZn |
| Contact tube diameter | M12 | M12 |
| Cable diameter | 6...8 mm (PG9) | 7...8.8 mm |
| Cross-section for connected wire, min./max. | 0.14...0.75 mm² | 0.34...0.75 mm² |
| Rated current | 4 A | 4 A |
| Rated voltage | 250 V (4-pole) / 125 V / (5-pole) | 32 V |
| Temperature range of housing | -25...+85 °C | -25...+85 °C |
| Protection degree | IP 67 | IP 67 |
| Contact surface | Gold-plated | tinned |
| **Note** | Torque, see E.12 | PB = PROFIBUS (B-COD)<br>IE = Industrial Ethernet (D-COD) |

Torque, see E.12

## Dimensioned drawing

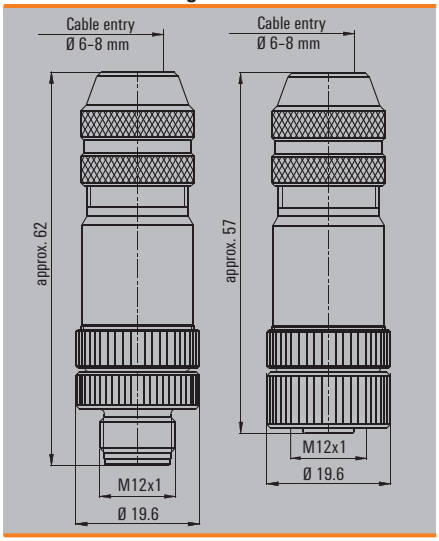


## Dimensioned drawing

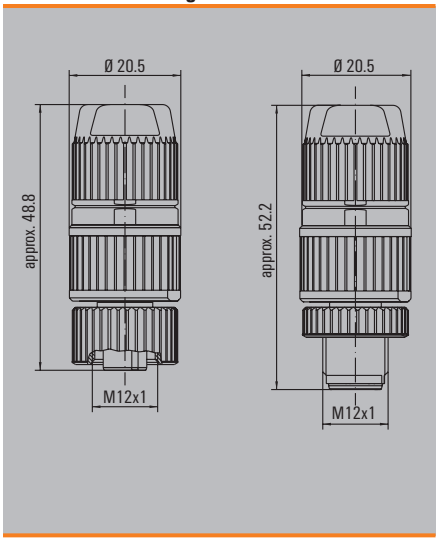

## M12 screw connection, metal (shielded)
## B-coded

## SAISW / SAIBW

**Angled**

### Ordering data

| Male | | Type | Qty. | Order No. |
|---|---|---|---|---|
| | 5-pole. PG 9 | SAISW-M-5/8 M12 B-COD | 1 | 1944570000 |
| **Socket** | | | | |
| | 5-pole. PG 9 | SAIBW-M-5/8 M12 B-COD | 1 | 1944580000 |
| **Note** | | | | |

### Technical data

| | |
|---|---|
| Type of connection | Screw connection |
| Housing main material | CuZn |
| Contact tube diameter | M12 |
| Cable diameter | 6...8 mm (PG9) |
| Wire cross-section, min. / max. | 0.14...0.75 mm² |
| Rated current | 4 A |
| Rated voltage | 125 V |
| Temperature range of housing | -25...+85 °C |
| Protection degree | IP 67 |
| Contact surface | Gold-plated |
| **Note** | Torque, see E.12 |

### Dimensioned drawing

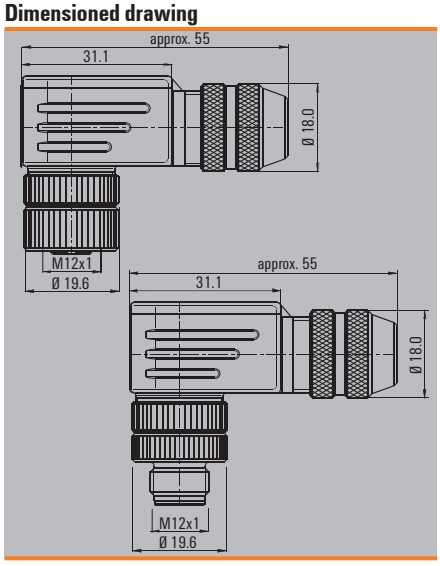


Torque, see E.12

## Tension-clamp connection, metal (shielded) D-coded

# Industrial Ethernet

### SAISM / SAIBM

straight

### SAISW / SAIBW

angled

## Ordering data

| Male | | | | |
|---|---|---|---|---|
| Straight | 4-pole. PG 9 | | | |
| **Socket** | | | | |
| Straight | 4-pole. PG 9 | | | |
| **Note** | | | | |

| Type | Qty. | Order No. |
|---|---|---|
| SAIBM-4/8S-M12 4P D-ZF | 1 | **1892130001** |
| | | |
| SAISM-4/8S-M12 4P D-ZF | 1 | **1892120001** |

| Type | Qty. | Order No. |
|---|---|---|
| SAISW-4/8S-M12 4P D-ZF | 1 | **1803930001** |
| | | |
| SAIBW-4/8S-M12 4P D-ZF | 1 | **1139330000** |

## Technical data

| | | |
|---|---|---|
| Type of connection | Tension clamp connection | Tension clamp connection |
| Housing main material | CuZn | CuZn |
| Contact tube diameter | M12 | M12 |
| Cable diameter | 6...8 mm (PG9) | 6...8 mm (PG9) |
| Wire cross-section, min. / max. | 0.25...0.5 mm² | 0.25...0.5 mm² |
| Rated current | 4 A | 4 A |
| Rated voltage | 250 V | 250 V |
| Temperature range of housing | -25...+85 °C | -25...+85 °C |
| Protection degree | IP 67 | IP 67 |
| Contact surface | Gold-plated | Gold-plated |
| **Note** | Torque, see E.12 | Torque, see E.12 |

Torque, see E.12

## Dimensioned drawing

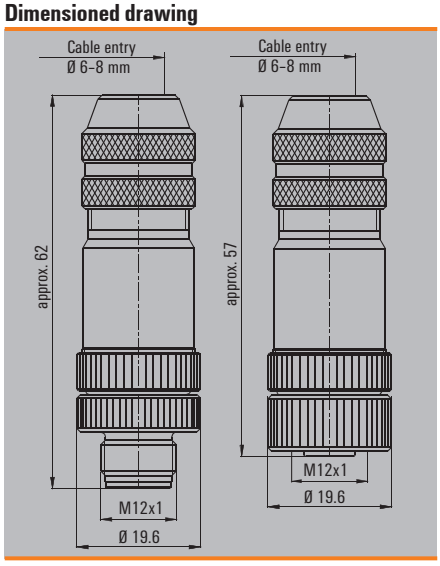


## Dimensioned drawing

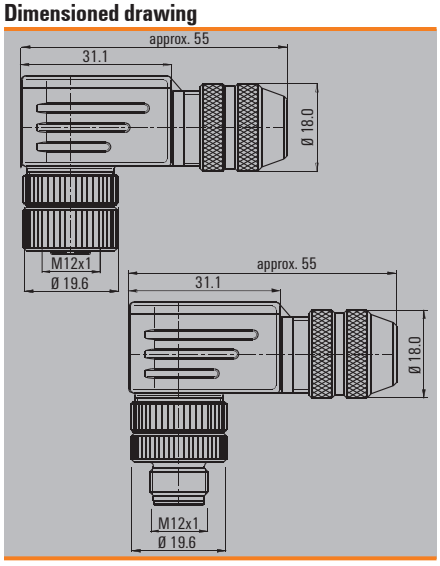

## Tension clamp connection M12
## A-coded

## SAIS-ZF

**straight**

## Ordering data

| Male | | Type | Qty. | Order No. |
|---|---|---|---|---|
| | 5-pole. PG 7 | SAIS-5/7-ZF | 1 | 1906390000 |
| **Socket** | | | | |
| | 5-pole. PG 7 | SAIB-5/7-ZF | 1 | 1924970000 |
| **Note** | | | | |

## Technical data

| | |
|---|---|
| Type of connection | Tension clamp connection |
| Housing main material | PA |
| Contact tube diameter | M12 |
| Cable diameter | 4...6 mm |
| Wire cross-section, min. / max. | 0.25...0.5 mm² |
| Rated current | 4 A |
| Rated voltage | 125 V |
| Temperature range of housing | -25...+85 °C |
| Protection degree | IP 67 |
| Contact surface | Gold-plated |
| **Note** | Torque, see E.12 |

## Dimensioned drawing

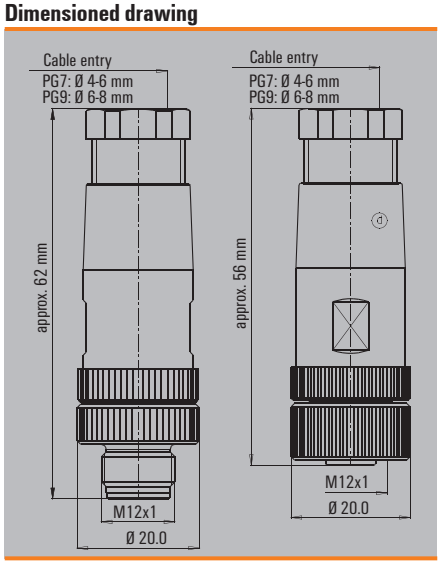


Torque, see E.12

## M8 screw connection

## SAIS / SAIB

**straight**

### Ordering data

| Male | | Type | Qty. | Order No. |
|---|---|---|---|---|
| | 3-pole | SAIS-M8-3P | 1 | 1803860000 |
| | 4-pole | SAIS-M8-4P | 1 | 1803850000 |
| **Socket** | | | | |
| | 3-pole | SAIB-M8-3P | 1 | 1803870000 |
| | 4-pole | SAIB-M8-4P | 1 | 1803880000 |
| **Note** | | Other versions on request | | |

### Technical data

| | |
|---|---|
| Type of connection | Screw connection |
| Housing main material | PA |
| Contact tube diameter | M8 |
| Cable diameter | 3.5...5 mm |
| Wire cross-section, min. / max. | 0.14...0.5 mm² |
| Rated current | 4 A |
| Rated voltage | 30 V |
| Temperature range of housing | -25...+85 °C |
| Protection degree | IP 67 |
| Contact surface | Gold-plated |
| **Note** | Torque, see E.12 |

### Dimensioned drawing

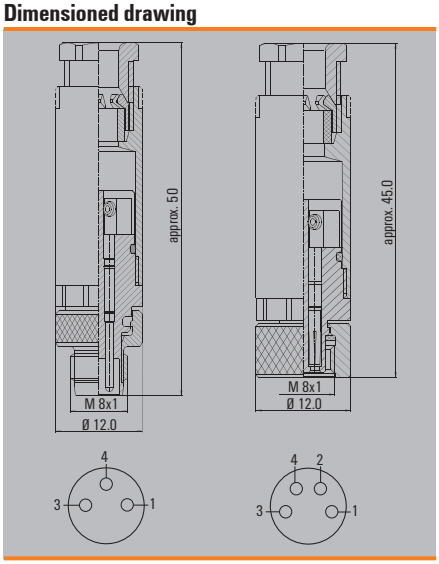


Torque, see E.12

## Solder connection M8, shielded
## screw connection M8, shielded

### SAISM / SAIBM

straight

### SAISM / SAIBM

straight

## Ordering data

| Male | Type | Qty. | Order No. | Type | Qty. | Order No. |
|---|---|---|---|---|---|---|
| 3-pole | SAISM-M8-3P(TL) | 1 | 1921030000 | SAISM-M8-3P-(IF) | 1 | 1010060000 |
| 4-pole | SAISM-M8-4P(TL) | 1 | 1921040000 | SAISM-M8-4P-(IF) | 1 | 1010070000 |
| **Socket** | | | | | | |
| 3-pole | SAIBM-M8-3P(TL) | 1 | 1921010000 | SAIBM-M8-3P-(IF) | 1 | 1010080000 |
| 4-pole | SAIBM-M8-4P(TL) | 1 | 1921020000 | SAIBM-M8-4P-(IF) | 1 | 1010090000 |
| **Note** | | | | | | |

## Technical data

| | | |
|---|---|---|
| Type of connection | Solder connection | Screw connection |
| Housing main material | CuZn | CuZn |
| Contact tube diameter | M8 | M8 |
| Cable diameter | 3.5...5.5 mm | 3.5...5 mm |
| Wire cross-section, min. / max. | 0.25...0.25 mm² | 0.14...0.5 mm² |
| Rated current | 4 A | 4 A |
| Rated voltage | 30 V | 30 V |
| Temperature range of housing | -25...+85 °C | -25...+85 °C |
| Protection degree | IP 67 | IP 67 |
| Contact surface | Gold-plated | Gold-plated |
| **Note** | Torque, see E.12 | IF = Iris-type springTorque, see E.12 |

Torque, see E.12

## Dimensioned drawing

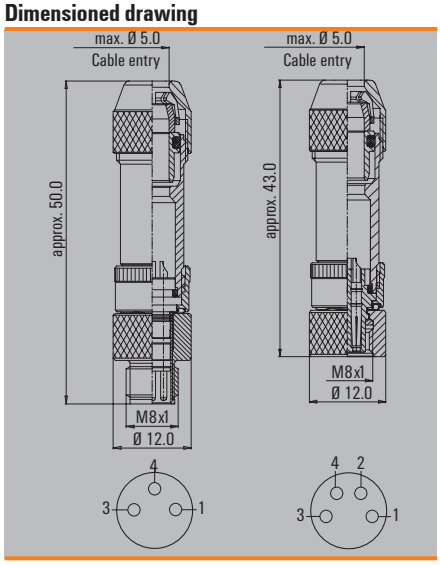


## Dimensioned drawing

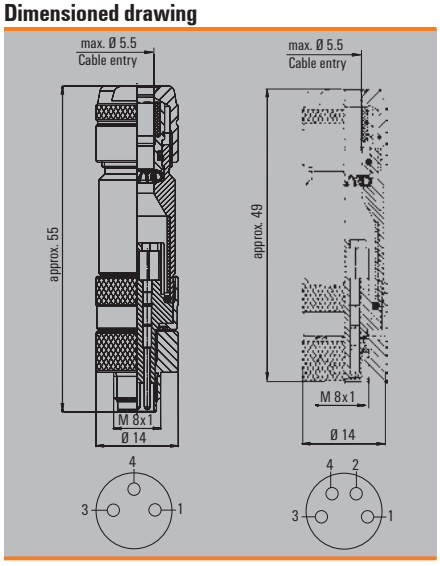

## Solder connection M8

### SAISW / SAIBW

**Angled**

## Ordering data

| Male | | Type | Qty. | Order No. |
|---|---|---|---|---|
| | 3-pole | SAISW-M8-3P(TL) | 1 | 1920990000 |
| | 4-pole | SAISW-M8-4P(TL) | 1 | 1921000000 |
| **Socket** | | | | |
| | 3-pole | SAIBW-M8-3P(TL) | 1 | 1920970000 |
| | 4-pole | SAIBW-M8-4P(TL) | 1 | 1920980000 |
| **Note** | | | | |

## Technical data

| | |
|---|---|
| Type of connection | Solder connection |
| Housing main material | CuZn |
| Contact tube diameter | M8 |
| Cable diameter | 3.5...5.5 mm |
| Wire cross-section, min. / max. | 0.25...0.25 mm² |
| Rated current | 4 A |
| Rated voltage | 30 V |
| Temperature range of housing | -25...+85 °C |
| Protection degree | IP 67 |
| Contact surface | Gold-plated |
| **Note** | Torque, see E.12 |

## Dimensioned drawing

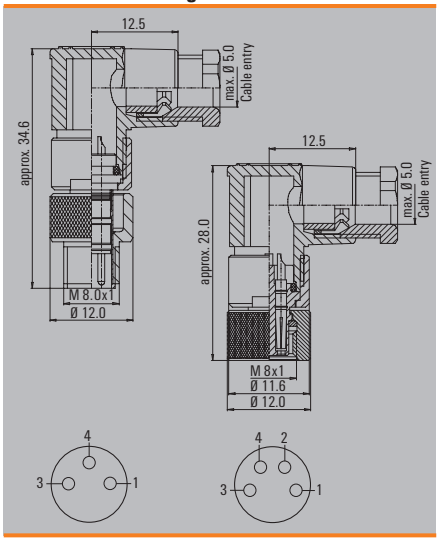


Torque, see E.12

# M8 and M12 insulation displacement connection (IDC)

**M8**

**M12**

The assembly of round plugs is very time consuming.
The cable has to be stripped and possibly, also fitted with a wire end ferrule.

Weidmüllers IDC plug in connector systems offers a quick fit connection system that saves both time and money.

The IDC quick fit, quick connection system is available for M12 and M8 connectors.



**Screwty®**

This is the perfect tool for all common cable glands on sensor and actuator cables.

The Screwty® fits M12 and M8 round plugs. Both types can be used for plugs and sockets on custom cables.

The handle of every Screwty® has a conventional 1/4 inch fitting and can be used for all sizes. Simply turn the tool to tighten or release a round plug.

The Screwty® is also available with a torque fitting.
This adjustable attachment can be used for all sizes.

The torque can be infinitely adjusted between 0.5 and 1.7 Nm.

## Insulation-displacement connection M12 A-coded

### SAIS IDC / SAIB IDC

**straight**

### SAISW IDC / SAIBW IDC

**Angled**

## Ordering data

| Male | | | |
|---|---|---|---|
| 4-pole | | | |
| **Socket** | | | |
| 4-pole | | | |
| **Note** | | | |

| Type | Qty. | Order No. |
|---|---|---|
| SAIS-4-IDC M12 small | 1 | **1781550001** |
| | | |
| SAIB-4-IDC-M12 small | 1 | **1781540001** |
| Other versions on request | | |

| Type | Qty. | Order No. |
|---|---|---|
| SAISW-4-IDC M12 | 1 | **1812870000** |
| | | |
| SAIBW-4-IDC M12 | 1 | **1812890000** |
| Other versions on request | | |

## Technical data

| | | |
|---|---|---|
| Type of connection | Insulation displacement connection | Insulation displacement connection |
| Housing main material | CuZn | CuZn |
| Contact tube diameter | M12 | M12 |
| Cable diameter | 4...5.1 mm | 4...5.1 mm |
| Wire cross-section, min. / max. | 0.14...0.34 mm² | 0.25...0.5 mm² |
| Rated current | 4 A | 4 A |
| Rated voltage | 32 V | 32 V |
| Temperature range of housing | -25...+85 °C | -25...+85 °C |
| Protection degree | IP 67 | IP 67 |
| Contact surface | tinned | tinned |
| **Note** | Torque, see E.12 | Torque, see E.12 |

Torque, see E.12

## Dimensioned drawing

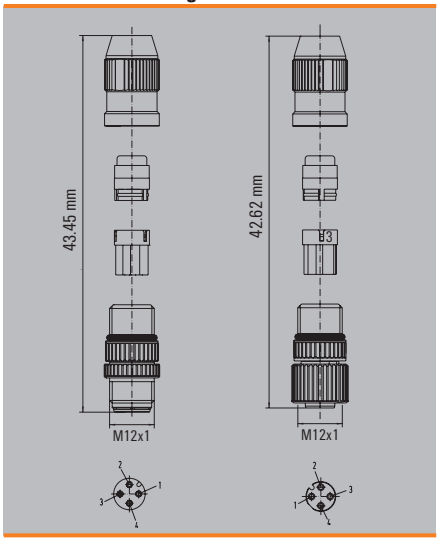


## Dimensioned drawing

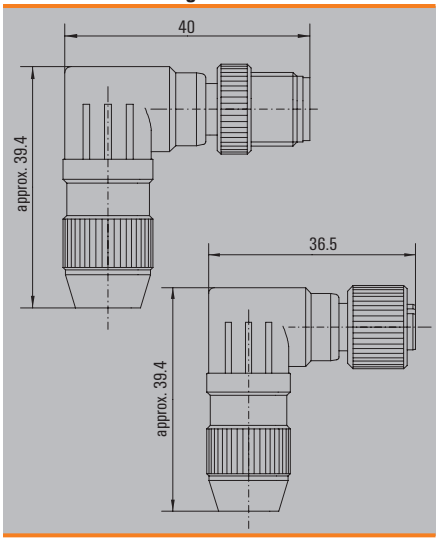

## Insulation-displacement connection M12 (0.75) A-coded

## SAIS IDC / SAIB IDC (0.75)

**straight**

### Ordering data

| Type | Qty. | Order No. |
|---|---|---|
| **Male** | | |
| 3-pole | SAIS-3-IDC (0,75) M12 | 1 | **1852720000** |
| 4-pole | SAIS-4-IDC (0,75) M12 | 1 | **1852740000** |
| **Socket** | | |
| 3-pole | SAIB-3-IDC (0,75) M12 | 1 | **1852730000** |
| 4-pole | SAIB-4-IDC (0,75) M12 | 1 | **1852750000** |
| **Note** | Other versions on request | | |

### Technical data

| | |
|---|---|
| Type of connection | Insulation displacement connection |
| Housing main material | CuZn |
| Contact tube diameter | M12 |
| Cable diameter | 5.5...8 mm |
| Wire cross-section, min. / max. | 0.34...0.75 mm² |
| Rated current | 6 A |
| Rated voltage | 50 V |
| Temperature range of housing | -25...+85 °C |
| Protection degree | IP 67 |
| Contact surface | tinned |
| **Note** | Torque, see E.12 |

### Dimensioned drawing

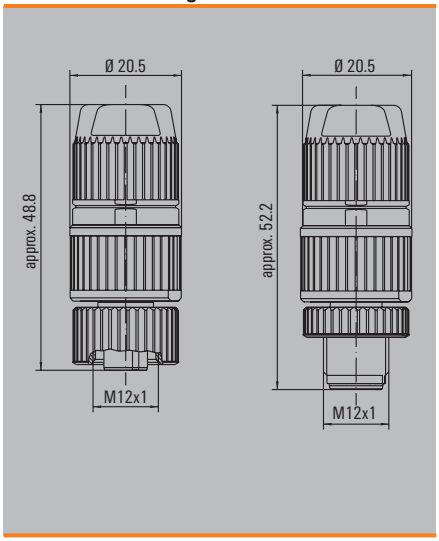


Torque, see E.12

## Insulation-displacement connection M8

### SAIS IDC / SAIB IDC

**straight**

## Ordering data

| Male | | Type | Qty. | Order No. |
|---|---|---|---|---|
| | 3-pole | SAIS-3-IDC M8 small | 1 | 1784040001 |
| | 4-pole | SAIS-4-IDC M8 small | 1 | 1784060001 |
| **Socket** | | | | |
| | 3-pole | SAIB-3-IDC-M8 small | 1 | 1784030001 |
| | 4-pole | SAIB-4-IDC-M8 small | 1 | 1784050001 |
| **Note** | | Other versions on request | | |

## Technical data

| | |
|---|---|
| Type of connection | Insulation displacement connection |
| Housing main material | CuZn |
| Contact tube diameter | M8 |
| Cable diameter | 3.2...5.4 mm |
| Wire cross-section, min. / max. | 0.14...0.34 mm² |
| Rated current | 4 A |
| Rated voltage | 32 V |
| Temperature range of housing | -25...+85 °C |
| Protection degree | IP 67 |
| Contact surface | tinned |
| **Note** | Torque, see E.12 |

## Dimensioned drawing

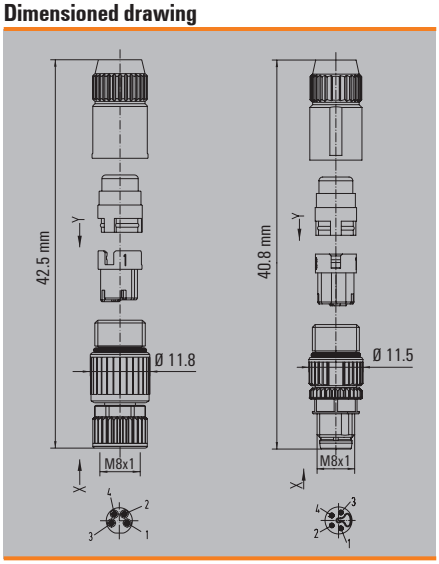


Torque, see E.12

## M16 plug-in connector
## Solder connection

## SAIS

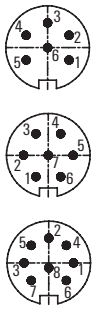

Male

### Ordering data

| Male | | Type | Qty. | Order No. |
|---|---|---|---|---|
| | 4-pole. PG 9 | SAIS-M16-4/9 | 1 | 1117970000 |
| | 5-pole. PG 9 | SAIS-M16-5/9 | 1 | 1117990000 |
| | 8-pole. PG 9 | SAIS-M16-8/9 | 1 | 1304430000 |
| | 2-pole. PG 9 | SAIS-M16-2/9 | 1 | 1321700000 |
| | 6-pole. PG 9 | SAIS-M16-6/9 | 1 | 1304390000 |
| | 7-pole. PG 9 | SAIS-M16-7/9 | 1 | 1118010000 |
| Note | | | | |

### Technical data

| | |
|---|---|
| Type of connection | Solder connection |
| Housing main material | PA |
| Contact tube diameter | M12 |
| Wire cross-section, min. / max. | 0.14...0.75 mm² |
| Rated current | 7 A |
| Rated voltage | 250 V |
| Temperature range of housing | -40 ... +85 ° C |
| Protection degree | IP 40 |
| Contact surface | Ag (silver) |
| Note | Torque, see E.12 |

### Dimensioned drawing

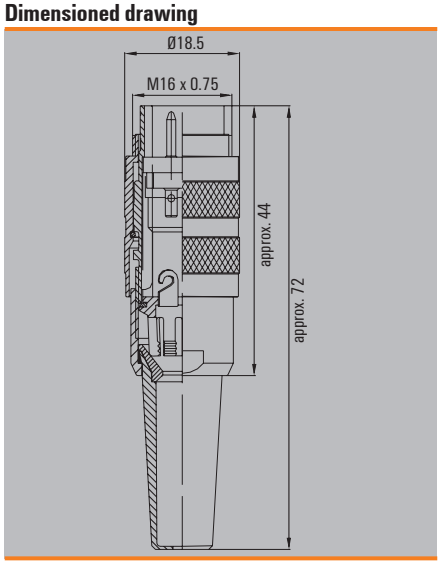


Torque, see E.12

# Y distributor

## M12/M12

**Mounting screw M3**

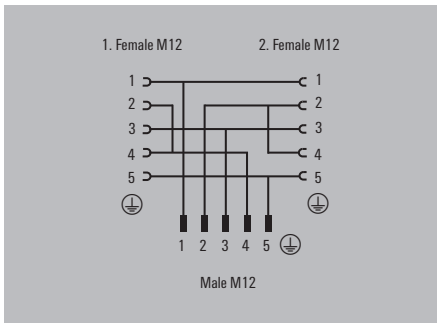


### Ordering data

| Type | Qty. | Order No. |
|---|---|---|
| Distribution, pin 2 + 4 bridged<br>SAI-Y-5S B2-4 M12/M12 | 1 | 1783410000 |

## M12/M12

**Mounting screw M3**

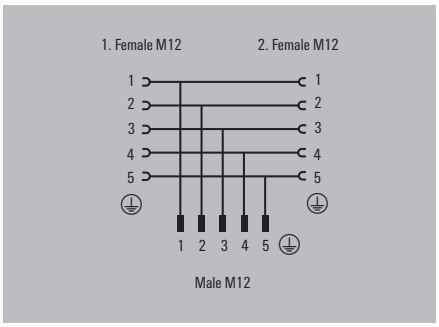


### Ordering data

| Type | Qty. | Order No. |
|---|---|---|
| Parallel distribution<br>SAI-Y-5S PARA M12/M12 | 1 | 1783430000 |

## M12/M12

**Mounting screw M3**

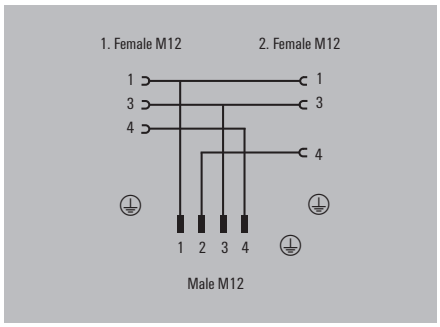


### Ordering data

| Type | Qty. | Order No. |
|---|---|---|
| SAI-Y-4S-M12/M12 | 1 | 1060730000 |

## M12/M12

**Mounting screw M3**

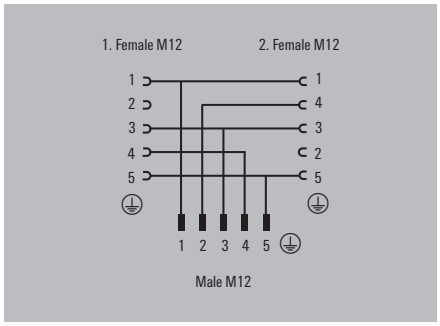


### Ordering data

| Type | Qty. | Order No. |
|---|---|---|
| Individual distribution<br>SAI-Y-5S-M12/M12 | 1 | 1826880000 |

## M12/M8

**Mounting screw M3**

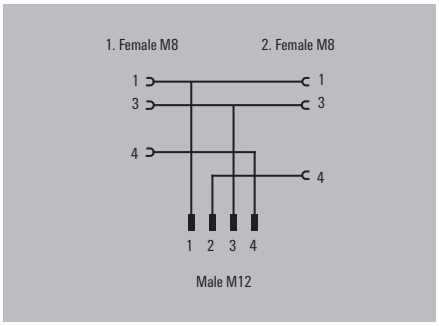


### Ordering data

| Type | Qty. | Order No. |
|---|---|---|
| Individual distribution<br>SAI-Y-4-4/2-4 M12/M8 | 1 | 1783420000 |

## M8/M8

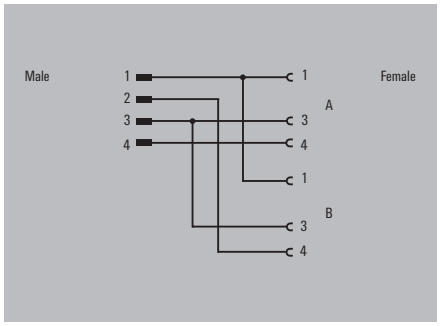


### Ordering data

| Type | Qty. | Order No. |
|---|---|---|
| Individual distribution<br>SAI-Y-4S M8/M8 | 1 | 1805660000 |

# T distributor

## M12/M12

**CANopen**

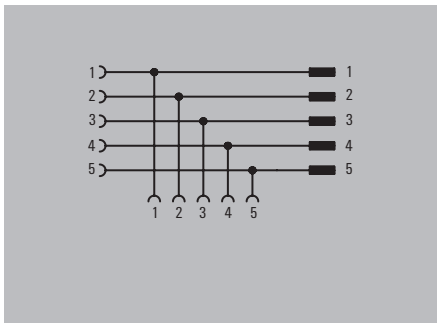


### Ordering data

| Type | Qty. | Order No. |
|---|---|---|
| SAI-T-5S-PARA | 1 | 1009370000 |

## M12/M12

**PROFIBUS**

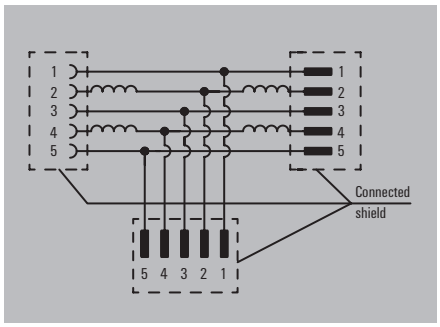


### Ordering data

| Type | Qty. | Order No. |
|---|---|---|
| SAI-T-5-M12/M12 B-COD | 1 | 1057940000 |

# Twin plugs and wall bushings

## Miniature twin plugs

Purpose-built machines often require individual cable lengths for the initiator cables. In some cases, two cables have to be of different lengths even when going to the same connector position.

To resolve this difficulty, we offer male and female connectors with two cable outlets that you can fabricate as you wish. The miniature twin plug is available with a 90° outlet and a straight outgoing cable direction. The 90° version can be twisted as you wish in steps of 90°.

### Ordering data

| Type | Qty. | Order No. |
|---|---|---|
| SAIS-ZW-5 (straight) | 1 | 9457540000 |
| SAIS-ZWW (90°) | 1 | 1837560000 |

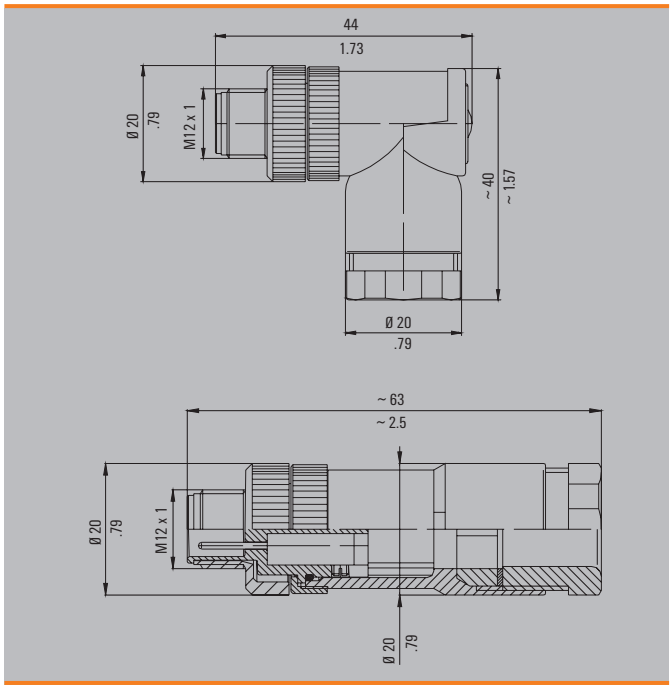

## Wall bushing

In general machine building, it is common to have cables passing through the walls of control cabinets. To meet the need for a wall penetration with M12 plug in connectors, the M12 bushing is included in the range. The wall bushing is available as 5 pole.

In addition, a bushing for PROFIBUS plug in connectors (PB) is available

### Ordering data

| Type | Length | Coding | Qty. | Order No. |
|---|---|---|---|---|
| SAI-WDF-5P M12 60 mm | 60 mm | A | 1 | 1819450000 |
| SAI-WDF-5PB M12 60 mm | 60 mm | B | 1 | 1820690000 |

## M12/M12

**Mounting screw M4**

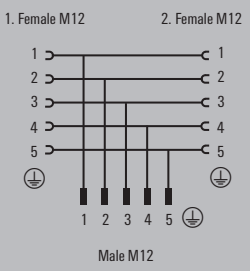


### Ordering data

| Type | Qty. | Order No. |
|---|---|---|
| SAI-Y-5S M12/M12 2 BO | 1 | 1881710000 |

# Protective caps for SAI distributors

**Protects against external effects when the I/O is not in use.**

## Protective cap M5

For SAI M5 distributors.

### Ordering data

| Type | Qty. | Order No. |
|---|---|---|
| SAI-SK-M5 | 50 | 1855310000 |

## Protective cap M8

For SAI M8 distributors.

### Ordering data

| Type | Qty. | Order No. |
|---|---|---|
| SAI-SK-M8 | 50 | 1802760000 |

## Protective cap M12

For SAI M12 distributors.

### Ordering data

| Type | Qty. | Order No. |
|---|---|---|
| SAI-SK-M12 | 30 | 9456050000 |

## Protective cap M12

For SAI metal distributors.

### Ordering data

| Type | Qty. | Order No. |
|---|---|---|
| SAI-SK-M12-M | 30 | 1802750000 |

## Protective cap M12 IDC

For SAI distributors with IDC connection.

### Ordering data

| Type | Qty. | Order No. |
|---|---|---|
| SAI-SK IDC | 10 | 1794850000 |

## Protective cap M12 Universal

Suitable for SAI M12 - universal distributor and appropriate M12 cables.

### Ordering data

| Type | Qty. | Order No. |
|---|---|---|
| SAI-SK-M12-UNI | 20 | 2330260000 |
| Hand operation possible. Screwty® compatible. | | |

## Protective cap M12 connector

Protection from external influences. For open plugs.
For attaching to cable.

### Ordering data

| Type | Qty. | Order No. |
|---|---|---|
| SAI-SK-M12 BU | 1 | 8425960000 |

## Protective cap M12 connector

Protects against external effects. For open plugs or sockets.

### Ordering data

| Type | Qty. | Order No. |
|---|---|---|
| Protective cap connector (yellow) | 50 | 1781520000 |

# M12, M8, M5 built-in plugs

For connection of cables to sensors and actuators, different built-in connectors are needed at the device end.

## M12

M12 plug in connectors are available with the following numbers of poles: 4 to 5-pole and 8-pole. Built-in connectors for M12 connections are all A-coded and have individual leads of 0.5 m. Fixing of the FP version is achieved with the supplied locknut. Also available are built-in connectors that can be screwed in from the front.

## M8

M8 connector requirements are covered by the 3 and 4 pole built-in male and female connectors. Like the M12 built-in connectors, these have a locknut for fastening into a housing wall. These connectors have 0.5m long leads attached.

## M5

Weidmüller also offers corresponding built-in connectors for the smallest of the plug in connectors, the M5. The M5 built-in connector is available in 3 and 4 pole versions. This plug in connector also has a locknut. The individual lead length with M5 built-in connectors is 0.2 m.

The cross sections of the individually attached leads are available from the technical data of the various families of plug in connectors.

## M12 (M16)

**SAIE-M12**

## M12 (M16)

**SAIE-M12 FP**

## Ordering data

| Male | Type | Qty. | Order No. | Type | Qty. | Order No. |
|---|---|---|---|---|---|---|
| 4-pole | SAIE-M12S-4-0.5U-M16 | 1 | **1861090000** | SAIE-M12S-4-0.5U-FP-M16 | 1 | **1861160000** |
| 5-pole | SAIE-M12S-5-0.5U-M16 | 1 | **1861230000** | SAIE-M12S-5-0.5U-FP-M16 | 1 | **1861170000** |
| 8-pole | SAIE-M12S-8-0.5U-M16 | 1 | **1861110000** | SAIE-M12S-8-0.5U-FP-M16 | 1 | **1861180000** |
| 12-pole | | | | SAIE-M12S-12-0.5U-FP-M16 | 1 | **1283550000** |
| **Socket** | | | | | | |
| 4-pole | SAIE-M12B-4-0.5U-M16 | 1 | **1861120000** | SAIE-M12B-4-0.5U-FP-M16 | 1 | **1861190000** |
| 5-pole | SAIE-M12B-5-0.5U-M16 | 1 | **1836910000** | SAIE-M12B-5-0.5U-FP-M16 | 1 | **1856110000** |
| 8-pole | SAIE-M12B-8-0,5U-M16 | 1 | **1861140000** | SAIE-M12B-8-0.5U-FP-M16 | 1 | **1861210000** |
| 12-pole | | | | SAIE-M12B-12-0.5U-FP-M16 | 1 | **1289140000** |
| **Note** | Other versions on request | | | FP with M16 cable gland<br>FP = can be freely positioned | | |

## Technical data

| | | |
|---|---|---|
| Cable gland | M16 | M16 |
| Housing main material | CuZn, nickel-plated | CuZn, nickel-plated |
| Contact tube diameter | M12 | M12 |
| Core cross-section | 0.34 mm² | 0.25 mm² |
| Rated current | 4 A | 2 A |
| Rated voltage (acc. to VDE standard 0110 ISO group C) | 250 V (4-pole) / 60 V (5-pole) / 30 V (8-pole) | 250 V (4-pole)/ 60 V (5-pole)/ 30 V (8 and 12-pole) |
| Temperature range of housing | -30...+90 °C | -30...+90 °C |
| Protection degree | IP 67 | IP 67 |
| Contact surface | Gold-plated | Gold-plated |
| **Note** | | |

## Dimensioned drawing

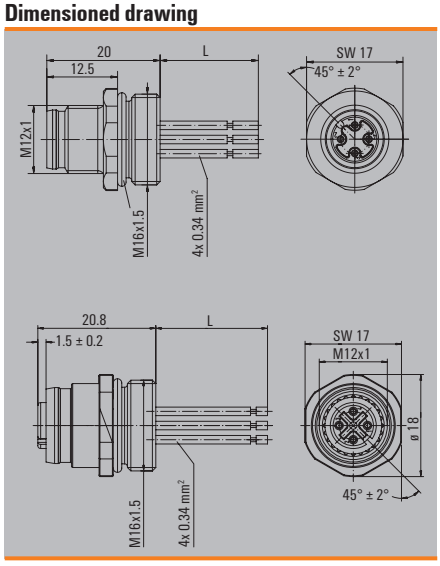


## Dimensioned drawing

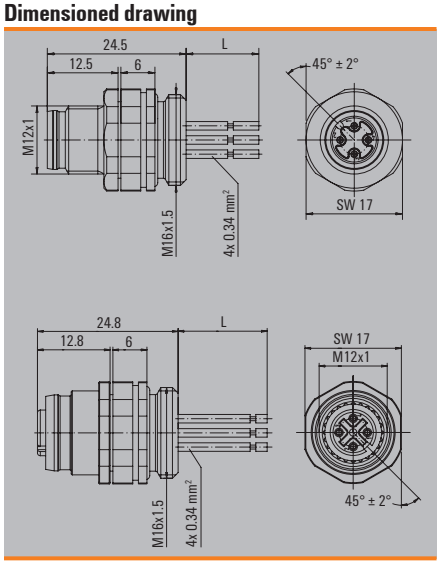

## M12

## Ordering data

| Male | | Type | Qty. | Order No. |
|---|---|---|---|---|
| | 4-pole | SAIE-M12S-4-0.5U P9 1.5 | 1 | 1353770000 |
| **Socket** | | | | |
| | 5-pole | SAIE-M12B-4-0.5U P9 1.5 | 1 | 1353780000 |
| **Note** | | | | |

## Technical data

| | |
|---|---|
| Cable gland | PG 9 |
| Housing main material | CuZn, nickel-plated |
| Contact tube diameter | M12 |
| Core cross-section | 1.5 mm² |
| Rated current | A |
| Rated voltage (acc. to VDE standard 0110 ISO group C) | 60 V |
| Temperature range of housing | -30...+90 °C |
| Protection degree | IP 67 |
| Contact surface | Gold-plated |
| **Note** | |

## Dimensioned drawing

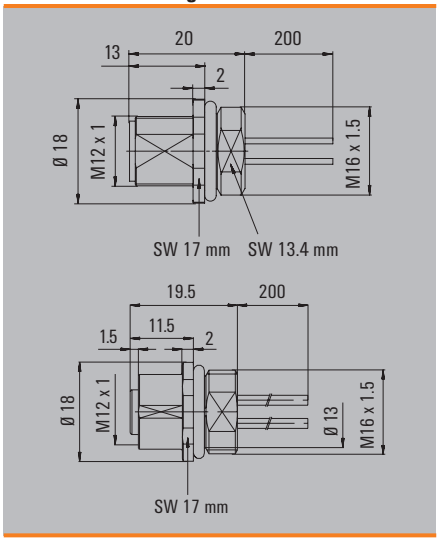

## M12 (PG 9)

**SAIE-M12 PG**

## M8

**SAIE-M8 FP**

## Ordering data

| Male | Type | Qty. | Order No. | Type | Qty. | Order No. |
|---|---|---|---|---|---|---|
| 3-pole | | | | SAIE-M8R-3-0.5U-FP-M8 | 1 | 1861280000 |
| 4-pole | SAIE-M12S-4-0.5U-PG9 | 1 | 1861220000 | SAIE-M8R-4-0.5U-FP-M8 | 1 | 1861290000 |
| 5-pole | SAIE-M12S-5-0.5U-PG9 | 1 | 1856120000 | | | |
| 8-pole | SAIE-M12S-8-0.5U-PG9 | 1 | 1861240000 | | | |
| **Socket** | | | | | | |
| 4-pole | SAIE-M12B-4-0.5U-PG9 | 1 | 1861250000 | | | |
| 5-pole | SAIE-M12B-5-0.5U-PG9 | 1 | 1814890000 | | | |
| 8-pole | SAIE-M12B-8-0.5U-PG9 | 1 | 1861270000 | | | |
| **Note** | with PG cable gland | | | Fixing nut included<br>FP = can be positioned as required | | |

## Technical data

| | | |
|---|---|---|
| Cable gland | PG 9 | M8 |
| Housing main material | CuZn, nickel-plated | CuZn, nickel-plated |
| Contact tube diameter | M12 | M8 |
| Core cross-section | 0.25 mm² | 0.25 mm² |
| Rated current | A | 4 A |
| Rated voltage (acc. to VDE standard 0110 ISO group C) | 250 V (4-pole) / 125 V (5-pole) / 60 V (8-pole) | 60 V (3-pole) / 30 V (4-pole) |
| Temperature range of housing | -30...+90 °C | -30...+90 °C |
| Protection degree | IP 67 | IP 67 |
| Contact surface | Gold-plated | Gold-plated |
| Approvals | cURus; GOSTME25 | cURus; GOSTME25 |
| **Note** | | |

## Dimensioned drawing

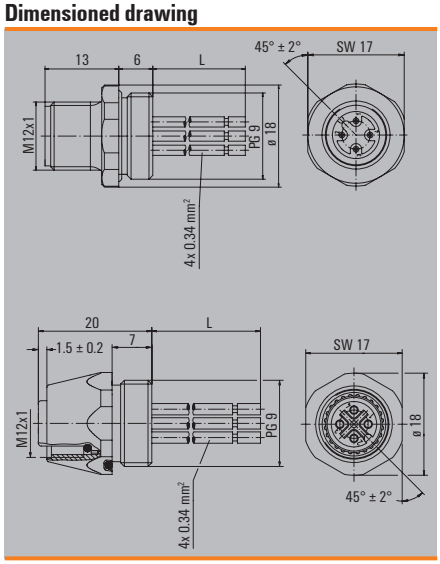


## Dimensioned drawing

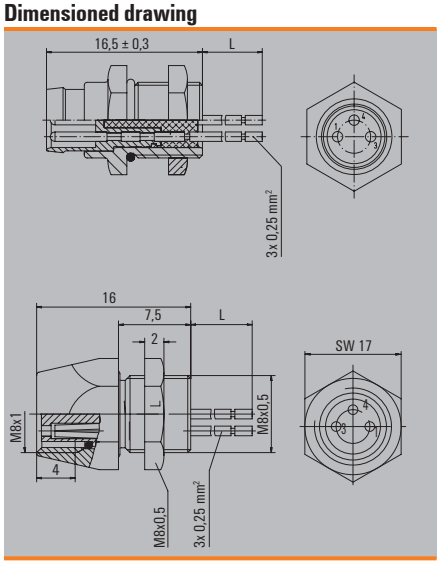

## M8

**SAIE-M8 FP**

## M5

**SAIE-M5**

## Ordering data

| Male | Type | Qty. | Order No. |
|---|---|---|---|
| 3-pole | SAIE-M8S-3-0.5U-FP-M8 | 1 | 1078730000 |
| 4-pole | SAIE-M8S-4-0.5U-FP-M8 | 1 | 1078720000 |
| **Socket** | | | |
| 3-pole | SAIE-M8B-3-0.5U-FP-M8 | 1 | 1856130000 |
| 4-pole | SAIE-M8B-4-0.5U-FP-M8 | 1 | 1856140000 |
| **Note** | Fixing nut included<br>FP = can be positioned as required | | |

| Type | Qty. | Order No. |
|---|---|---|
| SAIE-M5S-3-0.2U | 1 | 1873050000 |
| SAIE-M5S-4-0.2U | 1 | 1873030000 |
| | | |
| SAIE-M5B-3-0.2U | 1 | 1873060000 |
| SAIE-M5B-4-0.2U | 1 | 1873040000 |
| Fixing nut included | | |

## Technical data

| | | |
|---|---|---|
| Cable gland | M8 | M5 |
| Housing main material | CuZn, nickel-plated | CuZn, nickel-plated |
| Contact tube diameter | M8 | M5 |
| Core cross-section | 0.25 mm² | 0.14 mm² |
| Rated current | 4 A | 1 A |
| Rated voltage (acc. to VDE standard 0110 ISO group C) | 60 V (3-pole) / 30 V (4-pole) | 60 V |
| Temperature range of housing | -30...+90 °C | -25...+80 °C |
| Protection degree | IP 67 | IP 67 |
| Contact surface | Gold-plated | Gold-plated |
| Approvals | | |
| **Note** | | |

## Dimensioned drawing

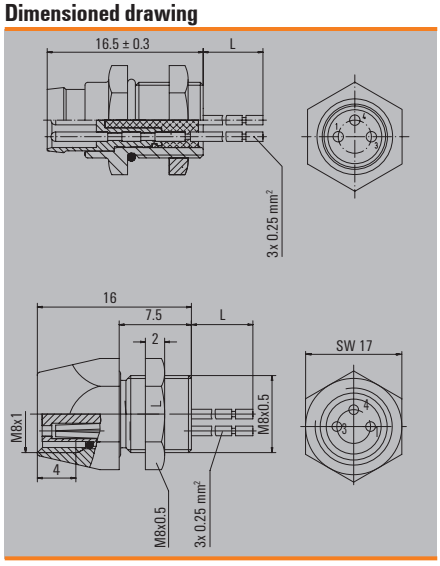


## Dimensioned drawing

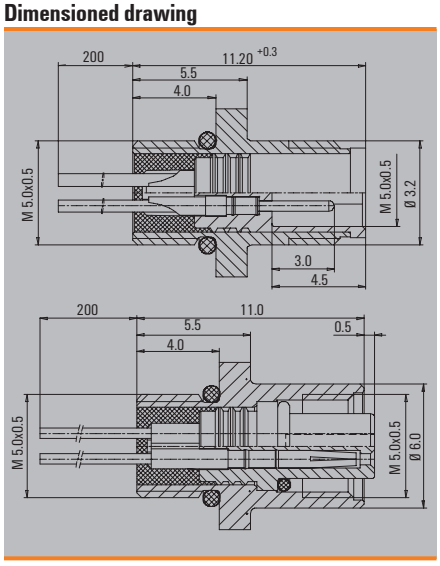

## M12

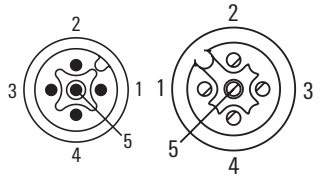


Male Female

### Ordering data

| Male | | Type | QTY | Order No. |
|---|---|---|---|---|
| | 5-pole | SAIE-M12S-5-LP | 500 | 1312980000 |
| **Socket** | | | | |
| | 5-pole | SAIE-M12B-5-LP | 500 | 1312970000 |
| **Note** | | | | |

### Technical data

| | |
|---|---|
| Housing main material | Zinc diecast |
| Contact tube diameter | M12 |
| Rated current | 4 A |
| Rated voltage | 30 V |
| Temperature range of housing | -20 ... +90 °C |
| Protection degree | IP 68 |
| Contact surface | Gold-plated |
| Approvals | |
| **Note** | |

### Dimensioned drawing

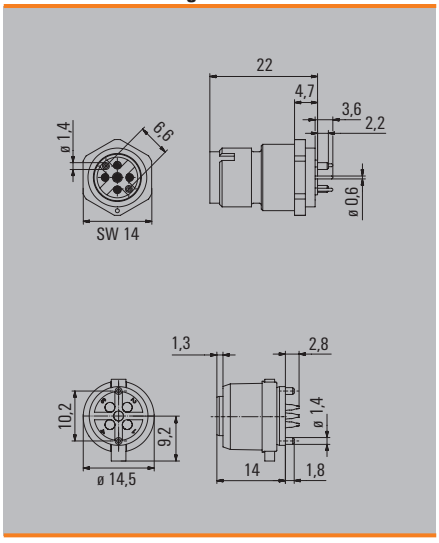

## M12 built-in connector, mounts behind wall
## A-coded
## Shielded

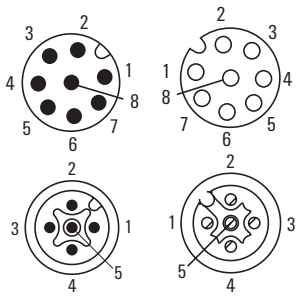

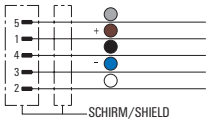


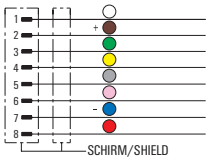


### Ordering data

| Male, straight | | 5-pole Type | 5-pole Order No. | 8-pole Type | 8-pole Order No. |
|---|---|---|---|---|---|
| PUR | 0.5 m | SAIE-M12S-5S0.5U HW | 1341230050 | SAIE-M12S-8S0.5U HW | 1341240050 |
| PUR | 2.0 m | SAIE-M12S-5S2.0U HW | 1341230200 | SAIE-M12S-8S2.0U HW | 1341240200 |
| **Female, straight** | | | | | |
| PUR | 0.5 m | SAIE-M12B-5S0.5U HW | 1222270050 | SAIE-M12B-8S0.5U HW | 1223650050 |
| PUR | 2.0 m | SAIE-M12B-5S2.0U HW | 1222270000 | SAIE-M12B-8S2.0U HW | 1223650000 |
| **Note** | | | | | |

### Standard cable lengths

| | | |
|---|---|---|
| All cables listed in the ordering data have a length of 1.5 metres. The last four ordering digits must be changed when ordering other standard cable lengths. | 1.5 m | xxxxxx0150 |
| | 3.0 m | xxxxxx0300 |
| | 5.0 m | xxxxxx0500 |
| | 10.0 m | xxxxxx1000 |

### Technical data

| | |
|---|---|
| Cable gland | PG 9 |
| Housing main material | Zinc diecast, nickel-plated |
| Contact tube diameter | M12 |
| Core cross-section | 0.25 mm² |
| Rated current | 4 A |
| Rated voltage | 125 V |
| Temperature range of housing | -5 ... +70 °C |
| Protection degree | IP 68 |
| Contact surface | Gold-plated |

### Dimensioned drawing

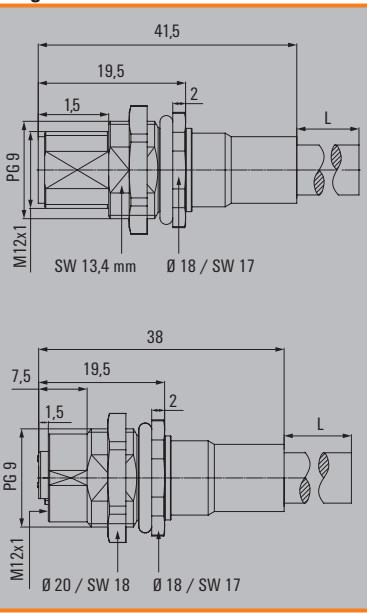

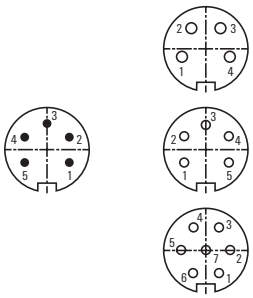


## SAIE

## SAIE

## Ordering data

| Male | | | |
|---|---|---|---|
| | 5-pole. PG 9 | | |
| **Socket** | | | |
| | 4-pole | | |
| | 5-pole | | |
| | 7-pole | | |
| **Note** | | | |

| Type | QTY | Order No. |
|---|---|---|
| SAIE-M16S-5-HWM | 1 | **1269790000** |
| | | |
| | | |
| | | |
| | | |
| | | |

| Type | QTY | Order No. |
|---|---|---|
| | | |
| | | |
| SAIE-M16B-4-L | 20 | **1326720000** |
| SAIE-M16B-5-L | 1 | **1326730000** |
| SAIE-M16B-7-L | 1 | **1326740000** |
| | | |

## Technical data

| | | |
|---|---|---|
| Type of connection | Solder connection | Solder connection |
| Housing main material | Zinc diecast, nickel-plated | Zinc diecast, nickel-plated |
| Contact tube diameter | M16 | M16 |
| Wire cross-section, min. / max. | 0.14...0.75 mm² | 0.14...0.75 mm² |
| Rated current | 6 A | 5 A |
| Rated voltage | 250 V | 125 V |
| Temperature range of housing | -30...+90 °C | -40 ... +85 ° C |
| Protection degree | IP 67 | IP 40 |
| Contact surface | Ag (silver) | Ag (silver) |
| **Note** | | |

## Dimensioned drawing

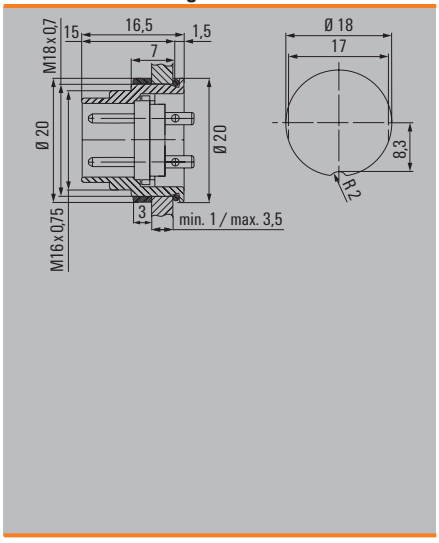


## Dimensioned drawing

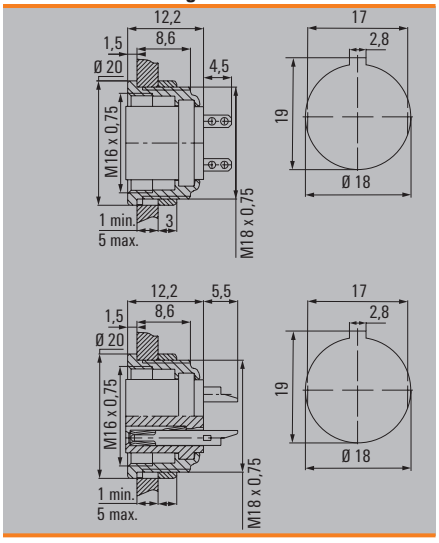

# Introduction

Valve plugs for custom cables are often incorporated when designing special machines. Such plugs are used to connect solenoid valves.

Weidmüller valve plugs are available in all customary forms.
The range includes form A, form B and form C to industry standards and to DIN.

These valve plugs are available without circuitry in 3-pole and 4-pole versions.
A flat gasket seal is included which, when screwed on, guarantees
IP 65 protection.

## Ordering data

| Type | (Qty.=1) | Order No. |
|---|---|---|
| **Type A** | | |
| SAIB-VSA-3P/250/9-OB | | **1873070000** |
| SAIB-VSA-4P/250/9-OB | | **1873080000** |
| SAIB-VSA-3P/250/11-OB | | **1873090000** |
| SAIB-VSA-4P/250/11-OB | | **1873100000** |
| SAIB-VSA-3P/230/9/LD | | **1873110000** |
| SAIB-VSA-3P/24/9/LD | | **1873120000** |
| SAIB-VSA-3P/230/9-H/OB | | **1873130000** |
| SAIB-VSA-4P/230/9-H/OB | | **1873140000** |
| SAIB-VSA-3P/230/11-H/OB | | **1873150000** |
| SAIB-VSA-4P/230/11-H/OB | | **1873160000** |
| **Type B** | | |
| SAIB-VSB-3P/250/9-OB | | **1873170000** |
| SAIB-VSB-3P/24/9/LD | | **1873180000** |
| SAIB-VSBD-3P/250/9-OB | | **1873190000** |
| **Type C** | | |
| SAIB-VSC-3P/250/7-OB | | **1873200000** |
| SAIB-VSC-4P/250/7-OB | | **1873210000** |
| SAIB-VSCD-3P/250/7-OB | | **1873220000** |
| SAIB-VSCD-4P/250/7-OB | | **1873230000** |
| All types supplied complete with seal. | | |

## Legend

| Designation code | | |
|---|---|---|
| VS- | Valve plug | |
| OB- | Without cables | |
| 3P, 4P- | No. of poles | |
| 7, 9, 11- | Cable entry (PG) | |
| H | High form | |
| T | Transparent housing | |
| 3P | 2 + PE | |
| 4P | 3 + PE | |
| LD | 24 V LED free-wheel diode | |

| Type of valve plug | Contact gap | |
|---|---|---|
| A | 18.0 mm | |
| B | 11.0 mm | to industry standard |
| BD | 10.0 mm | to DIN |
| C | 9.4 mm | to industry standard |
| CD | 8.0 mm | to DIN |

**Plug in connector Type A**
to DIN EN 175301-803

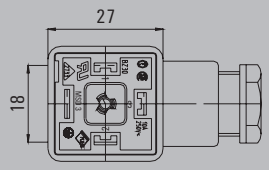


Contact gap: 18 mm

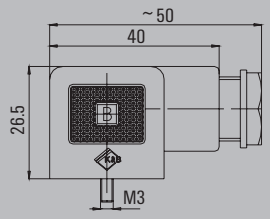


Type VSA

**Plug in connector Type B**

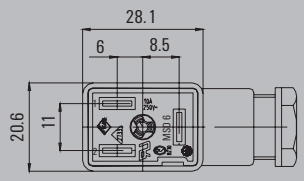


Contact gap: 11 mm
industry standard

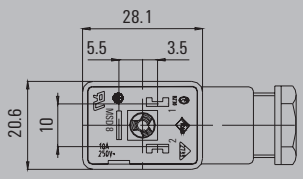


Contact gap: 10 mm
to DIN 43650 (ISO 6952)

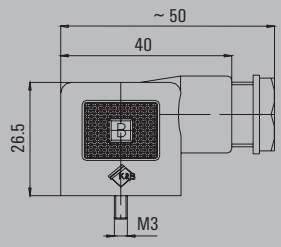


Type VSB/VSBD

**Plug in connector Type C**

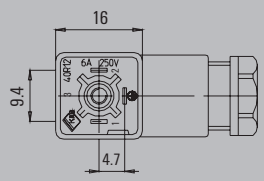


Contact gap: 9.4 mm
industry standard

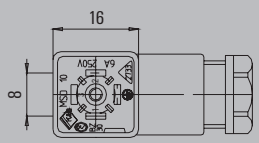


Contact gap: 8 mm
to DIN 43650 (ISO 6952)

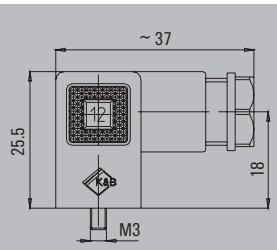


Type VSC/VSCD

# Protective sleeve adapter

In machine construction, it is very common for cables to be run in the open air. To be able to protect cables from damage through a wide range of causes such as rodents, it is some-times necessary to protect the cable with a protective sleeve.

To fasten the protective sleeve to a plug in connector designed for custom assembly, Weidmüller offers a protective sleeve adapter. This adapter is used instead of the PG7 cable gland. The protective sleeve is quick to fit, protecting the cable straight away.



## Ordering data

| Type | Qty. | Order No. |
|---|---|---|
| SAI-SSA-PG7 | 10 | 1938300000 |

## Fitting a protective sleeve adapter

1. Unscrewing the PG7 cable gland

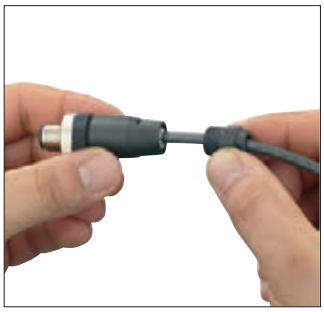

2. Screwing on the protective sleeve adapter

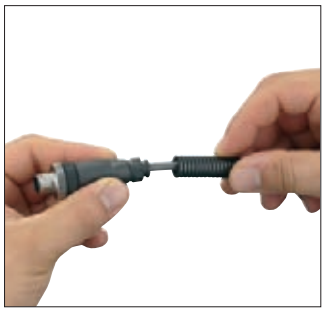

3. Fitting a PG7 protective sleeve

4. Finished

## Connection of protective sleeve adapter to other plug connectors

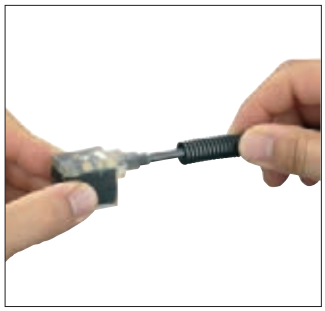

1. Connect the protective tubing to the tube union

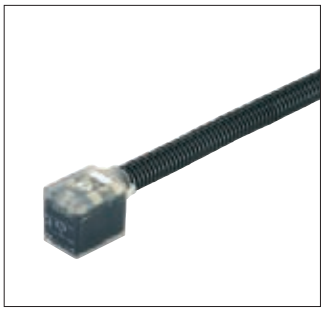

2. Finished

The protective sleeve is also suitable for protecting cables with valve plugs. A corresponding connecting piece is already present on valve plugs with moulded seal.

# 7/8" connectors


| | | |
|---|---|---|
| **7/8" connectors** | Product description | E.2 |
| | Pin Outs | E.3 |
| | Construction of the customisable connector and assembly instructions | E.4 |
| | 7/8" connector | E.6 |
| | 7/8" built-in connector | E.8 |
| | 7/8" sensor cables | E.11 |

# Product description

Connectors with threads measured in inches have been used for many years, mainly outside Europe. The 7/8" thread types are the main group found within this group of products. They are essentially used in bus systems like Fieldbus Foundation or DeviceNet. In recent years these connectors also have become popular as supply ports for I/O nodes, due to the low number of pins and their sturdy construction.

**Weidmüller now offers this product range in the following versions:**
- Customisable connectors
- Built-in connectors
- Moulded cables.



7/8" connectors are available in 3-pole (2 + PE), 4-pole (3 + PE), 5-pole (4 + PE) versions. Connectors with different pole counts are not plug compatible.
The contact surfaces are gold-plated.

## Customisable connectors

In certain circumstances it may be required to be able to assemble cables yourself. This may be for various reasons. For example, the length of the cable cannot be determined in advance, or during servicing, there may be a requirement to produce connections yourself. So that this can be easily achieved, simple connection solutions are required. With 7/8" connectors the screw connection provides the best solution due to its small dimensions and easy assembly. These customisable connectors also have sufficient space for the stranded wire ends. Weidmüller offers versions with differently sized cable glands to properly fit larger and smaller cable diameters. The contacts are gold-plated, for higher contact reliability.

## Pin out

**Male insert (mating side)**

**2+PE-pole**

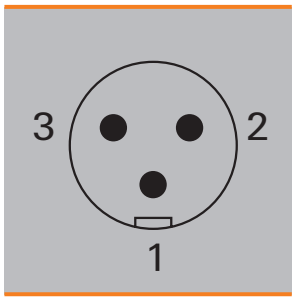


**4-pole**

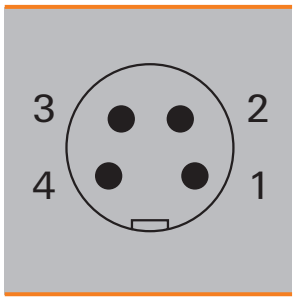


**4+PE-pole**

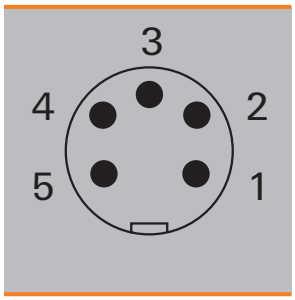


**Female insert (mating side)**

**2+PE-pole**

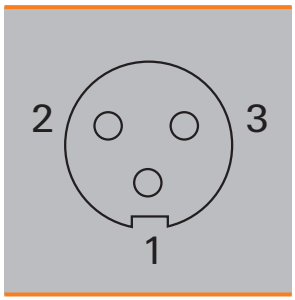


**4-pole**

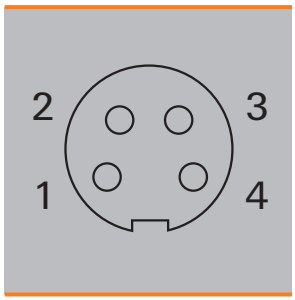


**4+PE-pole**

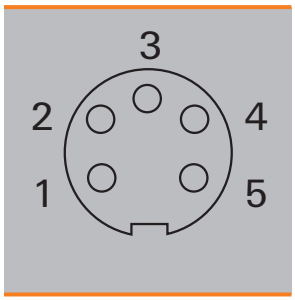

# Customisable connector assembly instructions

## Straight connector

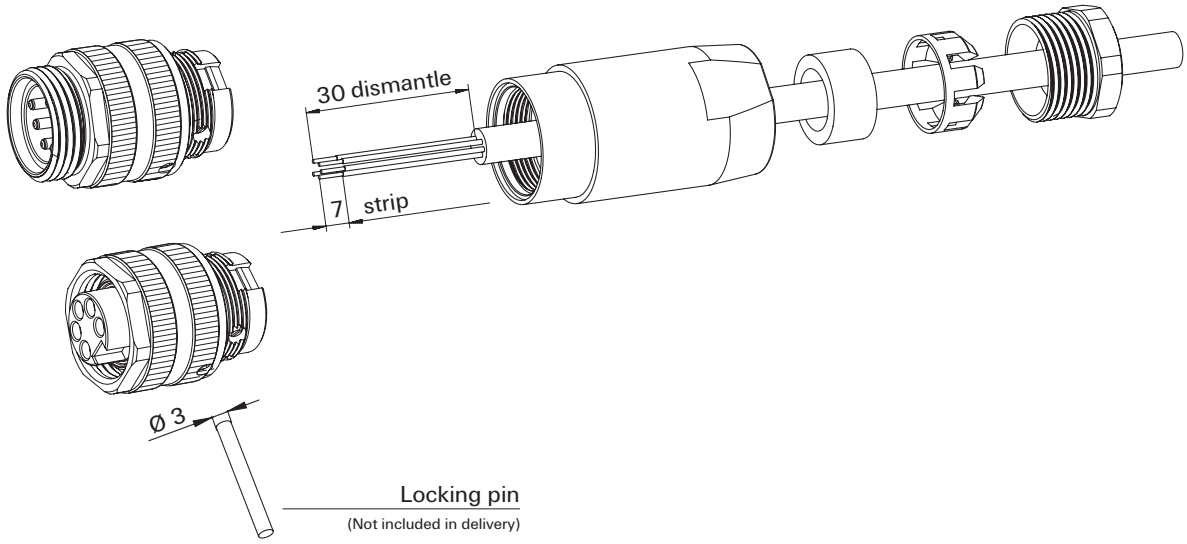


## Angled connector

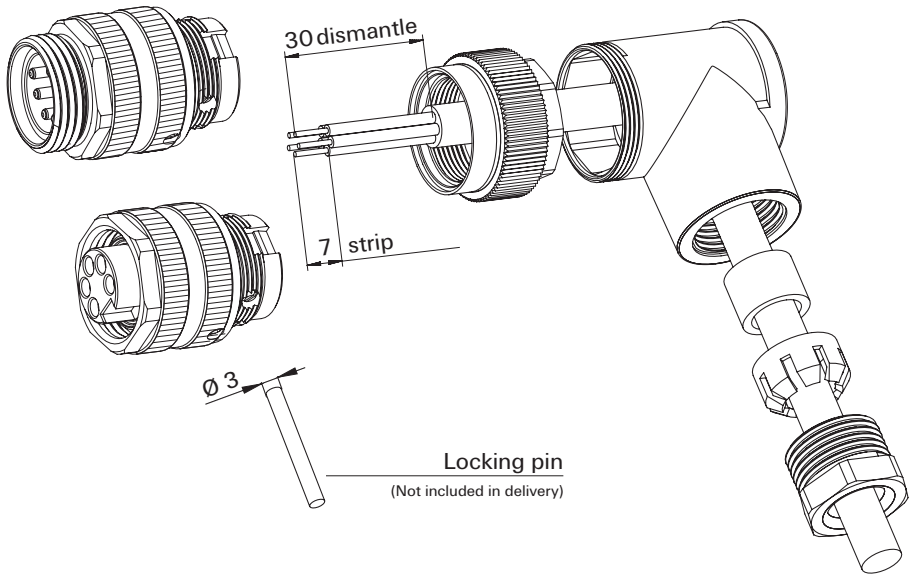

# Individual component drawing of the customisable connector

## Straight connector

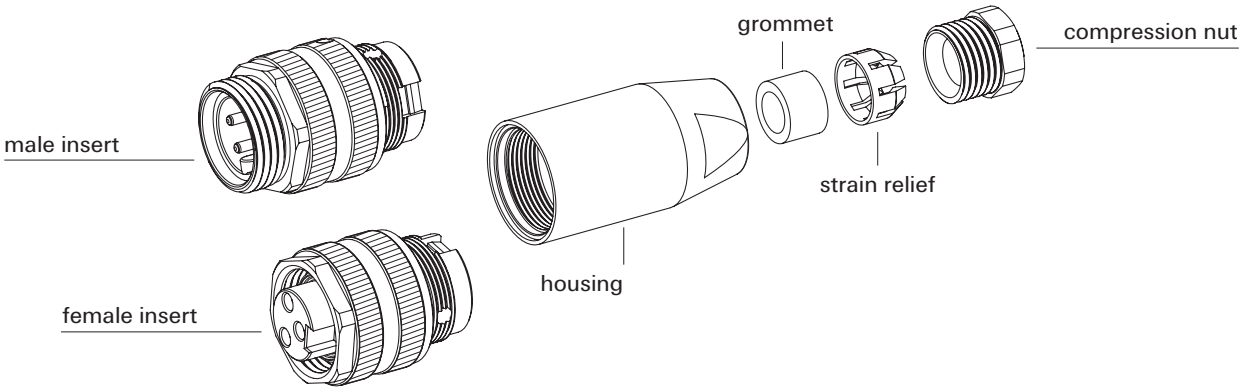


## Angled connector

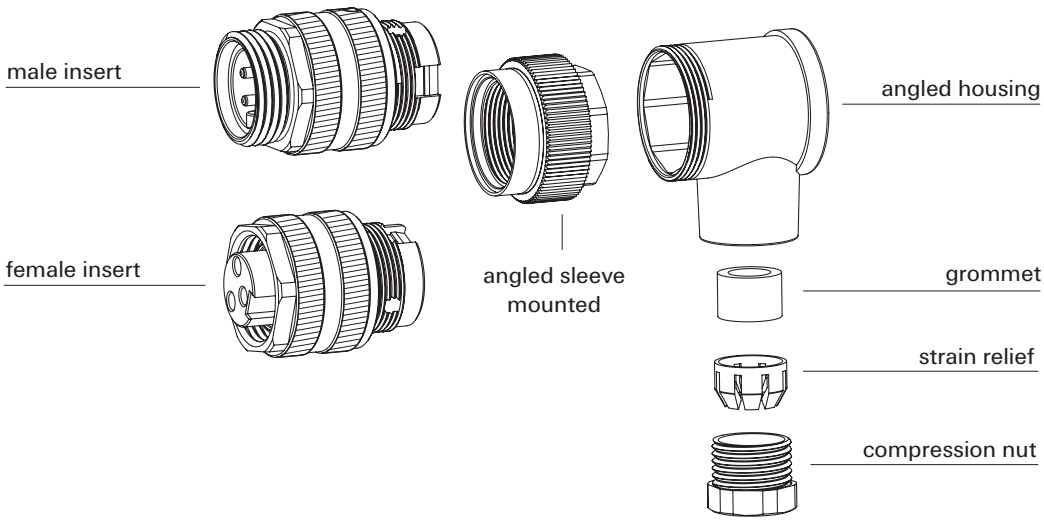

## Screw connection 7/8", PG9
## Cable diameter 6...8 mm

### SAIS / SAIB

**Straight**

### SAISW / SAIBW

**Angled**

## Ordering data

| Male | | Type | QTY | Order No. | Type | QTY | Order No. |
|---|---|---|---|---|---|---|---|
| | 3-pole. PG 9 | SAIS-3/9-7/8" | 1 | 1291870000 | SAISW-3/9-7/8" | 1 | 1291890000 |
| | 4-pole. PG 9 | SAIS-4/9-7/8" | 1 | 1808840000 | SAISW-4/9-7/8" | 1 | 1808830000 |
| | 5-pole. PG 9 | SAIS-5/9-7/8" | 1 | 1301220000 | SAISW-5/9-7/8" | 1 | 1291980000 |
| **Socket** | | | | | | | |
| | 3-pole. PG 9 | SAIB-3/9-7/8" | 1 | 1291910000 | SAIBW-3/9-7/8" | 1 | 1291930000 |
| | 4-pole. PG 9 | SAIB-4/9-7/8" | 1 | 1812480000 | SAIBW-4/9-7/8" | 1 | 1812470000 |
| | 5-pole. PG 9 | SAIB-5/9-7/8" | 1 | 1292000000 | SAIBW-5/9-7/8" | 1 | 1292020000 |
| **Note** | | | | | | | |

## Technical data

| | | |
|---|---|---|
| Type of connection | Screw connection | Screw connection |
| Housing main material | PBT | PBT |
| Contact tube diameter | 7/8" | 7/8" |
| Cable diameter | 6...8 mm (PG9) | 6...8 mm (PG9) |
| Wire cross-section, min. / max. | 0.5...1.5 mm² | 0.5...1.5 mm² |
| Rated current | 9A (4- and 5-pole), 12A (3-pole) | 9A (4- and 5-pole), 12A (3-pole) |
| Rated voltage | 250 V | 250 V |
| Temperature range of housing | -25...+85 °C | -25...+85 °C |
| Protection degree | IP 67 | IP 67 |
| Contact surface | Gold-plated | Gold-plated |
| Contact material | CuZn | CuZn |
| Plugging cycles | ≥ 50 | ≥ 50 |
| Pollution severity | 3 | 3 |
| **Note** | Torque, see E.12 | Torque, see E.12 |

## Dimensioned drawing

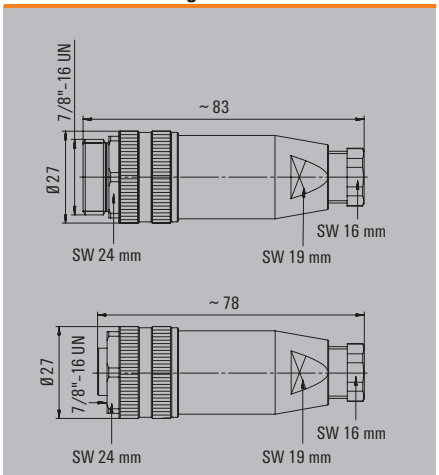


## Dimensioned drawing

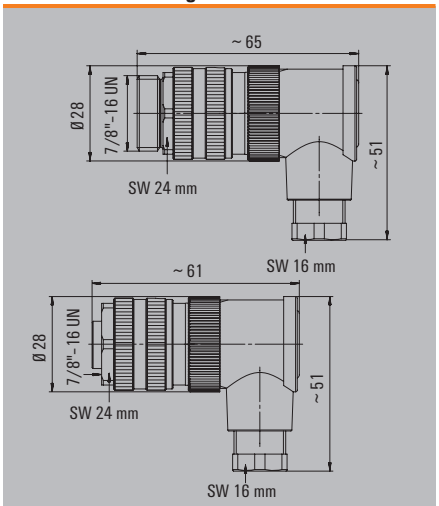


Torque, see E.12

**Screw connection 7/8", PG11**
**Cable diameter 8...10 mm**

## SAIS / SAIB

**Angled**

## SAISW / SAIBW

**Angled**

## Ordering data

| Male | Type | QTY | Order No. | Type | QTY | Order No. |
|---|---|---|---|---|---|---|
| 3-pole. PG 11 | SAIS-3/11-7/8" | 1 | 1291880000 | SAISW-3/11-7/8" | 1 | 1291900000 |
| 4-pole. PG 11 | SAIS-4/11-7/8" | 1 | 1291950000 | SAISW-4/11-7/8" | 1 | 1292040000 |
| 5-pole. PG 11 | SAIS-5/11-7/8" | 1 | 1291970000 | SAISW-5/11-7/8" | 1 | 1291990000 |
| **Socket** | | | | | | |
| 3-pole. PG 11 | SAIB-3/11-7/8" | 1 | 1291920000 | SAIBW-3/11-7/8" | 1 | 1291940000 |
| 4-pole. PG 11 | SAIB-4/11-7/8" | 1 | 1292050000 | SAIBW-4/11-7/8" | 1 | 1292070000 |
| 5-pole. PG 11 | SAIB-5/11-7/8" | 1 | 1292010000 | SAIBW-5/11-7/8" | 1 | 1292030000 |
| **Note** | | | | | | |

## Technical data

| | | |
|---|---|---|
| Type of connection | Screw connection | Screw connection |
| Housing main material | PBT | PBT |
| Contact tube diameter | 7/8" | 7/8" |
| Cable diameter | 8...10 mm (PG11) | 8...10 mm (PG11) |
| Wire cross-section, min. / max. | 0.5...1.5 mm² | 0.5...1.5 mm² |
| Rated current | 9A (4- and 5-pole), 12A (3-pole) | 9A (4- and 5-pole), 12A (3-pole) |
| Rated voltage | 250 V | 250 V |
| Temperature range of housing | -25...+85 °C | -25...+85 °C |
| Protection degree | IP 67 | IP 67 |
| Contact surface | Gold-plated | Gold-plated |
| Contact material | CuZn | CuZn |
| Plugging cycles | ≥ 50 | ≥ 50 |
| Pollution severity | 3 | 3 |
| **Note** | Torque, see E.12 | Torque, see E.12 |

## Dimensioned drawing

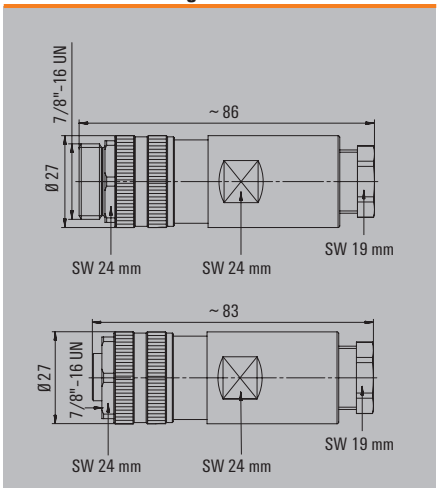


## Dimensioned drawing

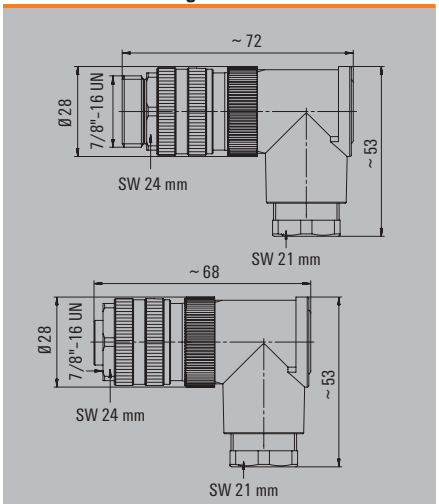


Torque, see E.12

## 7/8"

**Mounts behind wall**

## Ordering data

| Male | | Type | QTY | Order No. |
|---|---|---|---|---|
| | 3-pole | SAIE-7/8"S-3-0.2U-H | 1 | 1292350000 |
| | 4-pole | SAIE-7/8"S-4-0.2U-H | 1 | 1292420000 |
| | 5-pole | SAIE-7/8"S-5-0.2U-H | 1 | 1292490000 |
| **Socket** | | | | |
| | 3-pole | SAIE-7/8"B-3-0.2U-H | 1 | 1292390000 |
| | 4-pole | SAIE-7/8"B-4-0.2U-H | 1 | 1292450000 |
| | 5-pole | SAIE-7/8"B-5-0.2U-H | 1 | 1292520000 |
| **Note** | | | | |

## Technical data

| | |
|---|---|
| Housing main material | Zinc diecast, nickel-plated |
| Contact tube diameter | 7/8" |
| Core cross-section | 0.75 mm² |
| Rated current | 8A (4- and 5-pole), 10A (3-pole) |
| Rated voltage | 300 V |
| Temperature range of housing | -25...+85 °C |
| Protection degree | IP 67 |
| Contact surface | Gold-plated |
| Contact material | CuZn |
| Plugging cycles | ≥ 100 |
| **Note** | |

## Dimensioned drawing

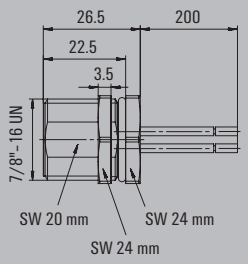

## 7/8"

**PG 11**

## Ordering data

| Male | | Type | QTY | Order No. |
|---|---|---|---|---|
| | 3-pole | SAIE-7/8"S-3-0.2U-PG11 | 1 | 1292330000 |
| | 4-pole | SAIE-7/8"S-4-0.2U-PG11 | 1 | 1292400000 |
| | 5-pole | SAIE-7/8"S-5-0.2-PG11 | 1 | 1292470000 |
| **Socket** | | | | |
| | 3-pole | SAIE-7/8"B-3-0.2U-PG11 | 1 | 1292370000 |
| | 4-pole | SAIE-7/8"B-4-0.2U-PG11 | 1 | 1292430000 |
| | 5-pole | SAIE-7/8"B-5-0.2U-PG11 | 1 | 1292500000 |
| **Note** | | | | |

## Technical data

| | |
|---|---|
| Housing main material | Zinc diecast, nickel-plated |
| Contact tube diameter | 7/8" |
| Core cross-section | 0.75 mm² |
| Rated current | 8A (4- and 5-pole), 10A (3-pole) |
| Rated voltage | 300 V |
| Temperature range of housing | -25...+85 °C |
| Protection degree | IP 67 |
| Contact surface | Gold-plated |
| Contact material | CuZn |
| Plugging cycles | ≥ 100 |
| **Note** | |

## Dimensioned drawing

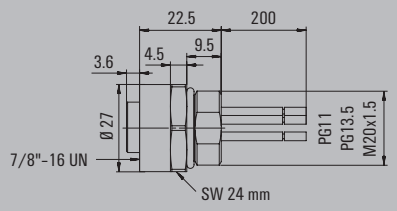

## 7/8"

**PG 13.5**

## Ordering data

| Male | | Type | QTY | Order No. |
|---|---|---|---|---|
| | 3-pole | SAIE-7/8"S-3-0.2U-PG13.5 | 1 | 1292340000 |
| | 4-pole | SAIE-7/8"S-4-0.2U-PG13.5 | 1 | 1292410000 |
| | 5-pole | SAIE-7/8"S-5-0.2U-PG13.5 | 1 | 1292480000 |
| **Socket** | | | | |
| | 3-pole | SAIE-7/8"B-3-0.2U-PG13.5 | 1 | 1292380000 |
| | 4-pole | SAIE-7/8"B-4-0.2U-PG13.5 | 1 | 1292440000 |
| | 5-pole | SAIE-7/8"B-5-0.2U-PG13.5 | 1 | 1292510000 |
| **Note** | | | | |

## Technical data

| | |
|---|---|
| Housing main material | Zinc diecast, nickel-plated |
| Contact tube diameter | 7/8" |
| Core cross-section | 0.75 mm² |
| Rated current | 8A (4- and 5-pole), 10A (3-pole) |
| Rated voltage | 300 V |
| Temperature range of housing | -25...+85 °C |
| Protection degree | IP 67 |
| Contact surface | Gold-plated |
| Contact material | CuZn |
| Plugging cycles | ≥ 100 |
| **Note** | |

## Dimensioned drawing

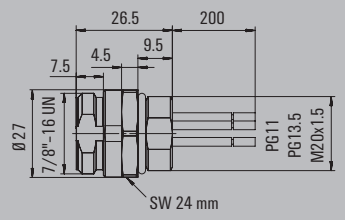

## 7/8" one end without connector

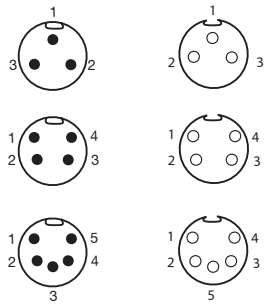

### Ordering data

| | 3-pole | 4-pole | 5-pole |
|---|---|---|---|
| **Male, straight** | | | |
| 1.5 m | SAIL-7/8"G-3-1.5U **1292080150** | SAIL-7/8"G-4-1.5U **1292120150** | SAIL-7/8"G-5-1.5U **1292170150** |
| **Male, angled** | | | |
| 1.5 m | SAIL-7/8"W-3-1.5U **1292090150** | SAIL-7/8"W-4-1.5U **1292130150** | SAIL-7/8"W-5-1.5U **1292180150** |
| **Female, straight** | | | |
| 1.5 m | SAIL-7/8"BG-3-1.5U **1292100150** | SAIL-7/8"BG-4-1.5U **1292140150** | SAIL-7/8"BG-5-1.5U **1292190150** |
| **Female, angled** | | | |
| 1.5 m | SAIL-7/8"BW-3-1.5U **1292110150** | SAIL-7/8"BW-4-1.5U **1292150150** | SAIL-7/8"BW-5-1.5U **1292200150** |
| **Note** | | | |

### Standard cable lengths

| | | |
|---|---|---|
| All cables listed in the ordering data have a length of 1.5 metres. The last four ordering digits must be changed when ordering other standard cable lengths. | 1.5 m | xxxxxx0150 |
| | 3.0 m | xxxxxx0300 |
| | 5.0 m | xxxxxx0500 |
| | 10.0 m | xxxxxx1000 |

### Technical data

| | |
|---|---|
| Rated current / Rated voltage | 9 A (4- and 5-pole) / 12 A (3-pole) / 300 V |
| Protection degree | IP 67, IP 68 |
| Core cross-section | 1.5 mm² |
| Contact surface / Contact material | Ni/Au / CuZn |
| Housing main material | PUR |
| Sheathing colour | black (similar to RAL 9005) |
| Temperature range of housing | -25...+85 °C |
| Plugging cycles | ≥ 100 |
| Pollution severity | 3 |

### Dimensioned drawing

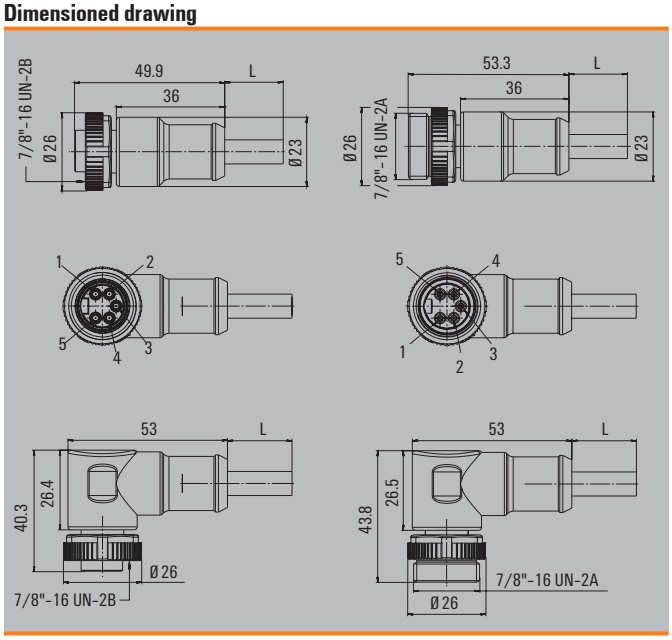

# Torques and spanner sizes

## Torques and distances across flats of the cable gland

The following values for strain relief apply to plug-in connectors with strain relief

| Cable Ø | Min. cable pull strength | Recommended torque of the clamping screw |
|---|---|---|
| 2 - 3 | min. 20 N | 0.3 - 0.4 Nm |
| 3 - 4 | min. 30 N | 0.3 - 0.4 Nm |
| 4 - 5 | min. 40 N | 0.8 - 1.0 Nm |
| 5 - 6 | min. 50 N | 0.8 - 1.0 Nm |
| 6 - 7 | min. 60 N | 0.8 - 1.0 Nm |
| 7 - 8 | min. 70 N | 0.8 - 1.0 Nm |
| 8 - 12 | min. 80 N | 1.0 - 1.4 Nm |
| 12 - 14 | min. 120 N | 1.0 - 1.4 Nm |

**Note:** Torque of the: 7/8" plug-in connector: 1.5 Nm (spanner size: 24)
M 2.5 Threaded bolt: 0.4 Nm

# IP 67 Remote I/O system SAI Active


| | | |
|---|---|---|
| **IP 67 Remote I/O system SAI Active** | Introduction | F.2 |
| | Quick select – SAI Active | F.4 |
| | SAI Active Universal - Overview | F.6 |
| | SAI Active Universal - PROFIBUS-DP | F.8 |
| | SAI Active Universal - CANopen | F.12 |
| | SAI Active Universal - DeviceNet™ | F.16 |
| | SAI Active Universal Pro - Overview | F.20 |
| | SAI Active Universal Pro | F.22 |
| | SAI Active Universal Wireless - Overview | F.34 |
| | SAI Active Universal Wireless | F.36 |

# Sensor Actuator Interface (SAI Active)

**Decentralised Remote I/O system with IP 67 protection**

Industrial automation solutions are becoming more and more decentralised. The Weidmüller sensor-actuator distributor SAI Active provides a fieldbus interface for digital communication. It is capable of merging all types of signals from the field and transmitting them without interference to the central controller unit. The SAI Active Remote I/O system is available in several variants to support different applications. A wide range of products for industrial automation are available to the user: the basic “SAI-AU” version provides a quick and simple, entry level solution for decentralisation; the professional “SAI-AU Pro” version has versatile extension options and functional modules; and the “SAI-AU Wireless” system provides a radio based solution.

The SAI Active Remote I/O system features IP 67 protection. It provides users with the opportunity to add input and/ or output units to the process in a decentralised manner directly on location. The wiring is uncomplicated with pre-assembled cables and standardised M8 and M12 connectors. This simplifies the installation process and reduces the risk of cabling errors. There is no need for complex parallel wiring of the sensors and actuators. Nor do you need to merge the cables together at a central location or electrical cabinet. The IP 67 modules have a sturdy construction and provide excellent reliability under adverse conditions involving dust, moisture, acids, high temperatures or vibrations.

In comparison to traditional passive solutions which require a separate line from the point of measurement to the controller for each signal, the active modules stand out because they need only one line to digitally transmit all the signals of a standard fieldbus system. The measurement signal is transmitted to the controller unit precisely (i.e., with no drift). Thus there is no need for manual calibration.

The SAI Active Remote I/O system is available for industrial fieldbus protocols (PROFIBUS-DP, DeviceNet™, CANopen, Modbus ASCII) and Ethernet protocols (Modbus TCP and Ethernet/IP). Standardised device drivers are available. They allow you to carry out a vendor-neutral integration into your engineering system without the use of any proprietary software. The drivers can also be used with a wide range of controller units. The diagnostic capabilities of the SAI Active system (available in part using a web browser) make troubleshooting simple. They also significantly reduce the time required for initial commissioning and maintenance. Each module provides a continual specific diagnostic function for each individual channel. When a sensor, actuator or module error is detected, an easily recognised signal is displayed with an arrow icon on the corresponding module. An alert is simultaneously sent on the fieldbus or directly to the controller unit. This allows the application to react quickly so that prompt system analysis can be carried out.

The SAI Active system offers many benefits including less expensive installation and maintenance. It also makes optimal use of space with its compact modules.

This system includes all purpose compact modules and modular subbus components – providing users with decentralised automation that they can profit from as a long term solution.

Weidmüller offers users a wide line of active and passive sensor-actuator distributors for designing a single vendor system. The distributors are versatile enough to be used for practically all industrial automation applications. Our product line is being constantly improved, expanded and adapted to meet future needs.

Use the following table for quickly finding the proper product. Plenty of documentation and software is available to support you during the project planning and initial commissioning phases. All software programs and corresponding product documentation can be downloaded free of charge from the Weidmüller web site.

## Quick select – SAI Active

### Selection table

| Order No. | Product designation | Connection system | | Communication | | | | | | | | |
|---|---|---|---|---|---|---|---|---|---|---|---|---|
| | | M8 | M12 | PROFIBUS DP | CANopen | DeviceNet™ | Modbus ASCII (RS 232 / USB) | Modbus TCP | Ethernet/IP | Subbus | Wireless | |
| | **SAI Active Universal** | | | | | | | | | | | |
| 1906550000 | SAI-AU M8 PB 16DI | X | | X | | | | | | | | |
| 1906640000 | SAI-AU M8 PB 16DI/8DO | X | | X | | | | | | | | |
| 1975450000 | SAI-AU M8 PB 8DI8DO 2A | X | | X | | | | | | | | |
| 1890020000 | SAI-AU M12 PB 16DI | | X | X | | | | | | | | |
| 1890010000 | SAI-AU M12 PB 16DI/8DO | | X | X | | | | | | | | |
| 1968220000 | SAI-AU M12 PB 8DI8DO 2A | | X | X | | | | | | | | |
| 1890000000 | SAI-AU M12 PB AI/AO/DI | | X | X | | | | | | | | |
| 1906680000 | SAI-AU M8 CAN 16DI | X | | | X | | | | | | | |
| 1906690000 | SAI-AU M8 CAN 16DI/8DO | X | | | X | | | | | | | |
| 1906650000 | SAI-AU M12 CAN 16DI | | X | | X | | | | | | | |
| 1906660000 | SAI AU M12 CAN 16DI/8DO | | X | | X | | | | | | | |
| 1906670000 | SAI-AU M12 CAN AI/AO/DI | | X | | X | | | | | | | |
| 1906730000 | SAI-AU M8 DN 16DI | X | | | | X | | | | | | |
| 1906740000 | SAI AU M8 DN 16DI/8DO | X | | | | X | | | | | | |
| 1906700000 | SAI-AU M12 DN 16DI | | X | | | X | | | | | | |
| 1906710000 | SAI AU M12 DN 16DI/8DO | | X | | | X | | | | | | |
| 1906720000 | SAI-AU M12 DN AI/AO/DI | | X | | | X | | | | | | |
| | **SAI Active Universal Pro** | | | | | | | | | | | |
| 1024310000 | SAI-AU M8 PB GW 16DI | X | | X | | | | | | X | | |
| 1938550000 | SAI-AU M12 PB GW 16DI | | X | X | | | | | | X | | |
| 1938570000 | SAI-AU M12 DN GW 16DI | | X | | | X | | | | X | | |
| 1962240000 | SAI-AU M12 USB GW 8I8O | | X | | | | X | | | X | | |
| 1938600000 | SAI-AU M8 SB 8DI | X | | | | | | | | X | | |
| 1938660000 | SAI-AU M8 SB 8DO 2A | X | | | | | | | | X | | |
| 1938630000 | SAI-AU M8 SB 8DIO | X | | | | | | | | X | | |
| 1938610000 | SAI-AU M12 SB 8DI | | X | | | | | | | X | | |
| 1938668000 | SAI-AU M12 SB 8DO 2A | | X | | | | | | | X | | |
| 1938640000 | SAI-AU M12 SB 8DIO | | X | | | | | | | X | | |
| 1938690000 | SAI-AU M12 SB 4AI | | X | | | | | | | X | | |
| 1938700000 | SAI-AU M12 SB 4AO | | X | | | | | | | X | | |
| 1938730000 | SAI-AU M12 SB 2Counter | | X | | | | | | | X | | |
| 1938720000 | SAI-AU M12 SB 4Thermo | | X | | | | | | | X | | |
| 1938710000 | SAI-AU M12 SB 4PT100 | | X | | | | | | | X | | |
| | **SAI Active Universal Wireless** | | | | | | | | | | | |
| 1006980000 | SAI-AU M12 GW PB/BT 12I | | X | X | | | | | | | X | |
| 1006940000 | SAI-AU M12 BT 16DI | | X | | | | | | | | X | |
| 1006930000 | SAI-AU M12 BT 16DI/8DO | | X | | | | | | | | X | |
| 1006920000 | SAI-AU M12 BT4AI2AO2DIO | | X | | | | | | | | X | |

| | Inputs | | | | | Outputs | | | | | | |
|---|---|---|---|---|---|---|---|---|---|---|---|---|
| | Digital | Analogue | Counter | TC | RTD | Digital | Output current | Analogue | Output range | Supply voltage feed circuits | Special characteristics | Page |
| | 16 | | | | | | | | | 2 | | F.8 |
| | max.. 16, min. 8 (can be configured) | | | | | max.. 8, min. 0 (can be configured) | 0.5 A | | | 4 | - Max. I/O channels = 16 | F.8 |
| | 8 | | | | | 8 | 2 A | | | 4 | - Max. total current, output = 8 A | F.8 |
| | 16 | | | | | | | | | 2 | | F.8 |
| | max. 16, min. 8 (can be configured) | | | | | max. 8, min. 0 (can be configured) | 0.5 A | | | 1 | - Max. I/O channels = 16 | F.8 |
| | 8 | | | | | 8 | 2 A | | | 2 | - Max. total current, output = 8 A | F.8 |
| | 4 | 4 | | | | | | 2 | -10...+10 V, 0...+10 V, 0...20 mA, 4...20 mA | 2 | | F.9 |
| | 16 | | | | | | | | | 2 | | F.12 |
| | max. 16, min. 8 (can be configured) | | | | | max. 8, min. 0 (can be configured) | 0.5 A | | | 4 | - Max. I/O channels = 16 | F.12 |
| | 16 | | | | | | | | | 2 | | F.12 |
| | max. 16, min. 8 (can be configured) | | | | | max. 8, min. 0 (can be configured) | 0.5 A | | | 4 | - Max. I/O channels = 16 | F.12 |
| | 4 | 4 | | | | | | 2 | -10...+10 V, 0...+10 V, 0...20 mA, 4...20 mA | 2 | | F.13 |
| | 16 | | | | | | | | | 2 | | F.16 |
| | max. 16, min. 8 (can be configured) | | | | | max. 8, min. 0 (can be configured) | 0.5 A | | | 4 | - Max. I/O channels = 16 | F.16 |
| | 16 | | | | | | | | | 2 | | F.16 |
| | max. 16, min. 8 (can be configured) | | | | | max. 8, min. 0 (can be configured) | 0.5 A | | | 4 | - Max. I/O channels = 16 | F.16 |
| | 4 | 4 | | | | | | 2 | -10...+10 V, 0...+10 V, 0...20 mA, 4...20 mA | 2 | | F.17 |
| | 16 | | | | | | | | | 2 | | F.22 |
| | 16 | | | | | | | | | 2 | | F.22 |
| | 16 | | | | | | | | | 2 | | F.24 |
| | 8 | | | | | 8 | 0.5 A | | | 2 | | F.26 |
| | 8 | | | | | | | | | | | F.28 |
| | | | | | | 8 | 2 A | | | 2 | - Max. total current, output = 8 A | F.28 |
| | max. 8, min. 0 (can be configured) | | | | | max. 8, min. 0 (can be configured) | 0.5 A | | | 2 | - Max. I/O channels = 8<br>- Max. total current, output = 4 A | F.28 |
| | 8 | | | | | | | | | | | F.28 |
| | | | | | | 8 | 2 A | | | 2 | - Max. I/O channels = 8<br>- Max. total current, output = 4 A | F.28 |
| | max. 8, min. 0 (can be configured) | | | | | max. 8, min. 0 (can be configured) | 0.5 A | | | 2 | - Max. I/O channels = 8 | F.28 |
| | | 4 | | | | | | | | | | F.29 |
| | | | | | | | | 4 | -10...+10 V, 0...+10 V, 0...20 mA, 4...20 mA | | | F.29 |
| | | | 2 | | | | | | | 2 | | F.30 |
| | | | | 4 | | | | | | | | F.31 |
| | | | | | 4 | | | | | | | F.32 |
| | 12 | | | | | | | | | 2 | | F.37 |
| | 16 | | | | | | | | | 2 | | F.37 |
| | max. 16, min. 8 (can be configured) | | | | | max. 8, min. 0 (can be configured) | 0.5 A | | | 4 | - Max. I/O channels = 16 | F.37 |
| | max. 4, min. 2 (can be configured) | 4 | | | | max. 2, min. 0 (can be configured) | 0.5 A | 2 | -10...+10 V, 0...+10 V, 0...20 mA, 4...20 mA | 2 | - Max. I/O channels = 10 | F.37 |

# SAI Active Universal

**Compact, basic versions of the Remote I/O system with IP 67 protection**

The SAI Active Universal consists of basic, compact designed variants that include a variety of modules for digital and analogue inputs and outputs. The housing has a sturdy construction in compliance with strict industrial requirements. It is resistant against aggressive materials, vibration, shock, temperature, water and dust.

The high quality connection system uses conventional, standardised M8 and M12 connectors with standard compliant coding. They ensure a reliable wiring process with less risk of errors. Two M12 connections for the fieldbus allow for a continuous bus installation without any additional T-distributor. The functional earth connection is automatically created when installing on a metallic earthed base.

## 4 independent voltage circuits

The modules can be supplied with up to four different voltage potentials. The module voltage can be simultaneously used for the inputs. In addition, up to three feed points are available for outputs; these can be switched off individually depending on the application requirements. Plug in cross connectors can be used to merge voltage potentials on the module.

## Efficient diagnostics and status alerts

The status of the I/Os is shown directly on the module using arrow icons. The arrows point to the label and the plug in position. Up to seven status LEDs are available for displaying additional information about the power supply, fieldbus status and group diagnostics. The information is simultaneously transmitted to the controller unit via the bus system.



## Freedom of choice

Total compliance with many industrial fieldbus standards: this permits integration with all conventional controllers so that the modules can be used in practically all applications. SAI Active Universal supports PROFIBUS-DP, CANopen, DeviceNet™ communication protocols.

## A wide variety of variants

All SAI Active modules with digital inputs or digital outputs are optionally available with standard M8 or M12 connection systems. For modules in the 16DI/8DO series, the configuration can be customised to fit the application so that anywhere between 16DI to 8DI/8DO can be used. Output cables with up to 2 A per channel are used to connect almost any load. Analogue modules can be configured flexibly for the current of voltage outputs.

## PROFIBUS-DP
## Remote I/O for digital signal processing

### SAI-AU

### SAI-AU

## Ordering data

| Module variants | Type | Qty. | Order No. | Type | Qty. | Order No. |
|---|---|---|---|---|---|---|
| 16 Digital In; 16 Digital In / 8 Digital Out | SAI-AU M8 PB 16DI | 1 | 1906550000 | SAI-AU M8 PB 16DI/8DO | 1 | 1906640000 |
| 16 Digital In; 16 Digital In / 8 Digital Out | SAI-AU M12 PB 16DI | 1 | 1890020000 | SAI-AU M12 PB 16DI/8DO | 1 | 1890010000 |
| 8 Digital In / 8 Digital Out | | | | SAI-AU M8 PB 8DI8DO 2A | 1 | 1975450000 |
| 8 Digital In / 8 Digital Out | | | | SAI-AU M12 PB 8DI8DO 2A | 1 | 1968220000 |
| **Note** | | | | | | |

## Technical data

| | | |
|---|---|---|
| **Connections** | | |
| Fieldbus (BUS-IN) | 1x M12 plug 5-pole, B-coded | 1x M12 plug 5-pole, B-coded |
| Fieldbus (BUS-OUT) | 1x M12 female 5-pole, B-coded | 1x M12 female 5-pole, B-coded |
| Supply voltage (AUX-IN) | 1x M12 plug 5-pole, A-coded | 2x M12 plug 5-pole, A-coded |
| Supply voltage (AUX-OUT) | 1x M12 female 5-pole, A-coded | |
| I/O connections | 16 x M8 socket 3-pole / 8 x M12 socket 5-pole, A-coded | 16 x M8 socket 3-pole / 8 x M12 socket 5-pole, A-coded |
| **Voltage supply** | | |
| Operating voltage | 24 V (18 V DC ... 30 V DC) | 24 V (18 V DC ... 30 V DC) |
| Contact load | Per PIN max. 4 A | Per PIN max. 4 A |
| Max. total current module | 10 A | 10 A |
| **Digital inputs** | | |
| Permitted input voltage | -30 V to +30 V (protected against polarity reversal) | -30 V to +30 V (protected against polarity reversal) |
| Input current, low | < 15 mA in accordance with EN 61131-2 Type 1 | < 15 mA in accordance with EN 61131-2 Type 1 |
| Input current, high | 2 mA to 15 mA in accordance with EN 61131-2 Type 1 | 2 mA to 15 mA in accordance with EN 61131-2 Type 1 |
| Input current, low | < 15 mA in accordance with EN 61131-2 Type 1 | < 15 mA in accordance with EN 61131-2 Type 1 |
| Input current, high | 2 mA to 15 mA in accordance with EN 61131-2 Type 1 | 2 mA to 15 mA in accordance with EN 61131-2 Type 1 |
| Input filter | 3 ms | 3 ms |
| **Digital outputs** | | |
| max. current-carrying capacity per output signal | | 0.5 A, 2 A |
| Switching frequency load (resistive / inductive / inrush) | | max. 100 Hz / max. 1 Hz / max. 8 Hz |
| Short-circuit-proof | | Yes, cut-off for short circuit and error message |
| Output voltage, low | | 0 V DC |
| Output voltage, high | | Supply voltage less 0.7 V DC |
| Max. total current of outputs | | 7 A, 8 A |
| **Fieldbus** | | |
| Bus system | Profibus-DP | Profibus-DP |
| Transmission rate | Max. 12 Mbit/s (automatic detection) | Max. 12 Mbit/s (automatic detection) |
| Addressing | Via rotary coding switch (1 – 126) | Via rotary coding switch (1 – 126) |
| System integration | GSD file (Device-specific for each module) | GSD file (Device-specific for each module) |
| **General data** | | |
| L x W x H | 210 mm / 54 mm / 32 mm | 210 mm / 54 mm / 32 mm |
| Earth | < 400 g | < 400 g |
| Protection degree | IP 67 | IP 67 |
| Operating temperature | 0 °C...+60 °C | 0 °C...+60 °C |
| Storage temperature | -25 °C...+85 °C | -25 °C...+85 °C |
| Housing main material / UL 94 flammability rating | Pocan, PBT / V-0 | Pocan, PBT / V-0 |
| Certificate | CE, cULus | CE, cULus |
| **Note** | | |

## PROFIBUS-DP
**Remote I/O for digital and analogue signal processing**

## SAI-AU

## Ordering data

| Module variants | Type | Qty. | Order No. |
|---|---|---|---|
| 4 Analogue In / 2 Analogue Out / 4 Digital In | SAI-AU M12 PB AI/AO/DI | 1 | 1890000000 |
| **Note** | | | |

## Technical data

| | |
|---|---|
| **Connections** | |
| Fieldbus (BUS-IN) | 1x M12 plug 5-pole, B-coded |
| Fieldbus (BUS-OUT) | 1x M12 female 5-pole, B-coded |
| Supply voltage (AUX-IN) | 1x M12 plug 5-pole, A-coded |
| Supply voltage (AUX-OUT) | 1x M12 female 5-pole, A-coded |
| I/O connections | 8 x M12 socket 5-pole, A-coded |
| **Voltage supply** | |
| Operating voltage | 24 V (18 V DC ... 30 V DC) |
| Contact load | Per PIN max. 4 A |
| Max. total current module | 10 A |
| **Digital inputs** | |
| Permitted input voltage | -30 V to +30 V (protected against polarity reversal) |
| Input current, low | < 15 mA in accordance with EN 61131-2 Type 1 |
| Input current, high | 2 mA to 15 mA in accordance with EN 61131-2 Type 1 |
| Input current, low | < 15 mA in accordance with EN 61131-2 Type 1 |
| Input current, high | 2 mA to 15 mA in accordance with EN 61131-2 Type 1 |
| Input filter | 3 ms |
| **Analogue inputs** | |
| Measurement range | -10 V ... +10 V, 0 V ... 10V, 0 ... 20 mA, 4...20 mA |
| Maximum input voltage in relation to GND | 35 V |
| Input resistance (load) | <125 Ohm |
| Max. input current (differential) | -50 mA to +50 mA (protected against polarity reversal) |
| Short-circuit-proof | Yes |
| Resolution / Accuracy | 12-bit / < 0.2 % |
| **Analogue outputs** | |
| Measurement range | -10 V ... +10 V, 0 V ... 10V, 0 ... 20 mA, 4...20 mA |
| Output interval | 5 ms to 250 ms (can be configured) |
| Short-circuit-proof | Yes |
| Resolution / Accuracy | 12-bit / < 0.2 % |
| **Fieldbus** | |
| Bus system | Profibus-DP |
| Transmission rate | Max. 12 Mbit/s (automatic detection) |
| Addressing | Via rotary coding switch (1 – 126) |
| System integration | GSD file (Device-specific for each module) |
| **General data** | |
| L x W x H | 210 mm / 54 mm / 32 mm |
| Earth | < 400 g |
| Protection degree | IP 67 |
| Operating temperature | 0 °C...+60 °C |
| Storage temperature | -25 °C...+85 °C |
| Housing main material / UL 94 flammability rating | Pocan, PBT / V-0 |
| Certificate | CE, cULus |

| Note | |
|---|---|

# Engineering tables for PROFIBUS

When planning the automation of a facility, you must have a wide variety of components available.
These engineering tables list all the components required for wiring up the SAI Active modules.

## PROFIBUS modules

## PROFIBUS accessories

## Sensor/actuator accessories

## Markers

## Protective caps

## Ordering data

| Description | Type | Qty. | Order No. |
|---|---|---|---|
| **PROFIBUS modules** | | | |
| 16 Digital In | SAI-AU M12 PB 16DI | 1 | **1890020000** |
| 16 Digital In / 8 Digital Out | SAI-AU M12 PB 16DI/8DO | 1 | **1890010000** |
| 4 Analogue In / 2 Analogue Out / 4 Digital In | SAI-AU M12 PB AI/AO/DI | 1 | **1890000000** |
| 8 Digital In / 8 Digital Out | SAI-AU M12 PB 8DI/8DO 2A | 1 | **1968220000** |
| 16 Digital In | SAI-AU M8 PB 16DI | 1 | **1906550000** |
| 16 Digital In / 8 Digital Out | SAI-AU M8 PB 16DI/8DO | 1 | **1906640000** |
| 8 Digital In / 8 Digital Out | SAI-AU M8 PB 8DI/8DO 2A | 1 | **1975450000** |
| **PROFIBUS accessories** | | | |
| PROFIBUS cables with female plug and male plug | | | Chapter C |
| PROFIBUS cables with female plug and other side open | | | Chapter C |
| PROFIBUS cables with male plug and other side open | | | Chapter C |
| PROFIBUS plug-in connector | | | Chapter C |
| PROFIBUS terminating resistor | SAIEND PB M12 5P B-COD | 1 | **1784770000** |
| **Sensor/actuator accessories** | | | |
| Sensor-actuator cables | | | Chapter B |
| Sensor-actuator plugs | | | Chapter D |
| **Markers** | | | |
| Semi-transparent markers for PrintJet printing | ESG 8/13.5/43.3 SAI AU | 5 | **1912130000** |
| **Protective caps** | | | |
| M8 Dust cap (Sensor connections) | SAI-SK M8 | 50 | **1802760000** |
| M12 Dust cap (Sensor connections) | SAI-SK | 30 | **9456050000** |
| M12 Dust cap (Bus-out and power-out) | SAI-SK-M12-UNI | 20 | **2330260000** |
| M12 Dust cap (Bus-in and power-in) | SAI-SK plug M12 | 50 | **1781520000** |

## CANopen
## Remote I/O for digital signal processing

CANopen

### SAI-AU

### SAI-AU

## Ordering data

| Module variants | Type | QTY | Order No. | Type | QTY | Order No. |
|---|---|---|---|---|---|---|
| 16 Digital In; 16 Digital In / 8 Digital Out | SAI-AU M8 CAN 16DI | 1 | 1906680000 | SAI-AU M8 CAN 16DI/8DO | 1 | 1906690000 |
| 16 Digital In; 16 Digital In / 8 Digital Out | SAI-AU M12 CAN 16DI | 1 | 1906650000 | SAI-AU M12 CAN 16DI/8DO | 1 | 1906660000 |
| Note | | | | | | |

## Technical data

| | | |
|---|---|---|
| **Connections** | | |
| Fieldbus (BUS-IN) | 1x M12 plug 5-pole, A-coded | 1x M12 plug 5-pole, A-coded |
| Fieldbus (BUS-OUT) | 1x M12 female 5-pole, A-coded | 1x M12 female 5-pole, A-coded |
| Supply voltage (AUX-IN) | 1x M12 plug 5-pole, A-coded | 2x M12 plug 5-pole, A-coded |
| Supply voltage (AUX-OUT) | 1x M12 female 5-pole, A-coded | |
| I/O connections | 16 x M8 socket 3-pole / 8 x M12 socket 5-pole, A-coded | 16 x M8 socket 3-pole / 8 x M12 socket 5-pole, A-coded |
| **Voltage supply** | | |
| Operating voltage | 24 V (18 V DC ... 30 V DC) | 24 V (18 V DC ... 30 V DC) |
| Contact load | Per PIN max. 4 A | Per PIN max. 4 A |
| Max. total current module | 8 A | 8 A |
| **Digital inputs** | | |
| Permitted input voltage | -30 V to +30 V (protected against polarity reversal) | -30 V to +30 V (protected against polarity reversal) |
| Input current, low | < 15 mA in accordance with EN 61131-2 Type 1 | < 15 mA in accordance with EN 61131-2 Type 1 |
| Input current, high | 2 mA to 15 mA in accordance with EN 61131-2 Type 1 | 2 mA to 15 mA in accordance with EN 61131-2 Type 1 |
| Input current, low | < 15 mA in accordance with EN 61131-2 Type 1 | < 15 mA in accordance with EN 61131-2 Type 1 |
| Input current, high | 2 mA to 15 mA in accordance with EN 61131-2 Type 1 | 2 mA to 15 mA in accordance with EN 61131-2 Type 1 |
| Input filter | 3 ms | 3 ms |
| **Digital outputs** | | |
| max. current-carrying capacity per output signal | | 0.5 A, 2 A |
| Switching frequency load (resistive / inductive / inrush) | | max. 100 Hz / max. 1 Hz / max. 8 Hz |
| Short-circuit-proof | | Yes, cut-off for short circuit and error message |
| Output voltage, low | | 0 V DC |
| Output voltage, high | | Supply voltage less 0.7 V DC |
| Max. total current of outputs | | 7 A, 8 A |
| **Fieldbus** | | |
| Bus system | CANopen | CANopen |
| Transmission rate | Max. 1 Mbit/s (automatic detection) | Max. 1 Mbit/s (automatic detection) |
| Addressing | Via rotary coding switch (1 – 127) | Via rotary coding switch (1 – 127) |
| System integration | EDS file (Device-specific for each module) | EDS file (Device-specific for each module) |
| **General data** | | |
| L x W x H | 210 mm / 54 mm / 32 mm | 210 mm / 54 mm / 32 mm |
| Earth | < 400 g | < 400 g |
| Protection degree | IP 67 | IP 67 |
| Operating temperature | 0 °C...+60 °C | 0 °C...+60 °C |
| Storage temperature | -25 °C...+85 °C | -25 °C...+85 °C |
| Housing main material / UL 94 flammability rating | Pocan, PBT / V-0 | Pocan, PBT / V-0 |
| Certificate | CE, cULus | CE, cULus |

Note

**CANopen**
**Remote I/O for digital and analogue signal processing**

## SAI-AU

## Ordering data

| Module variants | Type | QTY | Order No. |
|---|---|---|---|
| 4 Analogue In / 2 Analogue Out / 4 Digital In | SAI-AU M12 CAN AI/AO/DI | 1 | 1906670000 |
| Note | | | |

## Technical data

| | |
|---|---|
| **Connections** | |
| Fieldbus (BUS-IN) | 1x M12 plug 5-pole, A-coded |
| Fieldbus (BUS-OUT) | 1x M12 female 5-pole, A-coded |
| Supply voltage (AUX-IN) | 1x M12 plug 5-pole, A-coded |
| Supply voltage (AUX-OUT) | 1x M12 female 5-pole, A-coded |
| I/O connections | |
| **Voltage supply** | |
| Operating voltage | 24 V (18 V DC ... 30 V DC) |
| Contact load | Per PIN max. 4 A |
| Max. total current module | 8 A |
| **Digital inputs** | |
| Permitted input voltage | -30 V to +30 V (protected against polarity reversal) |
| Input current, low | < 15 mA in accordance with EN 61131-2 Type 1 |
| Input current, high | 2 mA to 15 mA in accordance with EN 61131-2 Type 1 |
| Input current, low | < 15 mA in accordance with EN 61131-2 Type 1 |
| Input current, high | 2 mA to 15 mA in accordance with EN 61131-2 Type 1 |
| Input filter | 3 ms |
| **Digital outputs** | |
| max. current-carrying capacity per output signal | |
| Switching frequency load (resistive / inductive / inrush) | |
| Short-circuit-proof | |
| Output voltage, low | |
| Output voltage, high | |
| Max. total current of outputs | |
| **Fieldbus** | |
| Bus system | CANopen |
| Transmission rate | Max. 1 Mbit/s (automatic detection) |
| Addressing | Via rotary coding switch (1 – 127) |
| System integration | EDS file (Device-specific for each module) |
| **General data** | |
| L x W x H | 210 mm / 54 mm / 32 mm |
| Earth | < 400 g |
| Protection degree | IP 67 |
| Operating temperature | 0 °C...+60 °C |
| Storage temperature | -25 °C...+85 °C |
| Housing main material / UL 94 flammability rating | Pocan, PBT / V-0 |
| Certificate | CE, cULus |

| Note | |
|---|---|

# Engineering tables for CANopen

When planning the automation of a facility, you must have a wide variety of components available.
These engineering tables list all the components required for wiring up the SAI Active modules.

## CANopen modules

## CANopen accessories

## Sensor/actuator accessories

## Markers

## Protective caps

## Ordering data

| Description | Type | Qty. | Order No. |
|---|---|---|---|
| **CANopen modules** | | | |
| 16 Digital In | SAI-AU M12 CAN 16DI | 1 | **1906650000** |
| 16 Digital In / 8 Digital Out | SAI AU M12 CAN 16DI/8DO | 1 | **1906660000** |
| 4 Analogue In / 2 Analogue Out / 4 Digital In | SAI-AU M12 CAN AI/AO/DI | 1 | **1906670000** |
| 16 Digital In | SAI-AU M8 CAN 16DI | 1 | **1906680000** |
| 16 Digital In / 8 Digital Out | SAI-AU M8 CAN 16DI/8DO | 1 | **1906690000** |
| **CANopen accessories** | | | |
| CANopen cables with female plug and male plug | | | Chapter C |
| CANopen cables with female plug and other side open | | | Chapter C |
| CANopen cables with male plug and other side open | | | Chapter C |
| CANopen plug-in connector | | | Chapter C |
| CANopen terminating resistor | SAIEND CAN-M12 5P A-COD | 1 | **1784760000** |
| **Sensor/actuator accessories** | | | |
| Sensor-actuator cables | | | Chapter B |
| Sensor-actuator plugs | | | Chapter D |
| **Markers** | | | |
| Semi-transparent markers for PrintJet printing | ESG 8/13.5/43.3 SAI AU | 5 | **1912130000** |
| **Protective caps** | | | |
| M8 Dust cap (Sensor connections) | SAI-SK M8 | 50 | **1802760000** |
| M12 Dust cap (Sensor connections) | SAI-SK | 30 | **9456050000** |
| M12 Dust cap (Bus-out and power-out) | SAI-SK-M12-UNI | 20 | **2330260000** |
| M12 Dust cap (Bus-in and power-in) | SAI-SK plug M12 | 50 | **1781520000** |

## DeviceNet™
## Remote I/O for digital signal processing

### SAI-AU

### SAI-AU

## Ordering data

| Module variants | Type | Qty. | Order No. | Type | Qty. | Order No. |
|---|---|---|---|---|---|---|
| 16 Digital In; 16 Digital In / 8 Digital Out | SAI-AU M8 DN 16DI | 1 | 1906730000 | SAI-AU M8 DN 16DI/8DO | 1 | 1906740000 |
| 16 Digital In; 16 Digital In / 8 Digital Out | SAI-AU M12 DN 16DI | 1 | 1906700000 | SAI-AU M12 DN 16DI/8DO | 1 | 1906710000 |
| Note | | | | | | |

## Technical data

| | | |
|---|---|---|
| **Connections** | | |
| Fieldbus (BUS-IN) | 1x M12 plug 5-pole, A-coded | 1x M12 plug 5-pole, A-coded |
| Fieldbus (BUS-OUT) | 1x M12 female 5-pole, A-coded | 1x M12 female 5-pole, A-coded |
| Supply voltage (AUX-IN) | 1x M12 plug 5-pole, A-coded | 2x M12 plug 5-pole, A-coded |
| Supply voltage (AUX-OUT) | 1x M12 female 5-pole, A-coded | |
| I/O connections | 16 x M8 socket 3-pole / 8 x M12 socket 5-pole, A-coded | 16 x M8 socket 3-pole / 8 x M12 socket 5-pole, A-coded |
| **Voltage supply** | | |
| Operating voltage | 24 V (18 V DC ... 30 V DC) | 24 V (18 V DC ... 30 V DC) |
| Contact load | Per PIN max. 4 A | Per PIN max. 4 A |
| Max. total current module | 8 A | 8 A |
| **Digital inputs** | | |
| Permitted input voltage | -30 V to +30 V (protected against polarity reversal) | -30 V to +30 V (protected against polarity reversal) |
| Input current, low | < 15 mA in accordance with EN 61131-2 Type 1 | < 15 mA in accordance with EN 61131-2 Type 1 |
| Input current, high | 2 mA to 15 mA in accordance with EN 61131-2 Type 1 | 2 mA to 15 mA in accordance with EN 61131-2 Type 1 |
| Input current, low | < 15 mA in accordance with EN 61131-2 Type 1 | < 15 mA in accordance with EN 61131-2 Type 1 |
| Input current, high | 2 mA to 15 mA in accordance with EN 61131-2 Type 1 | 2 mA to 15 mA in accordance with EN 61131-2 Type 1 |
| Input filter | 3 ms | 3 ms |
| **Digital outputs** | | |
| max. current-carrying capacity per output signal | | 0.5 A, 2 A |
| Switching frequency load (resistive / inductive / inrush) | | max. 100 Hz / max. 1 Hz / max. 8 Hz |
| Short-circuit-proof | | Yes, cut-off for short circuit and error message |
| Output voltage, low | | 0 V DC |
| Output voltage, high | | Supply voltage less 0.7 V DC |
| Max. total current outputs | | 7 A |
| **Fieldbus** | | |
| Bus system | DeviceNet™ | DeviceNet™ |
| Transmission rate | Max. 500 kBit/s (automatic detection) | Max. 500 kBit/s (automatic detection) |
| Addressing | Via rotary coding switch (0 – 63) | Via rotary coding switch (0 – 63) |
| System integration | EDS file (Device-specific for each module) | EDS file (Device-specific for each module) |
| **General data** | | |
| L x W x H | 210 mm / 54 mm / 32 mm | 210 mm / 54 mm / 32 mm |
| Earth | < 400 g | < 400 g |
| Protection degree | IP 67 | IP 67 |
| Operating temperature | 0 °C...+60 °C | 0 °C...+60 °C |
| Storage temperature | -25 °C...+85 °C | -25 °C...+85 °C |
| Housing main material / UL 94 flammability rating | Pocan, PBT / V-0 | Pocan, PBT / V-0 |
| Certificate | CE, cULus | CE, cULus |

Note

**DeviceNet™**
**Remote I/O for digital and analogue signal processing**

## SAI-AU

## Ordering data

| Module variants | |
|---|---|
| | 4 Analogue In / 2 Analogue Out / 4 Digital In |
| **Note** | |

| Type | Qty. | Order No. |
|---|---|---|
| SAI-AU M12 DN AI/AO/DI | 1 | 1906720000 |

## Technical data

| | |
|---|---|
| **Connections** | |
| Fieldbus (BUS-IN) | 1x M12 plug 5-pole, A-coded |
| Fieldbus (BUS-OUT) | 1x M12 female 5-pole, A-coded |
| Supply voltage (AUX-IN) | 1x M12 plug 5-pole, A-coded |
| Supply voltage (AUX-OUT) | 1x M12 female 5-pole, A-coded |
| I/O connections | 8 x M12 socket 5-pole, A-coded |
| **Voltage supply** | |
| Operating voltage | 24 V (18 V DC ... 30 V DC) |
| Contact load | Per PIN max. 4 A |
| Max. total current module | 8 A |
| **Digital inputs** | |
| Permitted input voltage | -30 V to +30 V (protected against polarity reversal) |
| Input current, low | < 15 mA in accordance with EN 61131-2 Type 1 |
| Input current, high | 2 mA to 15 mA in accordance with EN 61131-2 Type 1 |
| Input current, low | < 15 mA in accordance with EN 61131-2 Type 1 |
| Input current, high | 2 mA to 15 mA in accordance with EN 61131-2 Type 1 |
| Input filter | 3 ms |
| **Analogue inputs** | |
| Measurement range | -10 V ... +10 V, 0 V ... 10 V, 0 ... 20 mA, 4...20 mA |
| Maximum input voltage in relation to GND | 35 V |
| Input resistance (load) | <125 Ohm |
| Max. input current (differential) | -50 mA to +50 mA (protected against polarity reversal) |
| Short-circuit-proof | Yes |
| Resolution / Accuracy | 12-bit / < 0.2 % |
| **Analogue outputs** | |
| Measurement range | -10 V ... +10 V, 0 V ... 10 V, 0 ... 20 mA, 4...20 mA |
| Output interval | 5 ms to 250 ms (can be configured) |
| Short-circuit-proof | Yes |
| Resolution / Accuracy | 12-bit / < 0.2 % |
| **Fieldbus** | |
| Bus system | DeviceNet™ |
| Transmission rate | Max. 500 kBit/s (automatic detection) |
| Addressing | Via rotary coding switch (0 – 63) |
| System integration | EDS file (Device-specific for each module) |
| **General data** | |
| L x W x H | 210 mm / 54 mm / 32 mm |
| Earth | < 400 g |
| Protection degree | IP 67 |
| Operating temperature | 0 °C...+60 °C |
| Storage temperature | -25 °C...+85 °C |
| Housing main material / UL 94 flammability rating | Pocan, PBT / V-0 |
| Certificate | CE, cULus |

**Note**

# Engineering tables for DeviceNet™

When planning the automation of a facility, you must have a wide variety of components available.
These engineering tables list all the components required for wiring up the SAI Active modules.

## DeviceNet™ modules

## DeviceNet™ accessories

## Sensor/actuator accessories

## Markers

## Protective caps

## Ordering data

| Description | Type | Qty. | Order No. |
|---|---|---|---|
| **DeviceNet™ modules** | | | |
| 16 Digital In | SAI-AU M12 DN 16DI | 1 | **1906700000** |
| 16 Digital In / 8 Digital Out | SAI-AU M12 DN 16DI/8DO | 1 | **1906710000** |
| 4 Analogue In / 2 Analogue Out / 4 Digital In | SAI-AU M12 DN AI/AO/DI | 1 | **1906720000** |
| 16 Digital In | SAI-AU M8 DN 16DI | 1 | **1906730000** |
| 16 Digital In / 8 Digital Out | SAI-AU M8 DN 16DI/8DO | 1 | **1906740000** |
| **DeviceNet™ accessories** | | | |
| DeviceNet™ cables with female plug and male plug | | | Chapter C |
| DeviceNet™ cables with female plug and other side open | | | Chapter C |
| DeviceNet™ cables with male plug and other side open | | | Chapter C |
| DeviceNet™ plug-in connector | | | Chapter C |
| DeviceNet™ terminating resistor | SAIEND CAN-M12 5P A-COD | 1 | **1784760000** |
| **Sensor/actuator accessories** | | | |
| Sensor-actuator cables | | | Chapter B |
| Sensor-actuator plugs | | | Chapter D |
| **Markers** | | | |
| Semi-transparent markers for PrintJet printing | ESG 8/13.5/43.3 SAI AU | 5 | **1912130000** |
| **Protective caps** | | | |
| M8 Dust cap (Sensor connections) | SAI-SK M8 | 50 | **1802760000** |
| M12 Dust cap (Sensor connections) | SAI-SK | 30 | **9456050000** |
| M12 Dust cap (Bus-out and power-out) | SAI-SK-M12-UNI | 20 | **2330260000** |
| M12 Dust cap (Bus-in and power-in) | SAI-SK plug M12 | 50 | **1781520000** |

# SAI Active Universal Pro

**Professional versions of the Remote I/O System featuring IP 67 protection**

The modules in the SAI Active Universal Pro systems provide additional I/O and functional modules for more versatile topologies. The extension modules come in a compact, space-saving design. They can also be mounted on the side because of the additional drilled holes in the side of the housing. Up to 15 extension modules can be connected over a distance of 50 metres using a shielded, standard M8 sensor cable and the SAI fieldbus module.

In addition to the digital input and output modules, we also offer counter unit modules, thermal modules, RTD modules and analogue modules. The digital input and output modules are also available in M8 and M12 variants. The analogue modules and functional modules are available with M12 connections. Markers are included with every SAI Active module for labelling the I/O channels and the entire device. These markers can be printed on using the PrintJet system from Weidmüller.



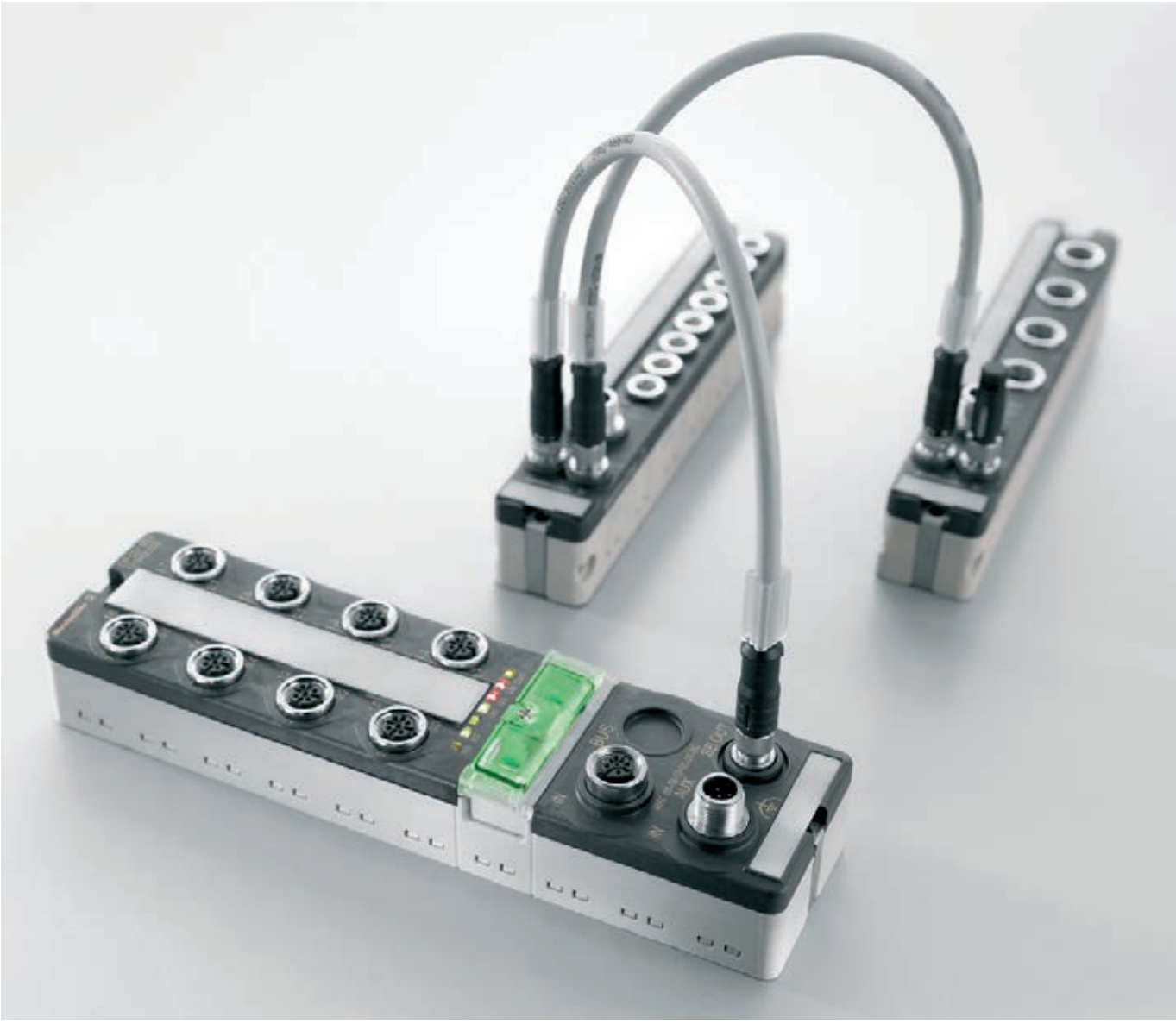

## Cost-effective Subbus system

Subbus modules are wired up using conventional, shielded, standard M8 sensor cables. Thus there is no need for expensive custom cables. The extension modules enable versatile expansion and minimise the costs associated with the fieldbus interface. The modules do not, however, detract from the performance of the fieldbus system.

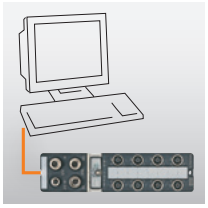

## Integration with an industrial PC

Weidmüller offers an SAI Active Universal Pro module with USB and RS232 interfaces especially for controllers or industrial PCs without any Fieldbus connection. A driver is used to set up the connection; communication is based on the standard Modbus ASCII format. All available extension modules can be used on these components and can be accessed via the controller.

## Simplified installation

The modules have a compact, space-saving design with additional holes drilled on the side of the housing:  this allows them to be installed in a quick and versatile manner. All SAI Active modules with digital inputs or digital outputs are optionally available with standard M8 or M12 connection systems. The outputs are short-circuit-proof and protected against polarity reversal.

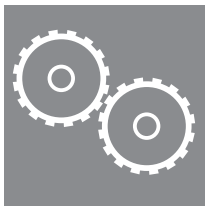

## Efficient engineering

All Pro-System modules are described in the standardised fieldbus specific device description files. They can be integrated into any controller unit and corresponding engineering system regardless of the particular manufacturer. The configuration (whether for the input, DESINA input, or output) is carried out without any additional software. Any user can configure directly from the engineering system.

## Gateway modules with digital inputs

### SAI-AU GW

### SAI-AU GW

## Ordering data

| Module variants | Type | Qty. | Order No. | Type | Qty. | Order No. |
|---|---|---|---|---|---|---|
| 16 Digital In | SAI-AU M12 PB GW 16DI | 1 | 1938550000 | SAI-AU M8 PB GW 16DI | 1 | 1024310000 |
| **Note** | | | | | | |

## Technical data

| | | |
|---|---|---|
| **Connections** | | |
| Fieldbus (BUS-IN) | 1x M12 plug 5-pole, B-coded | 1x M12 plug 5-pole, B-coded |
| Fieldbus (BUS-OUT) | 1x M12 female 5-pole, B-coded | 1x M12 female 5-pole, B-coded |
| Supply voltage (AUX-IN) | 1x M12 plug 5-pole, A-coded | 1x M12 plug 5-pole, A-coded |
| Connection to Subbus (SUB-OUT) | 1 x M8 female 4-pole, A-coded | 1 x M8 female 4-pole, A-coded |
| I/O connections | 8 x M12 socket 5-pole, A-coded | 16x M8 female 3-pole |
| **Voltage supply** | | |
| Operating voltage | 24 V (18 V DC ... 30 V DC) | 24 V (18 V DC ... 30 V DC) |
| Contact load | Per PIN max. 4 A | Per PIN max. 4 A |
| Max. total current module | 8 A | 8 A |
| **Digital inputs** | | |
| Permitted input voltage | -30 V to +30 V (protected against polarity reversal) | -30 V to +30 V (protected against polarity reversal) |
| Input current, low | < 15 mA in accordance with EN 61131-2 Type 1 | < 15 mA in accordance with EN 61131-2 Type 1 |
| Input current, high | 2 mA to 15 mA in accordance with EN 61131-2 Type 1 | 2 mA to 15 mA in accordance with EN 61131-2 Type 1 |
| Input current, low | < 15 mA in accordance with EN 61131-2 Type 1 | < 15 mA in accordance with EN 61131-2 Type 1 |
| Input current, high | 2 mA to 15 mA in accordance with EN 61131-2 Type 1 | 2 mA to 15 mA in accordance with EN 61131-2 Type 1 |
| Input filter | 1 ms, 3 ms, 5 ms, 10 ms, Configurable | 1 ms, 3 ms, 5 ms, 10 ms, Configurable |
| **Fieldbus** | | |
| Bus system | Profibus-DP | Profibus-DP |
| Transmission rate | Max. 12 Mbit/s (automatic detection) | Max. 12 Mbit/s (automatic detection) |
| Addressing | Via rotary coding switch (1 – 126) | Via rotary coding switch (1 – 126) |
| System integration | GSD file | GSD file |
| **General data** | | |
| L x W x H | 210 mm / 54 mm / 32 mm | 210 mm / 54 mm / 32 mm |
| Earth | < 350 g | < 350 g |
| Protection degree | IP 67 | IP 67 |
| Operating temperature | 0 °C...+60 °C | 0 °C...+60 °C |
| Storage temperature | -25 °C...+85 °C | -25 °C...+85 °C |
| Housing main material / UL 94 flammability rating | Pocan, PBT / V-0 | Pocan, PBT / V-0 |
| Certificate | CE, cULus | CE, cULus |

| Note | | |
|---|---|---|

# Engineering tables for PROFIBUS

When planning the automation of a facility, you must have a wide variety of components available.
These engineering tables list all the components required for wiring up the SAI Active modules.

## PROFIBUS modules

## PROFIBUS accessories

## Subbus cables / terminating resistor

## Sensor/actuator accessories

## Markers

## Protective caps

## Ordering data

| Description | Type | Qty. | Order No. |
|---|---|---|---|
| **PROFIBUS modules** | | | |
| PROFIBUS Gateway M12 | SAI-AU M12 PB GW 16DI | 1 | **1938550000** |
| PROFIBUS Gateway M8 | SAI-AU M8 PB GW 16DI | 1 | **1024310000** |
| Subbus module | SAI-AU M12 SB 8DI | 1 | **1938610000** |
| Subbus module | SAI-AU M12 SB 8DI/8DO | 1 | **1938640000** |
| Subbus module | SAI-AU M8 SB 8DI | 1 | **1938600000** |
| Subbus module | SAI-AU M8 SB 8DI/8DO | 1 | **1938630000** |
| Subbus module | SAI-AU M12 SB AI | 1 | **1938690000** |
| Subbus module | SAI-AU M12 SB AO | 1 | **1938700000** |
| Subbus module | SAI-AU M12 SB PT100 | 1 | **1938710000** |
| Subbus module | SAI-AU M12 SB Thermo | 1 | **1938720000** |
| Subbus module | SAI-AU M12 SB Zähler | 1 | **1938730000** |
| Subbus module | SAI-AU M8 SB 8DO 2A | 1 | **1938660000** |
| Subbus module | SAI-AU M12 SB 8DO 2A | 1 | **1938680000** |
| **PROFIBUS accessories** | | | |
| PROFIBUS cables with female plug and male plug | | | Chapter C |
| PROFIBUS cables with female plug and other side open | | | Chapter C |
| PROFIBUS cables with male plug and other side open | | | Chapter C |
| PROFIBUS plug-in connector | | | Chapter C |
| PROFIBUS terminating resistor | SAIEND PB M12 5P B-COD | 1 | **1784770000** |
| **Subbus cables / Terminating resistor** | | | |
| Subbus cables | | | Chapter C |
| Subbus terminating resistor | SAIEND CAN M8 4P | 1 | **1955340000** |
| **Sensor/actuator accessories** | | | |
| Sensor-actuator cables | | | Chapter B |
| Sensor-actuator plugs | | | Chapter D |
| **Markers** | | | |
| Semi-transparent markers for PrintJet printing | ESG 8/13.5/43.3 SAI AU | 5 | **1912130000** |
| **Protective caps** | | | |
| M8 Dust cap (Sensor connections) | SAI-SK M8 | 50 | **1802760000** |
| M12 Dust cap (Sensor connections) | SAI-SK | 30 | **9456050000** |
| M12 Dust cap (Bus-out and power-out) | SAI-SK-M12-UNI | 20 | **2330260000** |
| M12 Dust cap (Bus-in and power-in) | SAI-SK plug M12 | 50 | **1781520000** |

## Gateway modules with digital inputs

### SAI-AU GW

## Ordering data

| Module variants | |
|---|---|
| | 16 Digital In |
| **Note** | |

| Type | Qty. | Order No. |
|---|---|---|
| SAI-AU M12 DN GW 16DI | 1 | 1938570000 |

## Technical data

| | |
|---|---|
| **Connections** | |
| Fieldbus (BUS-IN) | 1x M12 plug 5-pole, A-coded |
| Fieldbus (BUS-OUT) | 1x M12 female 5-pole, A-coded |
| Supply voltage (AUX-IN) | 1x M12 plug 5-pole, A-coded |
| Connection to Subbus (SUB-OUT) | 1 x M8 female 4-pole, A-coded |
| I/O connections | 8 x M12 socket 5-pole, A-coded |
| **Voltage supply** | |
| Operating voltage | 24 V (18 V DC ... 30 V DC) |
| Contact load | Per PIN max. 4 A |
| Max. total current module | 8 A |
| **Digital inputs** | |
| Permitted input voltage | -30 V to +30 V (protected against polarity reversal) |
| Input current, low | < 15 mA in accordance with EN 61131-2 Type 1 |
| Input current, high | 2 mA to 15 mA in accordance with EN 61131-2 Type 1 |
| Input current, low | < 15 mA in accordance with EN 61131-2 Type 1 |
| Input current, high | 2 mA to 15 mA in accordance with EN 61131-2 Type 1 |
| Input filter | 1 ms, 3 ms, 5 ms, 10 ms, Configurable |
| **Fieldbus** | |
| Bus system | DeviceNet |
| Transmission rate | Max. 500 kBit/s (automatic detection) |
| Addressing | Via rotary coding switch (0 – 63) |
| System integration | EDS file |
| **General data** | |
| L x W x H | 210 mm / 54 mm / 32 mm |
| Earth | < 350 g |
| Protection degree | IP 67 |
| Operating temperature | 0 °C...+60 °C |
| Storage temperature | -25 °C...+85 °C |
| Housing main material / UL 94 flammability rating | Pocan, PBT / V-0 |
| Certificate | CE, cULus |

**Note**

# Engineering table for DeviceNet™

When planning the automation of a facility, you must have a wide variety of components available.
These engineering tables list all the components required for wiring up the SAI Active modules.

## DeviceNet™ and EtherNet/IP™ modules

## DeviceNet™ and EtherNet/IP™ accessories

## Subbus cables / terminating resistor

## Sensor/actuator accessories

## Markers

## Protective caps

## Ordering data

| Description | Type | Qty. | Order No. |
|---|---|---|---|
| **DeviceNet™ and EthernetIP™ modules** | | | |
| DeviceNet™ Gateway | SAI-AU M12 DN GW 16DI | 1 | **1938570000** |
| Subbus module | SAI-AU M12 SB 8DI | 1 | **1938610000** |
| Subbus module | SAI-AU M12 SB 8DI/8DO | 1 | **1938640000** |
| Subbus module | SAI-AU M8 SB 8DI | 1 | **1938600000** |
| Subbus module | SAI-AU M8 SB 8DI/8DO | 1 | **1938630000** |
| Subbus module | SAI-AU M12 SB AI | 1 | **1938690000** |
| Subbus module | SAI-AU M12 SB AO | 1 | **1938700000** |
| Subbus module | SAI-AU M12 SB PT100 | 1 | **1938710000** |
| Subbus module | SAI-AU M12 SB Thermo | 1 | **1938720000** |
| Subbus module | SAI-AU M12 SB Zähler | 1 | **1938730000** |
| Subbus module | SAI-AU M8 SB 8DO 2A | 1 | **1938660000** |
| Subbus module | SAI-AU M12 SB 8DO 2A | 1 | **1938680000** |
| **DeviceNET™ and EthernetIP™ accessories** | | | |
| DeviceNet™ cables with female plug and male plug | | | Chapter C |
| DeviceNet™ cables with female plug and other side open | | | Chapter C |
| DeviceNet™ cables with male plug and other side open | | | Chapter C |
| DeviceNet™ plug-in connector | | | Chapter C |
| DeviceNet™ terminating resistor | SAIEND CAN-M12 5P A-COD | 1 | **1784760000** |
| **Subbus cables / Terminating resistor** | | | |
| Subbus cables | | | Chapter C |
| Subbus terminating resistor | SAIEND CAN M8 4P | 1 | **1955340000** |
| **Sensor/actuator accessories** | | | |
| Sensor-actuator cables | | | Chapter B |
| Sensor-actuator plugs | | | Chapter D |
| **Markers** | | | |
| Semi-transparent markers for PrintJet printing | ESG 8/13.5/43.3 SAI AU | 5 | **1912130000** |
| **Protective caps** | | | |
| M8 Dust cap (Sensor connections) | SAI-SK M8 | 50 | **1802760000** |
| M12 Dust cap (Sensor connections) | SAI-SK | 30 | **9456050000** |
| M12 Dust cap (Bus-out and power-out) | SAI-SK-M12-UNI | 20 | **2330260000** |
| M12 Dust cap (Bus-in and power-in) | SAI-SK plug M12 | 50 | **1781520000** |

## Gateway modules with digital inputs / outputs

### SAI-AU GW

## Ordering data

| Module variants | |
|---|---|
| | 16 Digital In; 8 Digital In / 8 Digital Out |
| **Note** | |

| Type | Qty. | Order No. |
|---|---|---|
| SAI-AU M12 USB GW 8I8O | 1 | 1962240000 |

## Technical data

| | |
|---|---|
| **Connections** | |
| Fieldbus (BUS-IN) | 1x M12 plug 5-pole, B-coded (BUS-USB) |
| Fieldbus (BUS-OUT) | 1x M12 female 5-pole, B-coded (BUS-RS232) |
| Supply voltage (AUX-IN) | 1x M12 plug 5-pole, A-coded |
| Connection to Subbus (SUB-OUT) | 1 x M8 female 4-pole, A-coded |
| I/O connections | 8 x M12 socket 5-pole, A-coded |
| **Voltage supply** | |
| Operating voltage | 24 V (18 V DC ... 30 V DC) |
| Contact load | Per PIN max. 4 A |
| Max. total current module | 8 A |
| **Digital inputs** | |
| Permitted input voltage | -30 V to +30 V (protected against polarity reversal) |
| Input current, low | < 15 mA in accordance with EN 61131-2 Type 1 |
| Input current, high | 2 mA to 15 mA in accordance with EN 61131-2 Type 1 |
| Input current, low | < 15 mA in accordance with EN 61131-2 Type 1 |
| Input current, high | 2 mA to 15 mA in accordance with EN 61131-2 Type 1 |
| Input filter | 1 ms, 3 ms, 5 ms, 10 ms, Configurable |
| **Digital outputs** | |
| max. current-carrying capacity per output signal | 0.5 A |
| Switching frequency load (resistive / inductive / inrush) | max. 100 Hz / max. 1 Hz / max. 8 Hz |
| Short-circuit-proof | Yes, cut-off for short circuit and error message |
| Output voltage, low | 0 V DC |
| Output voltage, high | Supply voltage less 0.7 V DC |
| Max. total current outputs | 4 A |
| **Fieldbus** | |
| Bus system | Modbus ASCII (RS 232 / USB) |
| Transmission rate | 115.2 kBit/s |
| Addressing | Static |
| System integration | Register |
| **General data** | |
| L x W x H | 210 mm / 54 mm / 32 mm |
| Earth | < 350 g |
| Protection degree | IP 67 |
| Operating temperature | 0 °C...+60 °C |
| Storage temperature | -20 °C... |
| Housing main material / UL 94 flammability rating | Pocan, PBT / V-0 |
| Certificate | CE, cULus |

**Note**

# Engineering tables for Modbus ASCII via RS232 or USB

When planning the automation of a facility, you must have a wide variety of components available.
These engineering tables list all the components required for wiring up the SAI Active modules.

## Modbus ASCII and USB modules

## Modbus ASCII and USB accessories

## Subbus cables / terminating resistor

## Sensor/actuator accessories

## Markers

## Protective caps

## Ordering data

| Description | Type | Qty. | Order No. |
|---|---|---|---|
| **Modbus ASCII and USB modules** | | | |
| USB Gateway | SAI-AU M12 USB GW 8I8O | 1 | **1962240000** |
| Subbus module | SAI-AU M12 SB 8DI | 1 | **1938610000** |
| Subbus module | SAI-AU M12 SB 8DI/8DO | 1 | **1938640000** |
| Subbus module | SAI-AU M8 SB 8DI | 1 | **1938600000** |
| Subbus module | SAI-AU M8 SB 8DI/8DO | 1 | **1938630000** |
| Subbus module | SAI-AU M12 SB AI | 1 | **1938690000** |
| Subbus module | SAI-AU M12 SB AO | 1 | **1938700000** |
| Subbus module | SAI-AU M12 SB PT100 | 1 | **1938710000** |
| Subbus module | SAI-AU M12 SB Thermo | 1 | **1938720000** |
| Subbus module | SAI-AU M12 SB Zähler | 1 | **1938730000** |
| Subbus module | SAI-AU M8 SB 8DO 2A | 1 | **1938660000** |
| Subbus module | SAI-AU M12 SB 8DO 2A | 1 | **1938680000** |
| **Modbus ASCII and USB accessories** | | | |
| USB Module plug-in connector | | | Chapter C |
| **Subbus cables / Terminating resistor** | | | |
| Subbus cables | | | Chapter C |
| Subbus terminating resistor | SAIEND CAN M8 4P | 1 | **1955340000** |
| **Sensor/actuator accessories** | | | |
| Sensor-actuator cables | | | Chapter B |
| Sensor-actuator plugs | | | Chapter D |
| **Markers** | | | |
| Semi-transparent markers for PrintJet printing | ESG 8/13.5/43.3 SAI AU | 5 | **1912130000** |
| **Protective caps** | | | |
| M8 Dust cap (Sensor connections) | SAI-SK M8 | 50 | **1802760000** |
| M12 Dust cap (Sensor connections) | SAI-SK | 30 | **9456050000** |
| M12 Dust cap (Bus-out and power-out) | SAI-SK-M12-UNI | 20 | **2330260000** |
| M12 Dust cap (Bus-in and power-in) | SAI-SK plug M12 | 50 | **1781520000** |

## Subbus modules with digital inputs/outputs

### SAI-AU Digital

### SAI-AU Digital

## Ordering data

| Module variants | Type | Qty. | Order No. | Type | Qty. | Order No. |
|---|---|---|---|---|---|---|
| 8 Digital In; 8 Digital In / 8 Digital Out | SAI-AU M8 SB 8DI | 1 | 1938600000 | SAI-AU M8 SB 8DIO | 1 | 1938630000 |
| 8 Digital In; 8 Digital In / 8 Digital Out | SAI-AU M12 SB 8DI | 1 | 1938610000 | SAI-AU M12 SB 8DIO | 1 | 1938640000 |
| 8 Digital Out 2A | | | | SAI-AU M8 SB 8DO 2A | 1 | 1938660000 |
| 8 Digital Out 2A | | | | SAI-AU M12 SB 8DO 2A | 1 | 1938680000 |
| Note | | | | | | |

## Technical data

| | | |
|---|---|---|
| **Connections** | | |
| Supply voltage (AUX-IN) | | 1x M12 plug 5-pole, A-coded |
| Connection to Subbus (SUB-IN) | 1 x M8 plug 4-pole, A-coded | 1 x M8 plug 4-pole, A-coded |
| Connection to Subbus (SUB-OUT) | 1 x M8 female 4-pole, A-coded | 1 x M8 female 4-pole, A-coded |
| I/O connections | 4 x M12 female, 5-pole A-coded | 4 x M12 female, 5-pole A-coded |
| **Voltage supply** | | |
| Operating voltage | 24 V (18 V DC ... 30 V DC) | 24 V (18 V DC ... 30 V DC) |
| Contact load | | Per PIN max. 4 A |
| Max. total current module | | 8 A |
| **Digital inputs** | | |
| Permitted input voltage | -30 V to +30 V (protected against polarity reversal) | -30 V to +30 V (protected against polarity reversal) |
| Input current, low | < 15 mA in accordance with EN 61131-2 Type 1 | < 15 mA in accordance with EN 61131-2 Type 1 |
| Input current, high | 2 mA to 15 mA in accordance with EN 61131-2 Type 1 | 2 mA to 15 mA in accordance with EN 61131-2 Type 1 |
| Input current, low | < 15 mA in accordance with EN 61131-2 Type 1 | < 15 mA in accordance with EN 61131-2 Type 1 |
| Input current, high | 2 mA to 15 mA in accordance with EN 61131-2 Type 1 | 2 mA to 15 mA in accordance with EN 61131-2 Type 1 |
| Input filter | 1 ms, 3 ms, 5 ms, 10 ms, Configurable | 1 ms, 3 ms, 5 ms, 10 ms, Configurable |
| Separation of potentials to module electronics | none | none |
| **Digital outputs** | | |
| max. current-carrying capacity per output signal | | 2 A |
| Separation of potentials to module electronics | | none |
| Switching frequency, resistive load | | max. 100 Hz |
| Switching frequency, inductive load | | max. 1 Hz |
| Switching frequency, lamp load | | max. 8 Hz |
| Short-circuit-proof | | Yes, cut-off for short circuit and error message |
| Output voltage, low | | 0 V DC |
| Output voltage, high | | Supply voltage less 0.7 V DC |
| Max. total current outputs | | 4 A |
| **Fieldbus** | | |
| Bus system | Subbus | Subbus |
| Addressing | automatic | automatic |
| System integration | automatic | automatic |
| **General data** | | |
| L x W x H | 155 mm / 30 mm / 32 mm | 180 mm / 30 mm / 32 mm |
| Earth | < 200 g | < 200 g |
| Protection degree | IP 67 | IP 67 |
| Operating temperature | 0 °C...+60 °C | 0 °C...+60 °C |
| Storage temperature | -25 °C...+85 °C | -25 °C...+85 °C |
| Housing main material / UL 94 flammability rating | Pocan, PBT / 5VA | Pocan, PBT / 5VA |
| Certificate | CE, cULus | CE, cULus |

Note

## Subbus modules with analogue inputs/outputs

### SAI-AU analogue

### SAI-AU Analog

## Ordering data

| Module variants | Type | Qty. | Order No. | Type | Qty. | Order No. |
|---|---|---|---|---|---|---|
| 4 Analogue Out / 4 Analogue In | SAI-AU M12 SB 4AO | 1 | 1938700000 | SAI-AU M12 SB 4AI | 1 | 1938690000 |
| **Note** | | | | | | |

## Technical data

| | | |
|---|---|---|
| **Connections** | | |
| Connection to Subbus (SUB-IN) | 1 x M8 plug 4-pole, A-coded | 1 x M8 plug 4-pole, A-coded |
| Connection to Subbus (SUB-OUT) | 1 x M8 female 4-pole, A-coded | 1 x M8 female 4-pole, A-coded |
| I/O connections | 4 x M12 female, 5-pole A-coded | 4 x M12 female, 5-pole A-coded |
| **Voltage supply** | | |
| Operating voltage | 24 V (18 V DC ... 30 V DC) | 24 V (18 V DC ... 30 V DC) |
| **Analogue inputs** | | |
| Measurement range | | -10 V ... +10 V, 0 V ... 10 V, 0 ... 20 mA, 4...20 mA |
| Maximum input voltage in relation to GND | | 35 V |
| Input resistance (load) | | <125 Ohm |
| Max. input current (differential) | | -50 mA to +50 mA (protected against polarity reversal) |
| Short-circuit-proof | | Yes |
| Resolution / Accuracy | | 12-bit / < 0.2 % |
| **Analogue outputs** | | |
| Measurement range | -10 V ... +10 V, 0 V ... 10 V, 0 ... 20 mA, 4...20 mA | |
| Output interval | 5 ms to 250 ms (can be configured) | |
| Short-circuit-proof | Yes | |
| Resolution / Accuracy | 12-bit / < 0.2 % | |
| **Fieldbus** | | |
| Bus system | Subbus | Subbus |
| Addressing | automatic | automatic |
| System integration | automatic | automatic |
| **General data** | | |
| L x W x H | 155 mm / 30 mm / 32 mm | 155 mm / 30 mm / 32 mm |
| Earth | < 200 g | < 200 g |
| Protection degree | IP 67 | IP 67 |
| Operating temperature | 0 °C...+60 °C | 0 °C...+60 °C |
| Storage temperature | -25 °C...+85 °C | -25 °C...+85 °C |
| Housing main material / UL 94 flammability rating | Pocan, PBT / 5VA | Pocan, PBT / 5VA |
| Certificate | CE, cULus | CE, cULus |

**Note**

## Subbus modules with functional inputs

### SAI-AU Counter

## Ordering data

| Module variants | Type | Qty. | Order No. |
|---|---|---|---|
| 2 counter inputs / 2 gate outputs | SAI-AU M12 SB 2Counter | 1 | 1938730000 |
| Note | | | |

## Technical data

| | |
|---|---|
| **Connections** | |
| Supply voltage (AUX-IN) | 1x M12 plug 5-pole, A-coded |
| Connection to Subbus (SUB-IN) | 1 x M8 plug 4-pole, A-coded |
| Connection to Subbus (SUB-OUT) | 1 x M8 female 4-pole, A-coded |
| I/O connections | 4 x M12 female, 5-pole A-coded |
| **Voltage supply** | |
| Operating voltage | 24 V (18 V DC ... 30 V DC) |
| Contact load | Per PIN max. 4 A |
| Max. total current module | 8 A |
| **Functional inputs** | |
| Counting breadth | 32 Bit |
| Switching frequency | 100 kHz |
| Number of inputs | 2 x enables, 2 x counters, 2 x count directions |
| **Fieldbus** | |
| Bus system | Subbus |
| Addressing | automatic |
| System integration | automatic |
| **General data** | |
| L x W x H | 180 mm / 30 mm / 32 mm |
| Earth | < 200 g |
| Protection degree | IP 67 |
| Operating temperature | 0 °C...+60 °C |
| Storage temperature | -25 °C...+85 °C |
| Housing main material / UL 94 flammability rating | Pocan, PBT / 5VA |
| Certificate | CE, cULus |

Note

## Subbus modules with functional inputs

## SAI-AU Thermo

### Ordering data

| Module variants | | Type | Qty. | Order No. |
|---|---|---|---|---|
| | 4 thermal inputs | SAI-AU M12 SB 4Thermo | 1 | 1938720000 |
| Note | | | | |

### Technical data

| | |
|---|---|
| **Connections** | |
| Connection to Subbus (SUB-IN) | 1 x M8 plug 4-pole, A-coded |
| Connection to Subbus (SUB-OUT) | 1 x M8 female 4-pole, A-coded |
| I/O connections | 4 x M12 female, 5-pole A-coded |
| **Voltage supply** | |
| Operating voltage | 24 V (18 V DC ... 30 V DC) |
| **Functional inputs** | |
| Sensor | Types J, K, L, B, E, N, R, S, T, U: mV readings |
| Temperature range | Typical for sensor, Preset Type K, -100 °C to 1,370 °C |
| Resolution | 0.1 °C per digit |
| Conversion time | 250 ms (can be configured to 70 ms) |
| Measurement error | < ± 0.5% (of measuring range limit) |
| Input filter | Configurable |
| cold junction compensation | External PT1000 connection on pins 1 and 3 (GND) |
| **Fieldbus** | |
| Bus system | Subbus |
| Addressing | automatic |
| System integration | automatic |
| **General data** | |
| L x W x H | 155 mm / 30 mm32 mm |
| Earth | < 200 g |
| Protection degree | IP 67 |
| Operating temperature | 0 °C...+60 °C |
| Storage temperature | -25 °C...+85 °C |
| Housing main material / UL 94 flammability rating | Pocan, PBT / 5VA |
| Certificate | CE, cULus |

| Note | |
|---|---|

## Subbus modules with functional inputs

## SAI-AU PT100

### Ordering data

| Module variants | |
|---|---|
| | 4 PT100 inputs |
| **Note** | |

| Type | Qty. | Order No. |
|---|---|---|
| SAI-AU M12 SB 4PT100 | 1 | **1938710000** |

### Technical data

| | |
|---|---|
| **Connections** | |
| Connection to Subbus (SUB-IN) | 1 x M8 plug 4-pole, A-coded |
| Connection to Subbus (SUB-OUT) | 1 x M8 female 4-pole, A-coded |
| I/O connections | 4 x M12 female, 5-pole A-coded |
| **Voltage supply** | |
| Operating voltage | 24 V (18 V DC ... 30 V DC) |
| **Functional inputs** | |
| Sensor | N100, N1000, N120, PT100, PT1000, PT200, PT300, PT500, Potentiometer connection, Resistance measurement |
| Resolution | 0.1 °C per digit |
| Conversion time | 250 ms (can be configured to 65 ms) |
| Measurement error | < ± 1 °C |
| Input filter | Configurable |
| Measurement range for PT sensors | -200 °C ... + 850 °C |
| Measurement range for Ni sensors | -60 °C ... +250 °C |
| Resistance measurement | max. 4000 Ohm |
| Potentiometer | 100 to 4000 Ω (three-wire connection) |
| Measurement current | Typically 0.5 mA |
| **Fieldbus** | |
| Bus system | Subbus |
| Addressing | automatic |
| System integration | automatic |
| **General data** | |
| L x W x H | 155 mm / 30 mm / 32 mm |
| Earth | < 200 g |
| Protection degree | IP 67 |
| Operating temperature | 0 °C...+60 °C |
| Storage temperature | -25 °C...+85 °C |
| Housing main material / UL 94 flammability rating | Pocan, PBT / 5VA |
| Certificate | CE, cULus |

**Note**

# SAI Active Universal Wireless

**Wireless versions of the Remote I/O System with IP 67 protection**

Weidmüller offers a remote wireless solution – the SAI Active Universal Wireless series – for providing radio-based communication to movable facility units. The remote modules form a safe, wireless I/O communications network and thus completely replace drag lines containing bus cables or interference-prone slip-ring assemblies. Maintenance and servicing is reduced because no communication cables are needed. Potential sources of error, such as broken shielding in the communication cables, are eliminated all together. Thus the user benefits from long-term cost savings. He requires neither new cables nor installation material for the new communication system. For the engineering system, the change to a wireless system is transparent; it behaves in an identical manner as the cable bound SAI Active Universal Pro System. No complex programming using proprietary software is required. Safe and reliable operations are ensured by the comprehensive diagnostics options on the module and through the higher-level controller.

All wireless modules feature integrated radio-wave antennae and IP 67 protection. They may be used directly in surroundings containing hazardous substances or humidity. The wireless modules bring together the required inputs and outputs in a very compact size. This ensures that the robot arms are not weighted down with bulky modules, additional components or external antennae. The wireless fieldbus module is a master module responsible for establishing communication with the higher-level controller unit and with the wireless I/O (slave) modules. Various slave modules with digital and analogue inputs and outputs are available and enable exact adjustments to the requirements of a given application. The wireless connection between the modules is established automatically and remains invisible to other wireless devices. This ensures that there will be no interference on the connection. The output power and, thus, the range, can be set individually on the module.

## Can be used instead of bus cables in drag line or slip chains

In non-stationary applications, a wireless connection can be used instead of the error prone drag-line-based bus cable or slip chain transmission. This helps to minimise facility downtimes and reduce costs for maintenance, installation and materials. The SAI wireless system has a similar handling method compared to cable bound systems so installation is simple and safe.

## Coexistence with other wireless systems

The wireless modules transmit in the license free ISM frequency band. This allows them to be used throughout the world. Integrated wireless mechanisms ensure that the modules can be operated at the same time as other wireless systems from other vendors. This ensures communication with no interference and also allows the system to coexist alongside other wireless systems (such as WLAN, ZigBee or Bluetooth).



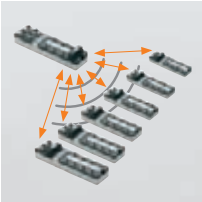

## A maximum of 186 modules can be used simultaneously.

The SAI Active Universal Wireless System allows 31 wireless fieldbus modules to be operated simultaneously with six remote I/O modules each. This makes it possible to design an automation solution that can process up to 3348 digital signals. Standardised device description files are provided so that the modules can be integrated into other systems not manufactured by Weidmüller. No special proprietary software is required.

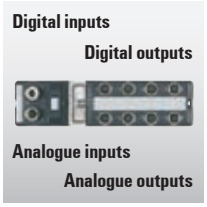


## A wide variety of variants

In addition to the fieldbus wireless module with 12 already integrated digital input channels, the SAI Active Universal Wireless product family encompasses other wireless I/O modules with up to 16 digital inputs, up to 8 of which can be configured and used by the user as outputs. A mixed module with both digital and analogue inputs and outputs is also available.

## Wireless gateway with digital inputs

### Wireless gateway

## Ordering data

| Module variants | |
|---|---|
| | 12 Digital In |
| **Note** | |

| Type | Qty. | Order No. |
|---|---|---|
| SAI-AU M12 GW PB/BT 12I | 1 | 1006980000 |

## Technical data

| | |
|---|---|
| **Connections** | |
| Fieldbus (BUS-IN) | 1x M12 plug 5-pole, B-coded |
| Fieldbus (BUS-OUT) | 1x M12 female 5-pole, B-coded |
| Supply voltage (AUX-IN) | 1x M12 plug 5-pole, A-coded |
| Supply voltage (AUX-OUT) | 1x M12 female 5-pole, A-coded |
| I/O connections | 6x M12 female 5-pole |
| **Voltage supply** | |
| Operating voltage | 24 V DC (18 V DC ... 30 V DC) |
| Contact load | Per PIN max. 4 A |
| **Digital inputs** | |
| Permitted input voltage | -30 V to +30 V (protected against polarity reversal) |
| Input current, low | < 15 mA in accordance with EN 61131-2 Type 1 |
| Input current, high | 2 mA to 15 mA in accordance with EN 61131-2 Type 1 |
| Input current, low | < 15 mA in accordance with EN 61131-2 Type 1 |
| Input current, high | 2 mA to 15 mA in accordance with EN 61131-2 Type 1 |
| Input filter | 1 ms, 3 ms, 5 ms, 10 ms, Configurable |
| **Fieldbus** | |
| Bus system | Profibus-DP |
| System integration / | GSD file / WIAU0A75.GSD |
| Range of coverage | In accordance with the PROFIBUS specification |
| Addressing | Via rotary coding switch (1 – 126) |
| Communication coexistence | Max. 31 wireless gateways |
| **Properties of radio system** | |
| Frequency band / Channel usage | 2.401 GHz ... 2.480 GHz / 1 to 79 channels (can be configured) |
| Transmit power | 0 dBm to 20 dBm / max 100 mW (can be configured) |
| **General data** | |
| L x W x H | 210 mm / 54 mm / 52 mm |
| Earth | < 400 g |
| Protection degree | IP 67 |
| Operating temperature | 0 °C...+60 °C |
| Storage temperature | -25 °C...+85 °C |
| Housing main material / UL 94 flammability rating | PBT, Pocan / V-0 |
| Certificate | CE |

**Note**

# Engineering tables for PROFIBUS

When planning the automation of a facility, you must have a wide variety of components available.
These engineering tables list all the components required for wiring up the SAI Wireless modules.

## PROFIBUS modules

## PROFIBUS accessories

## Sensor/actuator accessories

## Markers

## Protective caps

## Ordering data

| Description | Type | Qty. | Order No. |
|---|---|---|---|
| **PROFIBUS modules** | | | |
| Gateway module with 12 Digital In | SAI-AU M12 GW PB/BT 12I | 1 | **1006980000** |
| Subbus module with 16 Digital In | SAI-AU M12 BT 16DI | 1 | **1006940000** |
| Subbus module with 16 Digital In / 8 Digital Out | SAI-AU M12 BT 16DI/8DO | 1 | **1006930000** |
| Subbus module with 4 Analogue In / 2 Analogue Out / 2 Digital In / 2 Digital Out | SAI-AU M12 BT4AI2AO2DIO | 1 | **1006920000** |
| **PROFIBUS accessories** | | | |
| PROFIBUS cables with female plug and male plug | | | Chapter C |
| PROFIBUS cables with female plug and other side open | | | Chapter C |
| PROFIBUS cables with male plug and other side open | | | Chapter C |
| PROFIBUS plug-in connector | | | Chapter C |
| PROFIBUS terminating resistor | SAIEND PB M12 5P B-COD | 1 | **1784770000** |
| **Sensor/actuator accessories** | | | |
| Sensor-actuator cables | | | Chapter B |
| Sensor-actuator plugs | | | Chapter D |
| **Markers** | | | |
| Semi-transparent markers for PrintJet printing | ESG 8/13.5/43.3 SAI AU | 5 | **1912130000** |
| **Protective caps** | | | |
| M12 Dust cap (Sensor connections) | SAI-SK | 30 | **9456050000** |
| M12 Dust cap (Bus-out and power-out) | SAI-SK-M12-UNI | 20 | **2330260000** |
| M12 Dust cap (Bus-in and power-in) | SAI-SK plug M12 | 50 | **1781520000** |

F

## Wireless slave modules for digital signal processing

### Wireless slave

### Wireless slave

M12

## Ordering data

| Module variants | Type | Qty. | Order No. | Type | Qty. | Order No. |
|---|---|---|---|---|---|---|
| 16 Digital In; 16 Digital In / 8 Digital Out | SAI-AU M12 BT 16DI | 1 | 1006940000 | | | |
| 16 Digital In / 8 Digital Out | | | | SAI-AU M12 BT 16DI/8DO | 1 | 1006930000 |
| Note | | | | | | |

## Technical data

| | | |
|---|---|---|
| **Connections** | | |
| Supply voltage (AUX-IN) | 1x M12 plug 5-pole, A-coded | 2x M12 plug 5-pole, A-coded |
| Supply voltage (AUX-OUT) | 1x M12 female 5-pole, A-coded | |
| I/O connections | 8 x M12 socket 5-pole, A-coded | 8 x M12 socket 5-pole, A-coded |
| **Voltage supply** | | |
| Operating voltage | 24 V DC (18 V DC ... 30 V DC) | 24 V DC (18 V DC ... 30 V DC) |
| Contact load | Per PIN max. 4 A | Per PIN max. 4 A |
| **Digital inputs** | | |
| Permitted input voltage | -30 V to +30 V (protected against polarity reversal) | -30 V to +30 V (protected against polarity reversal) |
| Input current, low | < 15 mA in accordance with EN 61131-2 Type 1 | < 15 mA in accordance with EN 61131-2 Type 1 |
| Input current, high | 2 mA to 15 mA in accordance with EN 61131-2 Type 1 | 2 mA to 15 mA in accordance with EN 61131-2 Type 1 |
| Input current, low | < 15 mA in accordance with EN 61131-2 Type 1 | < 15 mA in accordance with EN 61131-2 Type 1 |
| Input current, high | 2 mA to 15 mA in accordance with EN 61131-2 Type 1 | 2 mA to 15 mA in accordance with EN 61131-2 Type 1 |
| Input filter | 1 ms, 3 ms, 5 ms, 10 ms, Configurable | 1 ms, 3 ms, 5 ms, 10 ms, Configurable |
| **Fieldbus** | | |
| Bus system | Radio in ISM band | Radio in ISM band |
| System integration | automatic | automatic |
| Range of coverage | Max. 100 m (open air), Max. 50 m (industrial surroundings) | Max. 100 m (open air), Max. 50 m (industrial surroundings) |
| Addressing | Via rotary coding switch | Via rotary coding switch |
| Communication coexistence | Max. 186 (for 31 wireless gateways each with 6 wireless slaves) | Max. 186 (for 31 wireless gateways each with 6 wireless slaves) |
| **Properties of radio system** | | |
| Frequency band / Channel usage | 2.401 GHz ... 2.480 GHz / 1 to 79 channels (can be configured) | 2.401 GHz ... 2.480 GHz / 1 to 79 channels (can be configured) |
| Transmit power | 0 dBm to 20 dBm / max 100 mW (can be configured) | 0 dBm to 20 dBm / max 100 mW (can be configured) |
| **General data** | | |
| L x W x H | 210 mm / 54 mm / 52 mm | 210 mm / 54 mm / 52 mm |
| Earth | < 400 g | < 400 g |
| Protection degree | IP 67 | IP 67 |
| Operating temperature | 0 °C...+60 °C | 0 °C...+60 °C |
| Storage temperature | -25 °C...+85 °C | -25 °C...+85 °C |
| Housing main material / UL 94 flammability rating | PBT, Pocan / V-0 | PBT, Pocan / V-0 |
| Certificate | CE | CE |

Note

## Wireless slave module for digital and analogue signal processing

## Wireless slave

**M12**

## Ordering data

| | Type | Qty. | Order No. |
|---|---|---|---|
| 4 Analogue In / 2 Analogue Out / 2 Digital In / 2 Digital Out | SAI-AU M12 BT4AI2AO2DIO | 1 | 1006920000 |
| **Note** | | | |

## Technical data

| | |
|---|---|
| **Connections** | |
| Supply voltage (AUX-IN) | 1x M12 plug 5-pole, A-coded |
| Supply voltage (AUX-OUT) | 1x M12 female 5-pole, A-coded |
| I/O connections | 8 x M12 socket 5-pole, A-coded |
| **Voltage supply** | |
| Operating voltage | 24 V DC (18 V DC ... 30 V DC) |
| Contact load | Per PIN max. 4 A |
| Max. total current module | 8 A |
| **Digital inputs** | |
| Permitted input voltage | -30 V to +30 V (protected against polarity reversal) |
| Input current, low | < 15 mA in accordance with EN 61131-2 Type 1 |
| Input current, high | 2 mA to 15 mA in accordance with EN 61131-2 Type 1 |
| Input current, low | < 15 mA in accordance with EN 61131-2 Type 1 |
| Input current, high | 2 mA to 15 mA in accordance with EN 61131-2 Type 1 |
| Input filter | 1 ms, 3 ms, 5 ms, 10 ms, Configurable |
| **Digital outputs** | |
| max. current-carrying capacity per output signal | 0.5 A |
| Switching frequency load (resistive / inductive / inrush) | max. 100 Hz / max. 1 Hz / max. 8 Hz |
| Short-circuit-proof | Yes, cut-off for short circuit and error message |
| Output voltage, low / Output voltage, high | 0 V DC / Supply voltage less 0.7 V DC |
| Max. total current outputs | 1 A |
| **Analogue inputs** | |
| Measurement range | -10 V ... +10 V, 0 V ... 10V, 0 ... 20 mA, 4...20 mA |
| Maximum input voltage in relation to GND | 35 V |
| Input resistance (load) | <125 Ohm |
| Max. input current (differential) | -50 mA to +50 mA (protected against polarity reversal) |
| Short-circuit-proof | Yes |
| Resolution / Accuracy | 12-bit / < 0.2 % |
| **Analogue outputs** | |
| Measurement range | -10 V ... +10 V, 0 V ... 10V, 0 ... 20 mA, 4...20 mA |
| Output interval | 20 ms to 250 ms (can be configured) |
| Short-circuit-proof | Yes |
| Resolution / Accuracy | 12-bit / < 0.2 % |
| **Fieldbus** | |
| Bus system | Radio in ISM band |
| System integration | automatic |
| Range of coverage | Max. 100 m (open air), Max. 50 m (industrial surroundings) |
| Addressing | Via rotary coding switch |
| Communication coexistence | Max. 186 (for 31 wireless gateways each with 6 wireless slaves) |
| **Properties of radio system** | |
| Frequency band / Channel usage | 2.401 GHz ... 2.480 GHz / 1 to 79 channels (can be configured) |
| Transmit power | 0 dBm to 20 dBm / max 100 mW (can be configured) |
| **General data** | |
| L x W x H | 210 mm / 54 mm / 52 mm |
| Earth | < 400 g |
| Protection degree | IP 67 |
| Operating temperature | 0 °C...+60 °C |
| Storage temperature | -25 °C...+85 °C |
| Housing main material / UL 94 flammability rating | Pocan, PBT / V-0 |
| Certificate | CE |

**Note**

# SAI empty housing


| | | |
|---|---|---|
| **SAI empty housing** | The Art of Making the Right Choice | G.2 |
| | The advantages at a glance | G.4 |
| | Technical description of individual components | G.5 |
| | Ordering data | G.6 |
| | Technical Information | G.11 |
| | Assembly steps for the SAI Universal Housing Set | G.12 |
| | SAI AU Housing Types | G.13 |
| | Drawings | G.14 |

# The Art of Making the Right Choice

There are numerous types of electronics housings available for the mounting rail with IP 20 protection. This opens up a whole range of options for users. The situation is completely different, however, when working with IP 67. Here the persistent question is how to keep liquids and dusts from penetrating the housing. Many product rely on encapsulation for this protection. When used daily, this is not problematic. But for small batches and for productions where encapsulation is not carried out daily, this technique can present a real obstacle.

Therefore Weidmüller has developed a housing range with absolutely no encapsulation. This also offers the option of using the circuit boards in reflow soldering since the required M12s are available as tray-packaged THT parts.

In the event of problems with the electronic circuitry after assembly, the housing can be re-opened to search for possible causes on the PCB.

The modules are only 54 mm wide and are normally supplied with 8 x M12 connectors along one side. On the bus and supply sides 4 connectors may be fitted. Both areas are separated with a transparent cover which allows settings to be made after they have been assembled.

It is worth highlighting the M12 Reflow-capable PCB plug-in connectors, which can be used in a sustained operating temperature of 105 °C. These are also available individually for use in an individually designed housing application.



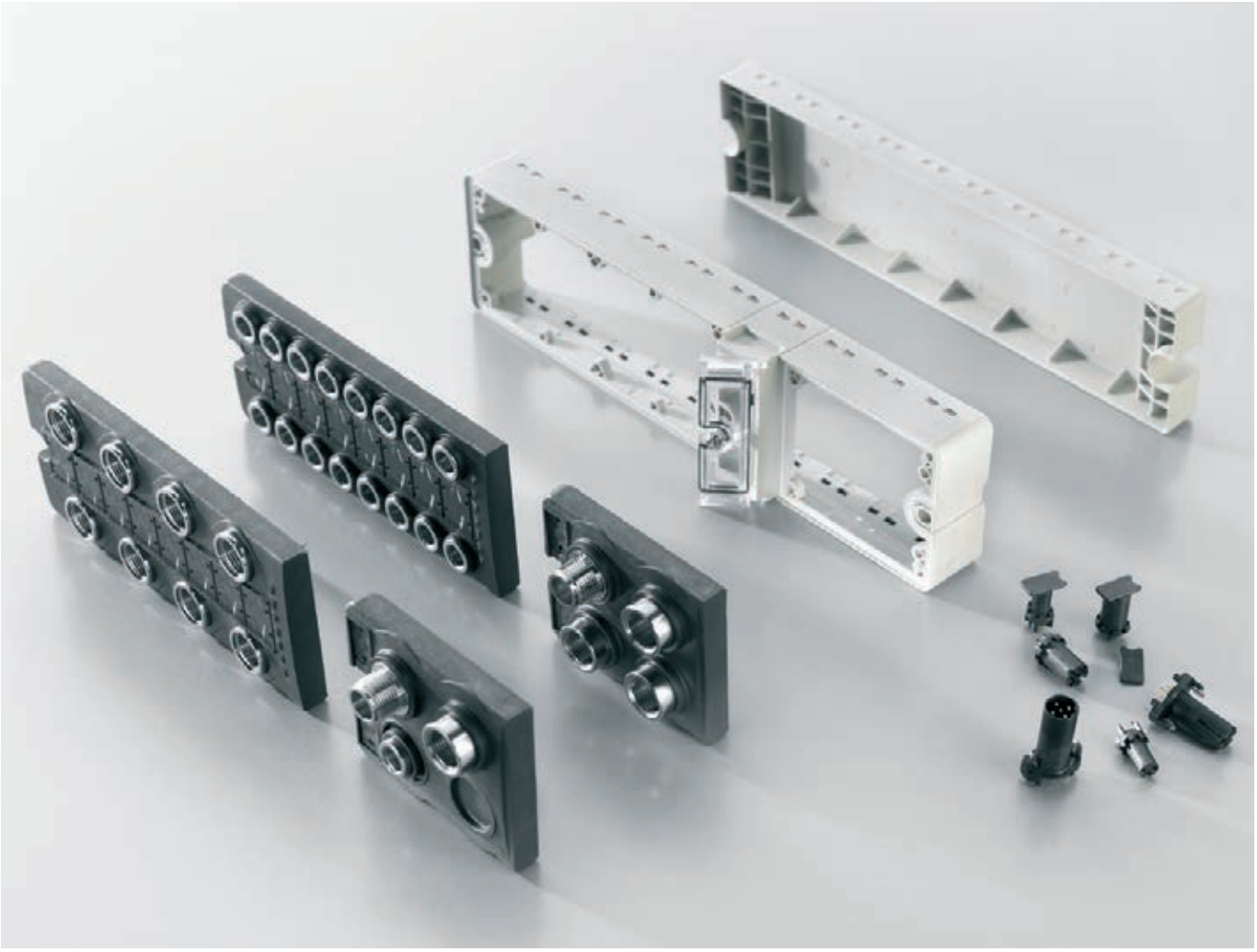

Another variant consists of a small housing with two M12 connectors. Here small switches can be integrated easily to adapt to existing levels and the M12 connectors are already included. The housing is packed as a set with 100 pieces. The price refers to a set with 100 equal parts.

If these housing solutions do not offer a viable solution for the required application, Weidmüller may offer a customised housing. With our years of experience, we can even offer an affordable solution for low volume orders. How is this achieved? Please feel free to ask!



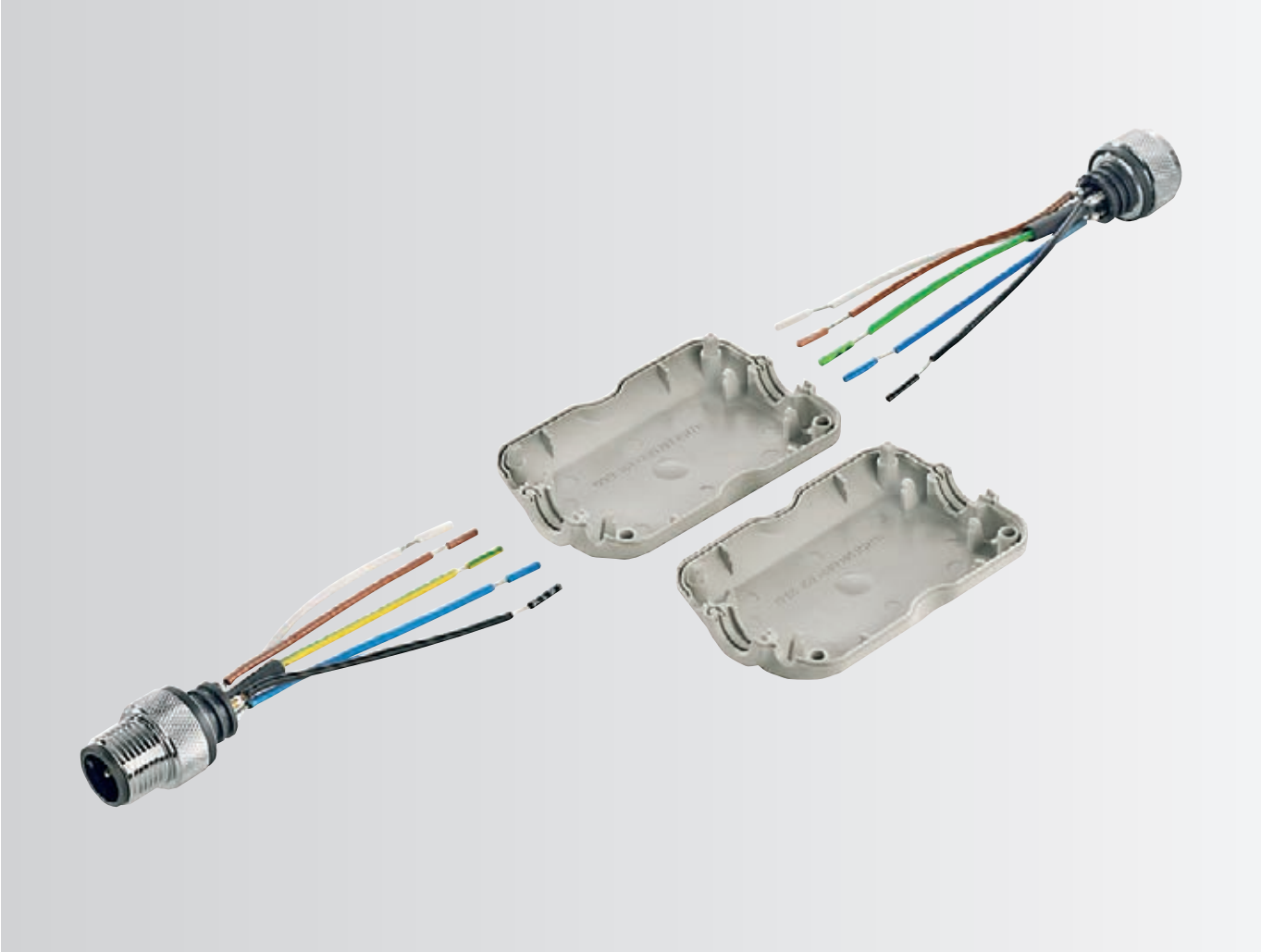



Technical and ordering data can be found, starting on page G.13.

# The advantages at a glance

**Non-encapsulated housing**
- Easy to assemble
- No encapsulation equipment needed
- Recyclable
- Disassembly for testing is possible

**M8/M12 connector**
- Reflow-compatible I/O plug-in connector
- High long-term-use temperature
- I/O plug in tray
- M12 available with different coding

**Material**
- Housing material laser-compatible PBT. This material is very resistant and sturdy.
- Threaded rings: nickel-plated brass – for secure attachment
- Machined, gold-plated contact – for high current capacity

**Service**
- Housings can also be ordered as a set
- They can be laser-inscribed before delivery

**Components**
- M12 and M8 connectors can also be ordered individually for use in your custom-designed housings

**Housings**
- Light-guide rods are integrated into cover
- Mounting holes on top and side
- Address chamber can be illuminated
- Housings available in black or grey

# Technical description of individual components

It is possible to assemble three different housing types together. These variants have different widths and lengths.
The first housing is 54 mm wide and 210.5 mm long. The second and third housing is always 30 mm wide and 155.5 mm or 180.5 mm long.

The following individual components are always required:

**54 mm**

| Designation |
|---|
| One frame |
| One base |
| One I/O cover |
| One bus/supply cover |
| One Functional Earth plate |
| One address cover |
| One address cover screw |
| Ten circuit board screws |

**30 mm short shape**

| Designation |
|---|
| One frame |
| One base |
| One cover |
| One Functional Earth plate |
| Six circuit board screws |

**30 mm long shape**

| Designation |
|---|
| One frame |
| One base |
| One cover |
| One Functional Earth plate |
| Six circuit board screws |

Added to this is the corresponding number of plug-in connector inserts. The quantity should be coordinated with the respective covers - with the I/O covers each requires different M12 plug-in connectors.

## SAI empty housing

### Ordering data

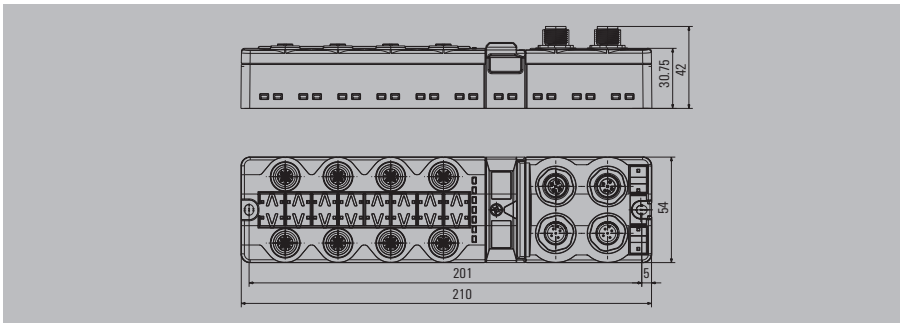


### 54 mm

**I/O cover**

With threaded bushing, without connector

| Designation | Type | Qty. | Order No. |
|---|---|---|---|
| M12 | SAI GHDE EA 8M12 | 25 | 1246490000 |
| M12 shielded | SAI GHDE EA 8M12 SIBL | 25 | 1246510000 |
| M8 | SAI GHDE EA 16M8 0.SIBL | 25 | 1246520000 |

**Frame, address flap, screw for address flap, floor, shield panel**

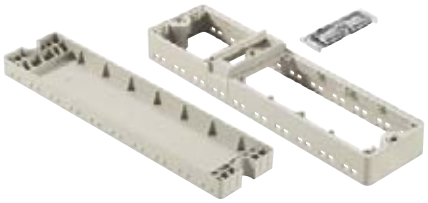

| Designation | Type | Qty. | Order No. |
|---|---|---|---|
| M12 shielded | SAI RA 54 KU | 25 | 1246530000 |
| Address cover | SAI AD 54 | 50 | 1966170000 |
| Screw for address cover | SAI BFSC M3x10 | 1 | 4310920000 |
| Base | SAI BP 54 KU | 50 | 1966190000 |
| Functional earth plate | SAI SIBL GH | 250 | 1966200000 |

**LP screws**

| Designation | Type | Qty. | Order No. |
|---|---|---|---|
| Screw for attachment to circuit board | PTSC 25X12 WN5452 | 100 | 4311430000 |

**bus/supply cover, short**

With threaded bushing, without connector

| Designation | Type | Qty. | Order No. |
|---|---|---|---|
| 4 M12, 1 male, 3 female | SAI GHDE 4M12 1S3B | 25 | 1246560000 |

You can find all variants on G.8

**O-rings for female sockets**

| Designation | Type | Qty. | Order No. |
|---|---|---|---|
| M12 | SAI O-RI 7.5X1.5 VI | 5000 | 4311000000 |
| M8 | SAI O-RI 5.0X0.8 NBR | 50000 | 4312340000 |

**M12 plug I/O**

Packaged in tray / reflow compatible

| Designation | Type | Qty. | Order No. |
|---|---|---|---|
| Female A-Keyway 5 pole | B KOTR M12 5P A BU SAI | 360 | 2326170000 |
| Female D-Keyway 4 pole | B KOTR M12 4P D BU SAI | 360 | 2341480000 |

## Ordering data

### M8 plug I/O

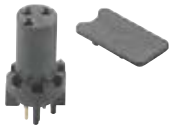

| Designation | Type | Qty. | Order No. |
|---|---|---|---|
| Female M8 3 pole | B KOTR M8 3P BU SAI | 360 | **2332380000** |

### M12 plug, bus/supply side, short

| Designation | Type | Qty. | Order No. |
|---|---|---|---|
| Female A-Keyway 5 pole shielded | B KOTR B M12 5POL A BU | 220 | **2350600000** |
| Male A-Keyway 5 pole shielded | B KOTR B M12 5POL A SF | 220 | **2350610000** |
| Female B-Keyway 5 pole shielded | B KOTR B M12 5POL B BU | 220 | **2350620000** |
| Male B-Keyway 5 pole shielded | B KOTR B M12 5POL B SF | 220 | **2350630000** |
| Female D-Keyway 4 pole shielded | B KOTR B M12 4POL D BU | 220 | **2350590000** |

### M8 plug, bus/supply side, short

| Designation | Type | Qty. | Order No. |
|---|---|---|---|
| Female 4 poles shielded | B KOTR BUS M8 4POL BU | 220 | **2350640000** |

### Threaded bushings

| Designation | Type | Qty. | Order No. |
|---|---|---|---|
| Male M12 | GWHUE BUS M12 SF SAI | 1 | **4322760000** |
| Female M12 | GWHUE BUS M12 BU SAI | 1 | **4322750000** |

### SET

| Designation | Type | Qty. | Order No. |
|---|---|---|---|
| M12 standard | SAI-AU ET SET M12 A COD | 1 | **1235340000** |

G

## SAI empty housing

### Ordering data

**I/O cover (3M12 | 2 pin, 1 socket // 1M8 | 1 socket)**

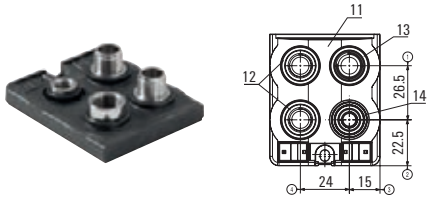


| Type | Qty. | Order No. |
|---|---|---|
| SAI GHDE 3M12 1M8 SAI | 25 | 1246540000 |

**I/O cover (3M12 | 1 pin, 2 socket)**

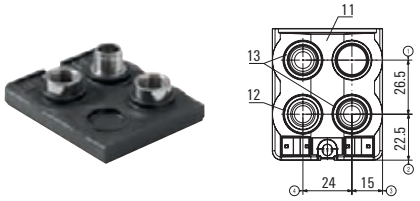


| Designation | Qty. | Order No. |
|---|---|---|
| SAI GHDE 3M12 1S2B | 25 | 1246550000 |

**LP I/O cover (4M12 | 2 pin, 2 socket)**

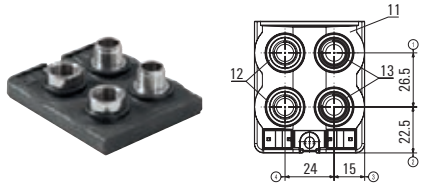


| Designation | Qty. | Order No. |
|---|---|---|
| SAI GHDE 4M12 2S2B | 25 | 1246570000 |

**I/O cover (4M12 | 2 pin, 2 socket, turned)**

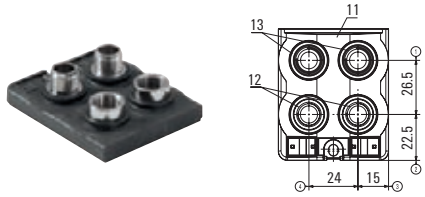


| Designation | Qty. | Order No. |
|---|---|---|
| SAI GHDE 4M12 2X1S1B | 25 | 1246580000 |

**I/O cover (4M12 | 3 pin, 1 socket)**

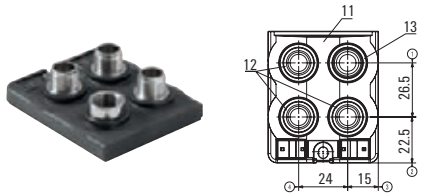


| Designation | Qty. | Order No. |
|---|---|---|
| SAI GHDE 4M12 3S1B | 25 | 1246590000 |

**I/O cover (4M12 | 1 pin, 3 socket)**

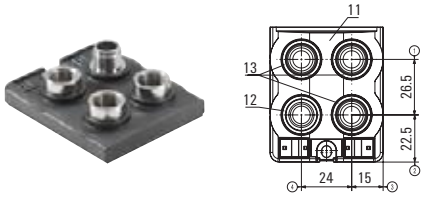


| Designation | Qty. | Order No. |
|---|---|---|
| SAI GHDE 4M12 1S3B | 25 | 1246560000 |

## Ordering data

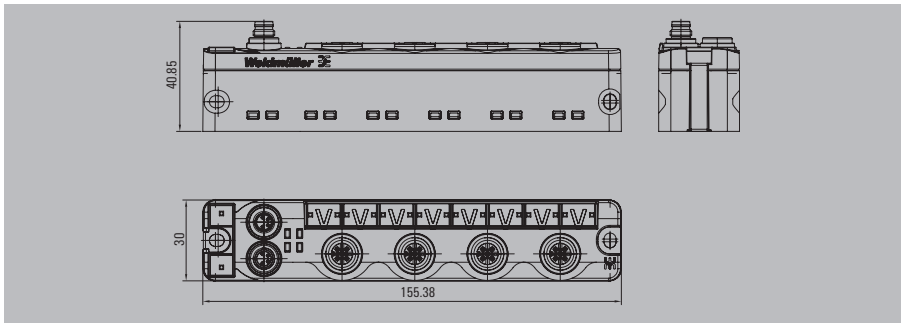


## 30 mm short version

### Cover

With threaded bushing, without connector

| Designation | Type | Qty. | Order No. |
|---|---|---|---|
| M12 | SAI GHDE 30 S KU M12 | 20 | 1246810000 |
| M12 shielded | SAI GHDE 30 S KU SI | 20 | 1246820000 |
| M8 | SAI GHDE 30 S KU M8 | 20 | 1246830000 |

### Frame, floor

| Designation | Type | Qty. | Order No. |
|---|---|---|---|
| Frame | SAI RA 30 SB KU | 20 | 1246660000 |
| Base | SAI BP 30 SB KU | 20 | 1246840000 |

### LP screws

| Designation | Type | Qty. | Order No. |
|---|---|---|---|
| Screw for attachment to circuit board | PTSC 25X12 WN5452 | 100 | 4311430000 |

### O-rings for female socket

| Designation | Type | Qty. | Order No. |
|---|---|---|---|
| M12 | SAI O-RI 7.5X1.5 VI | 5000 | 4311000000 |
| M8 | SAI O-RI 5.0X0.8 NBR | 50000 | 4312340000 |

### M12 plug I/O

| Designation | Type | Qty. | Order No. |
|---|---|---|---|
| Female A-Keyway 5 pole | B KOTR M12 5P A BU SAI | 360 | 2326170000 |
| Female D-Keyway 4 pole | B KOTR M12 4P D BU SAI | 360 | 2341480000 |

### bus/supply plug

| Designation | Type | Qty. | Order No. |
|---|---|---|---|
| Female M8 4 pole | B KOTR BUS M8 4POL BU | 220 | 2350640000 |
| Male M8 4 pole | B KOTR BUS M8 4POL SF | 220 | 2350650000 |

G

## SAI empty housing

### Ordering data

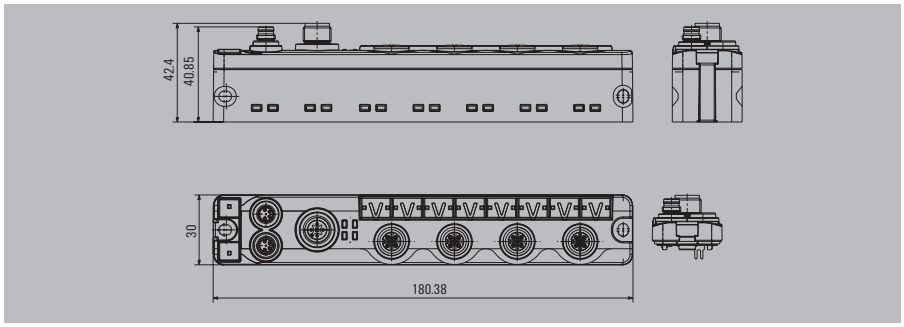


### 30 mm long version

**Cover**

With threaded bushing, without connector

| Designation | Type | Qty. | Order No. |
|---|---|---|---|
| M12 | SAI GHDE 30 SB LA M12 | 20 | 1246670000 |
| M12 shielded | SAI GHDE 30 SB LA SIBL | 20 | 1246680000 |
| M8 | SAI GHDE 30 SB LA M8 | 20 | 1246690000 |

**Frame, floor**

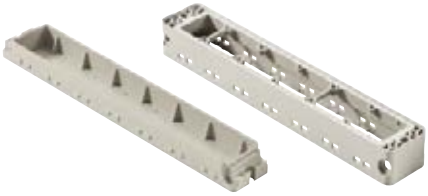

| Designation | Type | Qty. | Order No. |
|---|---|---|---|
| Frame | SAI RA 30 SB LA | 20 | 1246720000 |
| Base | SAI BP 30 SB LA | 20 | 1246710000 |

**LP screws**

| Designation | Type | Qty. | Order No. |
|---|---|---|---|
| Screw for attachment to circuit board | PTSC 25X12 WN5452 | 100 | 4311430000 |

**O-rings for female socket**

| Designation | Type | Qty. | Order No. |
|---|---|---|---|
| M12 | SAI O-RI 7.5X1.5 VI | 5000 | 4311000000 |
| M8 | SAI O-RI 5.0X0.8 NBR | 50000 | 4312340000 |

**M12 plug I/O**

| Designation | Type | Qty. | Order No. |
|---|---|---|---|
| Female A-Keyway 5 pole | B KOTR M12 5P A BU SAI | 360 | 2326170000 |
| Female D-Keyway 4 pole | B KOTR M12 4P D BU SAI | 360 | 2341480000 |

**bus/supply plug**

| Designation | Type | Qty. | Order No. |
|---|---|---|---|
| Female M8 4 pole | B KOTR BUS M8 4POL BU | 220 | 2350640000 |
| Male M8 4 pole | B KOTR BUS M8 4POL SF | 220 | 2350650000 |
| Male M12 A-Keyway 5 pole | B KOTR B M12 5POL A SF | 220 | 2350610000 |

# Technical Information

**O-rings**
These are required for the M12 and M8 sockets when establishing a seal in compliance with IP 67. O-rings are required for the female sockets but not for the male plugs.

**Press**
You will need a tool that can press the base in and close the housing without damaging it. Such a tool can be ordered through Weidmüller.

**Cover**
The covers are fitted with either M12 or M8 threaded nuts. The corresponding inserts must be ordered separately.

**Connectors in tray**
The I/O inserts are packaged and delivered in a tray. This makes them compatible with automatic placement processes.
All connector inserts offered in this product line can be reflow soldered.
The bus/supply inserts connectors are packaged and delivered in a box. They can also be reflow soldered.

**Circuit board screws**
The circuit board screws are self-cutting screws. Be sure, during assembly, to tighten the screws in the specified order. Ten screws are needed for each circuit board in the 54 mm housings. Six screws are needed per board in the 30 mm housings.

**Sample housings**
The Set article number can be used to order a 54 mm housing along with sufficient components for building a complete module. This is suitable for samples or small batches. A set consists of the following components:
One I/O cover, bus/supply cover, address cover, screw for address cover, Functional Earth plate, frame, base, eight M12 A-Keyway female sockets, 10 M12 O-rings, two M12 A-Keyway female sockets, two M12 male A-Keyway as bus/supply plug.

**Colour**
Housing parts can be ordered in either grey or black. The article numbers here specify the grey frame, grey base and black cover.

**Print**
Customised printing is also possible on request. The inscription is made with a laser.

# Assembly steps for the SAI Universal Housing Set

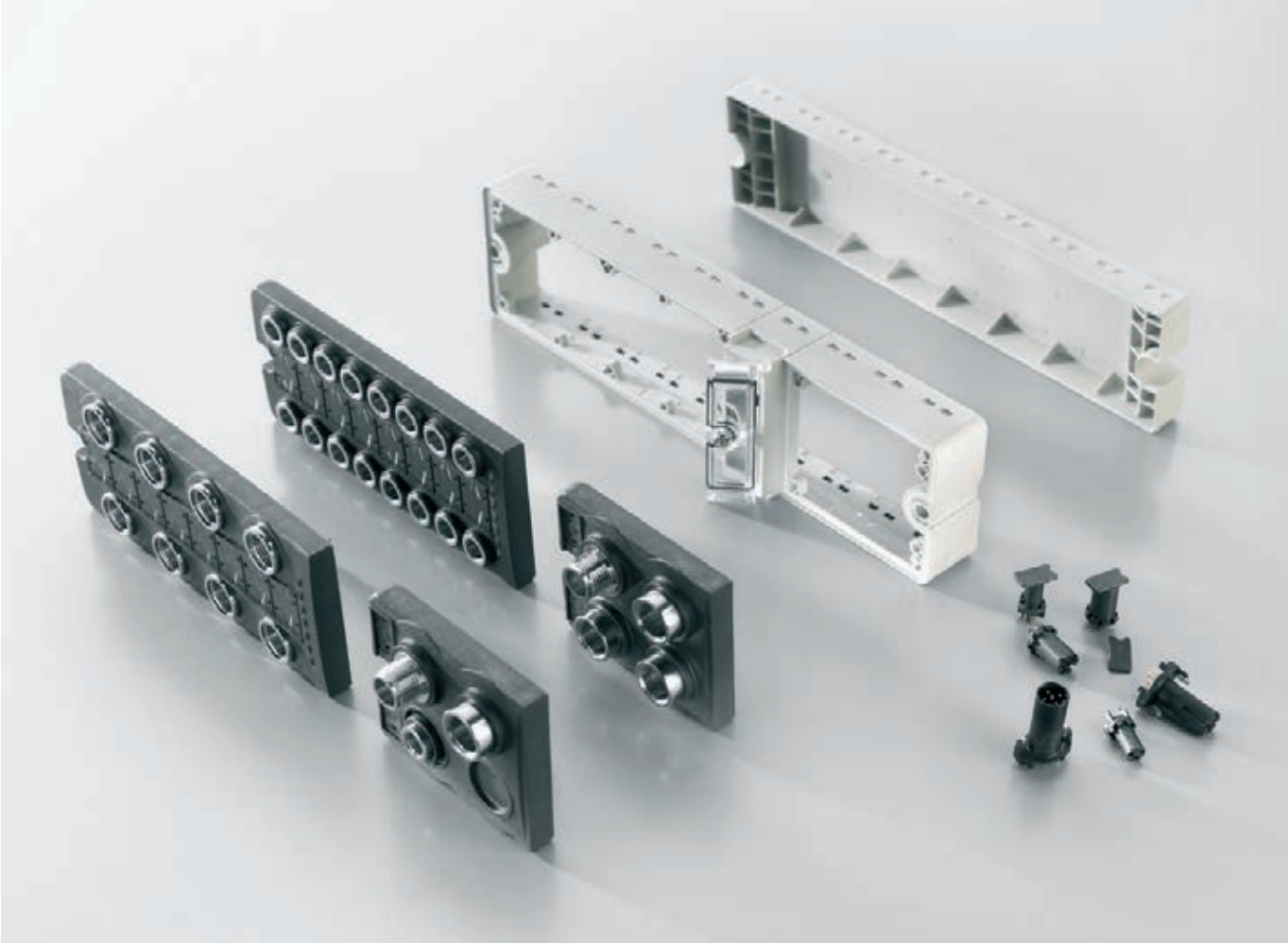

### ❶ Assemsling the frames and covers

**Assembly steps**
Position the frame with I/O cover and the bus/supply cover in the holder. Snap the printed circuit board in the frame and screw it together with housing **(be sure to maintain the proper torque and tightening sequence).**

Screw torque: 0.6 Nm

**Tightening sequence**

| | | | | | |
|---|---|---|---|---|---|
| 5 | 3 | 1 | 7 | | 9 |
| | EA | | | Bus | |
| 6 | 4 | 2 | 8 | | 10 |

### ❷ Snap in the housing base

**Assembly steps**
Use a press to snap the housing base into the housing frame.

### ❸ Final assembly

**Assembly steps**
1. Snap on the transparent cover
2. Screw on with 0.5 Nm torque
3. Attach the O-rings with a press
4. Snap on the Functional Earth plate
5. Add accessories (Multicard, protective caps, package inserts)

# SAI AU Housing Types

## SAI empty housing

| Type | Designation<br>54 mm | Order No. | Type | Qty. |
|---|---|---|---|---|
| I/O cover | M12 | 1246490000 | SAI GHDE EA 8M12 | 25 |
| | M12 shielded | 1246510000 | SAI GHDE EA 8M12 SIBL | 25 |
| | M8 | 1246520000 | SAI GHDE EA 16M8 O.SIBL | 25 |
| Frame set | Frame, address cover, screw for address cover, base | | | |
| | Frame | 1246530000 | SAI RA 54 KU | 25 |
| | Address cover | 1966170000 | SAI AD 54 | 50 |
| | Corresponding screw | 4310920000 | SAI BFSC M3x10 | 1 |
| | Base | 1966190000 | SAI BP 54 KU | 50 |
| | Functional Earth Plate | 1966200000 | SAI SIBL GH | 250 |
| PCB screws | | 1966180000 | SAI BFSC M3x10 | 1000 |
| Bus/supply cover | 3 M12, 1 M8 | 1246540000 | SAI GHDE 3M12 1M8 SAI | 25 |
| | 3 M12 1 male, 2 female | 1246550000 | SAI GHDE 3M12 1S2B | 25 |
| | 4 M12, 1 male 3 female | 1246560000 | SAI GHDE 4M12 1S3B | 25 |
| | 4 M12, 2 male, 2 female | 1246570000 | SAI GHDE 4M12 2S2B | 25 |
| | 4 M12 2X 1 male, 1 female | 1246580000 | SAI GHDE 4M12 2X1S1B | 25 |
| | 4 M12 3 male, 1 female | 1246590000 | SAI GHDE 4M12 3S1B | 25 |
| | 3 M12 1 PG9 | 1246610000 | SAI GHDE 3M12 1PG9 | 25 |
| O rings | M12 | 4311000000 | SAI O-RI 7.5X1.5 VI | 5000 |
| | M8 | 4312340000 | SAI O-RI 5.0X0.8 NBR | 50000 |
| M12 connector I/O | Female A-Keyway 5 pole | 2326170000 | B KOTR M12 5P A BU SAI | 360 |
| | Female D-Keyway 4 pole | 2341480000 | B KOTR M12 4P D BU SAI | 360 |
| M8 connector I/O | | 2332380000 | B KOTR M8 3P BU SAI | 360 |
| M12 connector, bus/supply cover side | Female A-Keyway 5 pole | 2350600000 | B KOTR B M12 5POL A BU | 220 |
| | Male A-Keyway 5 pole | 2350610000 | B KOTR B M12 5POL A SF | 220 |
| | Female B-Keyway 5 pole shielded | 2350620000 | B KOTR B M12 5POL B BU | 220 |
| | Male B-Keyway 5 pole shielded | 2350630000 | B KOTR B M12 5POL B SF | 220 |
| | Female D-Keyway 4 pole shielded | 2350590000 | B KOTR B M12 4POL D BU | 220 |
| M8 connector | Female 4 pole shielded | 2350640000 | B KOTR BUS M8 4POL BU | 220 |
| SET | M12 standard | 1235340000 | SAI-AU ET SET M12 A COD | |
| **Type** | **30 mm short** | **Order No.** | **Type** | **Qty.** |
| Cover | M12 | 1246810000 | SAI GHDE 30 S KU M12 | 20 |
| | M12 shield | 1246820000 | SAI GHDE 30 S KU SI | 20 |
| | M8 | 1246830000 | SAI GHDE 30 S KU M8 | 20 |
| Frame set | Base | 1246840000 | SAI BP 30 SB KU | 20 |
| | Frame | 1246660000 | SAI RA 30 SB KU | 20 |
| PCB screws | | 1966180000 | SAI BFSC M3x10 | 1000 |
| O rings | M12 | 4311000000 | SAI O-RI 7.5X1.5 VI | 5000 |
| | M8 | 4312340000 | SAI O-RI 5.0X0.8 NBR | 50000 |
| M12 connector I/O | Female A-Keyway 5 pole | 2326170000 | B KOTR M12 5P A BU SAI | 360 |
| | Female D-Keyway 4 pole | 2341480000 | B KOTR M12 4P D BU SAI | 360 |
| | Female M8 4 pole | 2350640000 | B KOTR BUS M8 4POL BU | 220 |
| | Male M8 4 pole | 2350650000 | B KOTR BUS M8 4POL SF | 220 |
| **Type** | **30 mm long** | **Order No.** | **Type** | **Qty.** |
| Cover | M12 | 1246670000 | SAI GHDE 30 SB LA M12 | 20 |
| | M12 shielded | 1246680000 | SAI GHDE 30 SB LA SIBL | 20 |
| | M8 | 1246690000 | SAI GHDE 30 SB LA M8 | 20 |
| Frame set | Base | 1246710000 | SAI BP 30 SB LA | 20 |
| | Frame | 1246720000 | SAI RA 30 SB LA | 20 |
| PCB screws | | 1966180000 | SAI BFSC M3x10 | 1000 |
| O rings | M12 | 4311000000 | SAI O-RI 7.5X1.5 VI | 5000 |
| | M8 | 4312340000 | SAI O-RI 5.0X0.8 NBR | 50000 |
| M12 connector I/O | Female A-Keyway 4 pole | | | |
| | Female A-Keyway 5 pole | 2326170000 | B KOTR M12 5P A BU SAI | 360 |
| | Female D-Keyway 4 pole | 2341480000 | B KOTR M12 4P D BU SAI | 360 |
| | Female M8 4 pole | 2350640000 | B KOTR BUS M8 4POL BU | 220 |
| | Male M8 4 pole | 2350650000 | B KOTR BUS M8 4POL SF | 220 |
| | Male M12 A-Keyway 5 pole | 2350610000 | B KOTR B M12 5POL A SF | 220 |

# I/O connector, plug M12

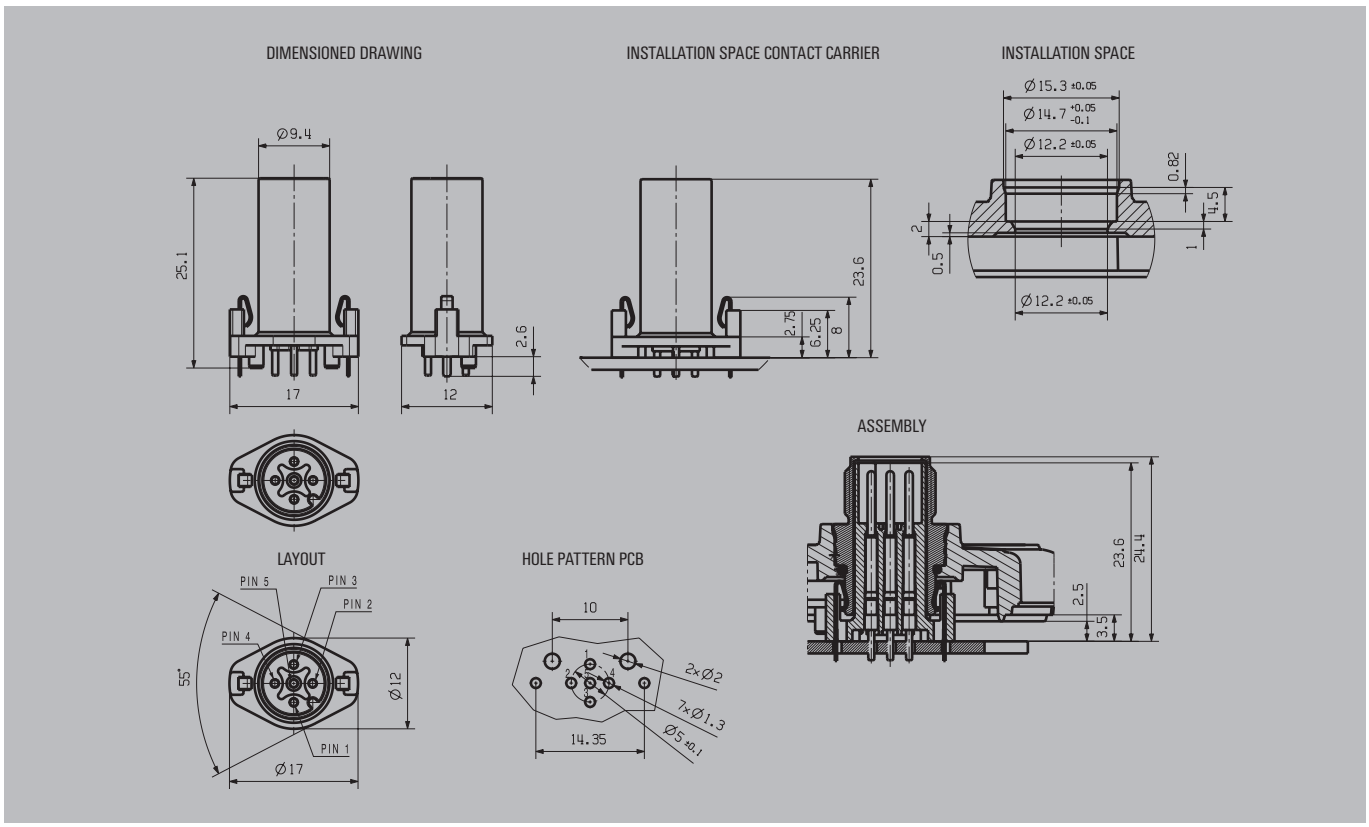


# I/O plug socket M12

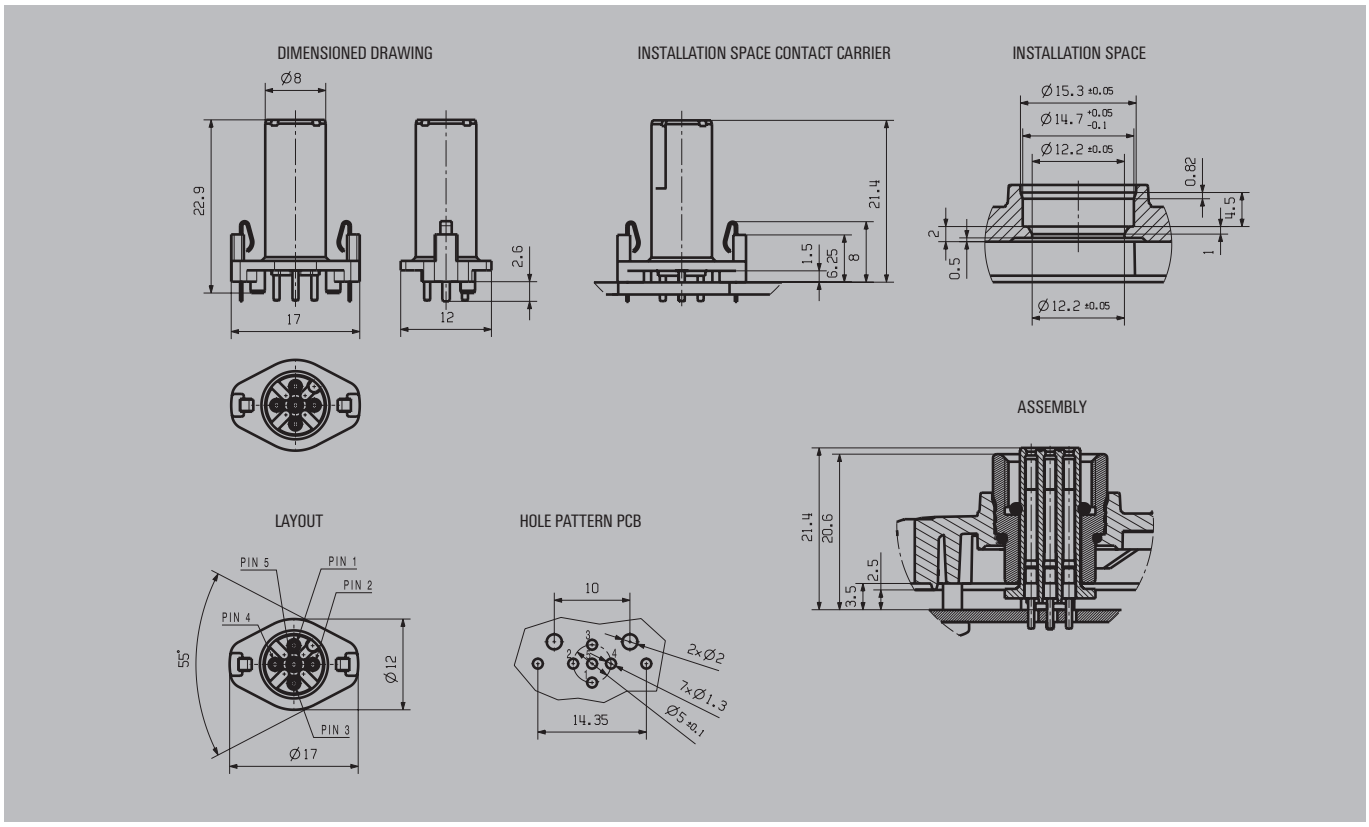

# I/O plug pin M8

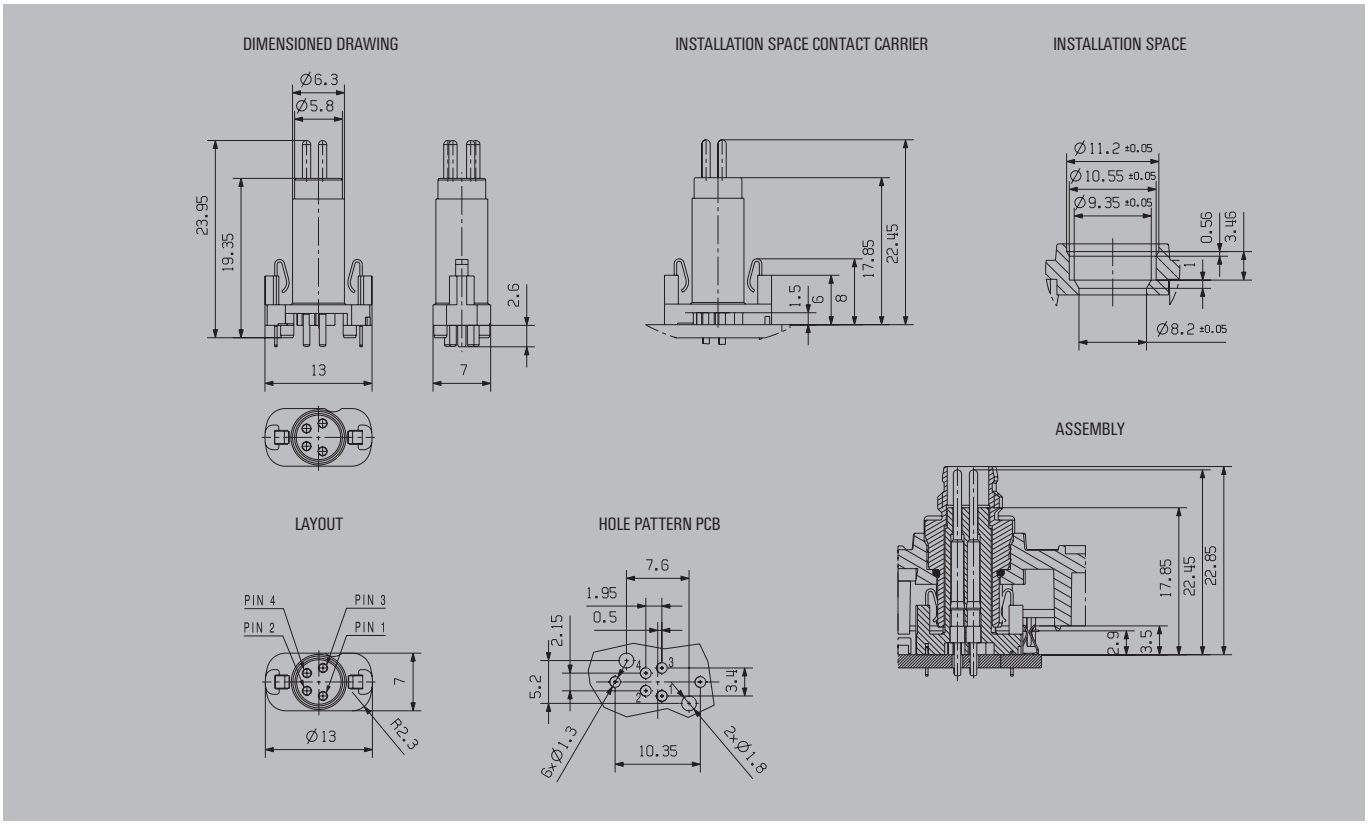


# I/O plug socket M8

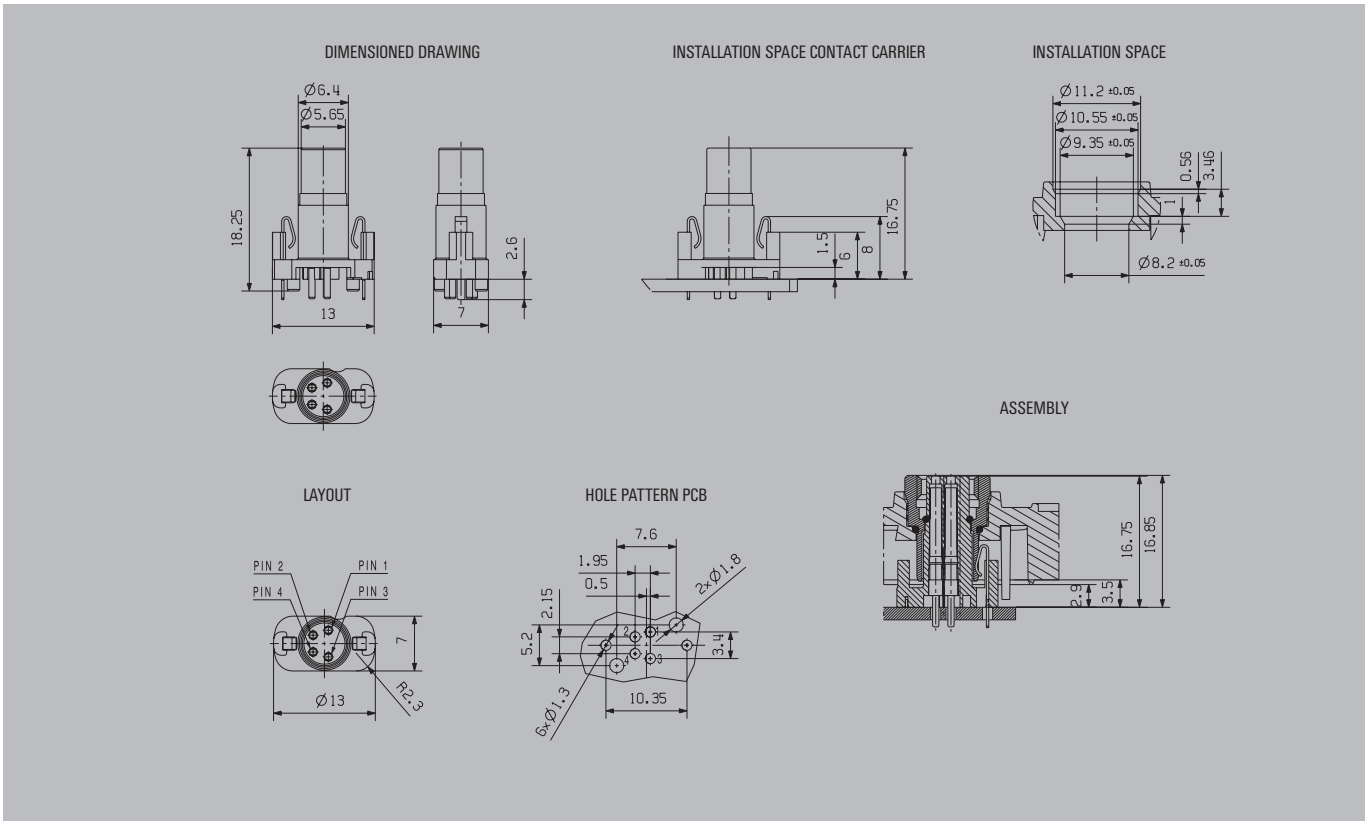

# E/A plug socket M12

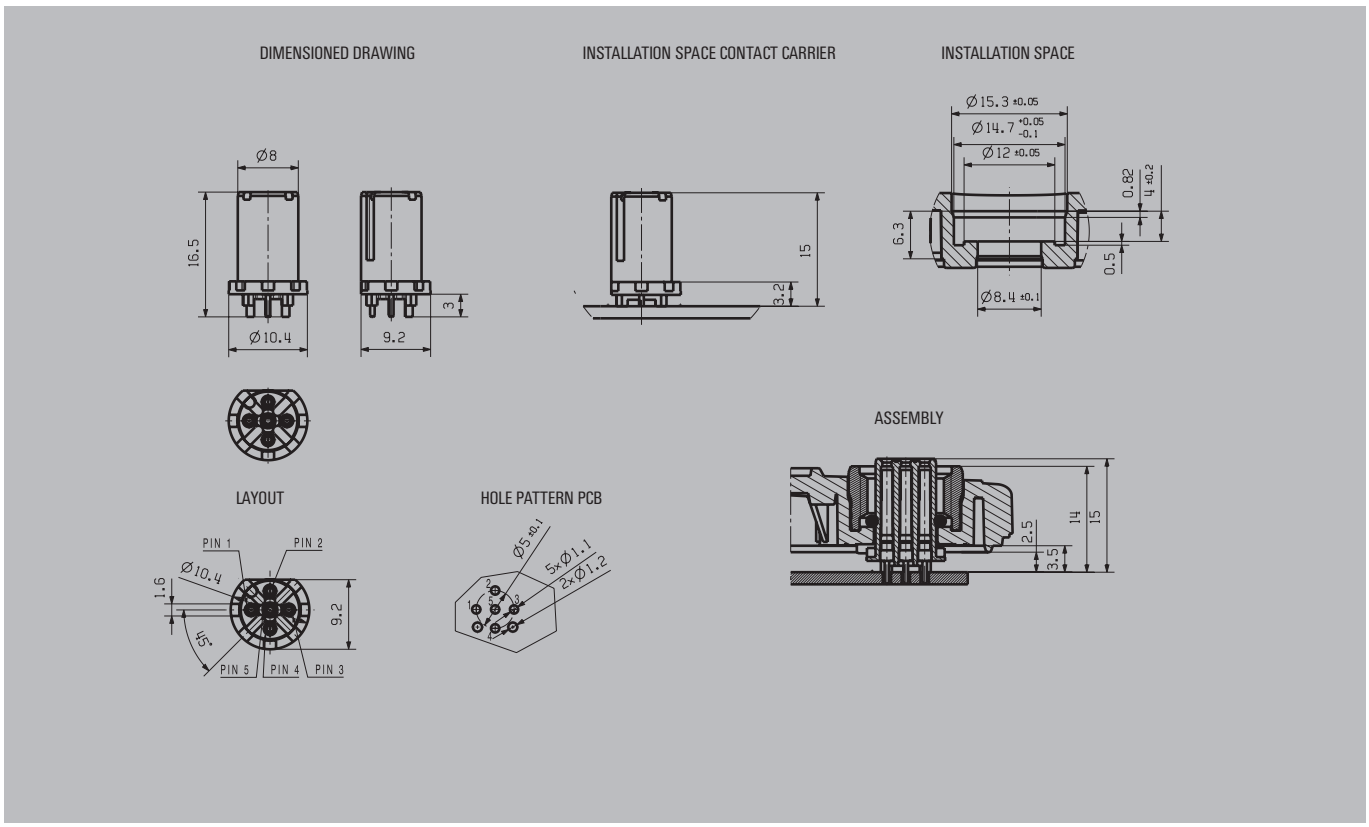


# E/A plug socket M8

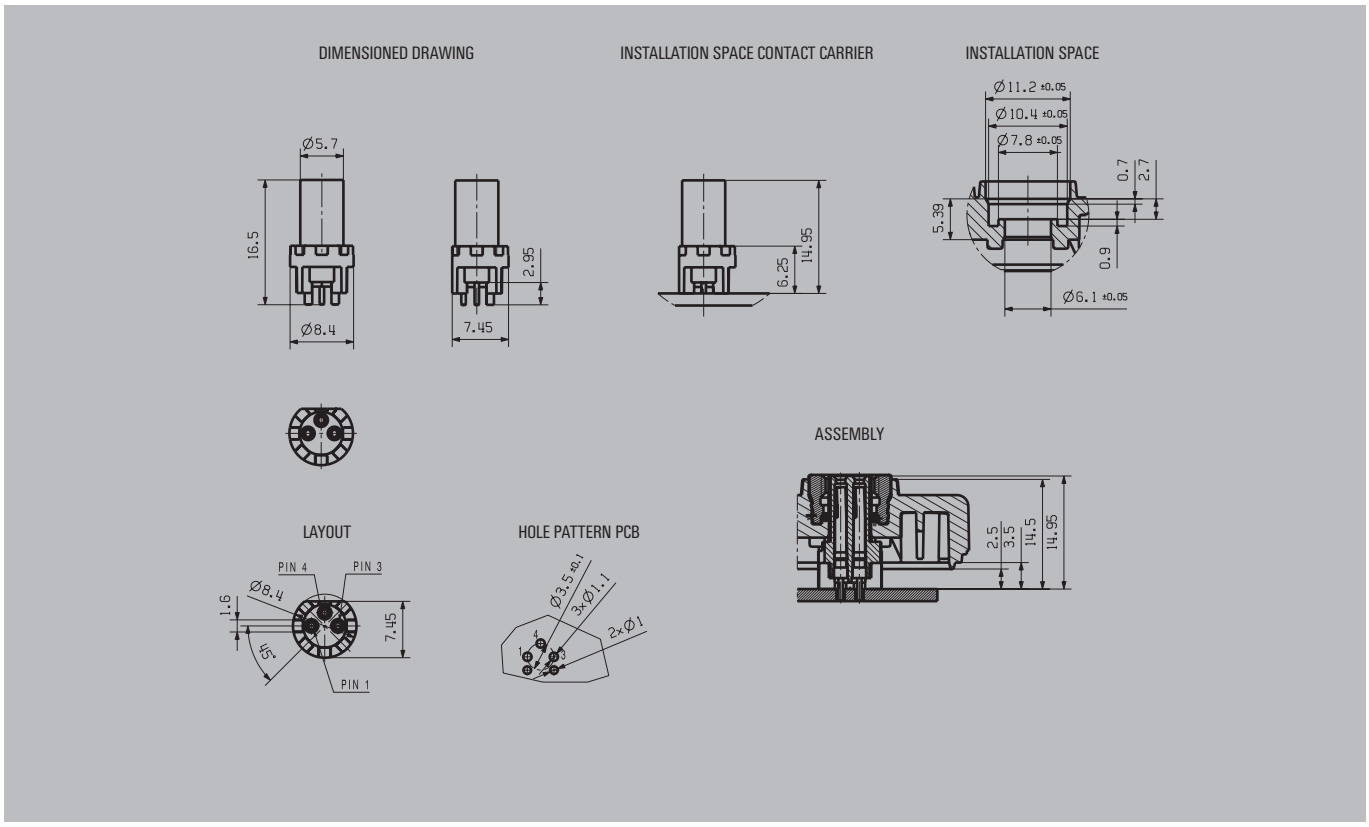

# 30 mm housing, long

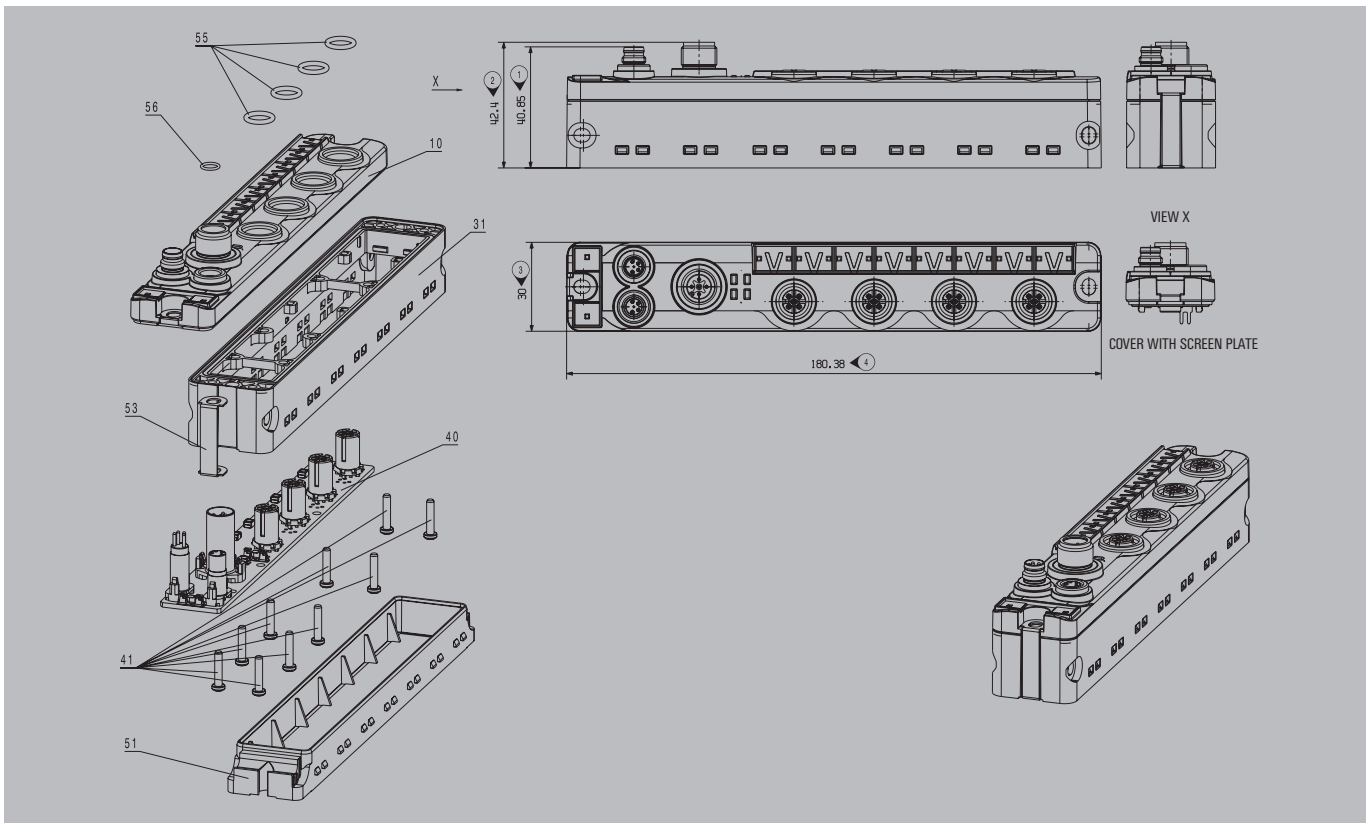


# 30 mm housing, short

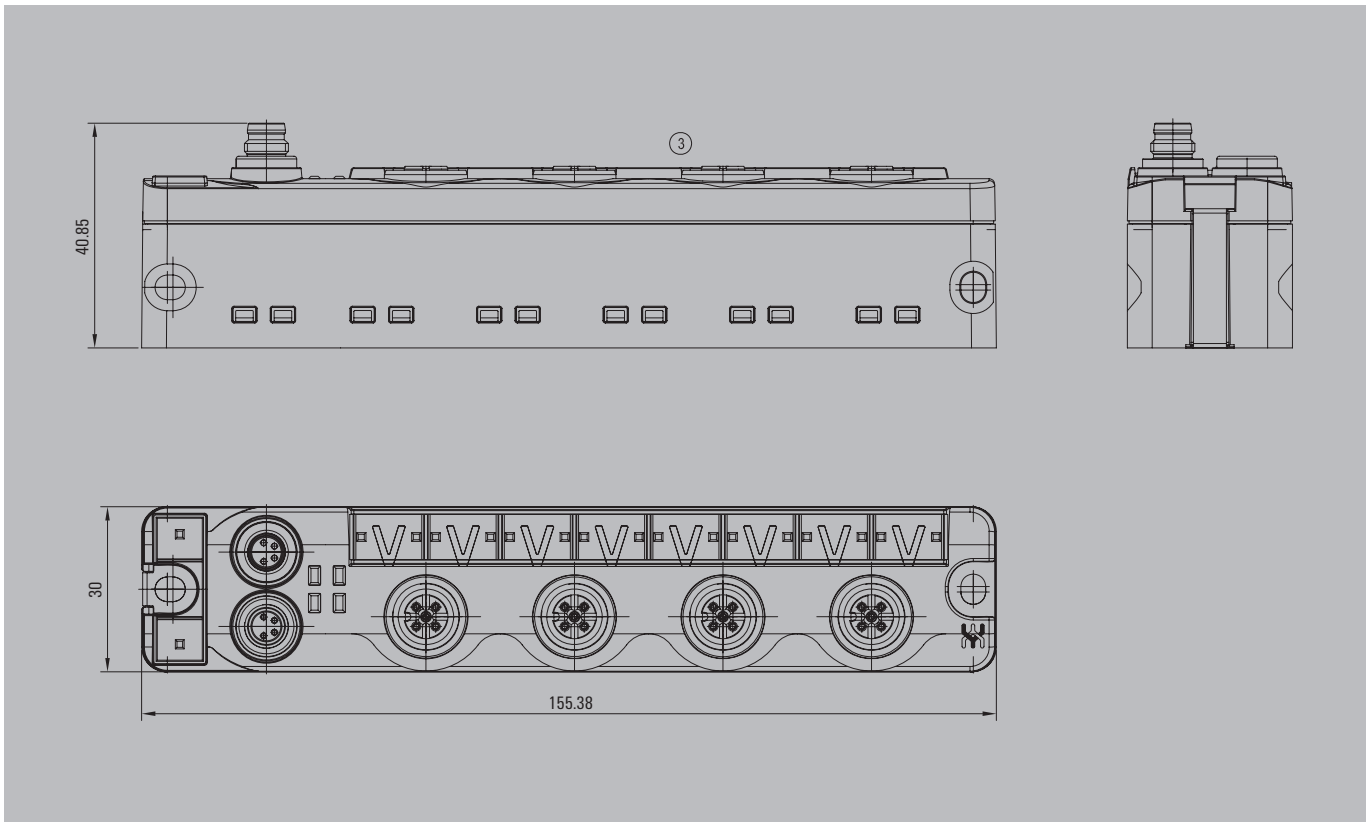

# Free space 30 mm housing long with M12

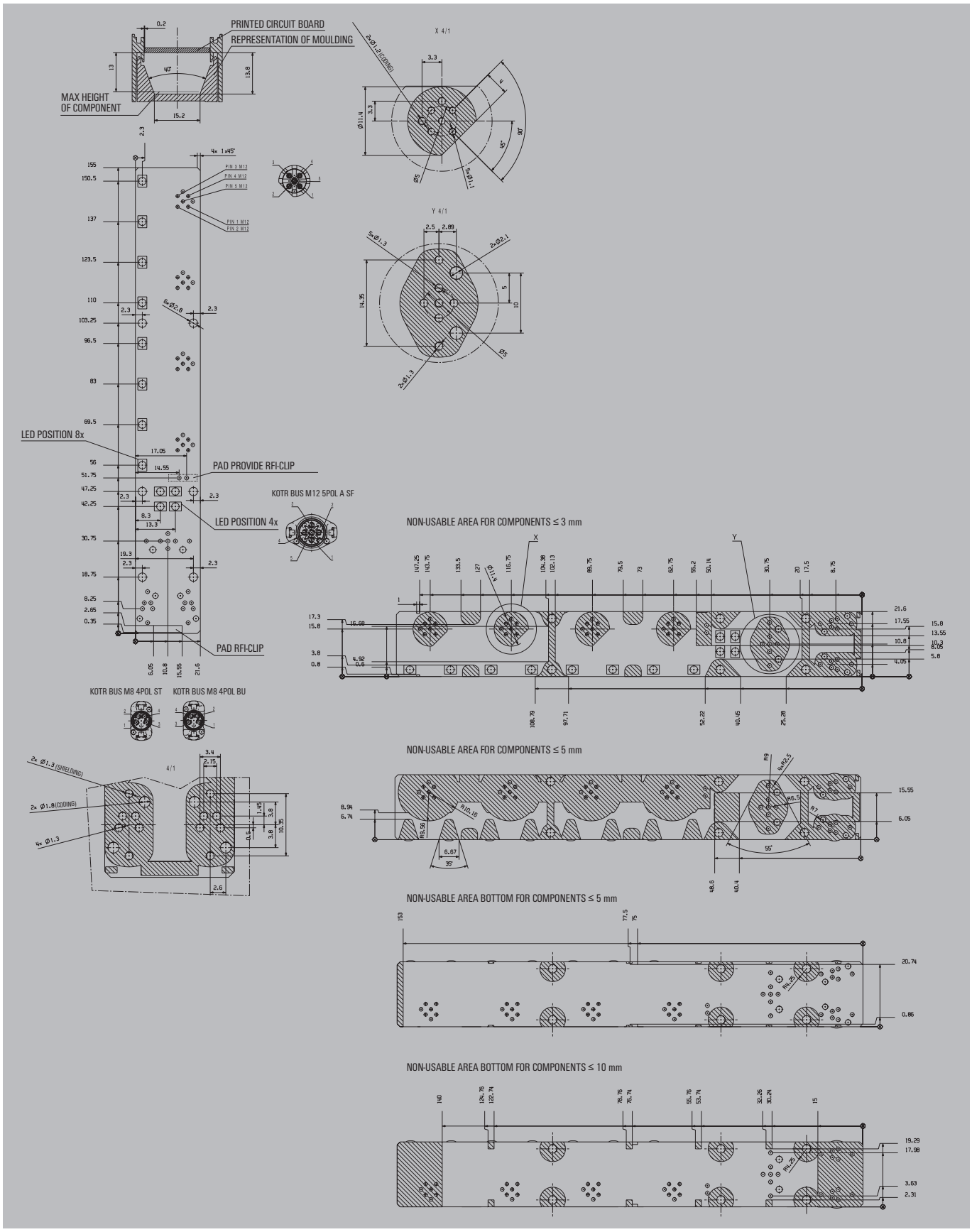

# Free space 30 mm housing long with M8

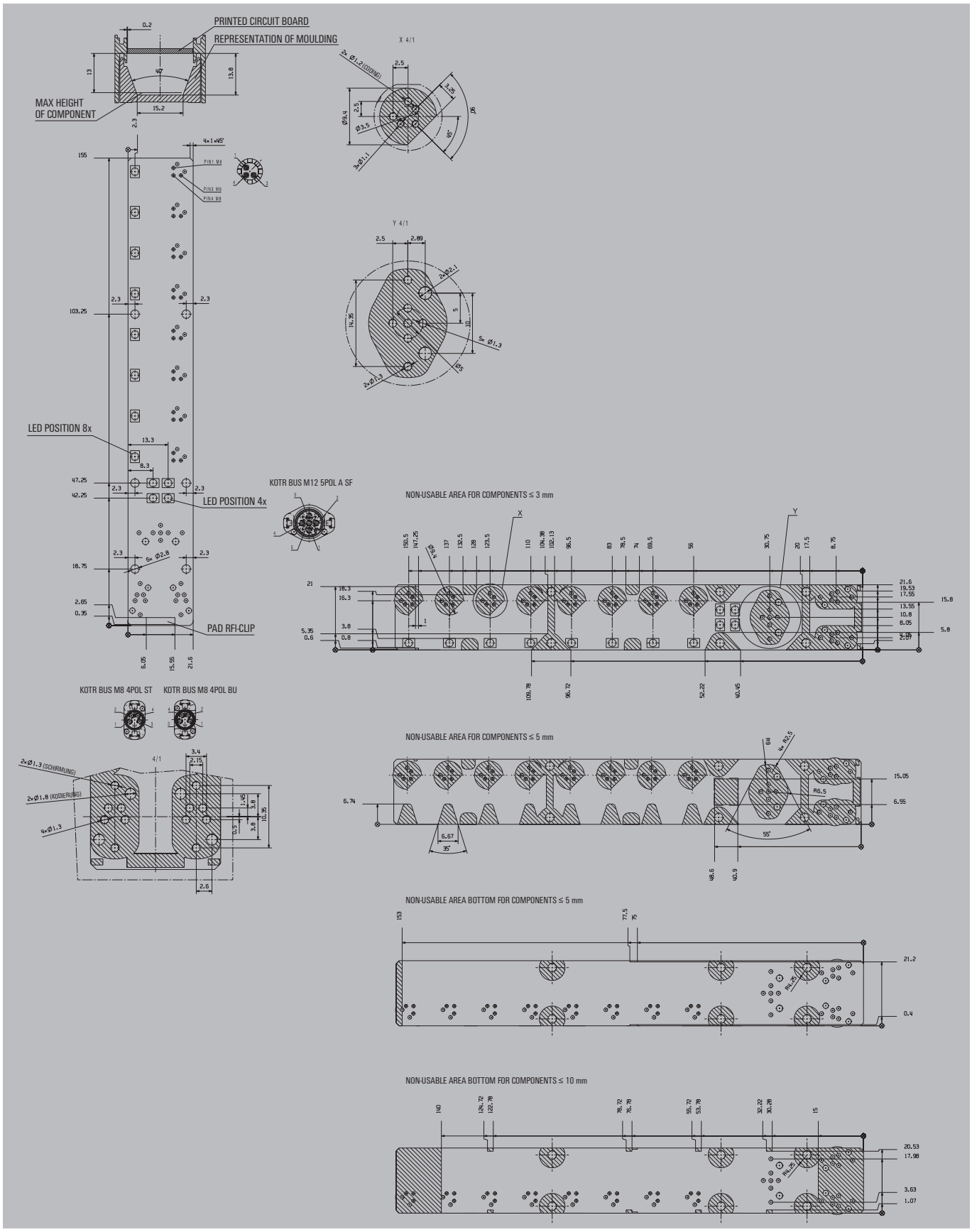

# Free space 30 mm housing short with M8

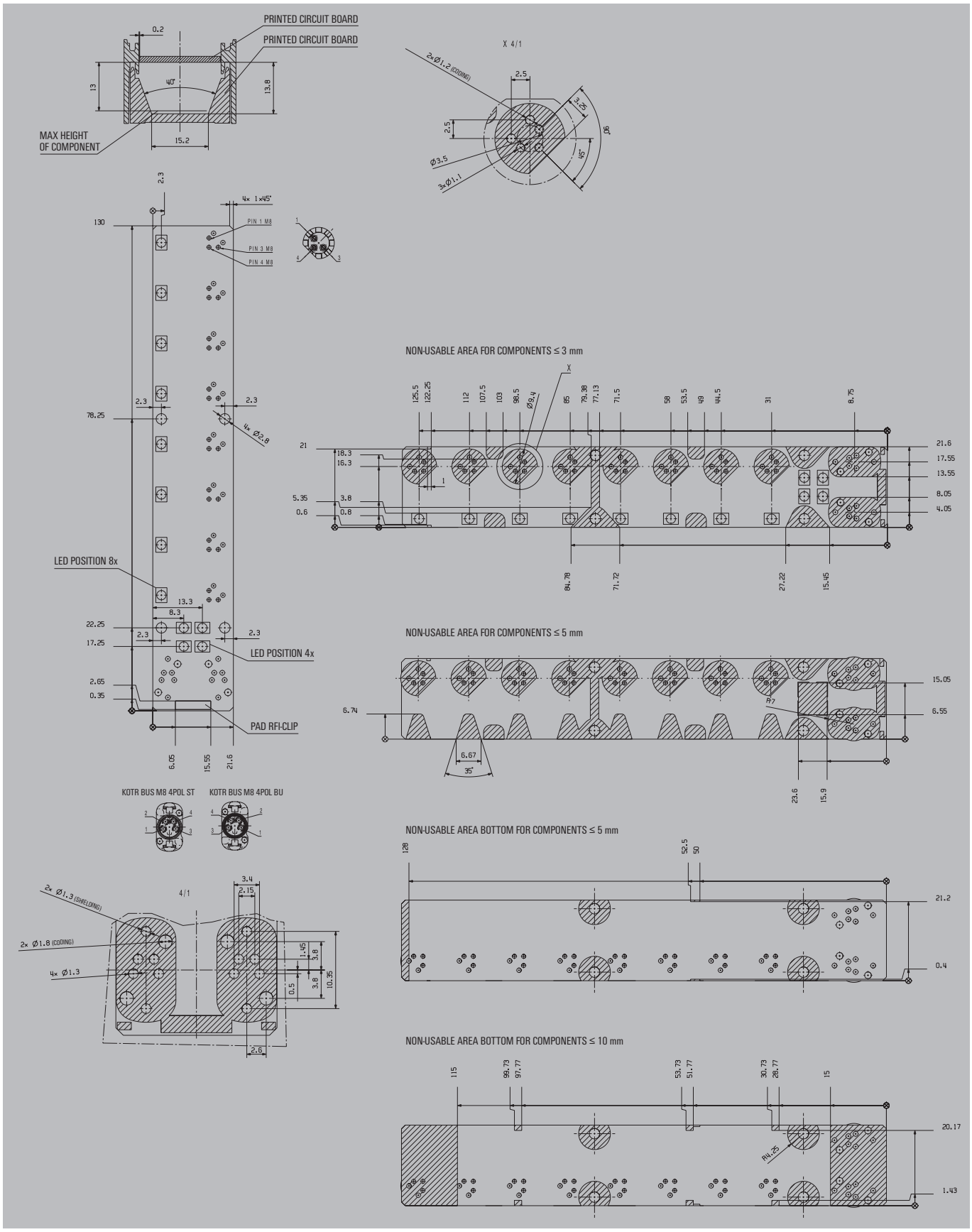

# Free space 54 mm housing

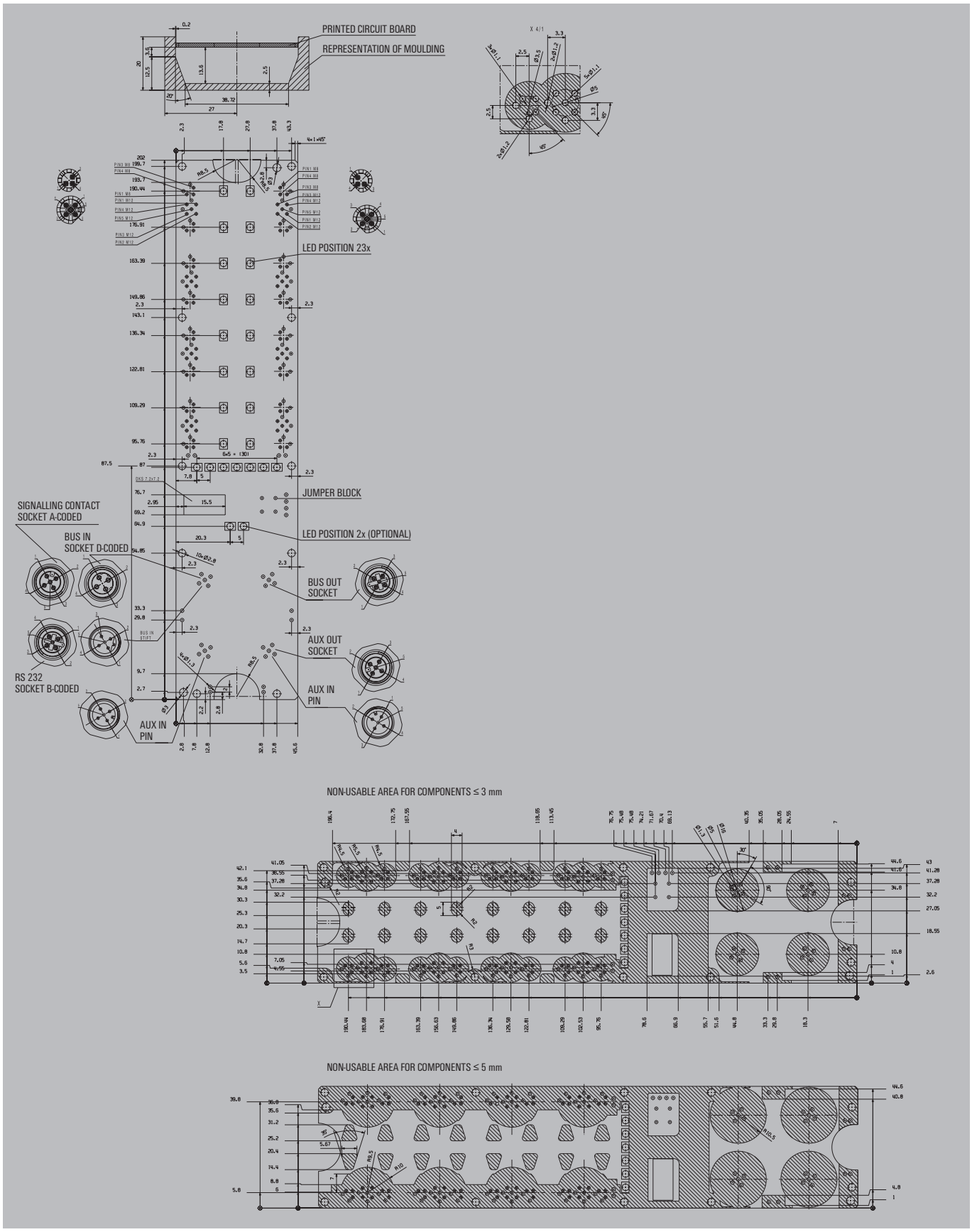

# JACKPAC® (IP 67)


| | | |
|---|---|---|
| **JACKPAC® (IP 67)** | JACKPAC® – Overview | H.2 |
| | JACKPAC® relay module | H.3 |
| | JACKPAC® timer | H.4 |
| | JACKPAC® signal inverter | H.5 |
| | JACKPAC® test | H.6 |
| | JACKPAC® – General Data and Accessories | H.7 |
| | Empty housing SAI JACKPAC® for custom built-in components | H.8 |

# The Concept

## The IP 20 Solution

Until now, all signal conditioning tasks were carried out by modules designed to IP 20. For their own protection, these needed to be installed in central switchgear cabinets. However, decentralised solutions that do not require large switchgear cabinets are increasingly being sought for use in modern-day industrial automation technology.
It is true that shielded signals can be fed to the machinery via powerful fieldbus systems; but in each case, however, there remains an interconnecting cable between the subdistribution boards and the sensors/actuators are susceptible to interference from surrounding operations.
As has always been the case, signals are still influenced by overvoltages and earth loops; interference pulses are superimposed on sensor signals and malfunctions can be initiated.
The result is that signal conditioning modules sealed to IP 20 require terminal boxes, such as switchgear cabinets, or even cost-intensive special solutions (for example, sensor-actuator distributors with integrated signal-conditioning functions providing as many functions as possible, even when these are surplus to requirements).

## The JACKPAC® Solution

By introducing **JACKPAC®**, the new M12 Signal Box with the high IP 67 ingress protection, Weidmüller can now provide a modular and versatile concept that makes it possible to condition signals in an industrial environment. Requiring no additional enclosures, these modules can be installed directly on the machine, in the production plant, conveyor system or within a process.
The M12 connector, which is standardised all over the world, makes it possible to integrate the **JACKPAC®** at any point in the sensor-actuator cabling. The fixed pin assignment means it is easy to install and is protected against polarity reversal. This versatility really comes into its own when an installation needs to be altered or modernised, simply because no additional enclosures or cabling are required.
By providing this high degree of protection and versatility, **JACKPAC®** renders possible innovative automation concepts based on decentralised applications – without large control cabinets or small distribution boards – for consistent, transparent, efficient and cost-efficient installations.

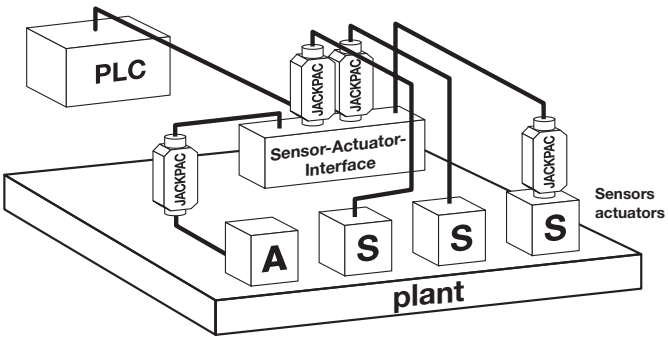


- Easy 'Plug and Play' installation
- Universal and versatile usage
- No additional enclosure required
- Saves time and costs
- Ideal for decentralised concepts and plant modernisation (retrofitting)

## Switching amplifiers

- Switching amplifiers are simply built into the actuator system controls
- Switching outputs can be amplified from 24 V DC /0.5 A to 24 V DC / 2 A
- Galvanic isolation is optional, for insulating between the input and output circuits, which prevents conducted interference on the switching output
- Switched voltage feed at output via T-distributor

## JPR 24 V DC 1CO M12

**without isolation**

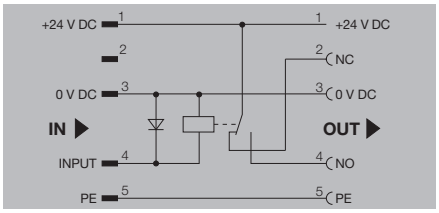


## JPR 24 V DC ISO 1CO M12

**with electrical isolation**

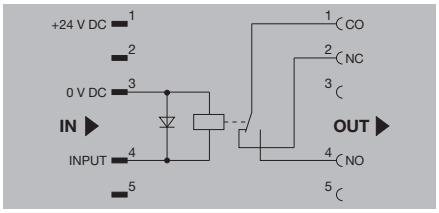


## Technical data

| | | |
|---|---|---|
| **Input** | | |
| Rated control voltage | 24 V DC ±20 % | 24 V DC ±20 % |
| Rated current DC | 8 mA | 8 mA |
| Power rating | 200 mW | 200 mW |
| DC Response/dropout volt | 16.8 V / 1.2 V | 16.8 V / 1.2 V |
| DC pickup/dropout current | 5 mA / 1 mA | 5 mA / 1 mA |
| Free-wheel diode | Yes | Yes |
| **Output** | | |
| Max. switching power | 24 V / 2 A | 24 V / 2 A |
| Min. switching power | 12 V / 10 mA | 12 V / 10 mA |
| Contact material | AgSnO | AgSnO |
| Mechanical service life | 10 x $10^6$ switching cycles | 10 x $10^6$ switching cycles |
| Max. switching frequency at rated load | 0.1 Hz | 0.1 Hz |
| Sparkover time / Drop-out time | ca. 5 ms | ca. 5 ms |
| **Insulation coordination (EN 50 178)** | | |
| Rated voltage | 300 | 300 |
| Surge voltage category | III | III |
| Pollution severity | 2 | 2 |
| **General data** | | |
| Ambient temperature (operational) | -25 °C...+70 °C | -25 °C...+70 °C |
| Storage temperature | -25 °C...+70 °C | -25 °C...+70 °C |
| Conductor connection system | M12 plug / socket, A-coded | M12 plug / socket, A-coded |
| Approvals | cULus; GOSTME25 | cULus; GOSTME25 |

| | | | |
|---|---|---|---|
| **Dimensions** | | | |
| Clamping range (nominal / min. / max.) | mm² | | |
| Length x width x height | mm | 83 / 36 / 14.4 | 83 / 36 / 14.4 |
| **Note** | | Details for TU = 20 °C | Details for TU = 20 °C |

## Ordering data

| Type | Qty. | Order No. |
|---|---|---|
| JPR 24VDC 1CO M12 | 1 | **8771420000** |

| Type | Qty. | Order No. |
|---|---|---|
| JPR 24VDC ISO 1CO M12 | 1 | **8771430000** |

**Note**

## Accessories

| | | |
|---|---|---|
| **Note** | Retaining clip<br>JP CLIP M: 8778490000 | Retaining clip<br>JP CLIP M: 8778490000 |

## Timer relay

Signal extenders can be easily connected to the cable between the sensor and the input modules.
They extend the pulse length from a minimum of 1 ms to 50 ms or 100 ms. This enables short senor signals to be reliably recognised and evaluated by the controller.

### JPTA 50 MS 24VDC PNP M12

**Pulse stretching, 50 ms**

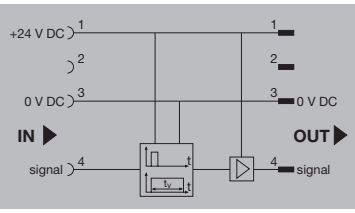


### JPTA 100 MS 24VDC PNP M12

**Pulse stretching, 100 ms**

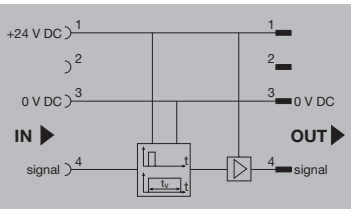


## Technical data

| | JPTA 50 MS 24VDC PNP M12 | JPTA 100 MS 24VDC PNP M12 |
|---|---|---|
| **Input** | | |
| Rated control voltage | 18...24...30 V DC | 18...24...30 V DC |
| Rated current DC | 3.5...7.0...10.0 mA | 3.5...7.0...10.0 mA |
| Switch-off delay | 50 ms | 100 ms |
| **Output** | | |
| Max. switching voltage, DC | 30 V | 30 V |
| Max. switching current | 400 mA | 400 mA |
| **Insulation coordination (EN 50 178)** | | |
| Rated voltage | 32 V | 32 V |
| Impulse withstand voltage | 330 V | 330 V |
| Surge voltage category | I | I |
| Pollution severity | 2 | 2 |
| **General data** | | |
| Ambient temperature (operational) | 0 °C...+60 °C | 0 °C...+60 °C |
| Storage temperature | -20 °C...+85 °C | -20 °C...+85 °C |
| Conductor connection system | M12 plug / socket, A-coded | M12 plug / socket, A-coded |
| Approvals | CE; cULus; GOSTME25 | CE; cULus; GOSTME25 |

| | | | |
|---|---|---|---|
| **Dimensions** | | | |
| Clamping range (nominal / min. / max.) | mm² | | |
| Length x width x height | mm | 83 / 36 / 14.4 | 83 / 36 / 14.4 |
| **Note** | | | |

## Ordering data

| Type | Qty. | Order No. |
|---|---|---|
| JPTA 50MS 24VDC PNP M12 | 1 | 8771440000 |

| Type | Qty. | Order No. |
|---|---|---|
| JPTA100MS 24VDC PNP M12 | 1 | 8836630000 |

**Note**

## Accessories

| Note | JPTA 50 MS 24VDC PNP M12 | JPTA 100 MS 24VDC PNP M12 |
|---|---|---|
| | Retaining clip<br>JP CLIP M: 8778490000 | Retaining clip<br>JP CLIP M: 8778490000 |

## Signal inverter

Signal inverters convert PNP sensor signals to NPN signals and NPN signals back to PNP. This means that existing circuits do not require complex alteration and the existing inputs on the I/O cards can be put to best use. This is particularly well suited for the Asian and North American markets.

### JPP NPN PNP 24 V DC

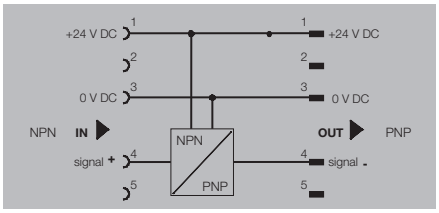


### JPP PNP NPN 24 V DC

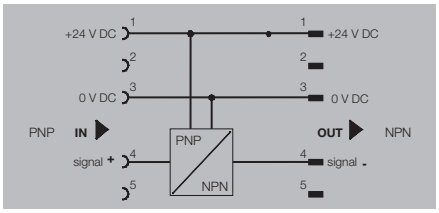


## Technical data

| | | |
|---|---|---|
| **Input** | | |
| Sensor | 2-/ 3-Conductor Sensor NPN-type | 2-/ 3-Conductor Sensor PNP-Type |
| Rated control voltage | 18...24...30 V DC | 18...24...30 V DC |
| Input current for sensor | < 200 mA | < 200 mA |
| Type of contact | NO contact | NO contact |
| **Output** | | |
| Solid-state type | Solid state relay | Solid state relay |
| Rated switching voltage | 18...30 V DC | 18...30 V DC |
| Rated switching current | 400 mA | 400 mA |
| Voltage drop at max. load | ≤ 1 V | |
| **Insulation coordination (EN 50 178)** | | |
| Rated voltage | 32 V | 32 V |
| Impulse withstand voltage | 330 V | 330 V |
| Surge voltage category | I | I |
| Pollution severity | 2 | 2 |
| **General data** | | |
| Ambient temperature (operational) | 0 °C...+60 °C | 0 °C...+60 °C |
| Storage temperature | -20 °C...+85 °C | -20 °C...+85 °C |
| Conductor connection system | M12 plug / socket, A-coded | M12 plug / socket, A-coded |
| Approvals | cULus; GOSTME25 | CE; cULus; GOSTME25 |

| | | | |
|---|---|---|---|
| **Dimensions** | | | |
| Clamping range (nominal / min. / max.) | mm² | | |
| Length x width x height | mm | 83 / 36 / 14.4 | 83 / 36 / 14.4 |
| **Note** | | | |

## Ordering data

| Type | Qty. | Order No. |
|---|---|---|
| JPP NPN PNP 24VDC | 1 | **8852350000** |

| Type | Qty. | Order No. |
|---|---|---|
| JPP PNP NPN 24VDC | 1 | **8857030000** |

| | | |
|---|---|---|
| **Note** | | |

## Accessories

| | | |
|---|---|---|
| **Note** | Retaining clip<br>JP CLIP M: 8778490000 | Retaining clip<br>JP CLIP M: 8778490000 |

## Test adapter

The new JACKPAC® test adapter can be easily integrated at any point on an M12 network and enables quick and easy connection of a testing device via the 5 PUSH IN connections. Status indicators show the status of the 2 signal channels as well as the 24 V DC auxiliary voltage.

## JP TEST

**with status indication**

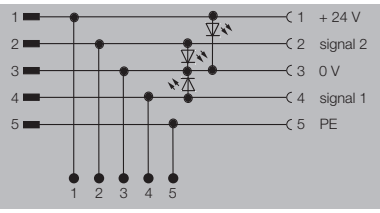


## Technical data

| | |
|---|---|
| **Input** | |
| Rated control voltage | 18...24...30 V DC |
| Rated current DC | 2.2 mA (LED) |
| Status indicator | Green LED |
| **Output** | |
| Continuous current | 2 A |
| Power | 2.2 mA at 24 V |
| **General data** | |
| Ambient temperature (operational) | 0 °C...+55 °C |
| Storage temperature | -25 °C...+70 °C |
| Conductor connection system | M12 plug / socket, A-coded |
| Approvals | CE; GOSTME25 |

| | | |
|---|---|---|
| **Dimensions** | | |
| Clamping range (nominal / min. / max.) | mm² | |
| Length x width x height | mm | 83 / 36 / 14.4 |
| **Note** | | |

## Ordering data

| Type | Qty. | Order No. |
|---|---|---|
| JP TEST | 1 | **8794120000** |

**Note**

## Accessories

| Note | |
|---|---|
| | Retaining clip<br>JP CLIP M: 8778490000 |

## General data

| | |
|---|---|
| Ingress protection class | IP 67 |
| Housing material | PBT, RAL 7032 (grey) |
| Flammability class | V0 to UL94 |
| Screw socket | M12, CuZn, nickel plated, A-coded |
| Rated torque | 0.8 ... 1 Nm |

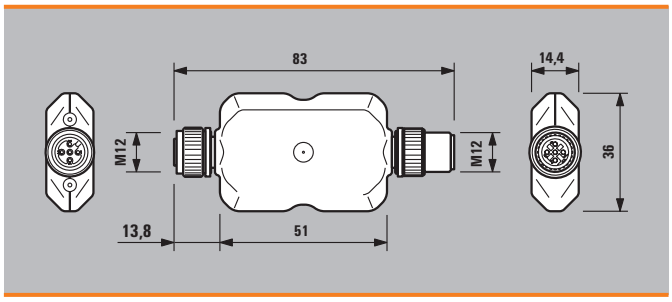


## Contact assignment (socket)

| Pole | Assignment |
|---|---|
| 1 | +24 V DC |
| 2 | Input / output 2 |
| 3 | 0 V DC |
| 4 | Input / output 1 |
| 5 | PE / Earth |

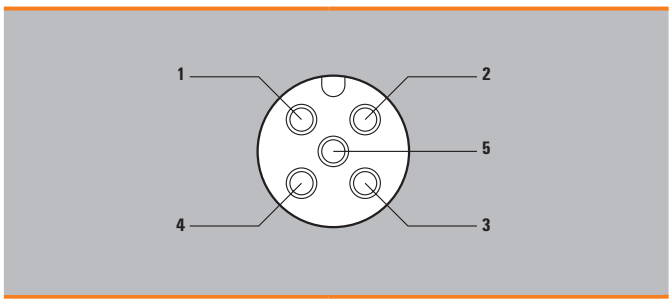


## Accessories

### Retaining clip

| | Type | Qty. | Order No. |
|---|---|---|---|
| Stainless steel | JP CLIP M | 1 | 8778490000 |

### Twin plug

| | Type | Qty. | Order No. |
|---|---|---|---|
| 5-pole | SAI-Y-5S PARA M12/M12 | 1 | 1783430000 |

### Screwty® M12

| | Type | Qty. | Order No. |
|---|---|---|---|
| With torque | SCREWTY M12 DM | 1 | 1900001000 |

### Sensor cables

| | Type | Qty. | Order No. |
|---|---|---|---|
| 4-pole, length 0.3 m | SAIL-M12G-M12G-4-0.3U | 1 | 1906300030 |
| 4-pole, length 0.6 m | SAIL-M12G-M12G-4-0.6U | 1 | 1906300050 |
| 4-pole, length 1.5 m | SAIL-M12G-M12G-4-1.5U | 1 | 1906300150 |
| 5-pole, length 0.3 m | SAIL-M12G-M12G-5-0.3U | 1 | 9457340030 |
| 5-pole, length 0.6 m | SAIL-M12G-M12G-5-0.6U | 1 | 9457340060 |
| 5-pole, length 1.5 m | SAIL-M12G-M12G-5-1.5U | 1 | 9457340150 |

Additional accessories can be found in the Sensor Actuator Interface catalogue.

**Empty housing SAI JACKPAC®**
**for custom built-in components**

## SAI JP

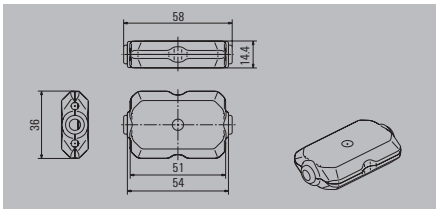


## Technical data

| General data | |
|---|---|
| Temperature range | -25 °C ... +70 °C |
| Connection system | M12 plug/socket, A-coded |
| Contact base material | AgSnO |
| Surface finish | Au |



## Dimensioned drawing SAI JP

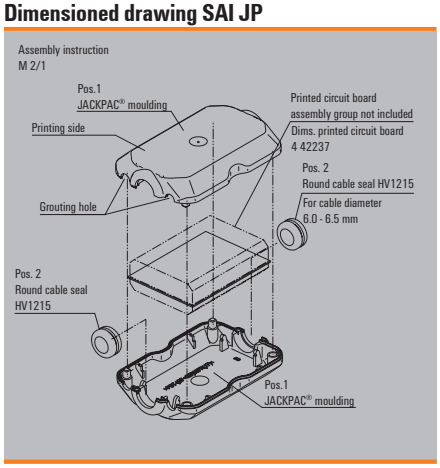


| Dimensions | | |
|---|---|---|
| Length x width x height | mm | 83 x 36 x 14.4 |

**Note**

## Dimensioned drawing, PCBs

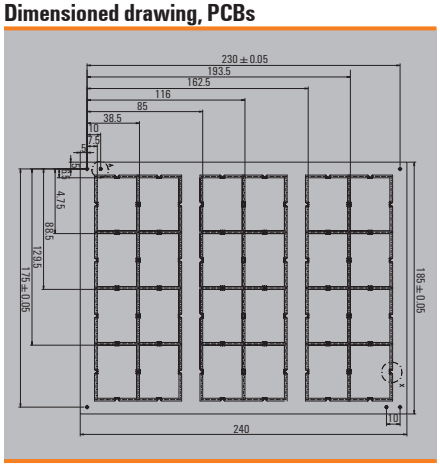


## Ordering data

| Housing with M12 connectors | | Type | No. of poles | Qty. | Order No. |
|---|---|---|---|---|---|
| Contents | 1 piece | SAI JP 4P LG | 4 | 1 | 1915220000 |
| | 1 piece | SAI JP 5P LG | 5 | 1 | 1918520000 |
| | 100 pieces | SAI JP 4P LG 100 | 4 | 1 | 8794090000 |
| | 100 pieces | SAI JP 5P LG 100 | 5 | 1 | 8794080000 |

**Note**

Housing without M12 connectors SAI JP FC SET 1933680000
1 Qty. = 100 pieces

## Accessories

# Passive distributors


| | | |
|---|---|---|
| **Passive distributors** | Introduction | I.2 |
| | M12 distributors | I.4 |
| | ECO modules | I.16 |
| | M12 Push-Pull | I.18 |
| | M12 IDC | I.26 |
| | M12 VA stainless steel | I.30 |
| | M12 metal distributors | I.32 |
| | M12 distributors 1:1 Passive | I.38 |
| | M12 Combi distributor | I.39 |
| | M12 distributor for NPN and PNP sensors | I.40 |
| | M12 wall bushing | I.41 |
| | Solutions to customer specification | I.44 |
| | M12 distributors accessories | I.45 |
| | M8 distributors | I.46 |
| | M5 distributors | I.56 |
| | M12 Ex i distributors | I.60 |

# SAI Passive

SAI Passive products are built with premium materials using the highest quality production methods. The fully encapsulated distributors are designed to meet harsh industrial requirements.  Naturally they have also been designed so that they are easy to handle. The self assembled connectors in the hooded version, for example, are joined into a single part so that the entire block is available for the connection. This is a unique solution for distributors that has no equal anywhere. Nothing can break off, get mixed up or wired up incorrectly.

The distributors are equipped by default with threaded metal rings. This ensures a very reliable screw-on connection. The nut is completely threaded without any interruptions. This eliminates the possibility of it getting stuck or jammed. The IDC versions are especially noteworthy. Sensor cables of the proper lengths can be connected directly here.

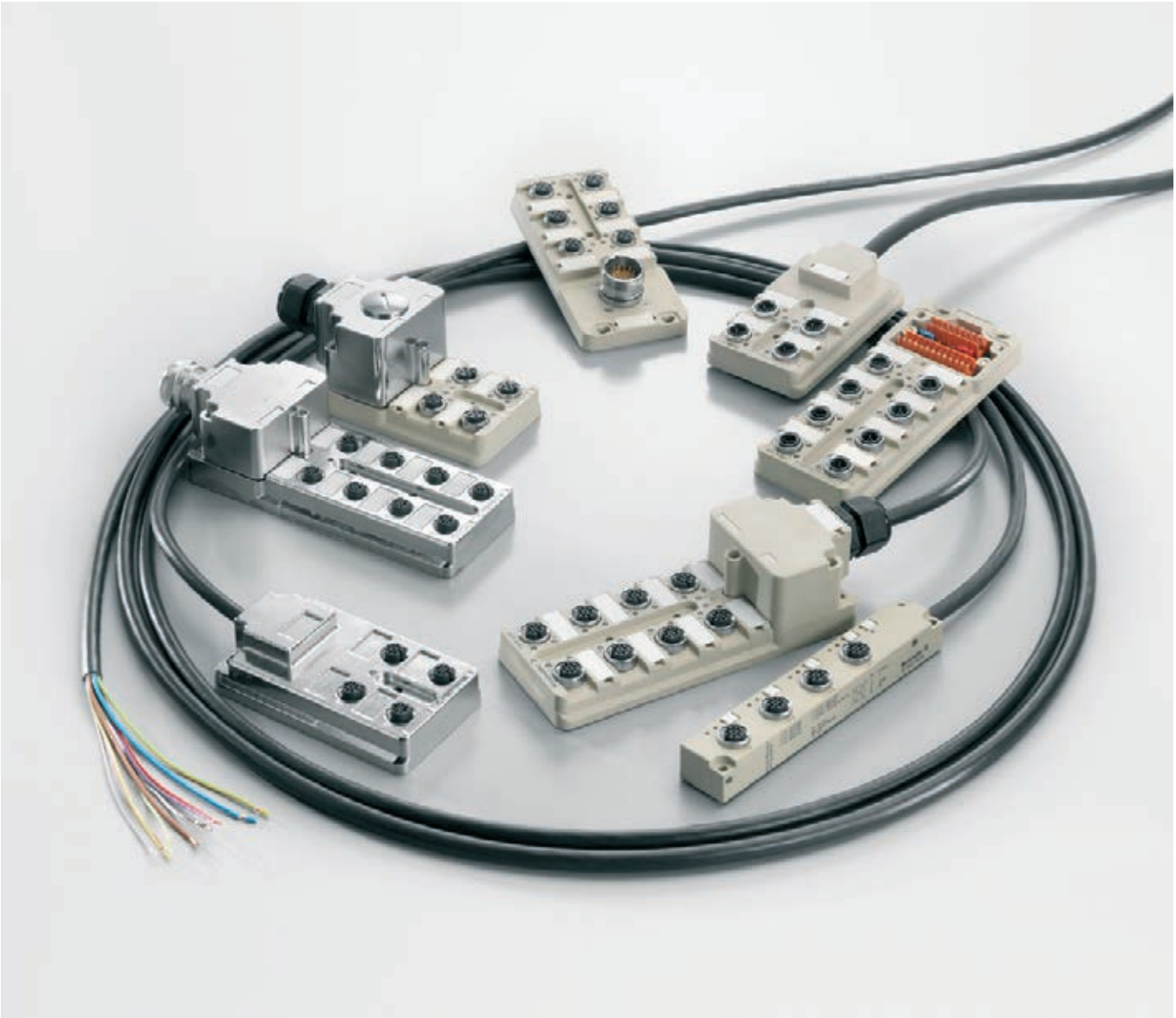

## Compact

The connection block is a single piece.

## Small

Extremely small M12 distributor

## Fast

Insulation displacement connection can be used to directly connect the sensor cables

## Robust

Threaded metal ring without cut outs for reliable, safe handling

**M12 distributor standard**

**M12 distributor with DIP switch coding**

**M12 distributor with stainless steel housing**

**M12 distributor for Zone 1**

# SAI distributor with plug in connection hood: SAI-M

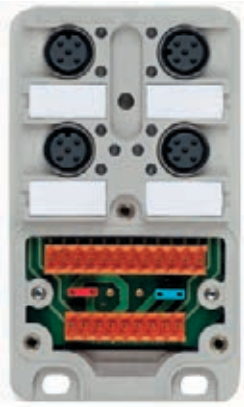

- Integrated plug in connector in connection hood
- M12 robust metal thread for sensor/actuator connection, now also available with plastic thread as an alternative
- Quick replacement of bus cables
- Bus cable can be supplied pre-assembled
- Two connection systems for bus cable: screw or tension clamp
- Very flat connection hood: no higher than smallest 90° M12 round plug
- Distributor and connection hood can be supplied separately
- Connection hood compatible with 4 and 8 channel SAI distributors (upgrades only entail changing the base module)
- IP 68 Ingress protection class (IDC IP 67),
- Housing made from Pocan® (PBT):
  – high dimensional stability
  – good electrical and mechanical properties
  – flame retardant without dioxin or furan formers
  – resistant to coolants and lubricants
- UL/CSA approvals for M12 SAI distributor
- SAI distributor available in pollution severity class 3
- Cable exit on top
- Weidmüller SAI distributors have the largest storage capacity in the connection hood
- Female connectors integrated into the metal plate for fast and reliable connections
- Wide range of M8 and M12 cables and plug-in connectors
- Various cable lengths available
- Metal hoods and housings also available
- Plug-in connection module for bus cables increases flexibility on site
- Integral, plug in electrical isolation for two separate electric circuits (e.g. for emergency stop)
- Simple and vibration resistant connections on site
- Captive metric screws (grade 8.8 steel) have a +/- head
- M12 and IDC connections
- 1:1 arrangement available

# Overview of M12 Distributors

**Fixed cable version**

- Pre-assembled bus cable minimises installation time and reduces wiring errors
- Cable carrier compatible versions are available with polyurethane (PUR) sheathing

**M12 Push-Pull quick-fit connection system**

M12 Push-Pull is the new connection system for sensors and actuators. It is downward compatible to the existing M12 system, which means that both old M12 and new M12 Push-Pull lines can be used together on these SAIs. M12 Push-Pull decreases installation time and increases installation safety by means of colour coding and provides an audible click on locking for added reassurance.

**SAI ECO – the cost-effective alternative**

Weidmüller SAI distributors with hood have long since been standard fittings in machines and installations.

**Why plastic threaded rings?**

There are some applications, however, that call for a further version. In some applications it is necessary to avoid all metal parts, unless these are made from stainless steel.
In such cases stainless steel is then used for screws and nuts only, but the M12 threaded rings can be made from plastic. Such modules can now be supplied on request.

The use of plastic rings results in a cheaper alternative. Although the service life and resistance are reduced when compared to metal, this is acceptable for some applications.

# Overview of SAI

## M12 Plastic

| | Hood | M23 | 5 m | 10 m | 15 m | 20 m |
|---|---|---|---|---|---|---|
| 4-way, 4-pole | 1705920000 | 9456000000 | 9456190000 | 9456200000 | 9456210000 | 9456230000 |
| 4-way, 5-pole | 1701230000 | 9456000001 | 9456330000 | 9456340000 | 9456350000 | 9456370000 |
| 6-way, 4-pole | 1705930000 | 9456010000 | 9456470000 | 9456480000 | 9456490000 | 9456510000 |
| 6-way, 5-pole | 1701240000 | 9456010001 | 9456610000 | 9456620000 | 9456630000 | 9456650000 |
| 8-way, 4-pole | 1705940000 | 9456020000 | 9456750000 | 9456760000 | 9456770000 | 9456790000 |
| 8-way, 5-pole | 1701250000 | 1795470000 | 9456890000 | 9456900000 | 9456910000 | 9456930000 |

## M12 Metal

| | Hood without shield connection | Hood with shield connection | 5 m | 10 m | | |
|---|---|---|---|---|---|---|
| 4-way, 4-pole | | 1783540000 | 9456190002 | 9456200002 | | |
| 4-way, 5-pole | 1783500000 | 1783520000 | | | | |
| 8-way, 4-pole | | 1783530000 | 9456750002 | 9456760002 | | |
| 8-way, 5-pole | 1783490000 | 1783510000 | | | | |

## M12 Line

| | M12 group outlet | | 5 m | 10 m | | |
|---|---|---|---|---|---|---|
| 4-way, 4-pole | 1267330000 | | 1070650000 | 1070660000 | | |
| 4-way, 5-pole | | | 1070630000 | 1070640000 | | |
| 6-way, 4-pole | 1265940000 | | 1265920000 | 1265930000 | | |

## M8 Line

| | M12 group outlet | Solder version for PCB | 5 m | 10 m | | |
|---|---|---|---|---|---|---|
| 4-way, 3-pole | 1828740000 | | 1828720000 | 1828710000 | | |
| 4-way, 4-pole | | | 1849680000 | 1849690000 | | |
| 6-way, 3-pole | 1828730000 | 1057720000 | 1828700000 | 1828690000 | | |
| 6-way, 4-pole | | | 1849700000 | 1849670000 | | |
| 8-way, 3-pole | 1871680000 | | 1828680000 | 1828670000 | | |
| 8-way, 4-pole | | | 1828620000 | 1828610000 | | |
| 10-way, 3-pole | 1877950000 | | 1828660000 | 1828650000 | | |
| 12-way, 3-pole | | | 1828640000 | 1828630000 | | |

## Hood version

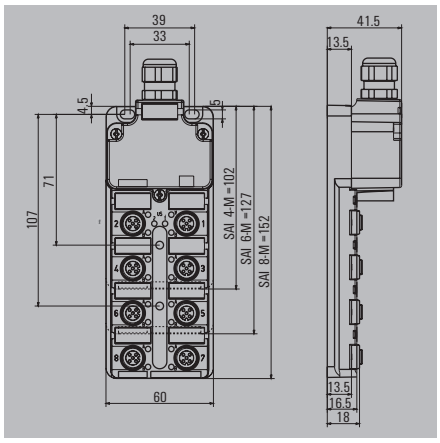


## Ordering data

| Complete modules | | SAI-4/6/8-M | | 4-pole | SAI-4/6/8-M | | 5-pole |
|---|---|---|---|---|---|---|---|
| | | Type | QTY | Order No. | Type | QTY | Order No. |
| | 4 channel | SAI-4-M 4P M12 | 1 | 1705920000 | SAI-4-M 5P M12 | 1 | 1701230000 |
| | 6 channel | SAI-6-M 4P M12 | 1 | 1705930000 | SAI-6-M 5P M12 | 1 | 1701240000 |
| | 8 channel | SAI-8-M 4P M12 | 1 | 1705940000 | SAI-8-M 5P M12 | 1 | 1701250000 |
| Without initiator-LED,for analogue signals | 4 channel | | | | SAI-4-M 5P M12 OL | 1 | 1800000000 |
| Without initiator-LED,for analogue signals | 8 channel | | | | SAI-8-M 5P M12 OL2 | 1 | 1816610000 |
| Tension-clamp connection | 4 plug-in slots | | | | SAI-4-M 5P M12 ZF | 1 | 1854000000 |
| Tension-clamp connection | 8 channel | | | | SAI-8-M 5P M12 ZF III | 1 | 1767880000 |
| **Base unit** | | | | | | | |
| | 4 channel | SAI-4 M 4P M12 UT | 2 | 1705921000 | SAI-4-M 5P M12 UT | 2 | 1701231000 |
| | 6 channel | SAI-6-M 4P M12 UT | 2 | 1705931000 | SAI-6-M 5P M12 UT | 2 | 1701241000 |
| | 8 channel | SAI-8-M 4P M12 UT | 2 | 1705941000 | SAI-8-M 5P M12 UT | 2 | 1701251000 |
| Without initiator-LED,for analogue signals | 8 channel | | | | SAI-8-M 5P M12 OL UT | 2 | 1740191000 |
| **Mounting hood** | | | | | | | |
| | Tension-clamp connection | SAI-4/6/8-MH BLZF3.5 | 1 | 1752080000 | SAI-4/6/8-MH BLZF3.5 | 1 | 1752080000 |
| | Tension clamp connection | SAI-4/6/8-MH BLZF3.5 SV | 50 | 1752080050 | SAI-4/6/8-MH BLZF3.5 SV | 50 | 1752080050 |
| | Screw connection | SAI-4/6/8-MH BL3.5 | 1 | 1724750000 | SAI-4/6/8-MH BL3.5 | 1 | 1724750000 |
| | Screw connection | SAI-4/6/8-MH BL3.5 SV | 50 | 1724750050 | SAI-4/6/8-MH BL3.5 SV | 50 | 1724750050 |
| | Empty | | | | SAI-4/6/8-MH LEER | 1 | 1783460000 |
| Complete modules,NPN-switched | 8 channel | | | | SAI-8-M 5P M12 NPN | 1 | 1781060000 |
| **Note** | | Other versions on request | | | Other versions on request | | |

## Technical data

| | |
|---|---|
| Operating voltage | 10...30 V |
| Current of continuous busbars | 2 A |
| max. current-carrying capacity per slot | 3 A |
| Total current | 10 A |
| Pollution severity | 3 |
| Protection degree | IP 68 |
| Ambient temperature range | -20...+90 °C |
| Housing main material | Pocan |
| Contact carrier material | PBT (UL 94 V0) |
| Base material of contacts | CuZn, pre-nickeled, gold-plated |
| screw socket | CuZn, nickel-plated |
| Housing colour | grey, RAL 7032 |
| Flammability class UL 94 | V-0 |
| Clamping range of hood-version | 0.08...1.5 mm² |
| Suitable for dragline cable (fixed cable connection) | |

With dual power supply: 2x8 = 16A total current
Clamping range up to 2.5 mm² with screw connection

## Wiring diagram

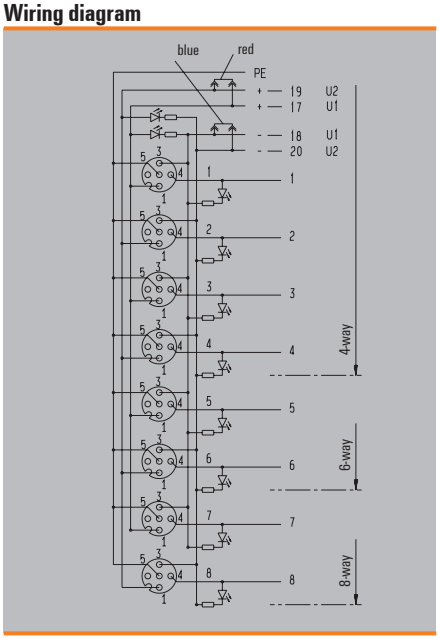


## Wiring diagram

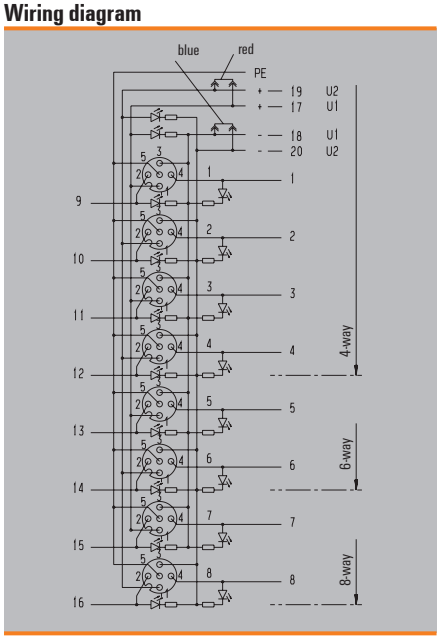

## Fixed cable version

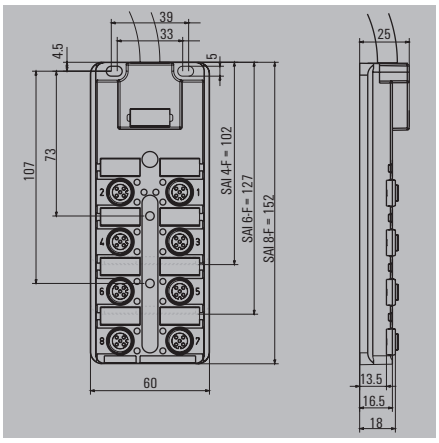


## Ordering data

| 4 channel | | SAI-4/6/8-F | | 4-pole | SAI-4/6/8-F | | 5-pole |
|---|---|---|---|---|---|---|---|
| | | Type | QTY | Order No. | Type | QTY | Order No. |
| | Cable length 3 m | SAI-4-F 4P PUR 3M | 1 | 9456180000 | SAI-4-F 5P PUR 3M | 1 | 9456320000 |
| | Cable length 5 m | SAI-4-F 4P PUR 5M | 1 | 9456190000 | SAI-4-F 5P PUR 5M | 1 | 9456330000 |
| | Cable length 10 m | SAI-4-F 4P PUR 10M | 1 | 9456200000 | SAI-4-F 5P PUR 10M | 1 | 9456340000 |
| | Cable length 15 m | SAI-4-F 4P PUR 15M | 1 | 9456210000 | SAI-4-F 5P PUR 15M | 1 | 9456350000 |
| | Cable length 20 m | SAI-4-F 4P PUR 20M | 1 | 9456230000 | SAI-4-F 5P PUR 20M | 1 | 9456370000 |
| **6 channel** | | | | | | | |
| | Cable length 3 m | SAI-6-F 4P PUR 3M | 1 | 9456460000 | SAI-6-F 5P PUR 3M | 1 | 9456600000 |
| | Cable length 5 m | SAI-6-F 4P PUR 5M | 1 | 9456470000 | SAI-6-F 5P PUR 5M | 1 | 9456610000 |
| | Cable length 10 m | SAI-6-F 4P PUR 10M | 1 | 9456480000 | SAI-6-F 5P PUR 10M | 1 | 9456620000 |
| | Cable length 15 m | SAI-6-F 4P PUR 15M | 1 | 9456490000 | SAI-6-F 5P PUR 15M | 1 | 9456630000 |
| | Cable length 20 m | SAI-6-F 4P PUR 20M | 1 | 9456510000 | SAI-6-F 5P PUR 20M | 1 | 9456650000 |
| **8 channel** | | | | | | | |
| | Cable length 3 m | SAI-8-F 4P PUR 3M | 1 | 9456740000 | SAI-8-F 5P PUR 3M | 1 | 9456880000 |
| | Cable length 5 m | SAI-8-F 4P PUR 5M | 1 | 9456750000 | SAI-8-F 5P PUR 5M | 1 | 9456890000 |
| | Cable length 10 m | SAI-8-F 4P PUR 10M | 1 | 9456760000 | SAI-8-F 5P PUR 10M | 1 | 9456900000 |
| | Cable length 15 m | SAI-8-F 4P PUR 15M | 1 | 9456770000 | SAI-8-F 5P PUR 15M | 1 | 9456910000 |
| | Cable length 20 m | SAI-8-F 4P PUR 20M | 1 | 9456790000 | SAI-8-F 5P PUR 20M | 1 | 9456930000 |
| **8 channel with reinforced fixed cable*** | | | | | | | |
| | Cable length 2 m | | | | SAI-8-F 5P 2M 0.5/1.0U | 1 | 7915030000 |
| | Cable length 5 m | | | | SAI-8-F 5P 5M 0.5/1.0U | 1 | 9457590000 |
| | Cable length 10 m | | | | SAI-8-F 5P 10M 0.5/1.0U | 1 | 9457600000 |
| | Cable length 15 m | | | | SAI-8-F 5P 15M 0.5/1.0U | 1 | 1784510000 |
| | Cable length 20 m | | | | SAI-8-F 5P 20M 0.5/1.0U | 1 | 1784500000 |
| **Note** | | Other versions on request | | | Other versions on request | | |

## Technical data

| | |
|---|---|
| Operating voltage | 10...30 V |
| Current of continuous busbars | 2 A |
| max. current-carrying capacity per slot | 3 A |
| Total current | 9 A |
| Pollution severity | 3 |
| Protection degree | IP 68 |
| Ambient temperature range | -20...+80 °C |
| Housing main material | Pocan |
| Contact carrier material | PBT (UL 94 V0) |
| Base material of contacts | CuZn, pre-nickeled, gold-plated |
| screw socket | CuZn, nickel-plated |
| Housing colour | grey, RAL 7032 |
| Flammability class UL 94 | V-0 |
| Clamping range of hood-version | |
| Suitable for dragline cable (fixed cable connection) | Yes |

* 3x1mm² und 16x0.5mm² total current 12A

## Wiring diagram

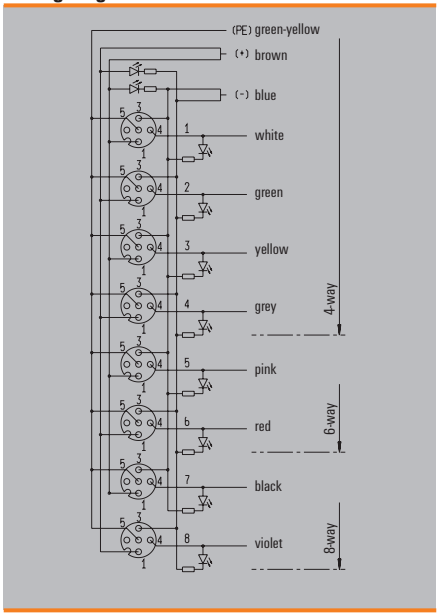


## Wiring diagram

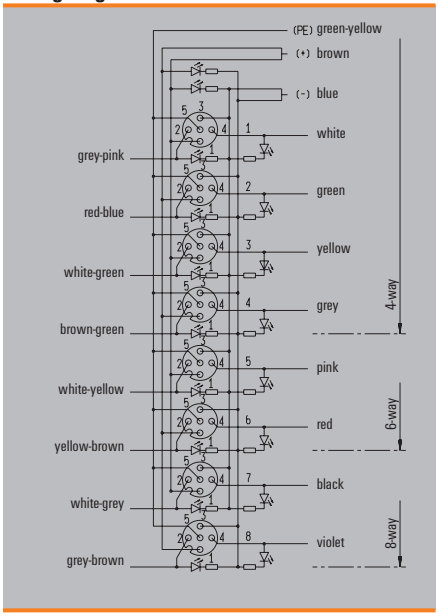

## Fixed cable version
## Thin design

### SAI-4-F M12 L

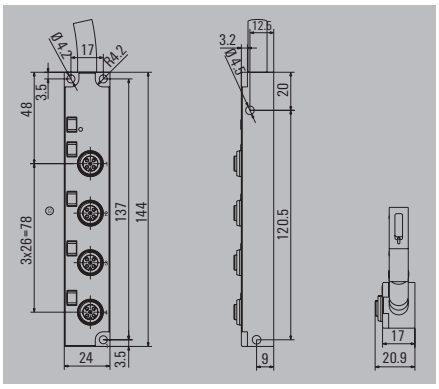


### SAI-4-F M12 L

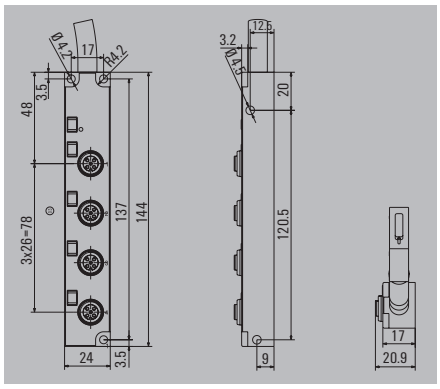


## Ordering data

| 4 channel | | | |
|---|---|---|---|
| | Cable length 5 m | | |
| | Cable length 10 m | | |
| **Note** | | | |

### SAI-4-F M12 L

| | | 4-pole |
|---|---|---|
| **Type** | **QTY** | **Order No.** |
| SAI-4-F 4P M12 L 5M | 1 | **1070650000** |
| SAI-4-F 4P M12 L 10M | 1 | **1070660000** |
| Other versions on request | | |

| | | 5-pole |
|---|---|---|
| **Type** | **QTY** | **Order No.** |
| SAI-4-F 5P M12 L 5M | 1 | **1070630000** |
| SAI-4-F 5P M12 L 10M | 1 | **1070640000** |
| Other versions on request | | |

## Technical data

| | |
|---|---|
| Operating voltage | 10...30 V |
| Current of continuous busbars | 2 A |
| max. current-carrying capacity per slot | 3 A |
| Total current | 9 A |
| Pollution severity | 3 |
| Protection degree | IP 68 |
| Ambient temperature range | -20...+80 °C |
| Housing main material | PA 6 GF |
| Contact carrier material | PBT (UL 94 V0) |
| Base material of contacts | CuZn, pre-nickeled, gold-plated |
| screw socket | CuZn, nickel-plated |
| Housing colour | grey, RAL 7032 |
| Flammability class UL 94 | V-0 |
| Clamping range of hood-version | |
| Suitable for dragline cable (fixed cable connection) | Yes |

## Dimensioned drawing

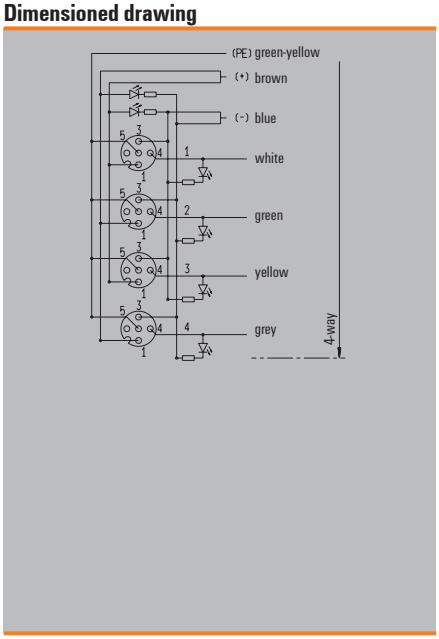


## Dimensioned drawing

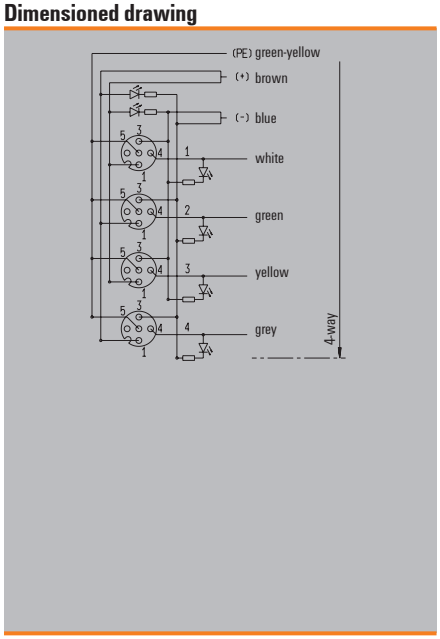

## Fixed cable version
## Thin design

### SAI-6-F M12 L

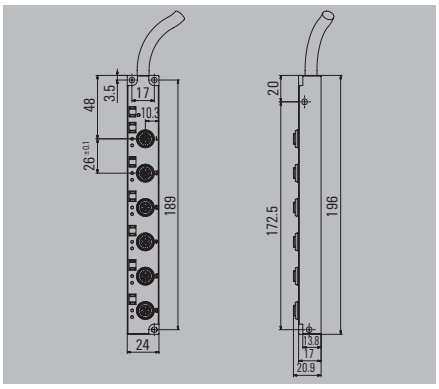


## Ordering data

| 4 channel | |
|---|---|
| Cable length 5 m | |
| Cable length 10 m | |
| **Note** | |

### SAI-6-F M12 L — 4-pole

| Type | QTY | Order No. |
|---|---|---|
| SAI-6-F 4P M12 L 5M | 1 | 1265920000 |
| SAI-6-F 4P M12 L 10M | 1 | 1265930000 |

## Technical data

| | |
|---|---|
| Operating voltage | 10...30 V |
| Current of continuous busbars | 2 A |
| max. current-carrying capacity per slot | 3 A |
| Total current | 9 A |
| Pollution severity | 3 |
| Protection degree | IP 68 |
| Ambient temperature range | -20...+80 °C |
| Housing main material | PA 6 GF |
| Contact carrier material | PBT (UL 94 V0) |
| Base material of contacts | CuZn, pre-nickeled, gold-plated |
| screw socket | CuZn, nickel-plated |
| Housing colour | grey, RAL 7032 |
| Flammability class UL 94 | V-0 |
| Clamping range of hood-version | |
| Suitable for dragline cable (fixed cable connection) | Yes |

## Dimensioned drawing

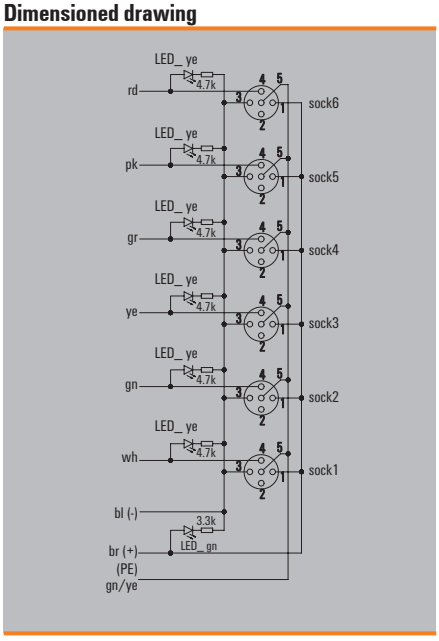

## Line

### SAI-4-S

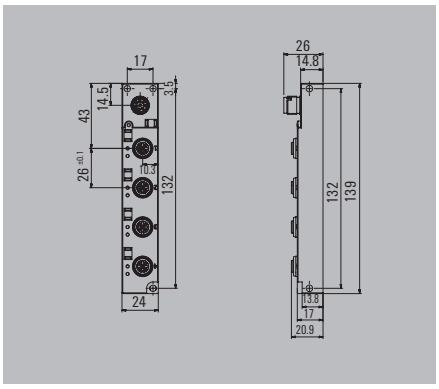


### SAI-6-S

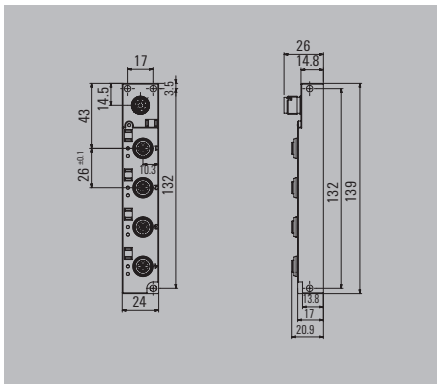


## Ordering data

| 3-pole | | |
|---|---|---|
| | | 4 channel |
| **Note** | | |

### SAI-4-S

| | | M12 |
|---|---|---|
| **Type** | **QTY** | **Order No.** |
| SAI-4-S8 4P M12 L | 1 | **1267330000** |

| | | M12 |
|---|---|---|
| **Type** | **QTY** | **Order No.** |
| SAI-6-S12 4P M12 L | 1 | **1265940000** |

## Technical data

| | |
|---|---|
| Operating voltage | 10...30 V |
| Current of continuous busbars | 1 A |
| max. current-carrying capacity per slot | 2 A |
| Total current | 6 A |
| Pollution severity | 3 |
| Protection degree | IP 68 |
| Ambient temperature range | -20 ...+80 °C |
| Housing main material | Pocan |
| Contact carrier material | PBT (UL 94 V0) |
| Base material of contacts | CuZn, pre-nickeled, gold-plated |
| screw socket | CuZn, nickel-plated |
| Housing colour | grey, RAL 7032 |
| Flammability class UL 94 | V-0 |
| Clamping range of hood-version | |
| Suitable for dragline cable (fixed cable connection) | |

## Dimensioned drawing

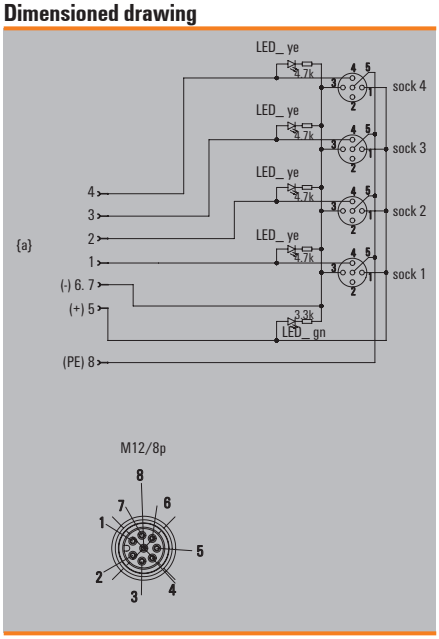


## Dimensioned drawing

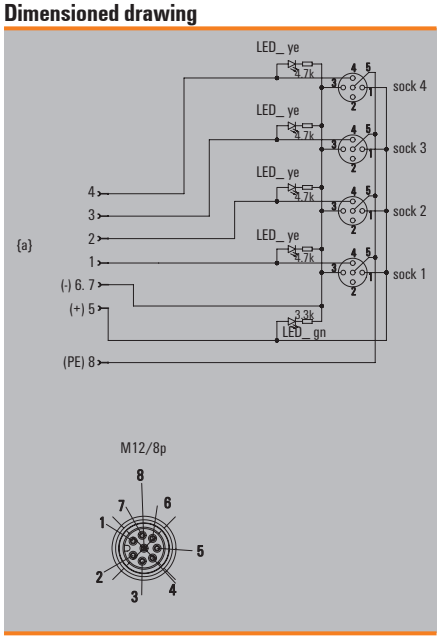

# M12 distributors

## with M23 outlet

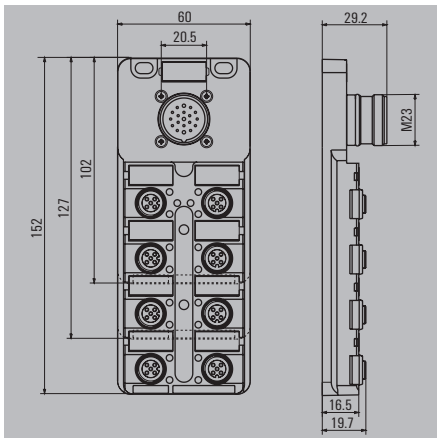


## Ordering data

| Complete modules | | | |
|---|---|---|---|
| | 4 channel | | |
| | 6 channel | | |
| | 8 channel | | |
| **Note** | | | |

| SAI-4/6/8-S | | 4-pole |
|---|---|---|
| **Type** | **QTY** | **Order No.** |
| SAI-4-S 4P M12 | 1 | **9456000000** |
| SAI-6-S 4P M12 | 1 | **9456010000** |
| SAI-8-S 4P M12 | 1 | **9456020000** |
| Other versions on request | | |

| SAI-4/6/8-S | | 5-pole |
|---|---|---|
| **Type** | **QTY** | **Order No.** |
| SAI-4-S 5P M12 | 1 | **9456000001** |
| SAI-6-S 5P M12 | 1 | **9456010001** |
| SAI-8-S 5P M12 | 1 | **1795470000** |
| Other versions on request | | |



## Technical data

| | |
|---|---|
| Operating voltage | 10...30 V |
| Current of continuous busbars | 2 A |
| max. current-carrying capacity per slot | 3 A |
| Total current | 10 A |
| Pollution severity | 3 |
| Protection degree | IP 68 |
| Ambient temperature range | -20...+90 °C |
| Housing main material | Pocan |
| Contact carrier material | PBT (UL 94 V0) |
| Base material of contacts | CuZn, pre-nickeled, gold-plated |
| screw socket | CuZn, nickel-plated |
| Housing colour | grey, RAL 7032 |
| Flammability class UL 94 | V-0 |
| Clamping range of hood-version | |
| Suitable for dragline cable (fixed cable connection) | |

## Wiring diagram

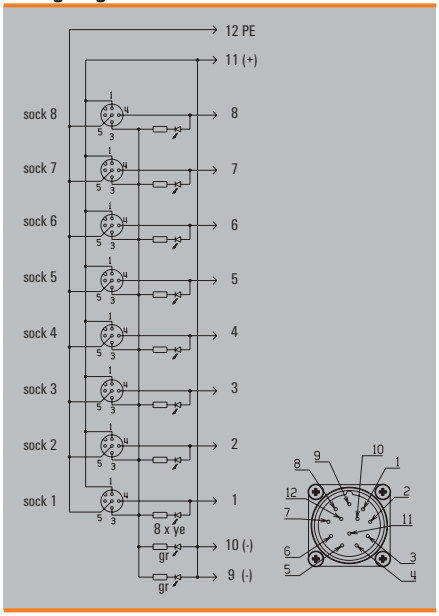


## Wiring diagram

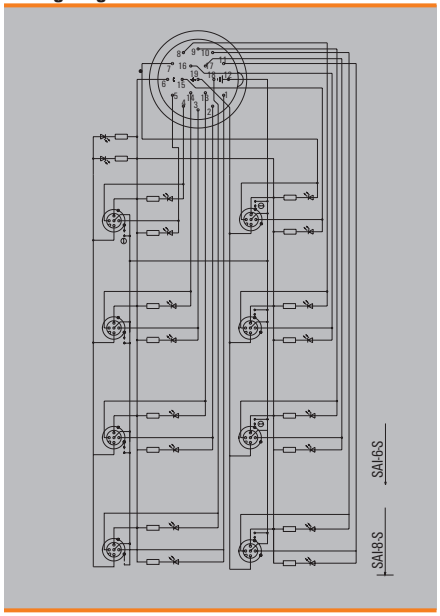

## with M16 outlet

## SAI-8-M16

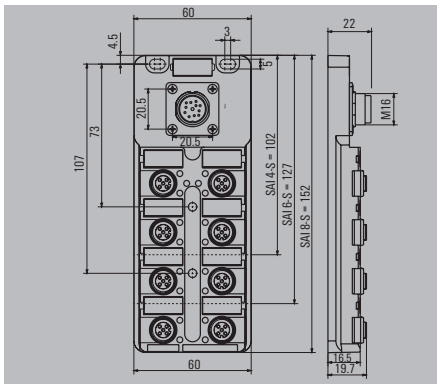


## Ordering data

| Complete modules | |
|---|---|
| | 8 channel |
| **Note** | |

## SAI-8-M16

| Type | QTY | Order No. |
|---|---|---|
| | | 4-pole |
| SAI-8-M16 4P M12 | 1 | 1831020000 |
| Other versions on request | | |

## Technical data

| | |
|---|---|
| Operating voltage | 10...30 V |
| Current of continuous busbars | 2 A |
| max. current-carrying capacity per slot | 3 A |
| Total current | 6 A |
| Pollution severity | 3 |
| Protection degree | IP 67 |
| Ambient temperature range | -20...+90 °C |
| Housing main material | Pocan |
| Contact carrier material | PBT (UL 94 V0) |
| Base material of contacts | CuZn, pre-nickeled, gold-plated |
| screw socket | CuZn, nickel-plated |
| Housing colour | grey, RAL 7032 |
| Flammability class UL 94 | V-0 |
| Clamping range of hood-version | |
| Suitable for dragline cable (fixed cable connection) | |

## Dimensioned drawing

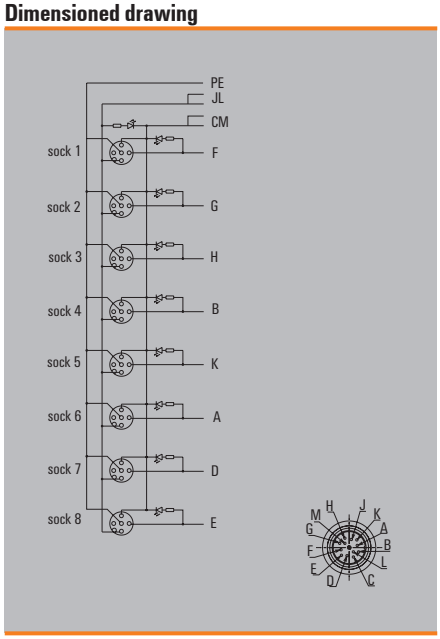

## Hood version
## with DIP-switch coding

### SAI-8-M M12 DIP

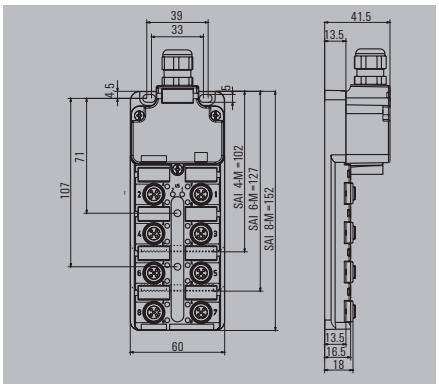


## Ordering data

| SAI-8-M M12 DIP | | 4-pole |
|---|---|---|
| **Complete modules** | | |
| | | 8 channel |
| **Type** | **QTY** | **Order No.** |
| SAI-8-M-4P M12 DIP | 1 | **1059430000** |
| **Note** | | |
| Other versions on request | | |

## Technical data

| | |
|---|---|
| Operating voltage | 10...30 V |
| Current of continuous busbars | 2 A |
| max. current-carrying capacity per slot | 3 A |
| Total current | 8 A |
| Pollution severity | 3 |
| Protection degree | IP 68 |
| Ambient temperature range | -20...+90 °C |
| Housing main material | Pocan |
| Contact carrier material | PBT (UL 94 V0) |
| Base material of contacts | CuZn, pre-nickeled, gold-plated |
| screw socket | CuZn, nickel-plated |
| Housing colour | grey, RAL 7032 |
| Flammability class UL 94 | V-0 |
| Clamping range of hood-version | 0.08...1.5 mm² |
| Suitable for dragline cable (fixed cable connection) | |

## Dimensioned drawing

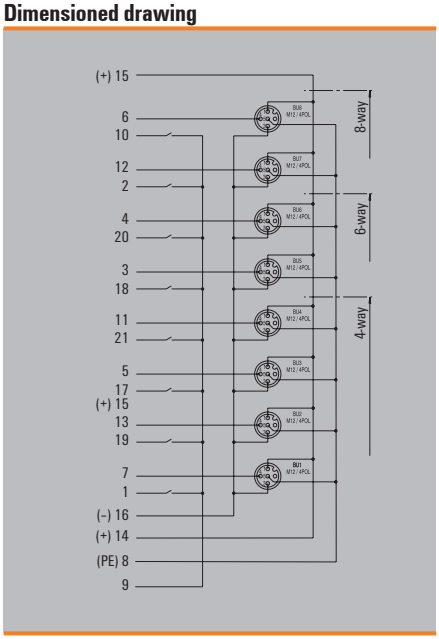

# SAI ECO

### SAI ECO – the cost-effective alternative

The Weidmüller SAI distributors with hoods have long since been standard fittings in machines and installations.

### Why plastic threaded rings?

There are some applications, however, that call for a further version. In some applications it is necessary to avoid all metal parts. In such cases stainless steel is then used for screws and nuts only, but the M12 threaded rings can be made from plastic. Such modules can now be supplied on request.

The use of plastic rings results in a cheaper alternative. Although the service life and resistance are reduced when compared to metal, this is acceptable for some applications.

**Special threaded ring increases durability**

### Cost-effective alternative

The ECO modules were initially developed to optimise costs. Many details of these modules were adapted in such a way that they can still be used wherever standard modules were used in the past, but the individual solutions have now become simpler:

- Markers: Markers clipped onto the module can no longer be printed with a identification system. It is easier to simply order the markers with the required printing from us. The markers in the proven MultiCard format are printed with our PrintJetPro Printer.
- One way disconnector: Up until now it was usual to achieve electrical isolation devised by Weidmüller by way of jumpers. To reduce costs, these jumpers have been replaced by solder bridges. These are simply cut to provide electrical isolation.
- No protective caps: Normally, Weidmüller M12 distributors are always supplied with two protective caps. These were not always required and so they have been omitted.
- Standard cable gland: The vibration resistant black screw cable gland has been replaced by a standard IP 68 cable gland.

These cost-cutting measures result in yet more applications for Weidmüller SAI distributors.

### Greater reliability than with comparable systems

Plastic threaded rings are nothing new. However, the problem in the past was that the threaded rings formed part of the housing and were therefore made from the same plastic.

Weidmüller has once again pioneered a new and better solution. Weidmüller plastic rings are manufactured separately, which means that a more suitable, more durable material can be chosen. The Weidmüller production method is also patented.

## Hood version

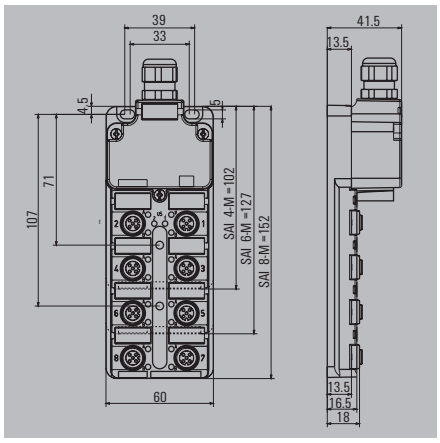


## Ordering data

| Complete modules | | SAI-4/6/8-M | | 5-pole |
|---|---|---|---|---|
| | | **Type** | **QTY** | **Order No.** |
| | 4 channel | SAI-4-M 5P M12 ECO | 1 | **1892100000** |
| | 6 channel | SAI-6-M 5P M12 ECO | 1 | **1892090000** |
| | 8 channel | SAI-8-M 5P M12 ECO | 1 | **1892080000** |
| NPN | 4 channel | SAI-4-M 5P M12 NPN ECO | 1 | **1892100005** |
| NPN | 8 channel | SAI-8-M 5P M12 NPN ECO | 1 | **1892080005** |
| **Base unit** | | | | |
| | 4 channel | SAI-4-M 5P M12 ECO UT | 2 | **1892101000** |
| | 6 channel | SAI-6-M 5P M12 ECO UT | 2 | **1892091000** |
| | 8 channel | SAI-8-M 5P M12 ECO UT | 2 | **1892081000** |
| **Mounting hood** | | | | |
| | Tension clamp connection | SAI-4/6/8-MH BLZF3.5 SV | 50 | **1752080050** |
| | Screw connection | SAI-4/6/8-MH BL3.5 SV | 50 | **1724750050** |
| **Note** | | These distributors are supplied without protective caps and markers. | | |

| Type | QTY | Order No. |
|---|---|---|
| | | |
| | | |
| | | |
| | | |
| | | |
| | | |
| | | |
| | | |
| | | |
| | | |
| | | |

## Technical data

| | |
|---|---|
| Operating voltage | 10...30 V |
| Current of continuous busbars | 2 A |
| max. current-carrying capacity per slot | 3 A |
| Total current | 10 A |
| Pollution severity | 3 |
| Protection degree | IP 68 |
| Ambient temperature range | -20...+90 °C |
| Housing main material | Pocan |
| Contact carrier material | PBT (UL 94 V0) |
| Base material of contacts | CuZn, pre-nickeled, gold-plated |
| screw socket | Pocan |
| Housing colour | grey, RAL 7032 |
| Flammability class UL 94 | V-0 |
| Clamping range of hood-version | 0.08...1.5 mm² |
| Suitable for dragline cable (fixed cable connection) | |

With dual power supply: 2x8 = 16A total current
Clamping range up to 2.5 mm² with screw connection

## Wiring diagram

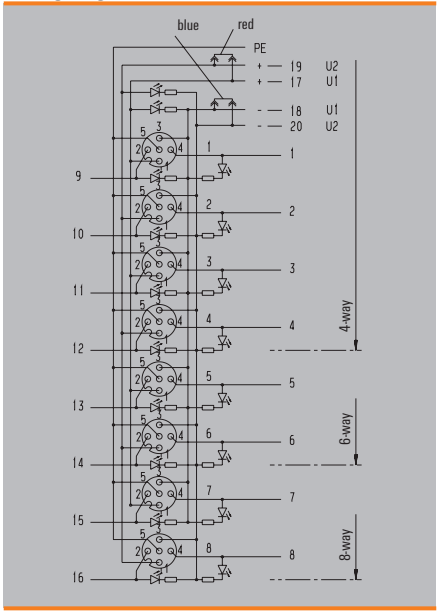

# M12 Push-Pull: SAI distributors and cables, with rapid-connection technology

## SAI distributors with M12 Push-Pull plug

## M12 Push-Pull M23 versions

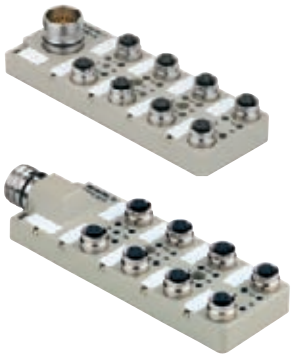

## M12 Push-Pull hood version

## M12 Push-Pull with bayonet connection

Whereas the standard M12 system requires the sleeves to be laboriously screwed on and that operation is hindered by the vibration guard, M12 Push-Pull works with one click, just like those well-known garden hose systems. The audible locking function guarantees a safe and reliable connection as well as a good seal.

M12 Push-Pull is currently supplied by Weidmüller and five other international companies.

M12 Push-Pull connections provide sufficient space for using T-pieces. The SAI module is slimmer and now only 54 mm wide.

The new SAI M12 Push-Pull distributors can be used with M12 plug-in connectors but also with the new M12 Push-Pull plug-in connectors.

The SAI distributors are available in fixed cable, hood, bayonet connection and M23 versions.

M12 Push-Pull speeds up installation and increases installation reliability thanks to the colour coding and the audible click when locking it into place.

## Fixed cable version

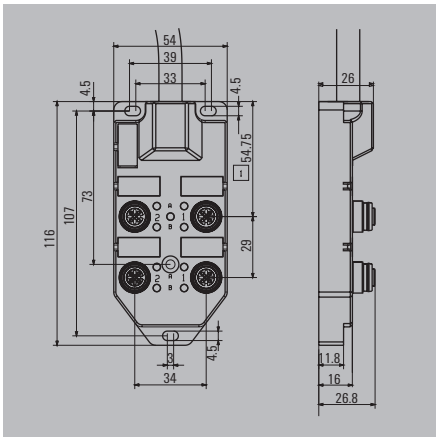


## Ordering data

| 4 channel | | | |
|---|---|---|---|
| | Cable length 2 m | | |
| | Cable length 5 m | | |
| | Cable length 10 m | | |
| **8 channel** | | | |
| | Cable length 2 m | | |
| | Cable length 5 m | | |
| | Cable length 10 m | | |
| **Note** | | | |

| SAI-4/8-F | | 4-pole |
|---|---|---|
| **Type** | **QTY** | **Order No.** |
| SAI-4-F 4P FC 2M | 1 | **1848080000** |
| SAI-4-F 4P FC 5M | 1 | **1848060000** |
| SAI-4-F 4P FC 10M | 1 | **1848050000** |
| | | |
| SAI-8-F 4P FC 2M | 1 | **1847990000** |
| SAI-8-F 4P FC 5M | 1 | **1848000000** |
| SAI-8-F 4P FC 10M | 1 | **1847980000** |
| Other versions on request | | |

| SAI-4/8-F | | 5-pole |
|---|---|---|
| **Type** | **QTY** | **Order No.** |
| SAI-4-F 5P FC 2M | 1 | **1847940000** |
| SAI-4-F 5P FC 5M | 1 | **1847950000** |
| SAI-4-F 5P FC 10M | 1 | **1847930000** |
| | | |
| SAI-8-F 5P FC 2M | 1 | **1848020000** |
| SAI-8-F 5P FC 5M | 1 | **1848030000** |
| SAI-8-F 5P FC 10M | 1 | **1848010000** |
| Other versions on request | | |

## Technical data

| | |
|---|---|
| Operating voltage | 10...30 V |
| Current of continuous busbars | 2 A |
| max. current-carrying capacity per slot | 4 A |
| Total current | 10 A |
| Pollution severity | 3 |
| Protection degree | IP 67 |
| Ambient temperature range | -25...+80 °C |
| Housing main material | PA 6 GF |
| Contact carrier material | PBT (UL 94 V0) |
| Base material of contacts | CuZn, pre-nickeled, gold-plated |
| screw socket | CuZn, nickel-plated |
| Housing colour | grey, RAL 7032 |
| Flammability class UL 94 | V-0 |
| Clamping range of hood-version | |
| Suitable for dragline cable (fixed cable connection) | Yes |

Master trunk cable 3x1mm² x n x 0.34mm²; Hallogen

## Wiring diagram

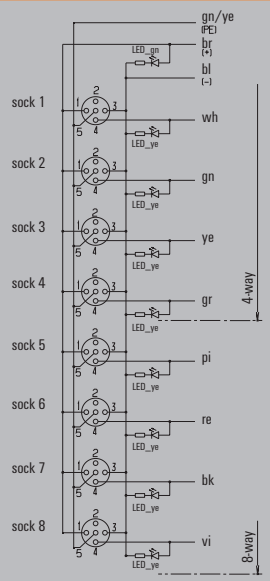


## Wiring diagram

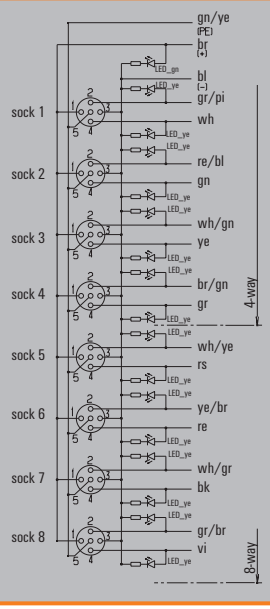

## M12 Push-Pull

### with M23 outlet

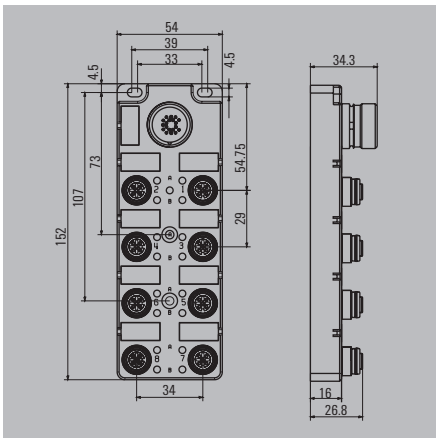


### Ordering data

| Complete modules | |
|---|---|
| 4 channel | |
| 8 channel | |
| **Note** | |

| SAI-4/8-S | | 4-pole |
|---|---|---|
| **Type** | **QTY** | **Order No.** |
| SAI-4-S 4P FC | 1 | **1847960000** |
| SAI-8-S 4P FC | 1 | **1847920000** |
| Other versions on request | | |

| SAI-4/8-S | | 5-pole |
|---|---|---|
| **Type** | **QTY** | **Order No.** |
| SAI-4-S 5P FC | 1 | **1847970000** |
| SAI-8-S 5P FC | 1 | **1848040000** |
| Other versions on request | | |

### Technical data

| | |
|---|---|
| Operating voltage | 10...30 V |
| Current of continuous busbars | 2 A |
| max. current-carrying capacity per slot | 4 A |
| Total current | 9 A |
| Pollution severity | 3 |
| Protection degree | IP 67 |
| Ambient temperature range | -25...+80 °C |
| Housing main material | PA 6 GF |
| Contact carrier material | PBT (UL 94 V0) |
| Base material of contacts | CuZn, pre-nickeled, gold-plated |
| screw socket | CuZn, nickel-plated |
| Housing colour | grey, RAL 7032 |
| Flammability class UL 94 | V-0 |
| Clamping range of hood-version | |
| Suitable for dragline cable (fixed cable connection) | |

### Wiring diagram

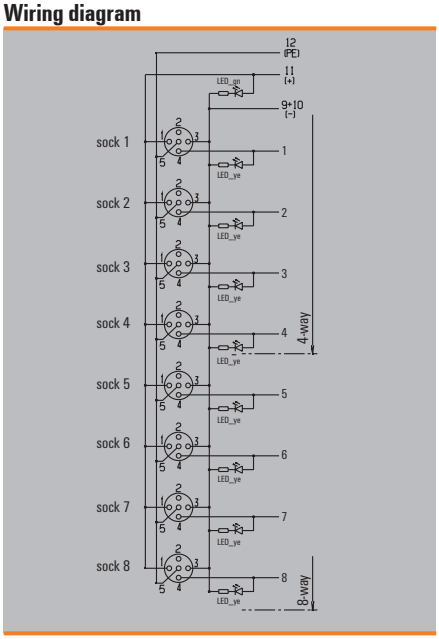


### Wiring diagram

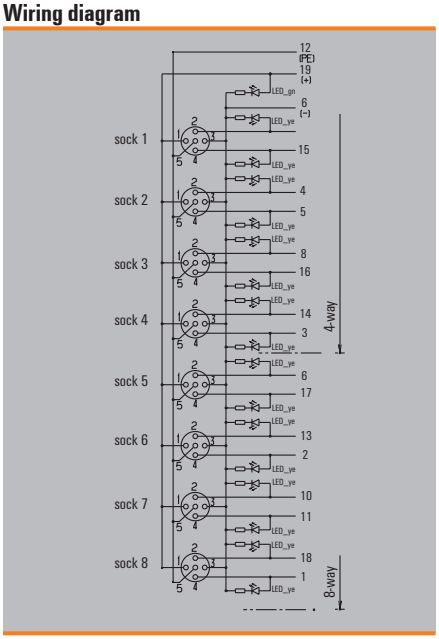

## with M23 outlet on front

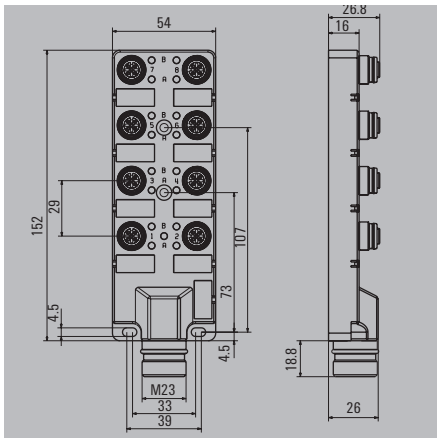


## Ordering data

| Complete modules | | | |
|---|---|---|---|
| | 4 channel | | |
| | 8 channel | | |
| **Note** | | | |

### SAI-4/8-SH — 4-pole

| Type | QTY | Order No. |
|---|---|---|
| SAI-4-SH 4P FC | 1 | 1859110000 |
| SAI-8-SH 4P FC | 1 | 1859120000 |

### SAI-4/8-SH — 5-pole

| Type | QTY | Order No. |
|---|---|---|
| SAI-4-SH 5P FC | 1 | 1859130000 |
| SAI-8-SH 5P FC | 1 | 1859140000 |

## Technical data

| | |
|---|---|
| Operating voltage | 10...30 V |
| Current of continuous busbars | 2 A |
| max. current-carrying capacity per slot | 4 A |
| Total current | 9 A |
| Pollution severity | 3 |
| Protection degree | IP 67 |
| Ambient temperature range | -25...+80 °C |
| Housing main material | PA 6 GF |
| Contact carrier material | PBT (UL 94 V0) |
| Base material of contacts | CuZn, pre-nickeled, gold-plated |
| screw socket | CuZn, nickel-plated |
| Housing colour | grey, RAL 7032 |
| Flammability class UL 94 | V-0 |
| Clamping range of hood-version | |
| Suitable for dragline cable (fixed cable connection) | |

## Wiring diagram

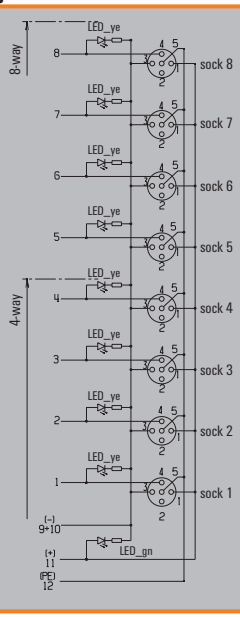


## Wiring diagram

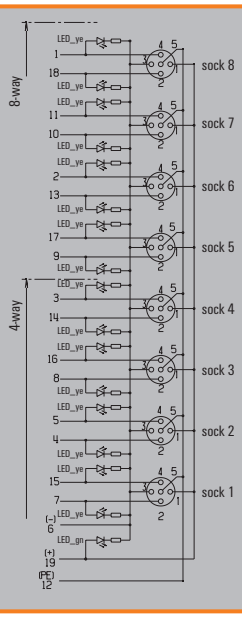

## Hood version

### SAI-8-M

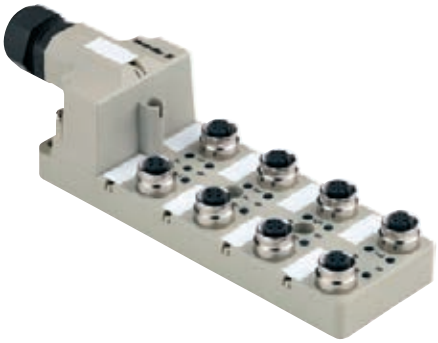

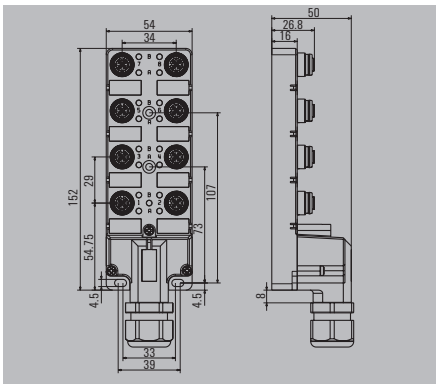


## Ordering data

| Complete modules | |
|---|---|
| | 8 channel |
| **Note** | |

### SAI-8-M — 5-pole

| Type | QTY | Order No. |
|---|---|---|
| SAI-8-M 5P FC | 1 | 1848070000 |

Other versions on request

## Technical data

| | |
|---|---|
| Operating voltage | 10...30 V |
| Current of continuous busbars | 2 A |
| max. current-carrying capacity per slot | 4 A |
| Total current | |
| Pollution severity | 3 |
| Protection degree | IP 67 |
| Ambient temperature range | -25...+80 °C |
| Housing main material | PA 6 GF |
| Contact carrier material | PBT (UL 94 V0) |
| Base material of contacts | CuZn, pre-nickeled, gold-plated |
| screw socket | CuZn, nickel-plated |
| Housing colour | grey, RAL 7032 |
| Flammability class UL 94 | V-0 |
| Clamping range of hood-version | |
| Suitable for dragline cable (fixed cable connection) | |

Master trunk cable 3x1mm² x n x 0.34mm²; halogen-free

## Dimensioned drawing

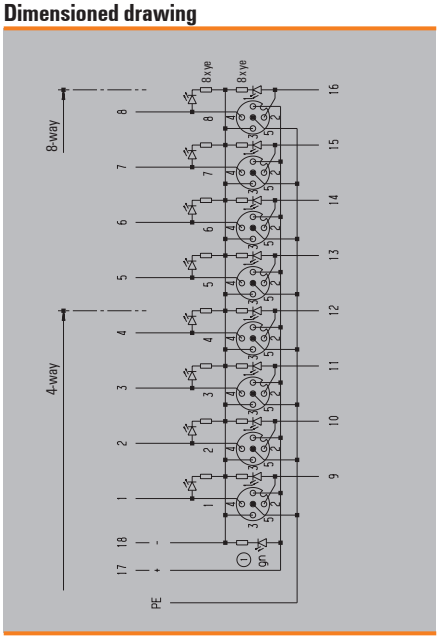


| Terminal | Slot M12 | Contact | Colour |
|---|---|---|---|
| 1 | 1 | 4 | white |
| 2 | 2 | 4 | green |
| 3 | 3 | 4 | yellow |
| 4 | 4 | 4 | grey |
| 5 | 5 | 4 | pink |
| 6 | 6 | 4 | red |
| 7 | 7 | 4 | black |
| 8 | 8 | 4 | violet |
| 9 | 1 | 2 | grey/pink |
| 10 | 2 | 2 | red/blue |
| 11 | 3 | 2 | white/green |
| 12 | 4 | 2 | brown/green |
| 13 | 5 | 2 | white/yellow |
| 14 | 6 | 2 | yellow/brown |
| 15 | 7 | 2 | white/grey |
| 16 | 8 | 2 | grey/brown |
| 17 | 1-8 | 1 | brown (+) |
| 18 | 1-8 | 3 | blue (–) |
| PE | 1-8 | 5 | green/yellow (PE) |

## CNOMO

### SAI-4/8-S

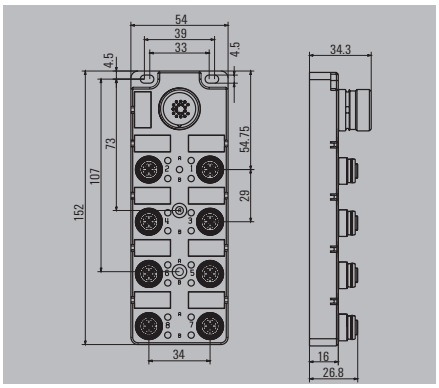


### SAI-4/8-F

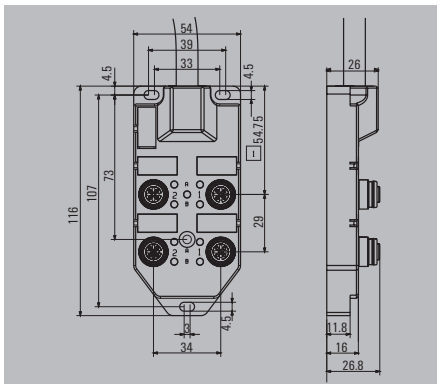


## Ordering data

| 4 channel | | SAI-4/8-S Type | QTY | 5-pole Order No. | Type | QTY | 5-pole Order No. |
|---|---|---|---|---|---|---|---|
| | Cable length 5 m | | | | SAI-4-F 5P CNOMO 5M | 1 | 1861570000 |
| | Cable length 10 m | | | | SAI-4-F 5P CNOMO 10M | 1 | 1861560000 |
| **8 channel** | | | | | | | |
| | Cable length 5 m | | | | SAI-8-F 5P CNOMO 5M | 1 | 1861550000 |
| | Cable length 10 m | | | | SAI-8-F 5P CNOMO 10M | 1 | 1861590000 |
| **M23** | | | | | | | |
| | 4 channel | SAI-4-S 5P CNOMO | 1 | 1861540000 | | | |
| | 8 channel | SAI-8-S 5P CNOMO | 1 | 1861580000 | | | |
| **Note** | | | | | | | |

## Technical data

| | |
|---|---|
| Operating voltage | 10...50 V |
| Current of continuous busbars | 2 A |
| max. current-carrying capacity per slot | 4 A |
| Total current | 8 A |
| Pollution severity | 3 |
| Protection degree | IP 67 |
| Ambient temperature range | -25...+80 °C |
| Housing main material | PA 6 GF |
| Contact carrier material | PBT (UL 94 V0) |
| Base material of contacts | CuZn, pre-nickeled, gold-plated |
| screw socket | CuZn, nickel-plated |
| Housing colour | grey, RAL 7032 |
| Flammability class UL 94 | V-0 |
| Clamping range of hood-version | |
| Suitable for dragline cable (fixed cable connection) | Yes |

Max. total current with 4-channel distributor is 8A. And with 8-channel distributor is 12A

## Dimensioned drawing

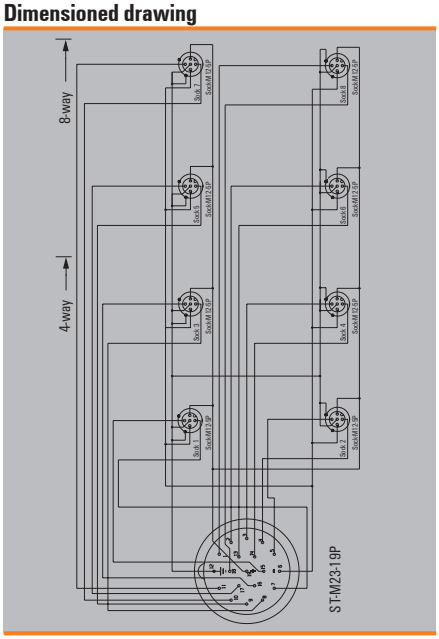


## Dimensioned drawing

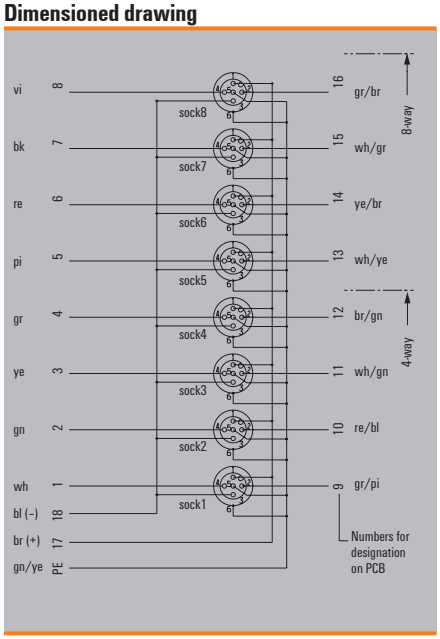

## Bayonet joint

## SAI-8-SHB

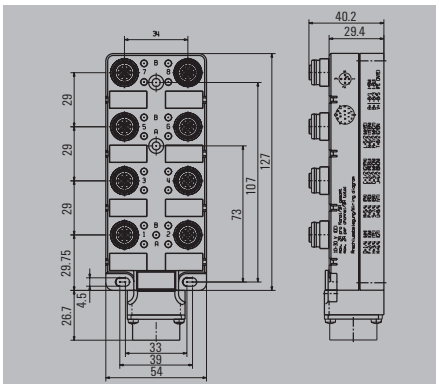


## Ordering data

| Complete modules | |
|---|---|
| | 8 channel |
| **Note** | |

| SAI-8-SHB | | 5-pole |
|---|---|---|
| **Type** | **QTY** | **Order No.** |
| SAI-8-SHB 5P FC | 1 | **1872440000** |
| Other versions on request | | |

## Technical data

| | |
|---|---|
| Operating voltage | 10...30 V |
| Current of continuous busbars | 2 A |
| max. current-carrying capacity per slot | 4 A |
| Total current | 9 A |
| Pollution severity | 3 |
| Protection degree | IP 67 |
| Ambient temperature range | -25...+80 °C |
| Housing main material | PA 6 GF |
| Contact carrier material | PBT (UL 94 V0) |
| Base material of contacts | CuZn, pre-nickeled, gold-plated |
| screw socket | CuZn, nickel-plated |
| Housing colour | grey, RAL 7032 |
| Flammability class UL 94 | V-0 |
| Clamping range of hood-version | |
| Suitable for dragline cable (fixed cable connection) | |

## Dimensioned drawing

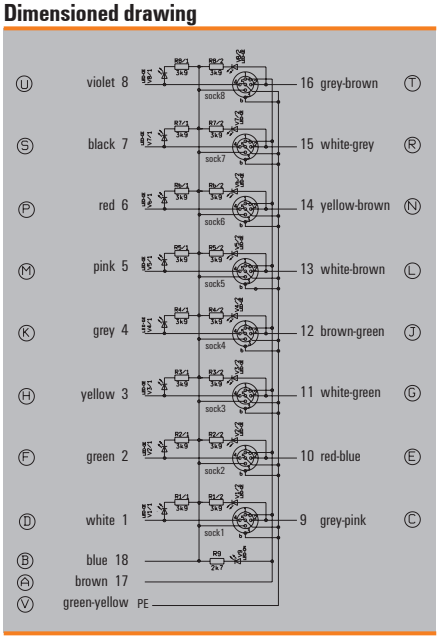

## Bayonet joint with socket connector on reverse

### SAI-8-SHB

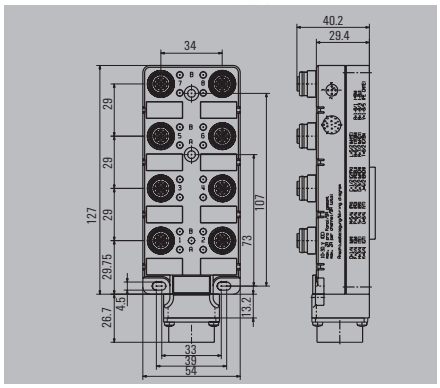


## Ordering data

| Complete modules | |
|---|---|
| | 8 channel |
| **Note** | |

### SAI-8-SHB — 5-pole

| Type | QTY | Order No. |
|---|---|---|
| SAI-8-SHB 5P F13 FC | 1 | 1872460000 |
| Other versions on request | | |

## Technical data

| | |
|---|---|
| Operating voltage | 10...30 V |
| Current of continuous busbars | 2 A |
| max. current-carrying capacity per slot | 4 A |
| Total current | 9 A |
| Pollution severity | 3 |
| Protection degree | IP 67 |
| Ambient temperature range | -25...+80 °C |
| Housing main material | PA 6 GF |
| Contact carrier material | PBT (UL 94 V0) |
| Base material of contacts | CuZn, pre-nickeled, gold-plated |
| screw socket | CuZn, nickel-plated |
| Housing colour | grey, RAL 7032 |
| Flammability class UL 94 | V-0 |
| Clamping range of hood-version | |
| Suitable for dragline cable (fixed cable connection) | |

## Dimensioned drawing

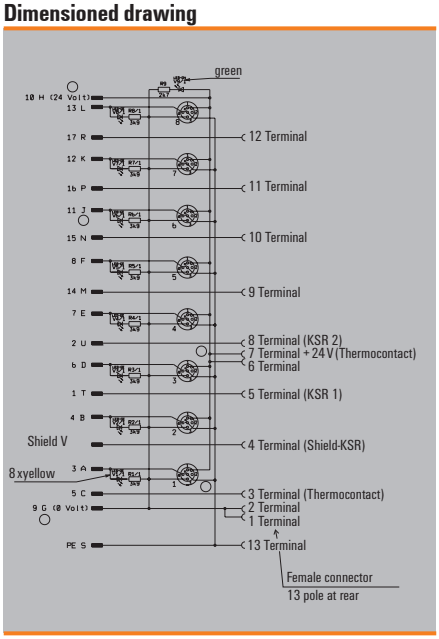

# IDC – the quick connection

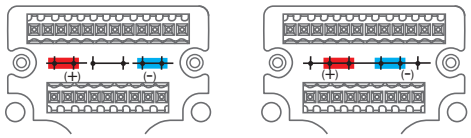


Factory setting
(see wiring diagram)
Current bridged

Current isolated

### Hood version

- Compact IDC connection cuts production, commissioning and maintenance work
- Robust, knurled metal nut, safe handling requiring little force
- The dimensions of the IDC distributor correspond to and are compatible with the standard SAI distributor.
- Plug-in connection module for bus cables enhances on-site flexibility
- Three sizes for 4, 6 and 8 channels
- 3-pole version with one I/O signal per channel, 4-pole version with two I/O signals per channel
- Individual on site assembly of sensor/actuator lines
- Fast, reliable connection with IDC connection element
- IP 67 Ingress protection classification.

### SAI fixed cable version

- Pre-assembled bus cables minimise installation work and avoid wiring errors
- 3 sizes for 4, 6 and 8 channels
- Highly flexible, cable carrier compatible bus cables with polyurethane (PUR/PVC) sheathing
  - 3 x 0.75 $mm^2$
  - n x 0.34 $mm^2$,
- 3-pole version with one I/O signal per channel, 4-pole version with two I/O signals per channel

### IDC connection element

### Ordering data

| Type | Qty. | Order No. |
|---|---|---|
| SAI-SA-3-IDC | 1 | 9457720000 |
| SAI-SA-4-IDC | 1 | 1766810000 |

**The significant advantages of Weidmüller tools:**

- Easy handling
- Very small, ideal for confined assembly conditions
- Patented solution
- Metal Connectors

Insulation displacement connections on Weidmüller SAI distributors are currently the smallest but also the most robust connection elements on the market. Thanks to their extremely small dimensions, corresponding distributors are available with the same dimensions in M12 or IDC versions.
For large series, e.g. where more than 100 modules are used every year, we recommend using a special tool to simplify the handling of the connected lines even further. However, this tool is not always necessary because all connection elements can usually be readily tightened by hand.

### IDC-Tool

### Ordering data

| Type | Qty. | Order No. |
|---|---|---|
| SAI-IDC-Tool | 1 | 1795020000 |

### Screwty®

The IDC elements can also be tightened with the Weidmüller Screwty®.

### Ordering data

| Type | Qty. | Order No. |
|---|---|---|
| Screwty®-M12-DM | 1 | 1900001000 |

### Protective cap M12 for IDCw

### Ordering data

| Type | Qty. | Order No. |
|---|---|---|
| SAI-SK-M12 IDC | 10 | 1794850000 |

# M12 IDC

## Hood version

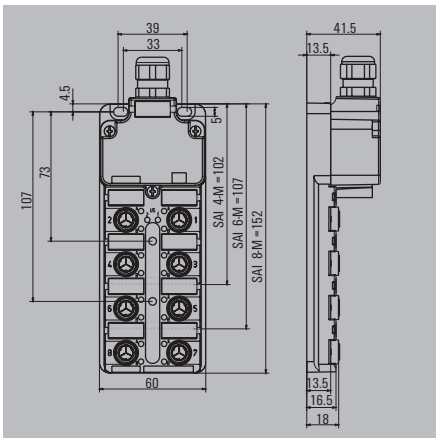


## Ordering data

| Complete modules | | SAI-4/6/8-M IDC | | 3-pole | SAI-4/6/8-M IDC | | 4-pole |
|---|---|---|---|---|---|---|---|
| | | Type | QTY | Order No. | Type | QTY | Order No. |
| | 4 channel | SAI-4-M 3P IDC | 1 | 1760040000 | SAI-4-M 4P IDC | 1 | 1766780000 |
| | 6 channel | SAI-6-M 3P IDC | 1 | 1760050000 | SAI-6-M 4P IDC | 1 | 1766790000 |
| | 8 channel | SAI-8-M 3P IDC | 1 | 1760060000 | SAI-8-M 4P IDC | 1 | 1766800000 |
| **Base unit** | | | | | | | |
| | 4 channel | SAI-4-M 3P IDC UT | 2 | 1760041000 | SAI-4-M 4P IDC UT | 2 | 1766781000 |
| | 6 channel | SAI-6-M 3P IDC UT | 2 | 1760051000 | SAI-6-M 4P IDC UT | 2 | 1766791000 |
| | 8 channel | SAI-8-M 3P IDC UT | 2 | 1760061000 | SAI-8-M 4P IDC UT | 2 | 1766801000 |
| **Mounting hood** | | | | | | | |
| | Tension-clamp connection | SAI-4/6/8-MH BLZF3.5 | 1 | 1752080000 | SAI-4/6/8-MH BLZF3.5 | 1 | 1752080000 |
| | Tension clamp connection | SAI-4/6/8-MH BLZF3.5 SV | 50 | 1752080050 | SAI-4/6/8-MH BLZF3.5 SV | 50 | 1752080050 |
| | Screw connection | SAI-4/6/8-MH BL3.5 | 1 | 1724750000 | SAI-4/6/8-MH BL3.5 | 1 | 1724750000 |
| | Screw connection | SAI-4/6/8-MH BL3.5 SV | 50 | 1724750050 | SAI-4/6/8-MH BL3.5 SV | 50 | 1724750050 |
| **Note** | | Other versions on request | | | Other versions on request | | |

## Technical data

| | |
|---|---|
| Operating voltage | 10...30 V |
| Current of continuous busbars | 2 A |
| max. current-carrying capacity per slot | 3 A |
| Total current | 10 A |
| Pollution severity | 2 |
| Protection degree | IP 67 |
| Ambient temperature range | -20...+90 °C |
| Housing main material | Pocan |
| Contact carrier material | PBT (UL 94 V0) |
| Base material of contacts | |
| screw socket | CuZn, nickel-plated |
| Housing colour | grey, RAL 7032 |
| Flammability class UL 94 | V-0 |
| Clamping range of hood-version | 0.08...1.5 mm² |
| Suitable for dragline cable (fixed cable connection) | |

With dual power supply: 2x8 = 16 A total current
Clamping range up to 2.5 mm² with screw connection

## Wiring diagram

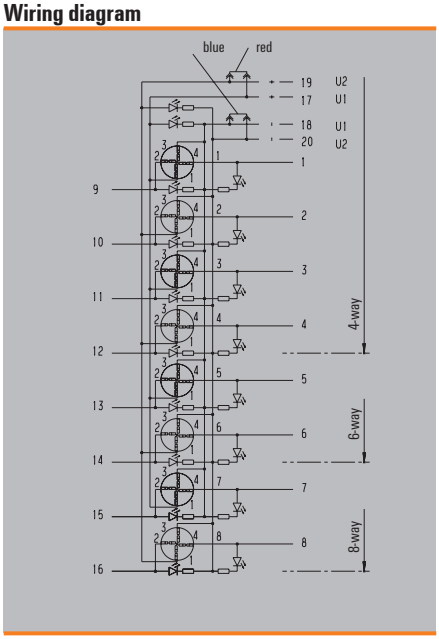


## Wiring diagram

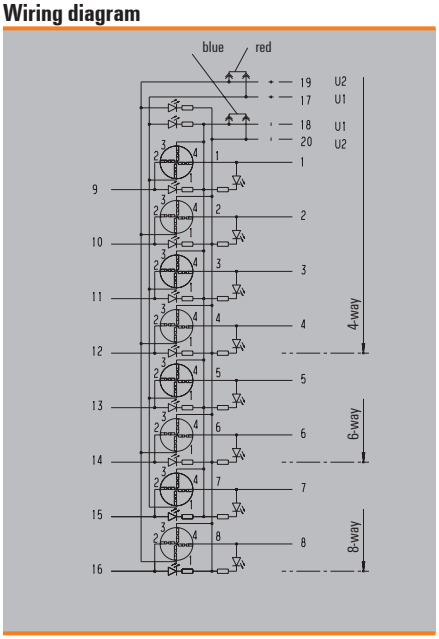

## Fixed cable version

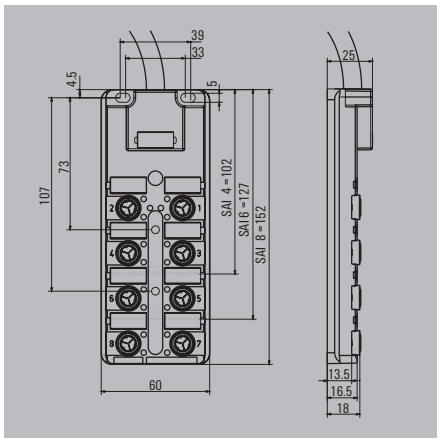


## Ordering data

| 4 channel | | |
|---|---|---|
| Cable length 5 m | | |
| Cable length 10 m | | |
| **6 channel** | | |
| Cable length 5 m | | |
| Cable length 10 m | | |
| **8 channel** | | |
| Cable length 5 m | | |
| Cable length 10 m | | |
| **Note** | | |

### SAI-4/6/8-F IDC — 3-pole

| Type | QTY | Order No. |
|---|---|---|
| SAI-4-F 3P IDC PUR 5M | 1 | 1766720000 |
| SAI-4-F 3P IDC PUR 10M | 1 | 1766730000 |
| | | |
| SAI-6-F 3P IDC PUR 5M | 4 | 1766740000 |
| SAI-6-F 3P IDC PUR 10M | 1 | 1766750000 |
| | | |
| SAI-8-F 3P IDC PUR 5M | 1 | 1766760000 |
| SAI-8-F 3P IDC PUR 10M | 1 | 1766770000 |
| Other versions on request | | |

### SAI-4/6/8-F IDC — 4-pole

| Type | QTY | Order No. |
|---|---|---|
| SAI-4-F 4P IDC PUR 5M | 1 | 1766660000 |
| SAI-4-F 4P IDC PUR 10M | 1 | 1766670000 |
| | | |
| SAI-6-F 4P IDC PUR 5M | 1 | 1766680000 |
| SAI-6-F 4P IDC PUR 10M | 1 | 1766690000 |
| | | |
| SAI-8-F 4P IDC PUR 5M | 1 | 1766700000 |
| SAI-8-F 4P IDC PUR 10M | 1 | 1766710000 |
| Other versions on request | | |

## Technical data

| | |
|---|---|
| Operating voltage | 10...30 V |
| Current of continuous busbars | 2 A |
| max. current-carrying capacity per slot | 3 A |
| Total current | 9 A |
| Pollution severity | 2 |
| Protection degree | IP 67 |
| Ambient temperature range | -20...+80 °C |
| Housing main material | Pocan |
| Contact carrier material | PBT (UL 94 V0) |
| Base material of contacts | |
| screw socket | CuZn, nickel-plated |
| Housing colour | grey, RAL 7032 |
| Flammability class UL 94 | V-0 |
| Clamping range of hood-version | |
| Suitable for dragline cable (fixed cable connection) | Yes |

## Wiring diagram

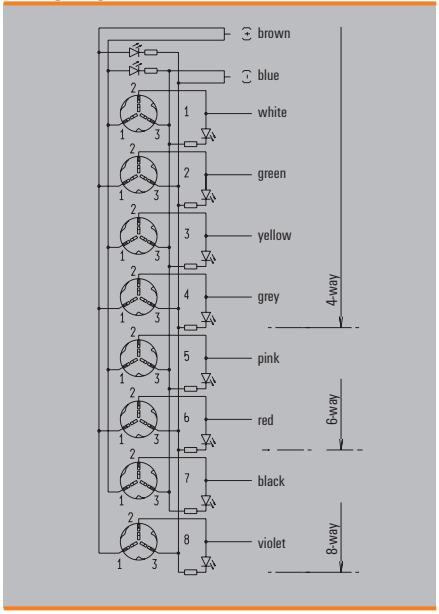


## Wiring diagram

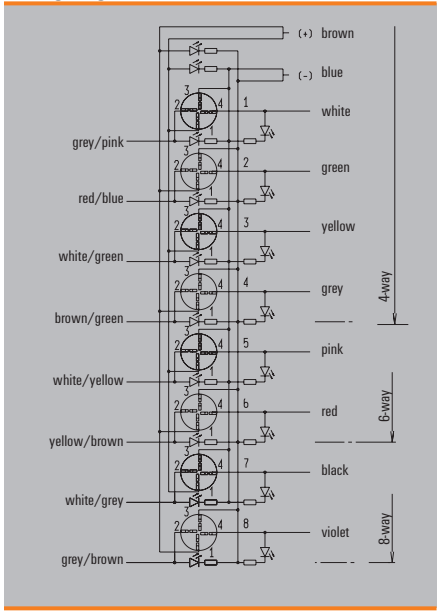

**Fixed cable version, specifically designed for use in food processing equipment**

## SAI-8-F 5P M12 5M VA

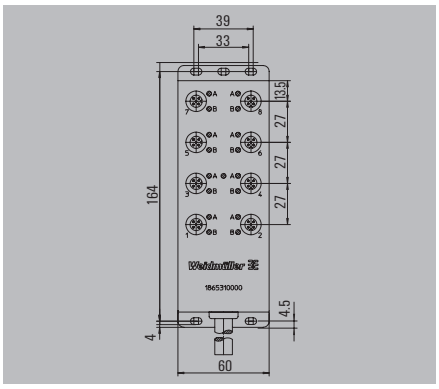


## Ordering data

| 8 channel | |
|---|---|
| | Cable length 5 m |
| **Note** | |

| SAI-8-F 5P M12 5M VA | | 5-pole |
|---|---|---|
| **Type** | **QTY** | **Order No.** |
| SAI-8-F 5P M12 5M VA | 1 | **1865310000** |

## Technical data

| | |
|---|---|
| Operating voltage | 10...30 V |
| Current of continuous busbars | 2 A |
| max. current-carrying capacity per slot | 4 A |
| Total current | 12 A |
| Pollution severity | 3 |
| Protection degree | IP 69K |
| Ambient temperature range | -25...+70 °C |
| Housing main material | Stainless steel |
| Contact carrier material | |
| Base material of contacts | CuZn, pre-nickeled, gold-plated |
| screw socket | stainless steel |
| Housing colour | Silver |
| Fire behaviour | V-0 |
| Clamping range of hood-version | |
| Suitable for dragline cable (fixed cable connection) | Yes |

Accessories include 4 protective covers for unused slots

## Dimensioned drawing

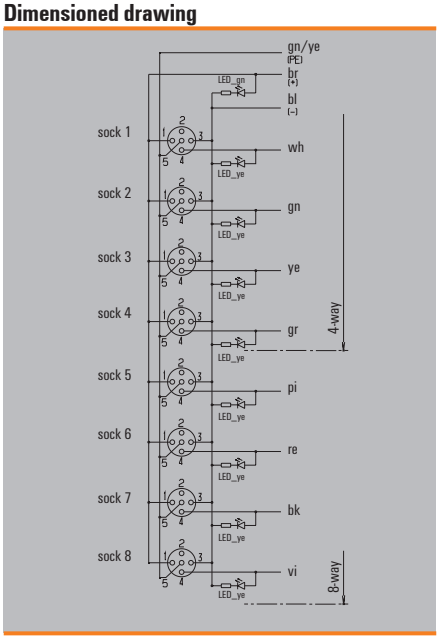

## Tension-clamp connection M12, stainless steel

## SAIS / SAIB VA

**straight**

### Ordering data

| Male | | Type | QTY | Order No. |
|---|---|---|---|---|
| | 5-pole. PG 9 | SAIS 5/9-VA | 1 | 1920700000 |
| | 5-pole. PG 9 | SAIS 5/9-VA-B-COD | 1 | 1920720000 |
| **Socket** | | | | |
| | 5-pole. PG 9 | SAIB 5/9-VA | 1 | 1920710000 |
| | 5-pole. PG 9 | SAIB 5/9-VA-B-COD | 1 | 1920730000 |
| **Note** | | | | |

### Technical data

| | |
|---|---|
| Type of connection | Tension clamp connection |
| Housing main material | 1.4404/316L |
| Contact tube diameter | M12 |
| Cable diameter | 6...8 mm (PG9) |
| Wire cross-section, min. / max. | 0.25...0.5 mm² |
| Rated current | 4 A |
| Rated voltage | 125 V |
| Temperature range of housing | -25...+85 °C |
| Protection degree | IP 69K |
| Contact surface | Gold-plated |
| **Note** | PB = PROFIBUS (B-COD)Torque, see E.12 |

### Dimensioned drawing

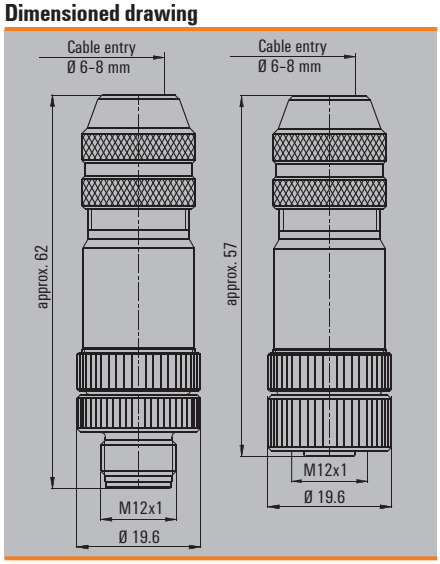


PB = PROFIBUS (B-COD)Torque, see E.12

# Sensor-actuator distributors for special applications

**All-metal**
**SAI-4/8-FMM M12**

**Shielded cable, e.g. for analogue initiators**
Some applications need full shielding from sensor to control. This is possible with the all metal SAI distributors. The distributors are supplied with an EMC cable gland. Initiator LEDs are omitted.

**Especially thick trunk cable**
It is sometimes advisable to use the machine manufacturer's standard trunk cable. This cable will usually have a relatively large outside diameter and will therefore require plenty of space (SAI-4/6/8 MHD).

**All-metal fixed cable distributors**
Weidmüller metal distributors have proved their worth in many situations. They are available as 4 and 8 channel M12 versions with cable lengths of 5 or 10 m. Metal distributors are also necessary when ESD requirements must be complied with.
The conductive metal surface provides low surface resistance.

**Advantages:**
- No ESD/EMC problems
- High resistance to chemicals or mechanical loads
- Standard mounting dimensions

**SAI-M with metal hood**
**SAI-4/6/8 MMS SAI-4/6/8 MM**
MMS: **M**odular, **M**etal, **S**hield
MM: **M**odular, **M**etal

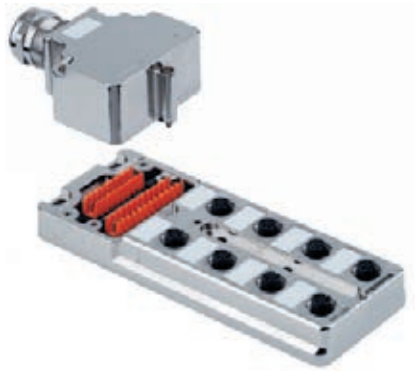

**SAI-4/6/8 MMS with EMC cable gland in metal housing**

For especially tough conditions where plastic is totally unsuitable. In certain cases it makes sense to avoid the use of plastics altogether. In such cases a distributor made completely from metal is required that can be connected to others using metal cable glands, without additional connections for the shielding.

**SAI-4/6/8 MH**
MH: **M**odular, **H**igh

**Cable gland: M20**

For cables with outside insulation diameter from 10 mm to 14 mm. Listed below are just some of the cable sizes that are suitable for the SAI distributor with M20 cable gland:
- 14 x 0.50 mm² to 16 x 0.50 mm²
- 8 x 0.75 mm² to 15 x 0.75 mm²
- 8 x 1.00 mm² to 10 x 1.00 mm²
- 5 x 1.50 mm² to 7 x 1.50 mm²

**SAI-4/6/8 MHD**
MHD: Modular, High, sealeD
(for especially thick cables)

**Cable gland: M25**

For cables with outside insulation diameter from 13 mm to 18 mm. Listed below are just some of the cable sizes that are suitable for the SAI distributor with M25 cable gland:
- 21 x 0.50 mm²
- 18 x 0.75 mm² to 21 x 0.75 mm²
- 14 x 1.00 mm² to 20 x 1.00 mm²
- 8 x 1.50 mm² to 16 x 1.50 mm²

## Overview of metal distributors

| Type | SAI-UT | Sockets | M12 | Poles–Hood | Form | Cable gland | Cable gland | Length | Order No. |
|---|---|---|---|---|---|---|---|---|---|
| SAI-4-MH-4P M12 | PBT | 4 | 4 | Zn-G | high | M20 | plastic | | **1705922000** |
| SAI-6-MH-4P M12 | PBT | 6 | 4 | Zn-G | high | M20 | plastic | | **1705932000** |
| SAI-8-MH-4P M12 | PBT | 8 | 4 | Zn-G | high | M20 | plastic | | **1705942000** |
| SAI-4-MH-5P M12 | PBT | 4 | 5 | Zn-G | high | M20 | plastic | | **1701232000** |
| SAI-6-MH-5P M12 | PBT | 6 | 5 | Zn-G | high | M20 | plastic | | **1701242000** |
| SAI-8-MH-5P M12 | PBT | 8 | 5 | Zn-G | high | M20 | plastic | | **1701252000** |
| SAI-4-MHD-5P M12 | PBT | 4 | 5 | Zn-G | high | M25 | plastic | | **1701233000** |
| SAI-6-MHD-5P M12 | PBT | 6 | 5 | Zn-G | high | M25 | plastic | | **1701243000** |
| SAI-8-MHD-5P M12 | PBT | 8 | 5 | Zn-G | high | M25 | plastic | | **1701253000** |
| SAI-4-MHD-4P M12 | PBT | 4 | 4 | Zn-G | high | M25 | plastic | | **1705923000** |
| SAI-6-MHD-4P M12 | PBT | 6 | 4 | Zn-G | high | M25 | plastic | | **1705933000** |
| SAI-8-MHD-4P M12 | PBT | 8 | 4 | Zn-G | high | M25 | plastic | | **1705943000** |
| | | | | | | | | | |
| SAI-4-MMS-4P M12 | Zn-G | 4 | 4 | Zn-G | low | M20 | EMC | | **1783540000** |
| SAI-8-MMS-4P M12 | Zn-G | 8 | 4 | Zn-G | low | M20 | EMC | | **1783530000** |
| SAI-4-MMS-5P M12 | Zn-G | 4 | 5 | Zn-G | low | M20 | EMC | | **1783520000** |
| SAI-8-MMS-5P M12 | Zn-G | 8 | 5 | Zn-G | low | M20 | EMC | | **1783510000** |
| | | | | | | | | | |
| SAI-4-MM-5P M12 | Zn-G | 4 | 5 | Zn-G | low | M20 | brass | | **1783500000** |
| SAI-8-MM-5P M12 | Zn-G | 8 | 5 | Zn-G | low | M20 | brass | | **1783490000** |
| | | | | | | | | | |
| SAI-4/6/8 MH-MH BL 3.5 | | | | Zn-G | high | M20 | plastic | | **1724752000** |
| SAI-4/6/8 MH-MHD BL 3.5 | | | | Zn-G | high | M25 | plastic | | **1724753000** |
| SAI-8-MH-5P M12 ZF III | PBT | 8 | 5 | Zn-G | high | M20 | plastic | | **1782760000** |
| SAI-8-MMS-5P M12 ZF III | Zn-G | 8 | 5 | Zn-G | high | M20 | plastic | | **1782740000** |
| SAI-4/6/8 MH-MH BL-ZF 3.5 | | | | Zn-G | high | M20 | plastic | | **1782750000** |
| | | | | | | | | | |
| SAI-4-FMM-4P M12 5M | Zn-G | 4 | 4 | | | | | 5 m | **9456190002** |
| SAI-4-FMM-4P M12 10M | Zn-G | 4 | 4 | | | | | 10 m | **9456200002** |
| SAI-8-FMM-4P M12 5M | Zn-G | 8 | 4 | | | | | 5 m | **9456750002** |
| SAI-8-FMM-4P M12 10M | Zn-G | 8 | 4 | | | | | 10 m | **9456760002** |

**Note:** The cable outside diameter can vary from manufacturer to manufacturer. It is therefore possible that the cable glands hold other cables firmly despite a different strand lay-up.
In each case, it is best to first measure the cable diameter and then choose an appropriate distributor.

## Fixed cable version

## SAI-4-FMM

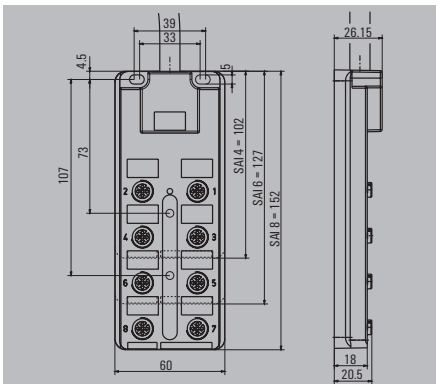


## Ordering data

| SAI-4-FMM | | 4-pole |
|---|---|---|
| **Type** | **QTY** | **Order No.** |
| **4 channel** | | |
| SAI-4-FMM-4P M12 5M | 4 | 9456190002 |
| SAI-4-FMM-4P M12 10M | 3 | 9456200002 |
| **8 channel** | | |
| SAI-8-FMM-4P M12 5M | 1 | 9456750002 |
| SAI-8-FMM-4P M12 10M | 3 | 9456760002 |
| **Note** | | |
| Additional variants on request<br>Bus cable is not shielded | | |

## Technical data

| | |
|---|---|
| Operating voltage | 10...30 V |
| Current of continuous busbars | 2 A |
| max. current-carrying capacity per slot | 3 A |
| Total current | 9 A |
| Pollution severity | 3 |
| Protection degree | IP 68 |
| Ambient temperature range | -20...+90 °C |
| Housing main material | CuZn, nickel-plated |
| Contact carrier material | PBT (UL 94 V0) |
| Base material of contacts | CuZn, pre-nickeled, gold-plated |
| screw socket | CuZn, nickel-plated |
| Housing colour | Silver |
| Flammability class UL 94 | V-0 |
| Clamping range of hood-version | |
| Suitable for dragline cable (fixed cable connection) | Yes |

## Dimensioned drawing

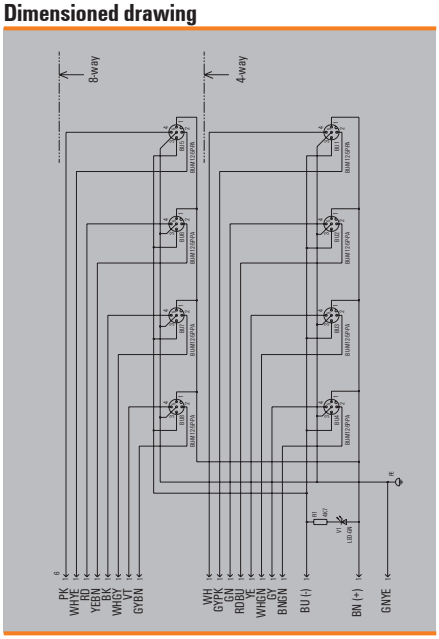

## Hood version

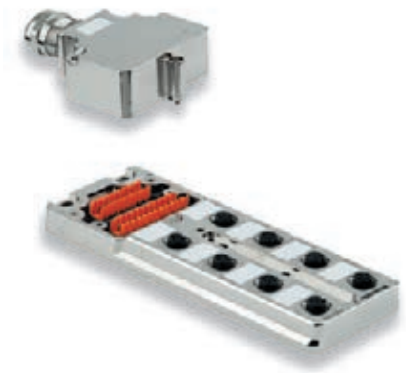

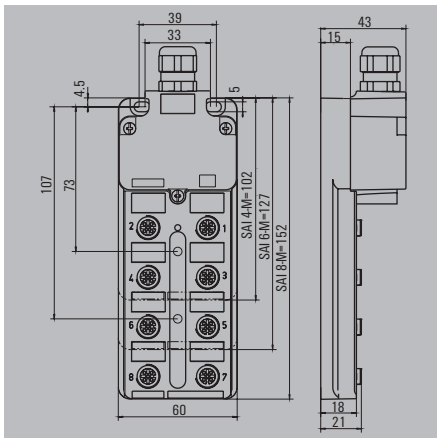


## Ordering data

| Complete modules,4-pole | | SAI-4/6/8-MMS | | M12 | SAI-4/6/8-MM | | M12 |
|---|---|---|---|---|---|---|---|
| | | Type | QTY | Order No. | Type | QTY | Order No. |
| | 4 channel | SAI-4-MMS 4P M12 | 1 | 1783540000 | | | |
| | 8 channel | SAI-8-MMS 4P M12 | 1 | 1783530000 | | | |
| **Complete modules,5-pole** | | | | | | | |
| | 4 channel | SAI-4-MMS 5P M12 | 1 | 1783520000 | SAI-4-MM 5P M12 | 1 | 1783500000 |
| | 8 channel | SAI-8-MMS 5P M12 | 1 | 1783510000 | SAI-8-MM 5P M12 | 1 | 1783490000 |
| Tension-clamp connection,high cover | 8 channel | | | | SAI-8-MMH 5P M12 ZF | 1 | 1782740000 |
| **Base unit** | | | | | | | |
| | 8 channel | | | | SAI-8-MM 5P M12 UT | 2 | 1783491000 |
| **Mounting hood** | | | | | | | |
| | Screw connection | SAI-4/6/8 MH-MM BL 3.5 | 1 | 1724754000 | SAI-4/6/8 MH-MM BL 3.5 | 1 | 1724754000 |
| **Note** | | With EMC cable gland | | | MM without initiator LED and with standard metal cable gland | | |

## Technical data

| | |
|---|---|
| Operating voltage | 10...30 V |
| Current of continuous busbars | 2 A |
| max. current-carrying capacity per slot | 3 A |
| Total current | 10 A |
| Pollution severity | 3 |
| Protection degree | IP 68 |
| Ambient temperature range | -20...+90 °C |
| Housing main material | CuZn, nickel-plated |
| Contact carrier material | PBT (UL 94 V0) |
| Base material of contacts | CuZn, pre-nickeled, gold-plated |
| screw socket | CuZn, nickel-plated |
| Housing colour | Silver |
| Flammability class UL 94 | V-0 |
| Clamping range of hood-version | 0.08...1.5 mm² |
| Suitable for dragline cable (fixed cable connection) | |
| Complete shielding transmission via the housing | |

## Wiring diagram

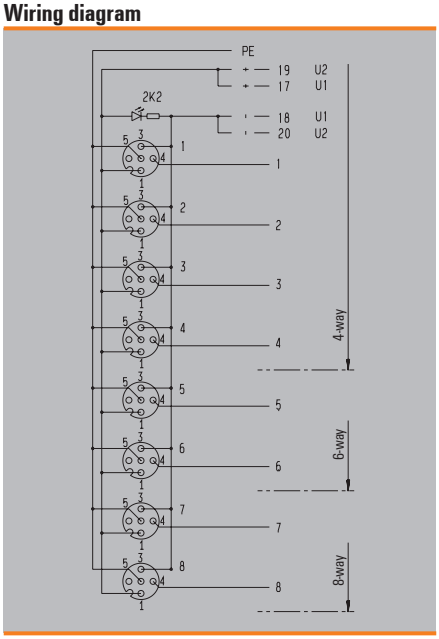


## Wiring diagram

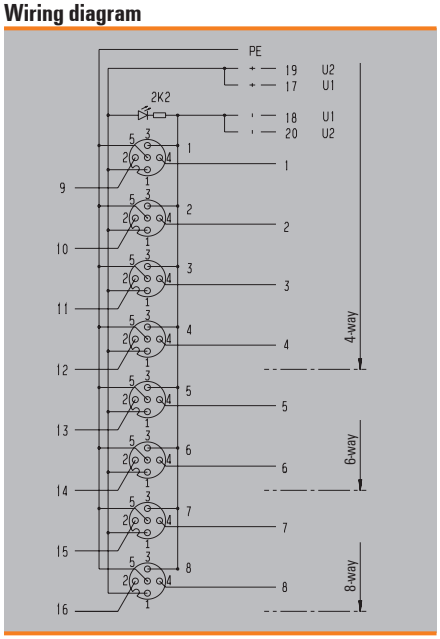

## Hood version with M20 outlet

For cables with 10-14 mm outer diameter

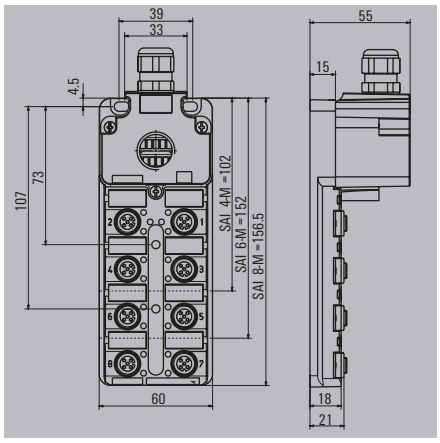


## Ordering data

| Complete modules | | SAI-4/6/8-MH 4-pole | | SAI-4/6/8-MH 5-pole | |
|---|---|---|---|---|---|
| | | Type | QTY | Type | QTY |
| | 4 channel | SAI-4-MH-4P M12 | 1 | SAI-4-MH-5P M12 | 1 |
| | 6 channel | SAI-6-MH-4P M12 | 1 | SAI-6-MH-5P M12 | 1 |
| | 8 channel | SAI-8-MH-4P M12 | 1 | SAI-8-MH-5P M12 | 1 |
| Tension-clamp connection | 8 channel | | | SAI-8-MH-5P M12 ZF III | 1 |
| **Mounting hood** | | | | | |
| | Tension-clamp connection | SAI-4/6/8 MH MH BLZF3,5 | 1 | SAI-4/6/8 MH MH BLZF3,5 | 1 |
| | Screw connection | SAI-4/6/8 MH-MH BL 3.5 | 1 | SAI-4/6/8 MH-MH BL 3.5 | 1 |
| **Note** | | Other versions on request | | Other versions on request | |

| Type | Order No. (4-pole) | Order No. (5-pole) |
|---|---|---|
| SAI-4-MH-4P M12 | 1705922000 | 1701232000 |
| SAI-6-MH-4P M12 | 1705932000 | 1701242000 |
| SAI-8-MH-4P M12 | 1705942000 | 1701252000 |
| SAI-8-MH-5P M12 ZF III | | 1782760000 |
| SAI-4/6/8 MH MH BLZF3,5 | 1782750000 | 1782750000 |
| SAI-4/6/8 MH-MH BL 3.5 | 1724752000 | 1724752000 |

## Technical data

| | |
|---|---|
| Operating voltage | 10...30 V |
| Current of continuous busbars | 2 A |
| max. current-carrying capacity per slot | 3 A |
| Total current | 10 A |
| Pollution severity | 3 |
| Protection degree | IP 68 |
| Ambient temperature range | -20...+90 °C |
| Housing main material | CuZn, nickel-plated |
| Contact carrier material | PBT (UL 94 V0) |
| Base material of contacts | CuZn, pre-nickeled, gold-plated |
| screw socket | CuZn, nickel-plated |
| Housing colour | Silver |
| Flammability class UL 94 | V-0 |
| Clamping range of hood-version | 0.08...1.5 mm² |
| Suitable for dragline cable (fixed cable connection) | |

With dual power supply: 2x8 = 16 A total current
Clamping range up to 2.5 mm² with screw connection

## Wiring diagram

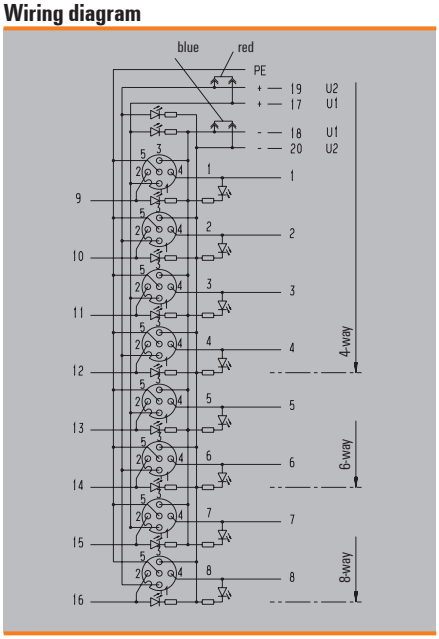


## Wiring diagram

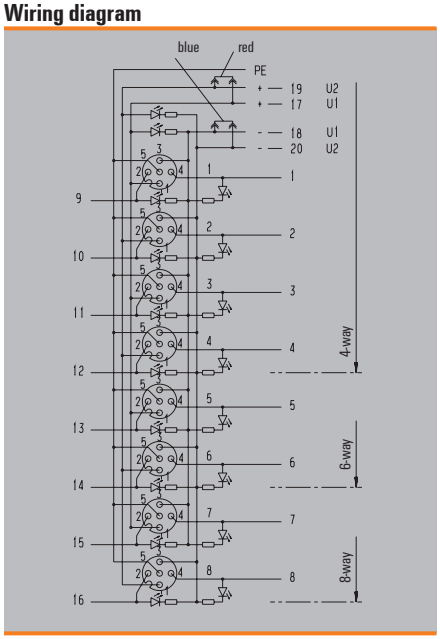

## Hood version with M25 outlet

For cables with 13-18 mm outer diameter

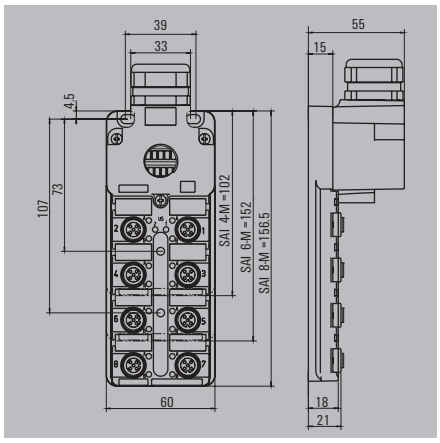


## Ordering data

| Complete modules | | |
|---|---|---|
| 4 channel | | |
| 6 channel | | |
| 8 channel | | |
| **Mounting hood** | | |
| Screw connection | | |
| **Note** | | |

### SAI-4/6/8-MHD — 4-pole

| Type | QTY | Order No. |
|---|---|---|
| SAI-4-MHD-4P M12 | 1 | 1705923000 |
| SAI-6-MHD-4P M12 | 1 | 1705933000 |
| SAI-8-MHD-4P M12 | 1 | 1705943000 |
| | | |
| SAI-4/6/8 MH-MHD BL 3.5 | 1 | 1724753000 |

Other versions on request

### SAI-4/6/8-MHD — 5-pole

| Type | QTY | Order No. |
|---|---|---|
| SAI-4-MHD-5P M12 | 1 | 1701233000 |
| SAI-6-MHD-5P M12 | 1 | 1701243000 |
| SAI-8-MHD-5P M12 | 1 | 1701253000 |
| | | |
| SAI-4/6/8 MH-MHD BL 3.5 | 1 | 1724753000 |

Other versions on request

## Technical data

| | |
|---|---|
| Operating voltage | 10...30 V |
| Current of continuous busbars | 2 A |
| max. current-carrying capacity per slot | 3 A |
| Total current | 10 A |
| Pollution severity | 3 |
| Protection degree | IP 68 |
| Ambient temperature range | -20...+90 °C |
| Housing main material | CuZn, nickel-plated |
| Contact carrier material | PBT (UL 94 V0) |
| Base material of contacts | CuZn, pre-nickeled, gold-plated |
| screw socket | CuZn, nickel-plated |
| Housing colour | Silver |
| Flammability class UL 94 | V-0 |
| Clamping range of hood-version | 0.08...1.5 mm² |
| Suitable for dragline cable (fixed cable connection) | |

With dual power supply: 2x8 = 16 A total current
Clamping range up to 2.5 mm² with screw connection

## Wiring diagram

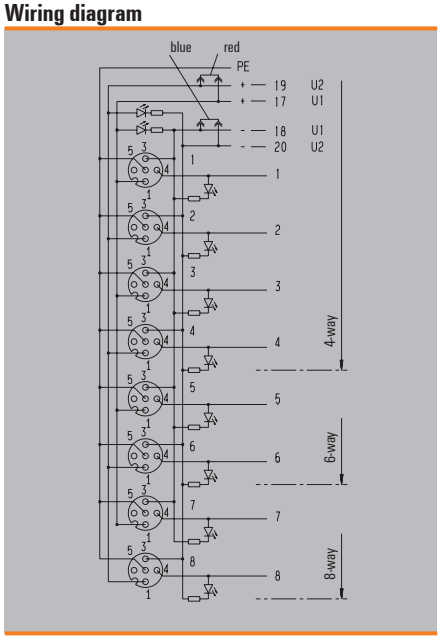


## Wiring diagram

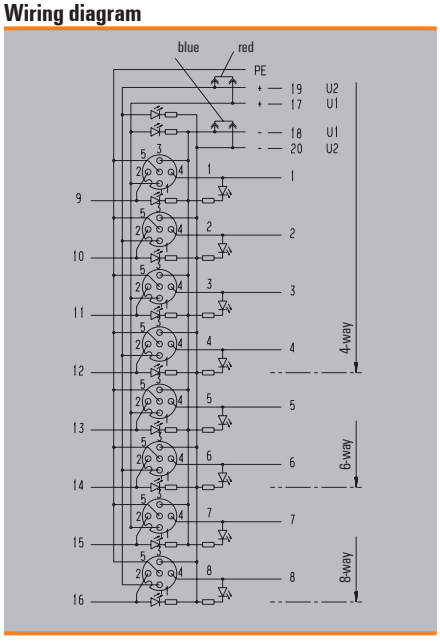

# For switching with five no-voltage contacts in an M12 without LED

## with hood

### Emergency stop wiring

Sometimes a machine builder will need more than two floating contacts in one M12 plug-in connector. This is the case, for example, in the wiring for some "emergency stop" circuits. It was for this application that Weidmüller developed the 1:1 SAI distributor.

This SAI distributor has four M12 plug-in connectors with five floating contacts in one socket connector. The distributor is supplied complete with hood.

When connecting PT100 3- and 4-conductor initiators, we recommend the new shielded metal version. If you need other circuit configurations, simply contact us.

**Note:** This distributor should not be used as the base module for active bus distributors.

## base element

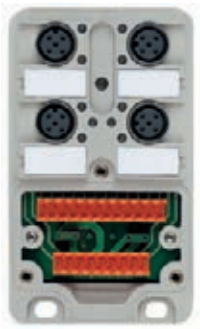

### Wiring diagram

| Socket | Contact | BL 3.5 contact |
|---|---|---|
| 1 | 1 | 1 |
| 1 | 2 | 2 |
| 1 | 3 | 3 |
| 1 | 4 | 4 |
| 1 | 5 | 5 |
| 2 | 1 | 6 |
| 2 | 2 | 7 |
| 2 | 3 | 8 |
| 2 | 4 | 9 |
| 2 | 5 | 10 |
| 3 | 1 | 11 |
| 3 | 2 | 12 |
| 3 | 3 | 13 |
| 3 | 4 | 14 |
| 3 | 5 | 15 |
| 4 | 1 | 16 |
| 4 | 2 | 17 |
| 4 | 3 | 18 |
| 4 | 4 | 19 |
| 4 | 5 | 20 |
| – | – | 21 |

## metal

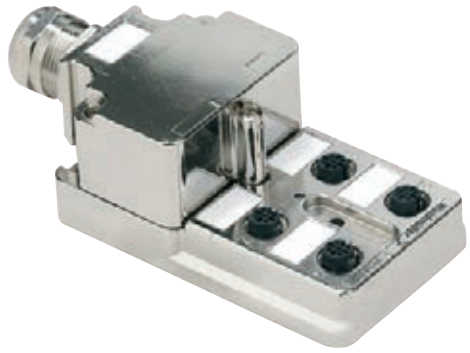

### Technical data

| | |
|---|---|
| Current per channel | 2 A |
| Total current | 8 A |
| LEDs | No LEDs are integrated at any point. |

### Ordering data

| Type | Qty. | Order No. |
|---|---|---|
| SAI-4-M 5P M12 1:1 (plastic hood) | 1 | 1806010000 |
| Base element (plastic) | 1 | 1806011000 |
| SAI-4-MMS 5P M12 1:1 (metal hood) | 1 | 1897680000 |

## SAI distributor with 8 poles per M12

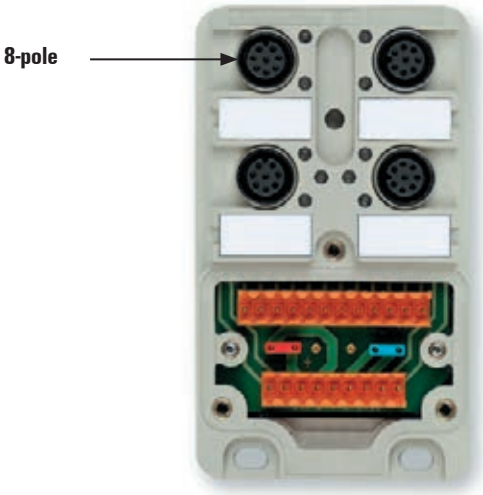


### Applications

This distributor can be used both as a base module for satellite solutions (SAI-Combi) and for connecting sensors/units with more than two contacts.

### SAI-Combi

A sub-distribution board can be connected to every M12 with the help of the SAI-4-M 8P in conjunction with the SAI Active bus hood. This SAI should then be a 4-channel distributor with one channel per socket. The SAI-4-M 4P M12 is particularly suitable.
Part No. **1705920000.**

### Sensors, units with more than two signals in one line

As one socket in this module contains four signal paths and, in addition, two +, two – and one PE, components with more than two signal lines can be connected to this module. Eight-pole connecting cables are available on request.

### Wiring

| M12 socket | M12 contact | BL 3.5 connection | PLC input | Supply |
|---|---|---|---|---|
| 1 | 1 | 1 | E0.0 | |
| 1 | 2 | 3 | E0.1 | |
| 1 | 3 | 5 | E0.2 | |
| 1 | 4 | 7 | E0.3 | |
| 2 | 1 | 2 | E0.4 | |
| 2 | 2 | 4 | E0.5 | |
| 2 | 3 | 6 | E0.6 | |
| 2 | 4 | 8 | E0.7 | |
| 3 | 1 | 9 | E1.0 | |
| 3 | 2 | 11 | E1.1 | |
| 3 | 3 | 13 | E1.2 | |
| 3 | 4 | 15 | E1.3 | |
| 4 | 1 | 10 | E1.4 | |
| 4 | 2 | 12 | E1.5 | |
| 4 | 3 | 14 | E1.6 | |
| 4 | 4 | 16 | E1.7 | |
| 1/3 | 5 | 17 | | 24 V |
| 2/4 | 5 | 19 | | 24 V |
| 1/3 | 6/7 | 18 | | 0 V |
| 2/4 | 6/7 | 20 | | 0 V |
| 1/2/3/4 | 8 | PE | | PE |

The jumpers in the distributor enable the potentials of 17 and 19 or 18 and 20 to be bridged Contacts 6 and 7 are bridged in the 8-pole M12 in order to increase the current-carrying capacity. total current per M12: 2 A,
signal current per pin: 1 A

### Ordering data

| Type | Qty. | Order No. |
|---|---|---|
| Complete module: SAI-4-M 8P M12 | 1 | **1807640000** |
| Base separate: SAI-4-M M12 UT | 1 | **1807641000** |
| Matching hood passive: SAI-4/6/8-MH-BL3.5 | 1 | **1724750000** |

**Technical information:** The distributor does not include any signalling LEDs.
Supply LEDs and electrical isolation are provided

# Fixed cable version

## Fixed cable version

This distributor includes the option of attaching either a PNP sensor or an NPN sensor with 2 or 3 conductor connection to an M12 socket.

Eight inputs are available in total. In the case of a switched sensor, a + signal on the corresponding wire is connected through and the appropriate LED is illuminated.

The upper LED "N" is illuminated for NPN sensors and the lower LED "P" for PNP sensors. Do not connect a T-piece to the M12 socket.

The existing M12 plug-in connectors are wired in such a manner that the PNP sensor can be connected to pin 4 and the NPN sensor to pin 2.

The distributor has eight channels and 5 m of cable. Other versions are also available.

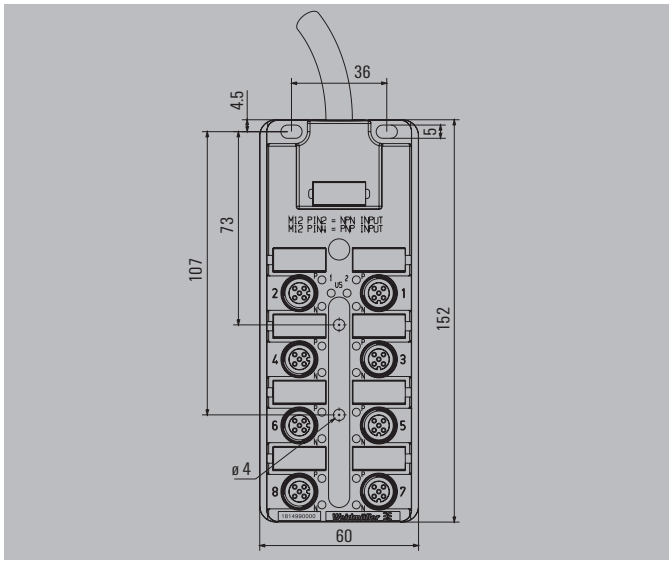


## Pin assignment

| M12 socket | Pin | Function | Pin | Function | Output | Wire colour | Wire size |
|---|---|---|---|---|---|---|---|
| 1 | 4 | PNP | 2 | NPN | 1 | white | 0.34 mm² |
| 2 | 4 | PNP | 2 | NPN | 2 | green | 0.34 mm² |
| 3 | 4 | PNP | 2 | NPN | 3 | yellow | 0.34 mm² |
| 4 | 4 | PNP | 2 | NPN | 4 | grey | 0.34 mm² |
| 5 | 4 | PNP | 2 | NPN | 5 | pink | 0.34 mm² |
| 6 | 4 | PNP | 2 | NPN | 6 | red | 0.34 mm² |
| 7 | 4 | PNP | 2 | NPN | 7 | black | 0.34 mm² |
| 8 | 4 | PNP | 2 | NPN | 8 | violet | 0.34 mm² |
| all | 1 | 24 V DC | | | | brown | 0.75 mm² |
| all | 3 | 0 V DC | | | | blue | 0.75 mm² |
| all | 5 | PE | | | | green/yellow | 0.75 mm² |

## M12 sockets

Pin 1 = +24 V DC
Pin 2 = NPN Input
Pin 3 = 0 V DC
Pin 4 = PNP Input
Pin 5 = PE

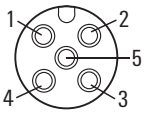


## Technical data

| | |
|---|---|
| Operating voltage | 24 V DC ±20 % |
| Operation temperature | 0...80 °C |
| Storage temperature | -25...80 °C |
| Ingress protection class | IP 68 |
| PUR cable | 5 m |
| Max. no-load current for 2-wire NPN sensors | 2 mA DC |

## Wiring diagram (schematic)

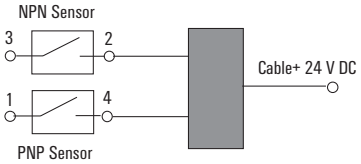


## Ordering data

| Type | Qty. | Order No. |
|---|---|---|
| SAI-8-F 5P NPN-PNP 5M | 1 | 1814990000 |

## Panel feed-through

## SAI-8-B 5P M12 SL

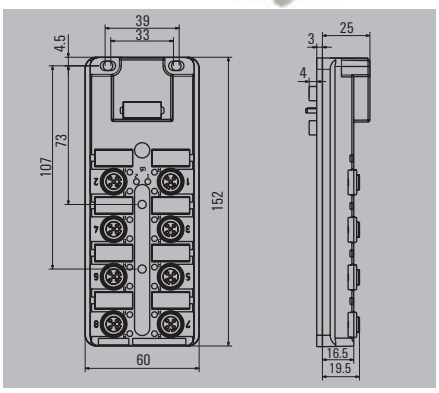


## Ordering data

| SAI-8-B 5P M12 SL | | 5-pole |
|---|---|---|
| **Type** | **QTY** | **Order No.** |
| SAI-8-B 5P M12 SL | 1 | **1847560000** |
| BL 3.5 connector included in delivery | | |

**Note**

## Technical data

| | |
|---|---|
| Operating voltage | 10...30 V |
| Current of continuous busbars | 2 A |
| max. current-carrying capacity per slot | 3 A |
| Total current | 10 A |
| Pollution severity | 3 |
| Protection degree | IP 65 |
| Ambient temperature range | -20...+90 °C |
| Housing main material | Pocan |
| Contact carrier material | PBT (UL 94 V0) |
| Base material of contacts | CuZn, pre-nickeled, gold-plated |
| screw socket | CuZn, nickel-plated |
| Housing colour | grey, RAL 7032 |
| Flammability class UL 94 | V-0 |
| Clamping range of hood-version | 0.08...1.5 mm² |
| Suitable for dragline cable (fixed cable connection) | |

## Dimensioned drawing

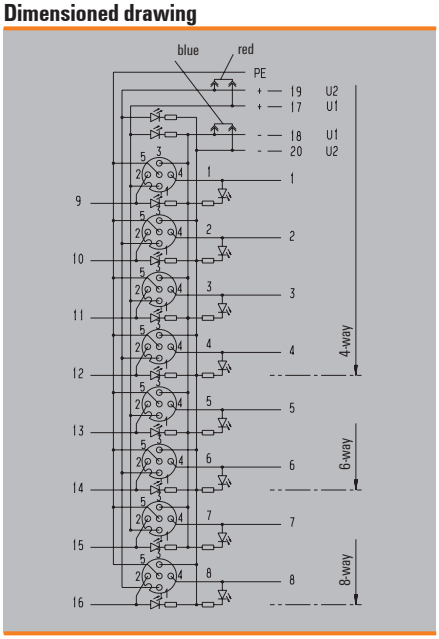


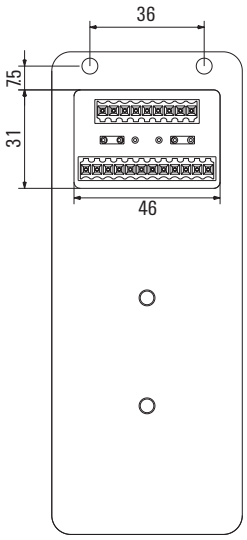

# Overview

### Distributors for system cabling

On site distribution is becoming more important. For example, in some places the IP 20 I/O module has to be mounted in housings directly on the machine. This is where a simplified form of wiring is essential.

### Weidmüller now offers two simple solutions

- A distributor equipped at the rear with a standardised ribbon cable connector, which is compatible with the Weidmüller PLC system interface.
- Weidmüller also offers a unique solution for feeding bus cables through panels that can be plugged in from both sides.

### Advantages

- Sensors and actuators can be plugged in from outside
- Through-panel version can be mounted in cut outs in steel panels
- Standardised ribbon cable connector inside
- Plus: M12 through-panel feed that can be plugged in from both sides

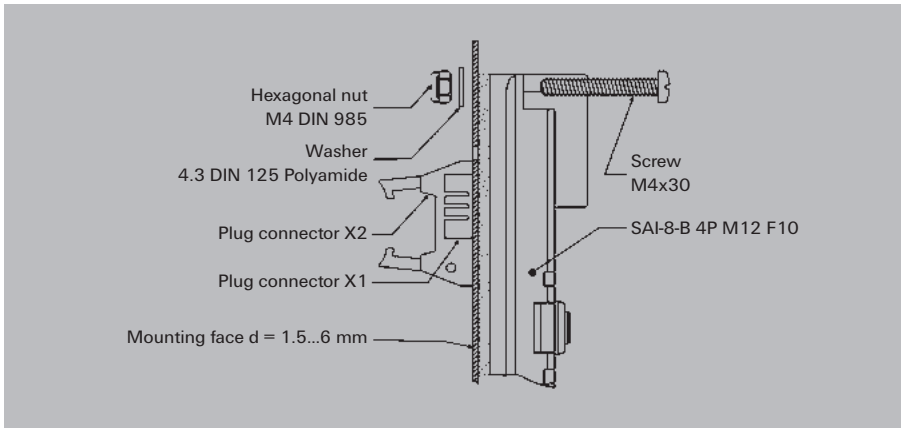


### Drilling template

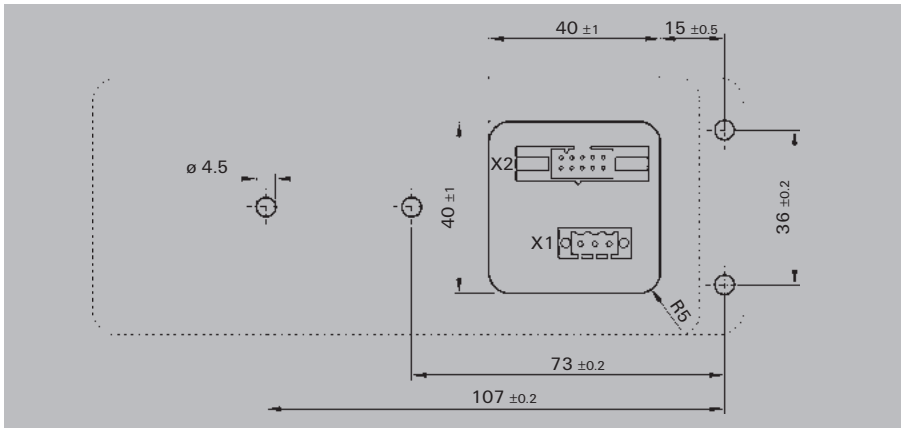

## Advantages of system cabling

### Fast

- Time saving installation
- Reduces commissioning and trouble-shooting times
- On site wiring cuts wiring costs

### Safe

- Reduces installation errors
- Using system cables instead of individual wires improves clarity in control cabinets
- Direct marking corresponding to the PLC

### Variability

- Additional I/O modules available
- Cable length options
- Easy replacement of I/O interfaces provides flexibility

### Contact assignment
### Male connector X1

| M12 socket | | Male connector X1 |
|---|---|---|
| 1 ... 8 | Pin 1 | U + |
| 1 ... 8 | Pin 3 | U – |
| 1 ... 8 | Pin 5 | PE |

**Male connector X1**

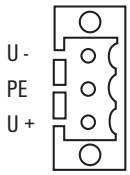


**M12 socket**

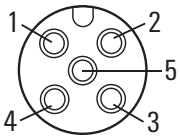


### Contact assignment
### Male connector X2

| M12 socket | | Male connector X2 |
|---|---|---|
| 1 | Pin 4 | 1 |
| 2 | Pin 4 | 2 |
| 3 | Pin 4 | 3 |
| 4 | Pin 4 | 4 |
| 5 | Pin 4 | 5 |
| 6 | Pin 4 | 6 |
| 7 | Pin 4 | 7 |
| 8 | Pin 4 | 8 |
| 1 – 8 | Pin 1 | 9 |
| 1 – 8 | Pin 3 | 10 |

**Male connector X2**

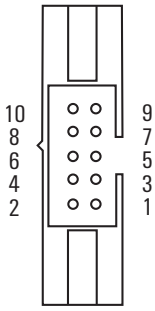


**Note:**
You will find further products for Interface units and PLC solutions in the Electronic catalogue 4.5.

### Technical data

| | |
|---|---|
| Operating voltage | 10 – 30 V (DC) |
| Outputs | max. 1 A per channel / max. 8 A in total |
| Inputs | max. 1 A in total |
| **Mounting conditions** | |
| Mounting surface | sheet steel, flat, min. 1.5 mm thick, or panels with at least equivalent stability, max. 6 mm thick |
| Surface temperature | max. 40 °C |
| Ingress protection class | IP 67/IP 68 only in conjunction with control cabinets with equivalent class of protection |
| Fixings | 4 screws + washers + nuts / torque: 0.8 Nm |
| **Note:** | Connect the male connector 3.5 (X1) when using actuators |

### Ordering data

| | Type | Qty. | Order No. |
|---|---|---|---|
| Distributor | SAI-8-B 4P M12 F10 | 1 | 1812170000 |
| Male connector X1 | BL 3.50/07/180 SN DKGN BX | 50 | 1606530000 |

# Pre-assembled hood version

In some cases, it can be advantageous to receive the hoods in pre-assembled form.
Here MF means: basic modules are supplied along with assembled hoods.
Here MHF are the assembled hoods only.
The wire cross-sections are 3 x 1 mm² and n x 0.34 mm². The quality of conduction is identical to that of fixed cable distributors.
Technical data can be found on pages W.2 and W.9

### SAI distributor with pre-assembled hood
### Colour-coded cable

**Ordering data** — 4-pole

| Type | Length | Order No. |
|---|---|---|
| 8-channel | | |
| SAI-8-MF 4P PUR 5M | 5 m | 1799960000 |
| SAI-8-MF 4P PUR 10M | 10 m | 1789190000 |

**Ordering data** — 5-pole

| Type | Length | Order No. |
|---|---|---|
| 4-channel | | |
| SAI-4-MF 5P PUR 5M | 5 m | 1804600000 |
| SAI-4-MF 5P PUR 10M | 10 m | 1804580000 |
| 8-channel | | |
| SAI-8-MF 5P PUR 5M | 5 m | 1804590000 |
| SAI-8-MF 5P PUR 10M | 10 m | 9457430000 |
| 8-channel, without initiator LED | | |
| SAI-8-MF 5P PUR 5M OL | 5 m | 9457350000 |

### Pre-assembled hood
### Colour-coded cable

**Ordering data** — 4-pole

| Type | Length | Order No. |
|---|---|---|
| SAI-4/6/8-MHF 4P PUR 4M | 4 m | 1791450400 |
| SAI-4/6/8-MHF 4P PUR 6M | 6 m | 1791450600 |
| SAI-4/6/8-MHF 4P PUR 9M | 9 m | 1791450900 |
| SAI-4/6/8-MHF 4P PUR14M | 14 m | 1791451400 |
| SAI-4/6/8-MHF 4P PUR20M | 20 m | 1791452000 |
| SAI-4/6/8-MHF 4P PUR28M | 28 m | 1791452800 |
| SAI-4/6/8-MHF 4P PUR34M | 34 m | 1791453400 |

**Matching base module**

| Type | Qty. | Order No. |
|---|---|---|
| SAI-4-M-4PM12UT | 1 | 1705921000 |
| SAI-6-M-4PM12UT | 1 | 1705931000 |
| SAI-8-M-4PM12UT | 1 | 1705941000 |

### Pre-assembled hood

**Ordering data** — 5-pole

| Type | Length | Order No. |
|---|---|---|
| SAI-4/6/8-MHF 5P PUR 4M | 4 m | 1791460400 |
| SAI-4/6/8-MHF 5P PUR 6M | 6 m | 1791460600 |
| SAI-4/6/8-MHF 5P PUR 9M | 9 m | 1791460900 |
| SAI-4/6/8-MHF 5P PUR14M | 14 m | 1791461400 |
| SAI-4/6/8-MHF 5P PUR16M | 16 m | 1791461600 |
| SAI-4/6/8-MHF 5P PUR20M | 20 m | 1791462000 |
| SAI-4/6/8-MHF 5P PUR28M | 28 m | 1791462800 |
| SAI-4/6/8-MHF 5P PUR34M | 34 m | 1791463400 |
| SAI-4/6/8-MHF 5P PUR40M | 40 m | 1791464000 |
| SAI-4/6/8-MHF 5P PUR50M | 50 m | 1791465000 |
| SAI-4/6/8-MHF 5P PUR55M | 55 m | 1791465500 |

**Matching base module**

| Type | Qty. | Order No. |
|---|---|---|
| SAI-4-M-5PM12UT | 1 | 1701231000 |
| SAI-6-M-5PM12UT | 1 | 1701241000 |
| SAI-8-M-5PM12UT | 1 | 1701251000 |

**Protective cap for hooded distributor, empty,**
**Terminal rail foot for distributor**

## SAI-4/6/8-MH LEER

## SAI-TS35 MF

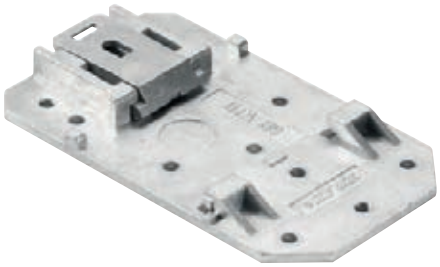

### Ordering data

| Mounting hood | |
|---|---|
| | Empty |
| **Note** | |

**SAI-4/6/8-MH LEER** — **4-pole**

| Type | QTY | Order No. |
|---|---|---|
| SAI-4/6/8-MH LEER | 1 | 1783460000 |

| Type | QTY | Order No. |
|---|---|---|
| SAI-TS35 MF | 1 | 1917400000 |

### Dimensioned drawing

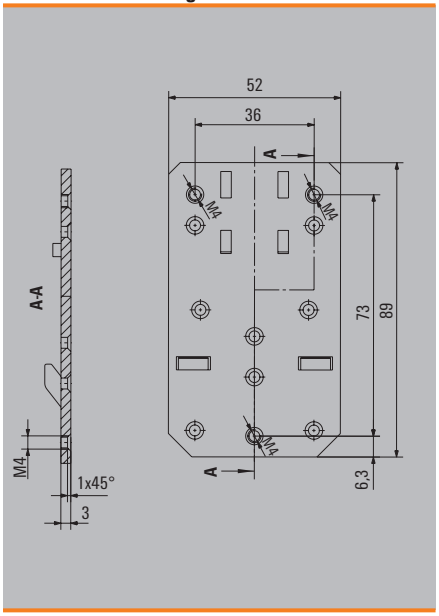

# SAI-M8

Weidmüller offers two different series for the M8 range. Both of these series offer key advantages: while one is optimised for size, the other has a patented shape and protected design that make it easy to handle. The SAI M8 product line is available with up to 12 plug in slots (as a fixed-cable version) and with up to 10 plug-in slots (as a pluggable version). The housings can be screwed on from the side or from the top which makes them more versatile. They are durable and well-sealed with a sturdy, fully encapsulated construction.

These single row distributors are easy to handle; their compact shape makes them one of the smallest product solutions available on the market. The hooded distributor is a favourite from the line or ergonomic distributors (also nicknamed the hedgehog distributor). The cable outlet is customisable and can exit from the top or from the back. These distributors are also fully encapsulated.

## Easily accessible

The side-mounted M8 connector ensures very convenient handling

## Directly on the PCB

Custom versions are also available. This is the PCB connection module.

## Space-saving

The line version has a very small size.

# Overview

## Fixed cable version

## Hood version

## M23 version

**Compact dimensions, readily accessible M8 connections, eye-catching design**

The unconventional design of this generation of SAI M8 distributors catches the eye immediately. Their shape is helpful because in this patented design the sockets are no longer arranged in simple rows. Instead, some are on 45° bevelled surfaces. That considerably improves the accessibility of the screw connections for the sensor and actuator cables. Ease of use, compact dimensions and the eye catching design are the obvious advantages of this M8 generation.

The following variations are available:

- SAI M8 distributor with removable connection hood; the bus cable can be connected either vertically or horizontally
- SAI M8 distributor with permanently attached, pre-assembled bus cable, 5 or 10 m long; this version is particularly slim and is therefore ideal for mounting in confined spaces
- SAI M8 distributor with metal plated M23 thread

# SAI-M8-Line

## M8 distributor with M12 outlet

## M8 distributor line / fixed-cable version

## M8 distributor with solder pins

## Extra-narrow M8 distributor for confined spaces

Single-row M8 distributors are the smallest sensor-actuator modules currently available with this thread size and it is precisely their size that is a decisive factor for applications and this form has become very popular. It is important to maintain the widest possible range of options. The SAI-M8-Line products can provide many interesting solutions:

- 4 and 6 channel modules with 8-pole M12 bus connection
- 8 and 10 channel modules with 12-pole bus connection
- 4, 10 and 12 channel distributors with fixed cable connection, the 4 and 8 channel modules also with 4 poles

It is important to note that the distributors can be labelled with the same markers as the Weidmüller 5 mm modular terminals. Therefore, no new tags have to be introduced. The modules can also be mounted sideways and are completely encapsulated.

Consequently, Weidmüller SAI distributors represent stability, robustness, flexibility and compactness - all in a single unit.

## PCB version of a complete SAI distributor

During the design of PCBs, it is often necessary to plug in different external data lines. There are a variety of connectors available for this purpose. For machine construction, the M8 and M12 connectors have become established as the standard solutions for sensor and actuator wiring. When attempting to mount these PCB-type connectors to the PCB, there is a significant risk that they will not be firmly attached to the board. Now, the SL version of the SAI distributor series solves this problem. The distributor can be completely mounted onto a PCB. It features soldering pins for the electrical connection to the PCB. The distributor itself should be slightly raised up during assembly by means of washers. This provides some clearance under the box. Naturally, the power supply channels are bridged in the distributor. This saves space on the PCB since there is no need for holes on any assembly surface. Thus the reverse side can be used for other purposes.

## Hooded/fixed cable version

### SAI-4/8-M

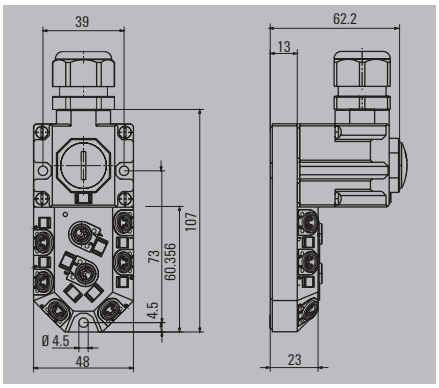


### SAI-4/8-F

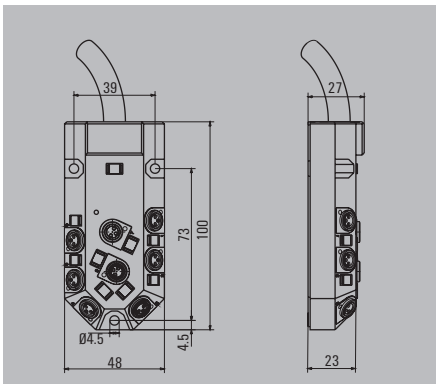


## Ordering data

| 3-pole | | SAI-4/8-M | | M8 |
|---|---|---|---|---|
| | | Type | QTY | Order No. |
| Cable length 5 m (with fixed cable version) | 4 channel | SAI-4-M 3P M8 | 1 | 1784680000 |
| | 8 channel | SAI-8-M 3P M8 | 1 | 1784670000 |
| Cable length 10 m (with fixed cable version) | 4 channel | | | |
| | 8 channel | | | |
| **4-pole** | | | | |
| Cable length 5 m (with fixed cable version) | 4 channel | SAI-4-M 4P M8 | 1 | 1784700000 |
| | 8 channel | SAI-8-M 4P M8 | 1 | 1784690000 |
| Cable length 10 m (with fixed cable version) | 4 channel | | | |
| | 8 channel | | | |
| **Note** | | Other versions on request | | |

| | | M8 |
|---|---|---|
| Type | QTY | Order No. |
| SAI-4-F 3P M8 PUR 5M | 1 | 1784640000 |
| SAI-8-F 3P M8 PUR 5M | 1 | 1784620000 |
| SAI-4-F 3P M8 PUR 10M | 1 | 1784630000 |
| SAI-8-F 3P M8 PUR 10M | 1 | 1784610000 |
| SAI-4-F 4P M8 PUR 5M | 1 | 1784600000 |
| SAI-8-F 4P M8 PUR 5M | 1 | 1784580000 |
| SAI-4-F 4P M8 PUR 10M | 1 | 1784590000 |
| SAI-8-F 4P M8 PUR 10M | 1 | 1784570000 |
| Other versions on request | | |

## Technical data

| | |
|---|---|
| Operating voltage | 10...30 V |
| Current of continuous busbars | 2 A |
| max. current-carrying capacity per slot | 2 A |
| Total current | 8 A |
| Pollution severity | 3 |
| Protection degree | IP 68 |
| Ambient temperature range | -20...+80 °C |
| Housing main material | Pocan |
| Contact carrier material | PBT (UL 94 V0) |
| Base material of contacts | CuZn, pre-nickeled, gold-plated |
| screw socket | CuZn, nickel-plated |
| Housing colour | grey, RAL 7032 |
| Flammability class UL 94 | V-0 |
| Clamping range of hood-version | 0.08...1 mm² |
| Suitable for dragline cable (fixed cable connection) | Yes |

## Dimensioned drawing

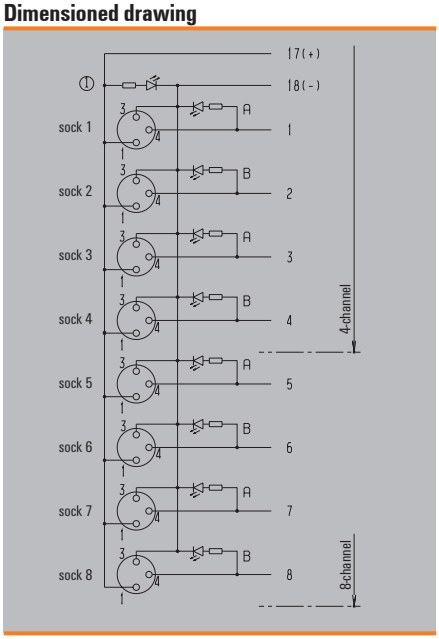


## Dimensioned drawing

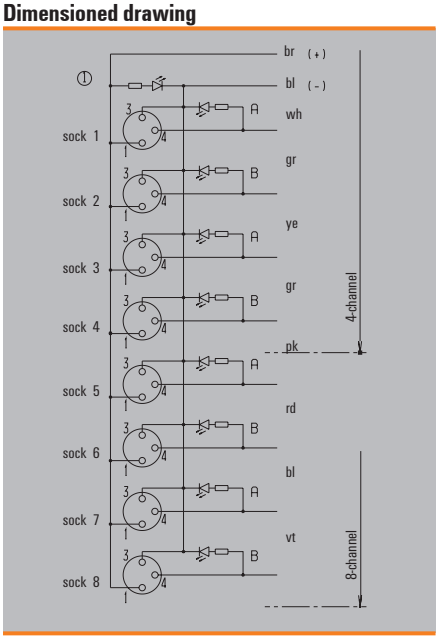

## With M23/ M16 outlet

### SAI-4/8-M23

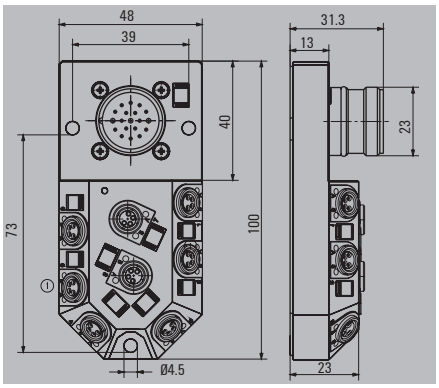


### SAI-8-M16

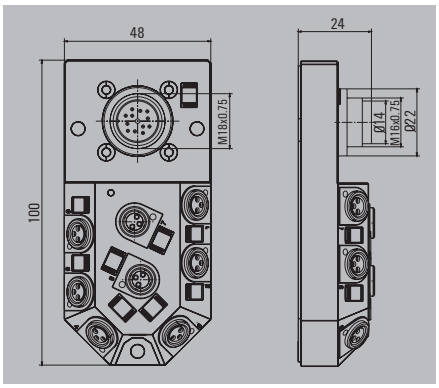


## Ordering data

| 3-pole | | SAI-4/8-M23 | M23 |
|---|---|---|---|
| | | **Type** | **QTY** | **Order No.** |
| | 8 channel | | | |
| **4-pole** | | | | |
| | 4 channel | SAI-4-M23 4P M8 | 1 | **1784660000** |
| | 8 channel | SAI-8-M23 4P M8 | 1 | **1784650000** |
| **Note** | | Other versions on request | | |

| | M16 |
|---|---|
| **Type** | **QTY** | **Order No.** |
| SAI-8-M16 3P M8 | 1 | **1795900000** |
| Other versions on request | | |

## Technical data

| | |
|---|---|
| Operating voltage | 10...30 V |
| Current of continuous busbars | 2 A |
| max. current-carrying capacity per slot | 2 A |
| Total current | 8 A |
| Pollution severity | 3 |
| Protection degree | IP 68 |
| Ambient temperature range | -20...+90 °C |
| Housing main material | Pocan |
| Contact carrier material | PBT (UL 94 V0) |
| Base material of contacts | CuZn, pre-nickeled, gold-plated |
| screw socket | CuZn, nickel-plated |
| Housing colour | grey, RAL 7032 |
| Flammability class UL 94 | V-0 |
| Clamping range of hood-version | |
| Suitable for dragline cable (fixed cable connection) | |

## Dimensioned drawing

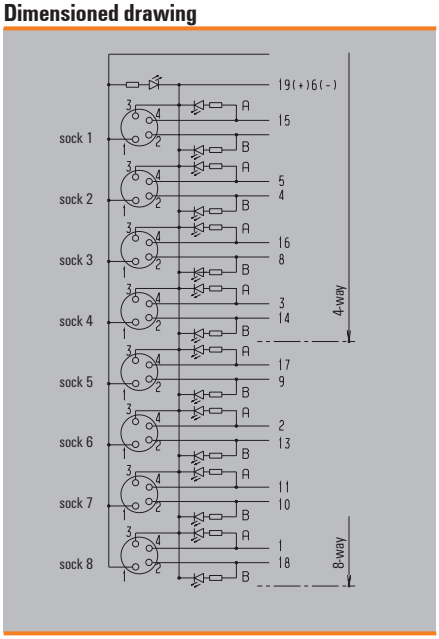


## Dimensioned drawing

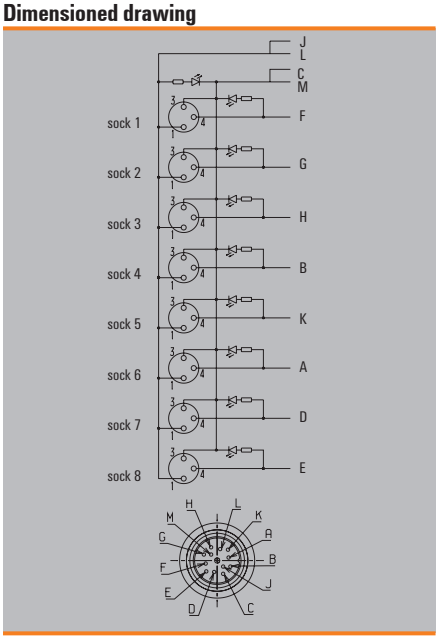

## Line

### SAI-4/6-S

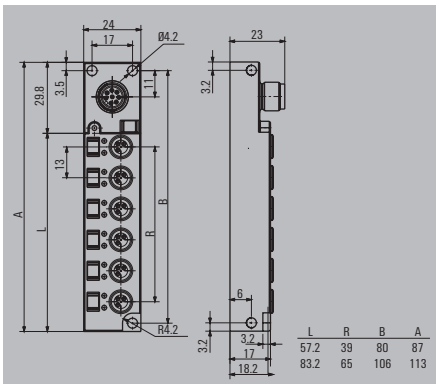


### SAI-5/8-S

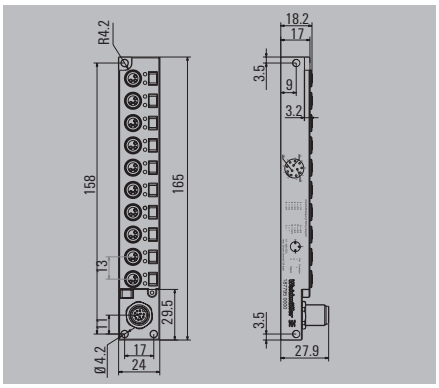


## Ordering data

| 3-pole | | SAI-4/6-S | | M12 |
|---|---|---|---|---|
| | | Type | QTY | Order No. |
| 4 channel | | SAI-4-S 3P M8 L | 1 | 1828740000 |
| 6 channel | | SAI-6-S 3P M8 L | 1 | 1828730000 |
| 8 channel | | | | |
| 10 channel | | | | |
| **3-pole without LED** | | | | |
| 4 channel | | SAI-4-S 3P M8 L OL | 1 | 1051760000 |
| 6 channel | | SAI-6-S 3P M8 L OL | 1 | 1932380000 |
| **Note** | | Other versions on request | | |

| | | M12 |
|---|---|---|
| Type | QTY | Order No. |
| | | |
| | | |
| SAI-8-S12 3P M8 L | 1 | 1871680000 |
| SAI-10-S12 3P M8 L | 1 | 1877950000 |
| | | |
| | | |
| | | |

## Technical data

| | |
|---|---|
| Operating voltage | 10...30 V |
| Current of continuous busbars | 1 A |
| max. current-carrying capacity per slot | 2 A |
| Total current | 6 A |
| Pollution severity | 3 |
| Protection degree | IP 68 |
| Ambient temperature range | -25...+80 °C |
| Housing main material | Pocan |
| Contact carrier material | PBT (UL 94 V0) |
| Base material of contacts | CuZn, pre-nickeled, gold-plated |
| screw socket | CuZn, nickel-plated |
| Housing colour | grey, RAL 7032 |
| Flammability class UL 94 | V-0 |
| Clamping range of hood-version | |
| Suitable for dragline cable (fixed cable connection) | Yes |

## Dimensioned drawing

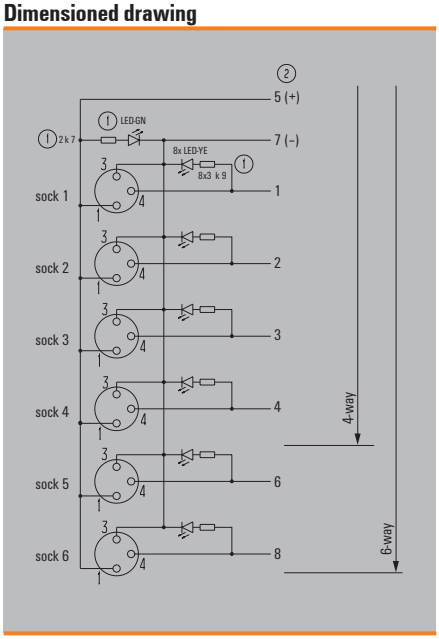


## Dimensioned drawing

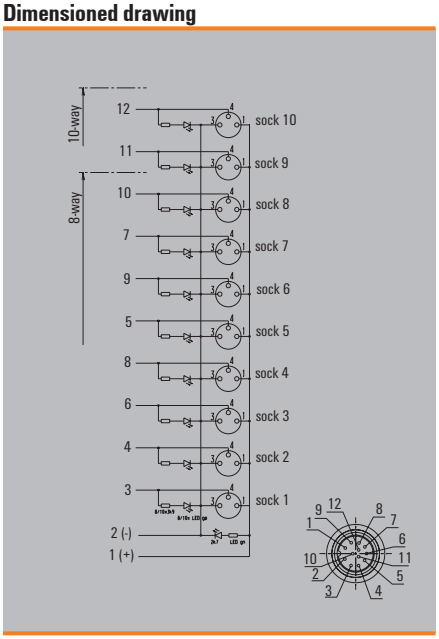

**Line**
**PCB version**

## SAI-6-S M8 L SL

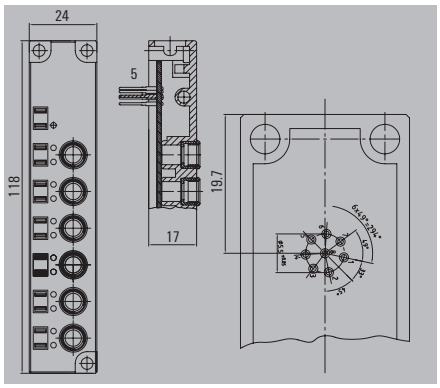


## Ordering data

| 3-pole | |
|---|---|
| | 6 channel |
| **Note** | |

## SAI-6-S M8 L SL — 3-pole

| Type | QTY | Order No. |
|---|---|---|
| SAI-6-S 3P M8 L SL | 1 | 1057720000 |

Other versions on request

## Technical data

| | |
|---|---|
| Operating voltage | 10...30 V |
| Current of continuous busbars | 1 A |
| max. current-carrying capacity per slot | 2 A |
| Total current | 6 A |
| Pollution severity | 3 |
| Protection degree | IP 68 |
| Ambient temperature range | -25...+80 °C |
| Housing main material | Pocan |
| Contact carrier material | PBT (UL 94 V0) |
| Base material of contacts | CuZn, pre-nickeled, gold-plated |
| screw socket | CuZn, nickel-plated |
| Housing colour | grey, RAL 7032 |
| Flammability class UL 94 | V-0 |
| Clamping range of hood-version | |
| Suitable for dragline cable (fixed cable connection) | Yes |

## Dimensioned drawing

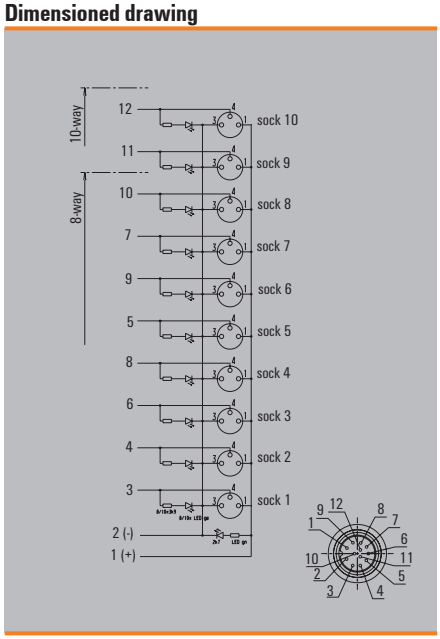

# M8 distributors

## Line / Fixed cable version

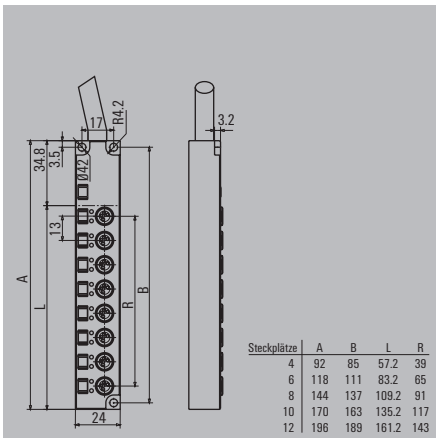


| Steckplätze | A | B | L | R |
|---|---|---|---|---|
| 4 | 92 | 85 | 57.2 | 39 |
| 6 | 118 | 111 | 83.2 | 65 |
| 8 | 144 | 137 | 109.2 | 91 |
| 10 | 170 | 163 | 135.2 | 117 |
| 12 | 196 | 189 | 161.2 | 143 |

## Ordering data

| Cable length 5 m (with fixed cable version) | SAI-4/6/8/10/12-L 3-pole Type | QTY | Order No. | SAI-4/6/8/10/12-L 4-pole Type | QTY | Order No. |
|---|---|---|---|---|---|---|
| 4 channel | SAI-4-F 3P M8 L 5M | 1 | 1828720000 | SAI-4-F 4P M8 L 5M | 1 | 1849680000 |
| 6 channel | SAI-6-F 3P M8 L 5M | 1 | 1828700000 | SAI-6-F 4P M8 L 5M | 1 | 1849700000 |
| 8 channel | SAI-8-F 3P M8 L 5M | 1 | 1828680000 | SAI-8-F 4P M8 L 5M | 1 | 1828620000 |
| 10 channel | SAI-10-F 3P M8 L 5M | 1 | 1828660000 | | | |
| 12 channel | SAI-12-F 3P M8 L 5M | 1 | 1828640000 | | | |
| **Cable length 10 m (with fixed cable version)** | | | | | | |
| 4 channel | SAI-4-F 3P M8 L 10M | 1 | 1828710000 | SAI-4-F 4P M8 L 10M | 1 | 1849690000 |
| 6 channel | SAI-6-F 3P M8 L 10M | 1 | 1828690000 | SAI-6-F 4P M8 L 10M | 1 | 1849670000 |
| 8 channel | SAI-8-F 3P M8 L 10M | 1 | 1828670000 | SAI-8-F 4P M8 L 10M | 1 | 1828610000 |
| 10 channel | SAI-10-F 3P M8 L 10M | 1 | 1828650000 | | | |
| 12 channel | SAI-12-F 3P M8 L 10M | 1 | 1828630000 | | | |
| **Note** | | | | | | |

## Technical data

| | |
|---|---|
| Operating voltage | 10...30 V |
| Current of continuous busbars | 1 A |
| max. current-carrying capacity per slot | 2 A |
| Total current | 6 A |
| Pollution severity | 3 |
| Protection degree | IP 68 |
| Ambient temperature range | -25...+80 °C |
| Housing main material | Pocan |
| Contact carrier material | PBT (UL 94 V0) |
| Base material of contacts | CuZn, pre-nickeled, gold-plated |
| screw socket | CuZn, nickel-plated |
| Housing colour | grey, RAL 7032 |
| Flammability class UL 94 | V-0 |
| Clamping range of hood-version | |
| Suitable for dragline cable (fixed cable connection) | Yes |

## Wiring diagram

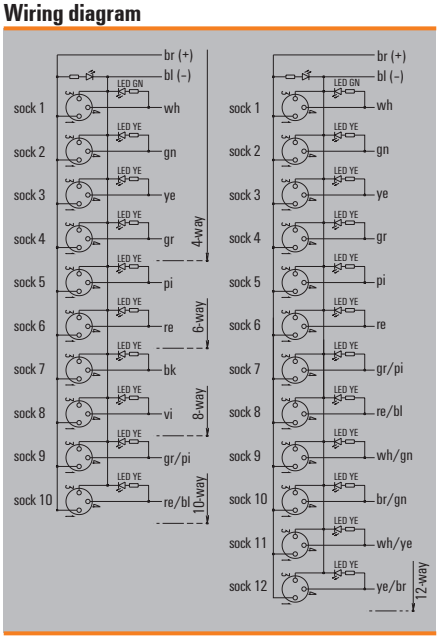


## Wiring diagram

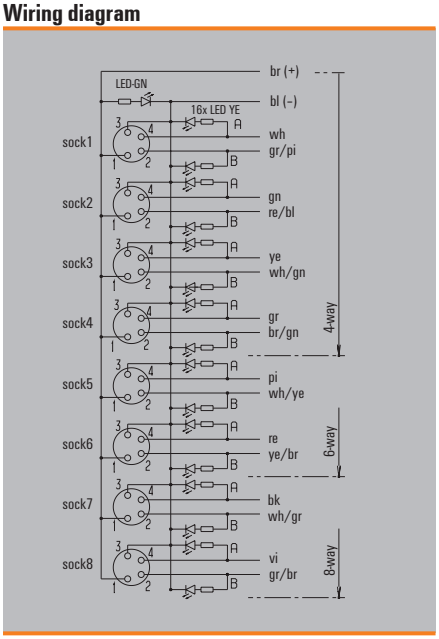

# Overview

### M5-Line with M12 outlet

### Fixed cable version

### M5-Line with M16 outlet

**The Weidmüller SAI-M5 distributors are currently the smallest SAI distributors in the world**

Whether it is mobile phones or computers, as functionality increases, so the size of components decreases. Today, machine designers face the same problem. Space is at a premium, even in large machines, particularly where the sensor components are located. In the past the M8 distributor solved these problems. However, these units are now considered to be too large. The first move was to make the sensors smaller. Then it was the turn of the cables and distributors.

These extremely small units are surprisingly easy to handle. M5 plug in connectors have three or four poles and are thus equivalent to M8 plug-in connectors.

However, unlike the M8 plug in connectors, the different M5 pole numbers are compatible with each other. The advantage is obvious: 4 pole units which are required, for example, for antivalent sensors can now be plugged into one and the same distributor with standard NOC applications. In the M8 system special adapters are required. In addition to size, the module weight is also critical in some applications.
For example, the speed of a handling machine is influenced by the weight of the moving parts. The M5 system offers outstanding benefits with its unrivalled small size and light weight.

There is no version for custom bus cable assembly for this SAI distributor, which is delivered with a plug in connection and a fixed cable connection. A compact 12 pole M12 plug in connector has been developed as a plug in connection specifically for this distributor.

This ratio of surface area to number of connections is reminiscent of the computer industry. The M16 bus connections can be integrated in the module as an option, so that the SAI M5 can be used as a combined SAI system. A Y-configuration is possible in conjunction with the M16 splitter.

The fixed cable version is particularly suitable for standard applications where the distributor is permanently installed and the electrical installation does not have to be disconnected after installation.

## MM5 distributors

## Quality comes in little packages...

This is the motto applied by Weidmüller when developing its M5 plug in connectors. The outstanding feature of these connectors is their tiny size. Attention has also been given to stability and good conductivity.

For a comparison of sizes, take a look at the photos on the left.

These products are ideal for handling machines where light weight and small size are vital.

## Comparing the sizes

**M12** **M8** **M5**

**M12** **M8** **M5**

## Marking

Each channel is marked with the channel number. Each initiator LED can be exactly allocated with the letters A and B. In addition, the distributor and every channel can be marked.

## Line

### SAI-4/8-F

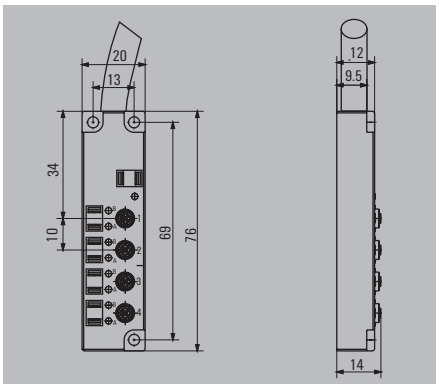


### SAI-4/8-S

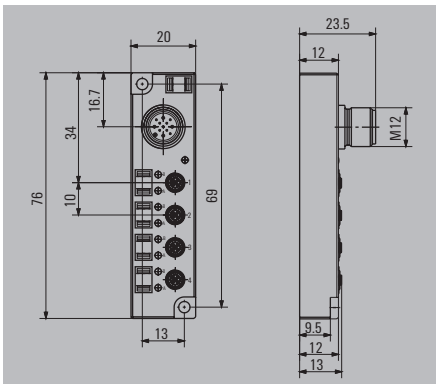


## Ordering data

| SAI-4/8-F | | M5 |
|---|---|---|
| **Type** | **QTY** | **Order No.** |
| **3-pole** | | |
| Cable length 5 m (with fixed cable version) 4 channel | | |
| 8 channel | | |
| Cable length 10 m (with fixed cable version) 4 channel | | |
| 8 channel | | |
| **4-pole** | | |
| Cable length 5 m (with fixed cable version) 4 channel | | |
| 8 channel | | |
| Cable length 10 m (with fixed cable version) 4 channel | | |
| 8 channel | | |
| SAI-4-F 3P M5 L5M | 1 | 1851740000 |
| SAI-8-F 3P M5 L5M | 1 | 1851760000 |
| SAI-4-F 3P M5 L10M | 1 | 1845820000 |
| SAI-8-F 3P M5 L10M | 1 | 1845830000 |
| SAI-4-F 4P M5 L5M | 1 | 1851770000 |
| SAI-8-F 4P M5 L5M | 1 | 1851750000 |
| SAI-4-F 4P M5 L10M | 1 | 1845800000 |
| SAI-8-F 4P M5 L10M | 1 | 1845810000 |
| **Note** | | |
| Other versions on request | | |

| | | M5 |
|---|---|---|
| **Type** | **QTY** | **Order No.** |
| SAI-8-S 3P M5 | 1 | 1845850000 |
| SAI-4-S 4P M5 | 1 | 1845840000 |
| Other versions on request | | |

## Technical data

| | |
|---|---|
| Operating voltage | 10...30 V |
| Current of continuous busbars | 1 A |
| max. current-carrying capacity per slot | 3 A |
| Total current | 3 A |
| Pollution severity | 3 |
| Protection degree | IP 67 |
| Ambient temperature range | -25...+80 °C |
| Housing main material | PA 6 GF |
| Contact carrier material | Nickel-plated CuZn |
| Base material of contacts | Au (Gold) |
| screw socket | CuZn, nickel-plated |
| Housing colour | grey, RAL 7032 |
| Flammability class UL 94 | V-0 |
| Clamping range of hood-version | |
| Suitable for dragline cable (fixed cable connection) | Yes |

## Dimensioned drawing

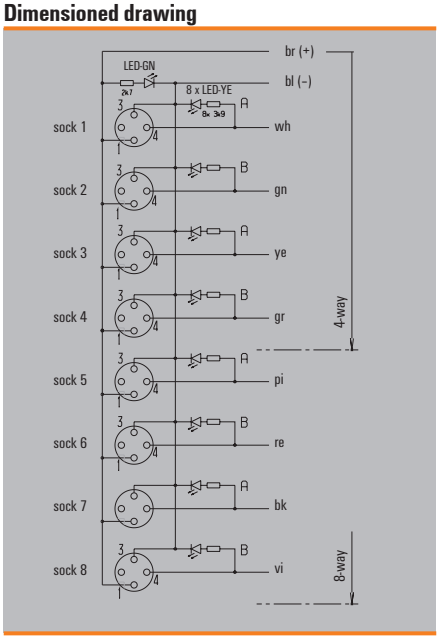


## Dimensioned drawing

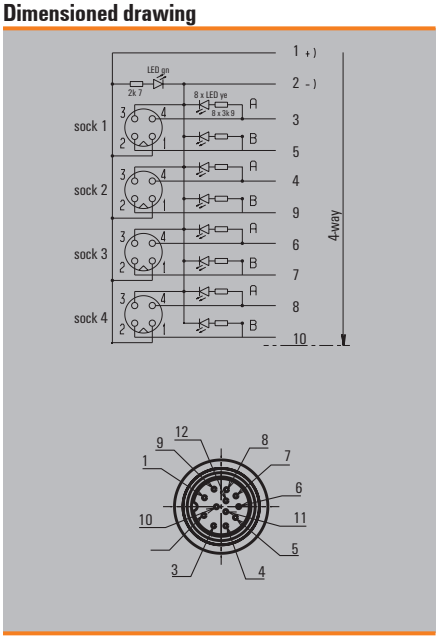

## Line

## SAI-4/8-S16

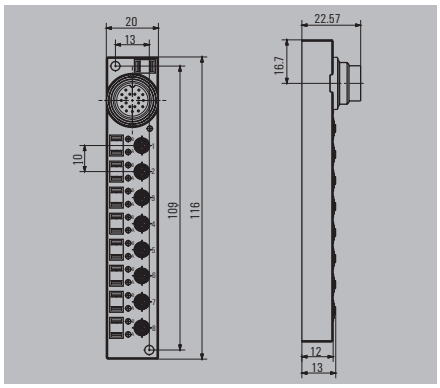


## Ordering data

| SAI-4/8-S16 | | M5 |
|---|---|---|
| **Type** | **QTY** | **Order No.** |
| **3-pole** | | |
| 4 channel | | |
| 8 channel | | |
| SAI-4-S16 3P M5 | 1 | **1845890000** |
| SAI-8-S16 3P M5 | 1 | **1845880000** |
| **4-pole** | | |
| 4 channel | | |
| 8 channel | | |
| SAI-4-S16 4P M5 | 1 | **1845870000** |
| SAI-8-S16/19P 4P M5 | 1 | **1845860000** |
| **Note** | | |
| 1845870000,1845880000 and 1845890000 with M16 / 12-pole<br>1845860000 with M16 / 19-pole | | |

## Technical data

| | |
|---|---|
| Operating voltage | 10...30 V |
| Current of continuous busbars | 1 A |
| max. current-carrying capacity per slot | 3 A |
| Total current | 3 A |
| Pollution severity | 3 |
| Protection degree | IP 67 |
| Ambient temperature range | -25...+80 °C |
| Housing main material | PA 6 GF |
| Contact carrier material | Nickel-plated CuZn |
| Base material of contacts | Au (Gold) |
| screw socket | CuZn, nickel-plated |
| Housing colour | grey, RAL 7032 |
| Flammability class UL 94 | V-0 |
| Clamping range of hood-version | |
| Suitable for dragline cable<br>(fixed cable connection) | |

## Dimensioned drawing

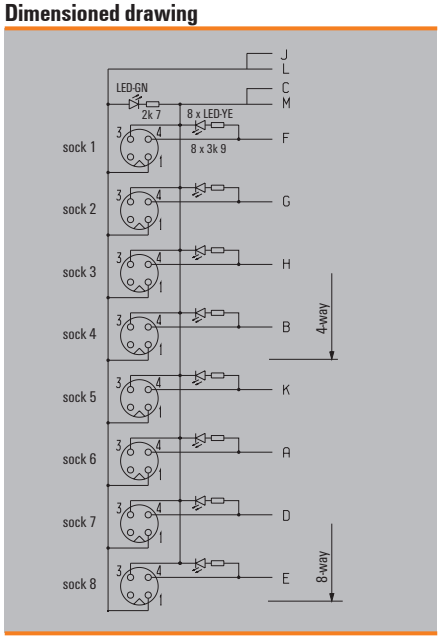

# SAI Ex i distributor for Ex i zone 1

## Hooded version with 4 plug-in slots

## Hooded version with 8 plug-in slots

## SAI distributor for Ex i zone 1

Available for the first time: passive SAI distributors with M12 connection technology in IP 68 ingress protection classification for Ex i hazardous area applications.

The SAI Ex i distributor is certified for zone 1 of potentially explosive areas, even for G and D zones.

SAI Ex i distributors are available with four or eight connections for simple connection of NAMUR sensors. This makes distribution boxes with certification a thing of the past. These modules are suitable for process engineering, but also for “standard” machine applications. The versions are available with or without yellow LEDs.

The distributors are provided with a removable connection hood. This detail also helps to reduce costs because only the defective bus cable needs to be replaced and not the entire distributor.

## Hood version

Zone 1

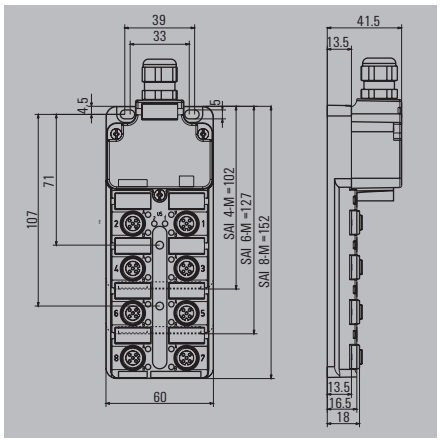


## Ordering data

| Complete modules | | SAI-4/8-M Ex i | | 4-pole | SAI-4/8-M Ex ia | | 5-pole |
|---|---|---|---|---|---|---|---|
| | | Type | QTY | Order No. | Type | QTY | Order No. |
| | 4 channel | SAI-4-M 4P Exi Z1 IL | 1 | 1868360000 | SAI-4-M 5P M12 Ex ia | 1 | 1896050000 |
| | 6 channel | | | | SAI-6-M 5P M12 Ex ia | 1 | 1896070000 |
| | 8 channel | SAI-8-M 4P Exi Z1 IL | 1 | 1868370000 | SAI-8-M 5P M12 Ex ia | 1 | 1896090000 |
| Without initiator LED | 4 channel | SAI-4-M 4P Exi Z1 OL | 1 | 1868350000 | | | |
| Without initiator LED | 8 channel | SAI-8-M 4P Exi Z1 OL | 1 | 1894380000 | | | |
| Note | | | | | | | |

## Technical data

| | |
|---|---|
| Operating voltage | 10...30 V |
| Current of continuous busbars | 100 mA |
| max. current-carrying capacity per slot | 100 mA |
| Total current | 2.3 A |
| Pollution severity | 3 |
| Protection degree | IP 68 |
| Ambient temperature range | -20...+40 °C |
| Housing main material | Pocan |
| Contact carrier material | PBT (UL 94 V0) |
| Base material of contacts | CuZn, pre-nickeled, gold-plated |
| screw socket | CuZn, nickel-plated |
| Housing colour | grey, RAL 7032 |
| Flammability class UL 94 | V-0 |
| Clamping range of hood-version | 0.1...1.5 mm² |
| Suitable for dragline cable (fixed cable connection) | |

## Wiring diagram

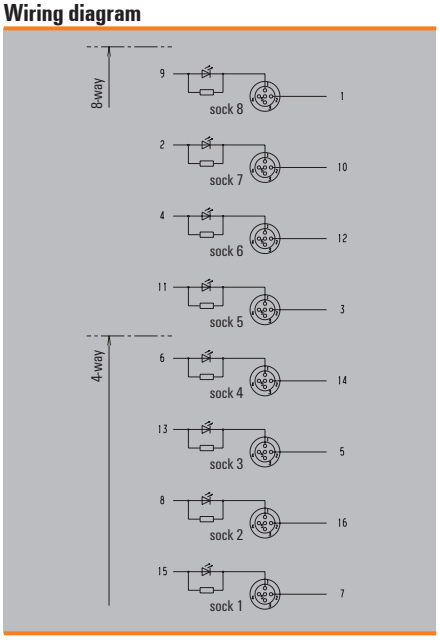


## Wiring diagram

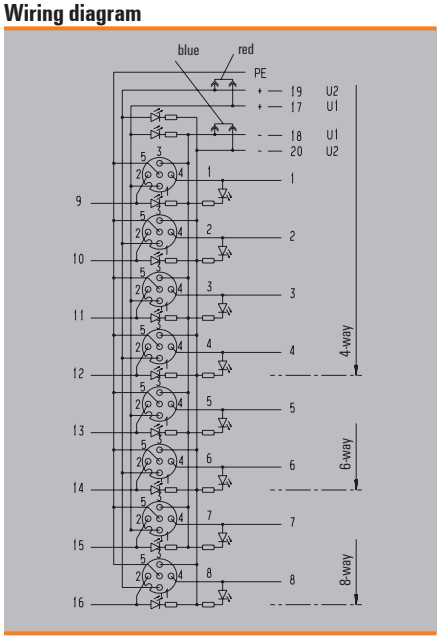

# M23 Connectors and cables


| | | |
|---|---|---|
| **M23 Connectors and cables** | Product Description: SAI M23 Connectors | J.2 |
| | Contact assignment | J.7 |
| | Technical data | J.8 |
| | Overview | J.10 |
| | M23 connector for signal transmission | J.12 |
| | M23 connector for power transmission | J.26 |
| | Moulded M23 cables | J.30 |
| | SAI distributor M12 with M23 | J.31 |
| | SAI distributor M8 with M23 | J.33 |
| | Installation instructions – Signal connectors | J.34 |
| | Installation instructions – Power connectors | J.39 |
| | M23 connector | J.43 |

# SAI M23

**A comprehensive product line of connectors, distributors and cables**

M23 connectors are mainly used for connecting electrical drives and servo-motors into industrial automation applications.
The M23 connectors are very easy to handle and operate. In addition to the injection-moulded variants and the SAI distributors with M23 connectors, Weidmüller is now offering customisable versions and built in plugs.

## The M23 built in connector

The M23 built in connector provides a custom fit solution for building directly into the device.

## M23 connectors for crimping

M23 connectors are easy to handle and operate. This is supported by the type of crimping that is used.

## Robust metal housing

The M23 connectors feature an extra robust design.

## Solutions for power and signals

The extensive product line includes the key housing shapes, such as angled connectors, coupling connectors and device connectors.

**M23 connector for signal transmission**
Housings

**M23 connector for signal transmission**
Built in connector

**M23 connector for power transmission**
Housings

**M23 connector for power transmission**
Built-in connector

**Moulded M23 cables**

**SAI distributors**

# Product Description: SAI M23 Connectors

## Technology and requirements

The M23 connectors are mainly used for integrating electrical drives and servo motors into industrial automation facilities. The M23 designation is based on the thread diameter of the connector, as shown in Figures 1 and 2. With their wide variety of inserts and housings, these connectors are equally suited for applications involving signal or power transmission. Applications set in harsh industrial environments place strict requirements on the connector. Much is demanded of the housing, the inner insert and the connector contact. Thermal loads, physical loads, and loads from the transmitted electrical power are commonplace. M23 connectors are capable of carrying a load of up to 250/630 V at 9/30 A.

The connectors must be resistant to the penetration of all particles and substances. They must also comply with the required class of IP protection. The material used for manufacture must be resistant to acid and alkaline solutions that may be used during cleaning or production processes. Also it must not be possible for residues to accumulate in the plug which could later contaminate the production flow. It must not be possible for the plug components to loosen due to vibration. In addition, the cable and connector must have EMC shielding for some applications. This keeps external interference from influencing the signals and it also prevents the transmitted signals in the cable from interfering with other cables or components. The standards and directives (such as the German or European standards) that are followed are basically only recommendations concerning the composition of the connector. A so-called “cold standard” exists for the M23 connectors.

## Variants and designs

The variants can be generally classified according to their outer design, into either customisable types, or plastic moulded connectors with pre-connected cables. Both variants are available in male or female versions, and in straight or angled design. Different designs and inserts can be combined to fit the particular application so that an almost limitless variety of combinations is possible. The connector inserts are available in a variety of different pole counts and as either male or female versions. The pole counts also vary in that some contacts in the mating profile may have a larger cross-section than the others. Other types include the device connector variants which are used for contacting and connecting housings. These also come in a variety of designs. The metal alloy in use may differ depending on the particular type of application. For example, stainless steel is used for those variants that will be used in the food processing industry. Each connector is optionally available with EMC protection and a plastic surface.

## Customisable connectors

Customisable connectors are almost all manufactured from metal alloys. Variants with plastic housings or fitting nuts are rare and used mostly for customer-specific solutions. Customiseable connectors are made up of a housing, a plastic contact carrier, and the contacts themselves. The various housing types can be equipped with the corresponding contact carriers. The carriers differ in their number of poles and the arrangement of the poles. Different types of contacts may also be used within the contact carriers. The shape of the contacts is either male or female. There are also difference in the width, material, and connection system (such as soldered, crimped or screwed).



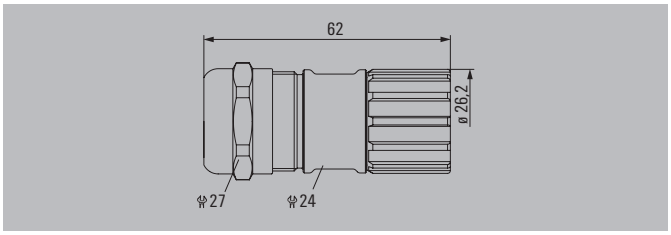


Figure 1: M23 cable connector

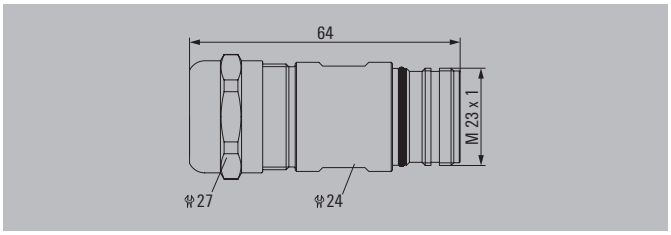


Figure 2: M23 coupling connector

This modular construction allows for a wide variety of combinations to fit any application type. Figure 3 shows the design and assembly of an M23 signal connector. Since the connector is usually put together in the field, the key requirement is that the connector is easy and reliable for the electrician to handle on-site. A good example of convenient handling is the integrated EMC shielding. An improved shield connection results because the shielding can be connected in less steps and with fewer tools. The complete assembly process must be clear and concise, and should only take a few steps.

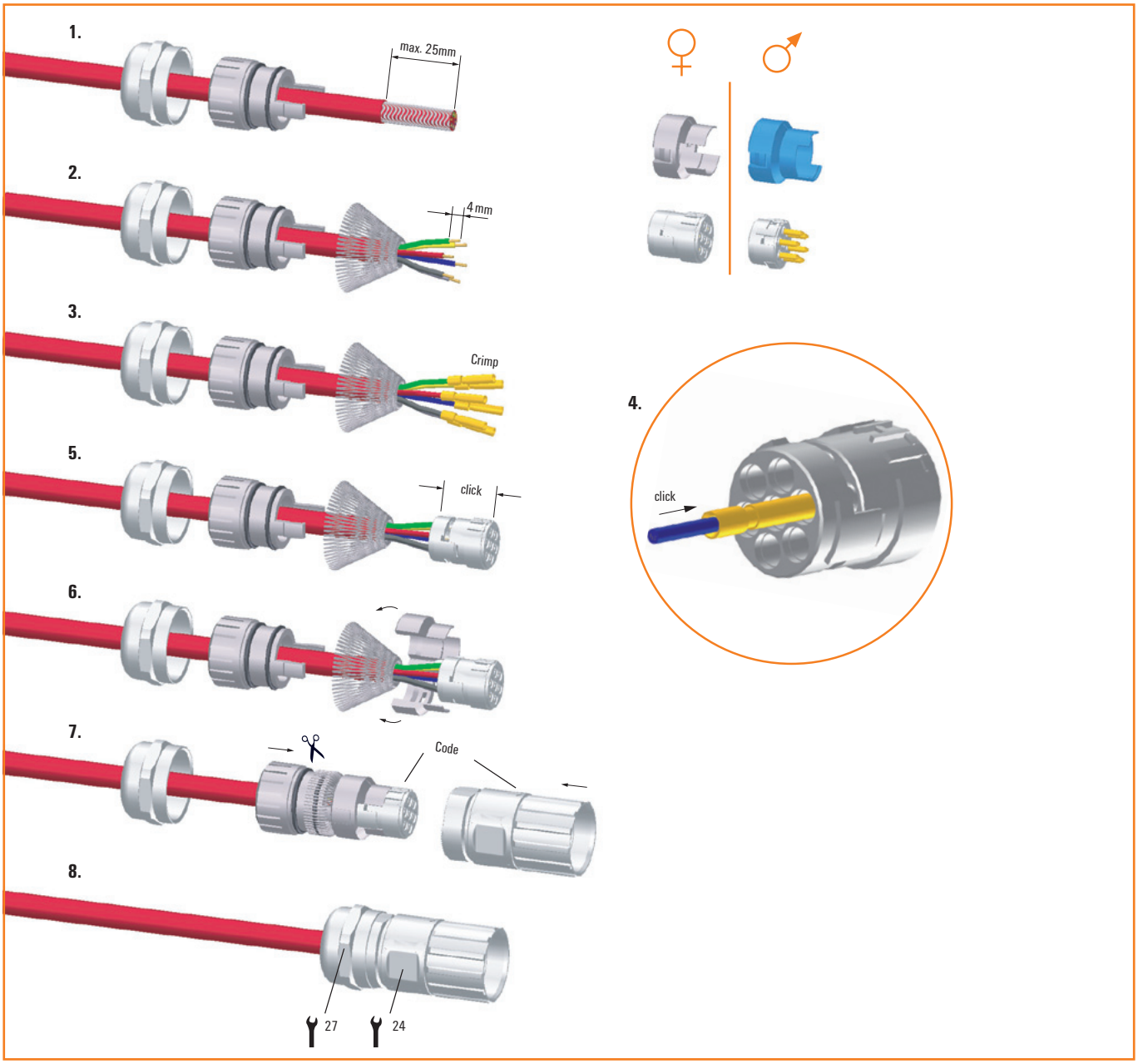


Figure 3: Design and assembly of an M23 connector

## Plastic injection moulded connector with connected cable

Plastic injection moulded cables are cables that have already been fitted with connectors. First the cables are connected with the contacts and then these are mounted into the contact carrier. Next, plastic injection moulding is used to cover the cable and contact carrier with a plastic moulding. This ensures a highly stable and well sealed connector housing. The connector must be destroyed for it to be disconnected from its cable. The connector's outer form and material is put together by a plastic processing tool.
The advantage of a moulded cable is that the connection between the cable and the connector has already been tested at the production factory. The electrician need only adjust the length. Depending on the application, he may choose to use another connector on the open end or connect the individual cable wires directly (for example, to a terminal block). The advantages of this variant type includes the inexpensive assembly of large batches, the high degree of automation and minimal amount of material used. High reliability and an excellent seal are two additional advantages.

Plastic injection-moulded M23 connector

## Connector usage and application

M23 connectors are mainly used for integrating within machine and facility construction applications. These applications require connections with a long life span and high reliability. The failure of a single connector could lead to the failure of the entire production line. It's important to avoid facility outages caused by a connector malfunction, so the machine and facility construction industry relies on connectors with the advantages listed above. Both signals and power must be transferred in such applications. The connector and the cable must be able to withstand harsh industrial conditions. Cables may be under stress from constant motion, in particular for applications involving robotics or dragline chains. Special cables with a specific maximum bending radius are used for such applications (for example, the bending radius may be 10d, i.e., ten times the cable diameter). When constructing a facility, a variety of connection scenarios are possible based on the particular conditions or adaptations of existing facilities. The length or configuration of the cable must be adapted to fit these conditions. If space is constricted, for instance, it may be necessary to replace a straight connector with an angled one.
Cables can be equipped with both a moulded (extruded) connector and a customisable connector. This ensures proper functionality while providing the flexibility to adapt to changing conditions on location. Safe connections can thus be established with any possible connector combination or at any protective class required. This gives the facility planner the safety he needs. And the electrician on-site can set up the facility properly because he has sufficient flexibility to adapt to uncertain conditions. For sensor systems, connectors with high pole counts are often used on SAI distributors. Individual sensors are connected to the distributors where the signals are then centralised. They are then transferred to the controller using a cable with an M23 connector. The most common use for transmitting power involves the connection of servo-motors in machines. M23 connectors are used for this purpose because of their sturdy and compact design and their high power-carrying capacities. Because of the size of the M23 connector, it can also be used in a hybrid version for transmitting both signals and power. The signal-carrying contacts are then shielded within the connector to ensure that the transmitted voltages do not interfere with the signals.

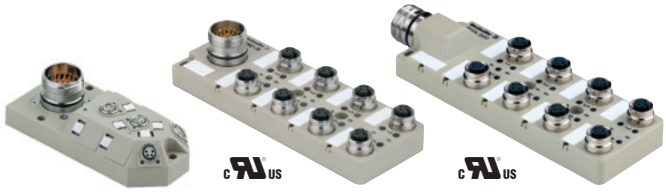

SAI distributor with M23 connector

# Contact assignment SAI M23

## M23 12- and 19-pole, for SAI distributors and cables

### 12-pole

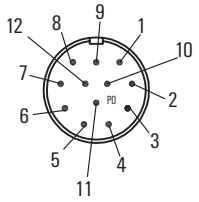


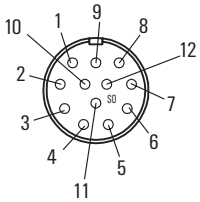


| Pole | Colour code | Plug-in station | Contact M12 |
|---|---|---|---|
| 1 | white | 1 | 4 |
| 2 | green | 2 | 4 |
| 3 | yellow | 3 | 4 |
| 4 | grey | 4 | 4 |
| 5 | pink | 5 | 4 |
| 6 | red | 6 | 4 |
| 7 | black | 7 | 4 |
| 8 | violet | 8 | 4 |
| 9 | blue (–) | 1–8 | 3 |
| 10 | blue (–) | 1–8 | 3 |
| 11 | brown (+) | 1–8 | 1 |
| 12 | green-yellow (PE) | 1–8 | 5 |

### 19-pole

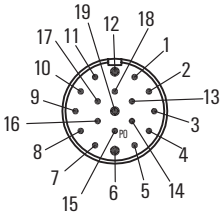


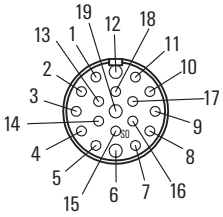


| Pole | Colour code | Plug-in station | Contact M12 |
|---|---|---|---|
| 1 | violet | 8 | 4 |
| 2 | red | 6 | 4 |
| 3 | grey | 4 | 4 |
| 4 | red/blue | 2 | 2 |
| 5 | green | 2 | 4 |
| 7 | grey/pink | 1 | 2 |
| 8 | white/green | 3 | 2 |
| 9 | white/yellow | 5 | 2 |
| 10 | white/grey | 7 | 2 |
| 11 | black | 7 | 4 |
| 13 | yellow/brown | 6 | 2 |
| 14 | brown/green | 4 | 2 |
| 15 | white | 1 | 4 |
| 16 | yellow | 3 | 4 |
| 17 | pink | 5 | 4 |
| 18 | grey/brown | 8 | 2 |
| 6 | blue (–) | 1–8 | 3 |
| 12 | green-yellow (PE) | 1–8 | 5 |
| 19 | brown (+) | 1–8 | 1 |

## Description code

| | |
|---|---|
| **Housing** | |
| G | Inner thread |
| K | Outer thread |
| W | angled |
| S | Signal connectors |
| L | Power connectors |
| 7/12 | Cable passage |
| **Inserts** | |
| BE | Female insert |
| SE | Male insert |
| 4/4 | Number of contacts, here for 4 sensor and 4 power contacts |
| **Contacts** | |
| KBC | Female contact |
| **Wire cross-section** | |
| 0.08/0.56 | 0.08 $mm^2$ – 0.56 $mm^2$ |
| 0.25/1.0 | 0.25 $mm^2$ – 1.0 $mm^2$ |
| 0.75/2.5 | 0.75 $mm^2$ – 2.5 $mm^2$ |
| **Moulded M23 cables** | |
| SAIS | Cable with male plug |
| SAIB | Cable with female plug |
| 12p | 12-pole |
| 19p | 19-pole |
| AN | angled |
| ST | straight |
| ...M | Length in metres |

## Contact partitioning

| Signal connectors<br>Type | 1 mm contact | 1.5 mm contact | 2 mm contact |
|---|---|---|---|
| 6-pole | | | 6 |
| 7-pole | | | 7 |
| 9-pole | 8 | | 1 |
| 12-pole | 12 | | |
| 16-pole | 16 | | |
| 17-pole | 17 | | |
| 19-pole | 16 | 3 | |
| **Power connectors**<br>**Type** | **1 mm contact** | **1.5 mm contact** | **2 mm contact** |
| 6-pole | | | 6 |
| 4+4-pole | 4 | | 4 |

Contacts for signal plugs cannot be used in inserts for power plugs and vice versa.

J

# Signal connectors

## Technical data

| Mechanical data | | |
|---|---|---|
| Housing | | Copper-Zinc alloy<br>Die Casting |
| Housing surface | | Nickel plated brass<br>other surface upon request |
| Inserts (for contacts) | | Thermoplastic Polyamid PA 6 (Nylon 6/6), PBT / Fire protection class V-0 |
| Contacts | | Copper-Zinc alloy |
| Contact surface at point of contact | | Nickel and gold plated (0.25 µm Au) |
| Minimum mating cycles | | > 1000 |
| Seals / O-Rings | | Buna-N standard<br>optional Viton® (Viton is a registered trademark of DuPont) |
| Temperature range | | -40 °C – 125 °C |
| Type of contacts | | Crimp, solder, dip-solder (PCB) |
| Protection, Imperviousness | | IP 67 / IP 69 K per EN 60 529 (connected) |
| Cable diameter range | | 3 – 17 mm |

| Electrical Data | | | | | | | | | | |
|---|---|---|---|---|---|---|---|---|---|---|
| Number of positions | | 6 | 7 | 9 | | 12 | 16 | 17 | 19 | |
| Number of contacts | | 6 | 7 | 8 | 1 | 12 | 16 | 17 | 16 | 3 |
| Contact-Ø | mm | 2 | 2 | 1 | 2 | 1 | 1 | 1 | 1 | 1.5 |
| Nominal current | A | 20 | 20 | 8 | 20 | 8 | 8 | 8 | 8 | 10 |
| Nominal voltage at pollution degree 2 | V~ | 630 | 630 | 500 | | 500 | 400 | 400 | 320 | |
| Nominal voltage at pollution degree 3 | V~ | 300 | 300 | 200 | | 200 | 160 | 160 | 100 | |
| Test voltage | V~ | 2500 | 2500 | 2500 | | 2500 | 1500 | 1500 | 1500 | |
| Insulation resistance | MΩ | $> 10^{10}$ | $> 10^{10}$ | $> 10^{10}$ | | $> 10^{10}$ | $> 10^{6}$ | $> 10^{6}$ | $> 10^{6}$ | |
| Max. contact resistance | mΩ | 3 | 3 | 3 | | 3 | 3 | 3 | 3 | |

## Derating curve

**Straight Connectors male + female M 23, 12-pole, wires 12 x AWG17**

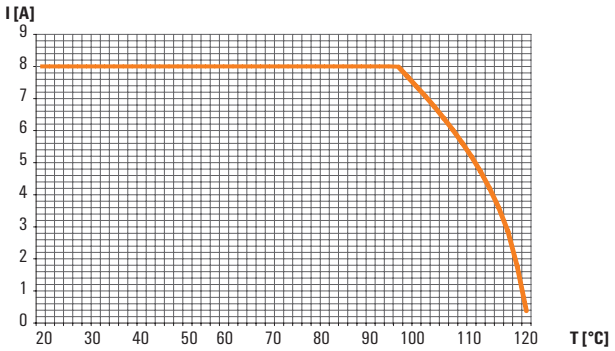

# Power connectors

## Technical data

| Mechanical data | | | | |
|---|---|---|---|---|
| Housing | | Copper-Zinc alloy<br>Die Casting | | |
| Housing surface | | Nickel plated brass<br>other surface upon request | | |
| Inserts (for contacts) | | Thermoplastic Polyamid PA 6 (Nylon 6/6), PBT / Fire protection class V-0 | | |
| Contacts | | Copper-Zinc alloy | | |
| Contact surface at point of contact | | Nickel and gold plated (0.25 µm Au) | | |
| Minimum mating cycles | | > 1000 | | |
| Seals / O-Rings | | Buna-N standard<br>optional Viton® (Viton is a registered trademark of DuPont) | | |
| Temperature range | | -40 °C – 125 °C | | |
| Type of contacts | | Crimp | | |
| Protection, Imperviousness | | IP 67 / IP 69 K per EN 60 529 (connected) | | |
| Cable diameter range | | 7 – 17 mm | | |
| **Electrical Data** | | | | |
| Number of positions | | 5 + PE | 4/4 | |
| Number of contacts | | 6 | 4 | 4 |
| Contact-Ø | mm | 2 | 1 | 2 |
| Nominal current | A | 28 | 8 | 28 |
| Nominal voltage at pollution degree 2 | V~ | 800 | 300 | 800 |
| Nominal voltage at pollution degree 3 | V~ | 600 | 300 | 600 |
| Test voltage | V~ | 4000 | 2500 | 4000 |
| Insulation resistance | MΩ | > $10^{13}$ | > $10^{13}$ | |
| Max. contact resistance | mΩ | 3 | 3 | |

## Derating curve

**Straight connectors male + female M 23, 5 + PE, wires 5 x AWG12**

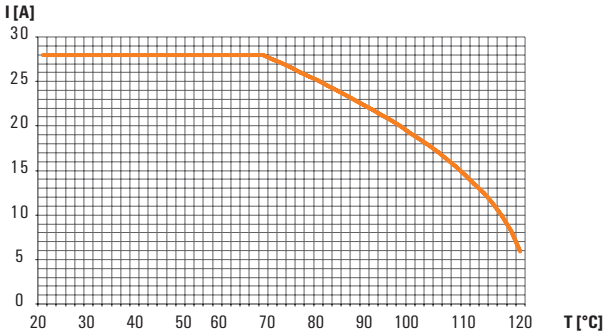

# M23 connector for signal transmission

All customisable connectors can also be assembled together with shielded cables.

| Housing | Contact inserts* | Contacts |
|---|---|---|
| Cable connector | 6-pole | Crimp pin<br>1 mm rotated<br>0.08 – 0.56 mm²  |
| Coupling connector | 7-pole | Crimp pin<br>1 mm rotated<br>0.14 – 1.00 mm²  |
| Angled connector | 9-pole | Crimp pin<br>1 mm rotated<br>1.00 – 1.50 mm²  |
| Angled connector (coupling) | 12-pole | Crimp socket<br>1 mm rotated<br>0.08 – 0.56 mm²  |
| Device connector (front panel) | 16-pole | Crimp socket<br>1 mm rotated<br>0.14 – 1.00 mm²  |
| Device connector with knurled nut | 17-pole | Crimp socket<br>1 mm rotated<br>1.00 – 1.50 mm²  |
| Device connector (single-hole mount) | 19-pole | Crimp pin<br>2 mm rotated<br>0.14 – 0.56 mm²  |
| Device connector (angled) | | Crimp socket<br>2 mm rotated<br>0.56 – 1.00 mm²  |
| Device connector (back panel) | | Crimp pin<br>2 mm rotated<br>0.75 – 2.50 mm² |
| | | Crimp socket<br>2 mm rotated<br>0.75 – 2.50 mm² |

* Solder and crimp inserts

# M23 connector for power transmission

| Housing | Contact inserts* | Contacts |
|---|---|---|
| Cable connector | 6 x Male 2 mm | Crimp pin<br>1 mm turned<br>0.25 – 1.00 mm² |
| Coupling connector | 6 x Socket 2 mm | Crimp socket<br>1 mm turned<br>0.25 – 1.00 mm² |
| Angled connector | 4 x Male 1 mm<br>4 x Male 2 mm | Crimp pin<br>2 mm turned<br>0.75 – 2.50 mm² |
| Angled connector<br>(coupling) | 4 x Socket 1 mm<br>4 x Socket 2 mm | Crimp pin<br>2 mm turned<br>2.50 – 4.00 mm² |
| Device connector<br>(front panel) | | Crimp socket<br>2 mm turned<br>0.75 – 2.50 mm² |
| Device connector<br>with knurled nut | | Crimp socket<br>2 mm turned<br>2.50 – 4.00 mm² |
| Device connector<br>(back panel) | | |
| Device connector<br>(back panel) | | |
| Device connector<br>(angled) | | |

* Crimp inserts

# Moulded M23 cables

| Housing |
|---|
| Cable connector |
| Coupling connector |
| Angled connector |
| Angled connector (coupling) |

## Housing

For cables with outer diameter of: 7–12 mm

### Cable connector

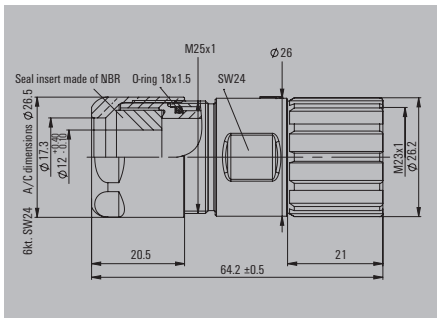


### Ordering data

| Type | Qty. | Order No. |
|---|---|---|
| SAI-M23-GS-7/12 | 1 | 1995840000 |
| SAI-M23-GS-11/17 | 1 | 1299390000 |

### Coupling connector

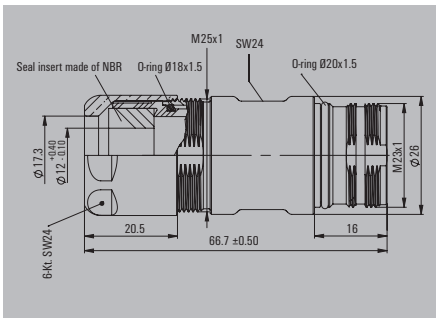


### Ordering data

| Type | Qty. | Order No. |
|---|---|---|
| SAI-M23-KS-7/12 | 1 | 1169900000 |

J

### Angled connector

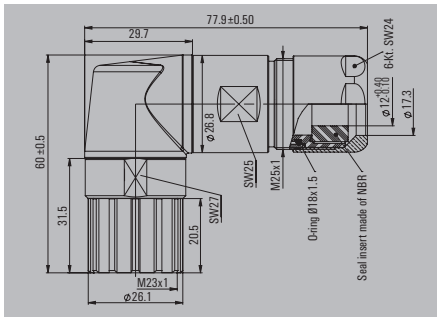


### Ordering data

| Type | Qty. | Order No. |
|---|---|---|
| SAIL-M23-GS-S-7/12 | 1 | 1169920000 |

### Angled connector (coupling)

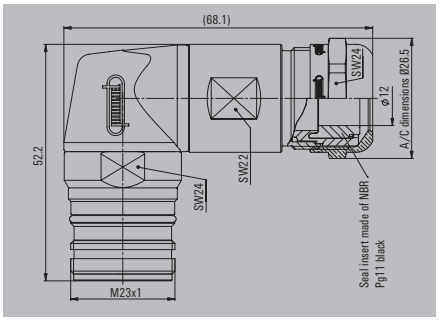


### Ordering data

| Type | Qty. | Order No. |
|---|---|---|
| SAIL-M23-KSW-7/12 | 1 | 1169930000 |

## Built-in connector

With 3.2-mm mounting holes

### Device connector (front panel)

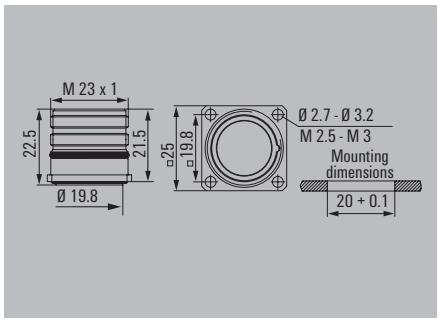


**Ordering data**

| Type | Qty. | Order No. |
|---|---|---|
| SAIE-M23-S-VW | 1 | 1169940000 |

### Device connector with knurled nut

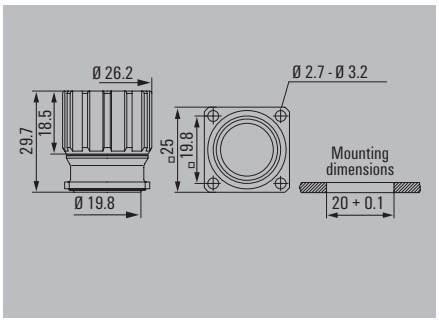


**Ordering data**

| Type | Qty. | Order No. |
|---|---|---|
| SAIE-M23-S-RM | 1 | 1169950000 |

### Device connector (single-hole mount)

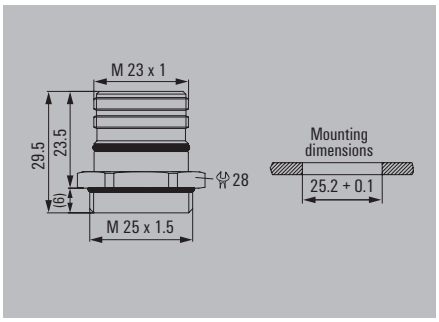


**Ordering data**

| Type | Qty. | Order No. |
|---|---|---|
| SAIE-M23-S-EM | 1 | 1169970000 |

### Device connector (angled)

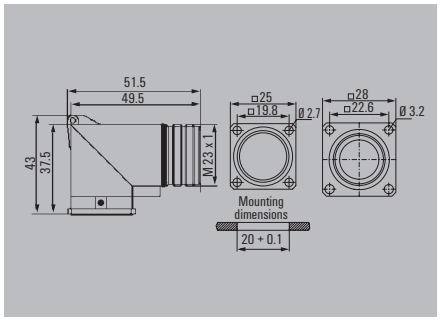


**Ordering data**

| Type | Qty. | Order No. |
|---|---|---|
| SAIE-M23-S-W | 1 | 1169980000 |

### Device connector (back panel)

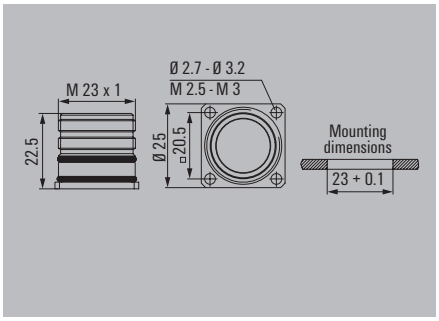


**Ordering data**

| Type | Qty. | Order No. |
|---|---|---|
| SAIE-M23-S-HW | 1 | 1169990000 |

## Inserts

### 6-pole

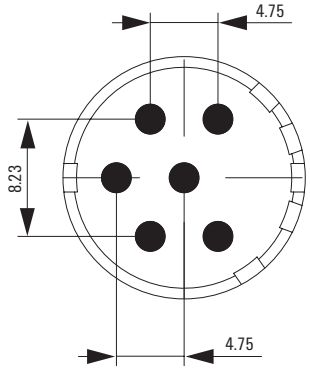


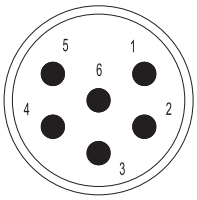


Male insert on plug side

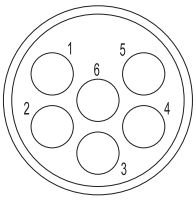


Female insert on plug side

#### Ordering data

| | Type | Qty. | Order No. |
|---|---|---|---|
| Insert 6-pole male | SAI-M23-SE-6 | 1 | 1170000000 |
| Insert 6-pole socket | SAI-M23-BE-6 | 1 | 1170020000 |

### 9-pole

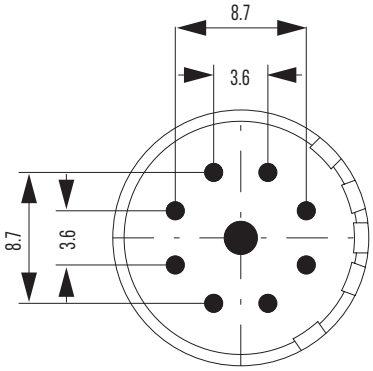


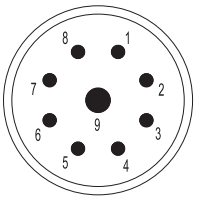


Male insert on plug side

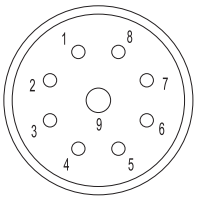


Female insert on plug side

#### Ordering data

| | Type | Qty. | Order No. |
|---|---|---|---|
| Insert 9-pole male | SAI-M23-SE-9 | 1 | 1170050000 |
| Insert 9-pole socket | SAI-M23-BE-9 | 1 | 1170060000 |

### 7-pole

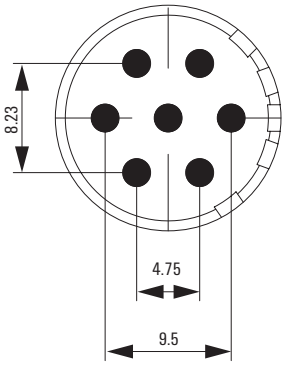


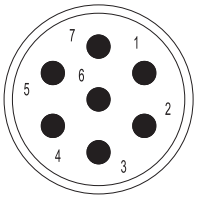


Male insert on plug side

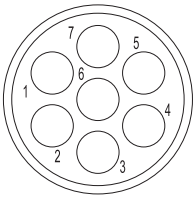


Female insert on plug side

#### Ordering data

| | Type | Qty. | Order No. |
|---|---|---|---|
| Insert 7-pole male | SAI-M23-SE-7 | 1 | 1170030000 |
| Insert 7-pole socket | SAI-M23-BE-7 | 1 | 1170040000 |

### 12-pole

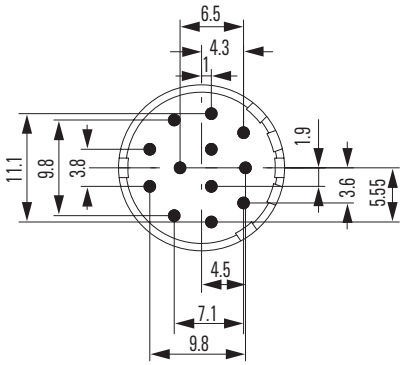


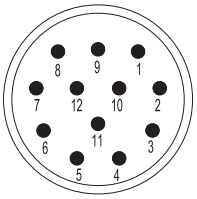


Male insert on plug side

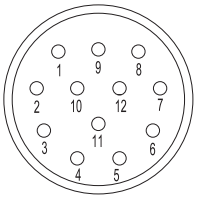


Female insert on plug side

#### Ordering data

| | Type | Qty. | Order No. |
|---|---|---|---|
| Insert 12-pole male | SAI-M23-SE-12 | 1 | 1170070000 |
| Insert 12-pole socket | SAI-M23-BE-12 | 1 | 1995850000 |
| Reverse flow socket | SAI-M23-BE-12-G | 1 | 1296730000 |

## 16-pole

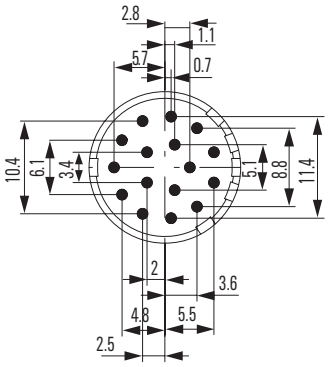


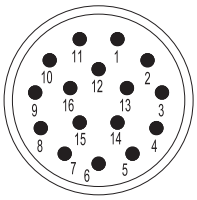

Male insert on plug side

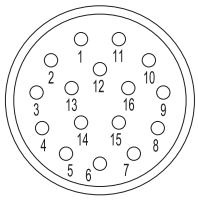

Female insert on plug side

### Ordering data

| | Type | Qty. | Order No. |
|---|---|---|---|
| Insert 16-pole male | SAI-M23-SE-16 | 1 | 1170080000 |
| Insert 16-pole socket | SAI-M23-BE-16 | 1 | 1170090000 |

## 19-pole

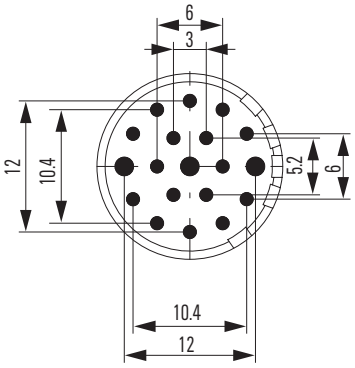


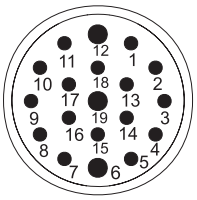

Male insert on plug side

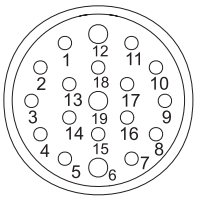

Female insert on plug side

### Ordering data

| | Type | Qty. | Order No. |
|---|---|---|---|
| Insert 19-pole male | SAI-M23-SE-19 | 1 | 1170120000 |
| Insert 19-pole socket | SAI-M23-BE-19 | 1 | 1170130000 |

## 17-pole

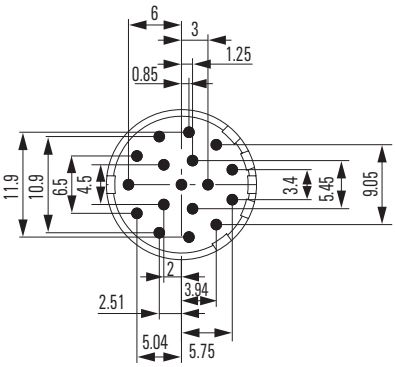


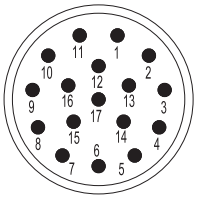

Male insert on plug side

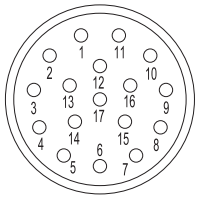

Female insert on plug side

### Ordering data

| | Type | Qty. | Order No. |
|---|---|---|---|
| Insert 17-pole male | SAI-M23-SE-17 | 1 | 1170100000 |
| Insert 17-pole socket | SAI-M23-BE-17 | 1 | 1170110000 |

## Contacts

### Male, 1 mm

**0.08-0.56**

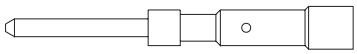

**0.14-1.00**

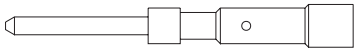

**1.00-1.50**

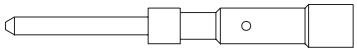

**Ordering data**

| | Type | Qty. | Order No. |
|---|---|---|---|
| 1.0 mm Male (0.08-0.56) | SAI-M23-KSC-0.08/0.56 | 50 | 1170140000 |
| 1.0 mm Male (0.14-1.00) | SAI-M23-KSC-0.14/1.00 | 50 | 1170150000 |
| 1.0 mm Male (1.00-1.50) | SAI-M23-KSC-1.00-1.5 | 50 | 1170170000 |

### Female, 1 mm

**0.08-0.56**

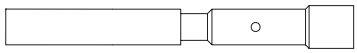

**0.34-1.00**

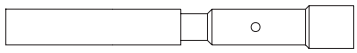

**1.00-1.50**

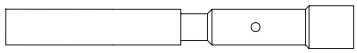

**Ordering data**

| | Type | Qty. | Order No. |
|---|---|---|---|
| 1.0 mm Socket (0.08-0.56) | SAI-M23-KBC-0.08/0.56 | 50 | 1995860000 |
| 1.0 mm Socket (0.34-1.00) | SAI-M23-KBC-0.34/1.00 | 50 | 1170180000 |
| 1.0 mm Male (1.00-1.50) | SAI-M23-KBC-1.00-1.5 | 50 | 1170210000 |

### Male, 1.5 mm

**0.14-1.00**

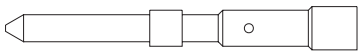

**Ordering data**

| | Type | Qty. | Order No. |
|---|---|---|---|
| 1.5 mm Male (0.14-1.00) | SAI-M23-KSC-1.5-0.14-1 | 50 | 1170220000 |

### Female, 1.5 mm

**0.14-0.56**

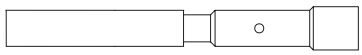

**0.56-1.00**

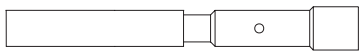

**Ordering data**

| | Type | Qty. | Order No. |
|---|---|---|---|
| 1.5 mm Socket (0.14-0.56) | SAI-M23-KBC-1.5-.14-.56 | 50 | 1170230000 |
| 1.5 mm Socket (0.56-1.00) | SAI-M23-KBC-1.5-.56-1.0 | 50 | 1170240000 |

## Male, 2 mm

**0.75-2.00**

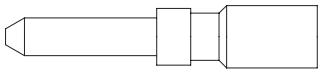

### Ordering data

| | Type | Qty. | Order No. |
|---|---|---|---|
| 2.0 mm Male (0.75-2.00) | SAI-M23-KSC-2-0.75-2.50 | 50 | **1170250000** |

## Female, 2 mm

**0.75-2.00**

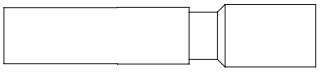

### Ordering data

| | Type | Qty. | Order No. |
|---|---|---|---|
| 2.0 mm Socket (0.75-2.00) | SAI-M23-KBC-2-0.75-2.50 | 50 | **1170260000** |

## Technical data

| | | | | | | | | | | |
|---|---|---|---|---|---|---|---|---|---|---|
| Number of positions | | 6 | 7 | 9 | | 12 | 16 | 17 | 19 | |
| Number of contacts | | 6 | 7 | 8 | 1 | 12 | 16 | 17 | 16 | 3 |
| Contact-Ø | mm | 2 | 2 | 1 | 2 | 1 | 1 | 1 | 1 | 1.5 |

**Note:** You can find tools in chapter K. All female connector contacts have SLS technology except for 1170230000 and 1170240000. Other information is available on page J. 44.

# M23 inserts with solder contacts

**The M23 solder versions are used for PCB mount soldering or to attach to wires.**

SAI M23 solder inserts with PCB solder pin and solder cups fit the existing M23 housings. This product line is an extension of the existing M23 modular signal connectors. Please also see our M23 Product Information "SAI M23 Connectors".
PCB mount solder contacts are available in different lengths to properly fit with the various housing styles offered by Weidmüller.
All contacts are gold plated for improved connectivity and increased mating cycles.

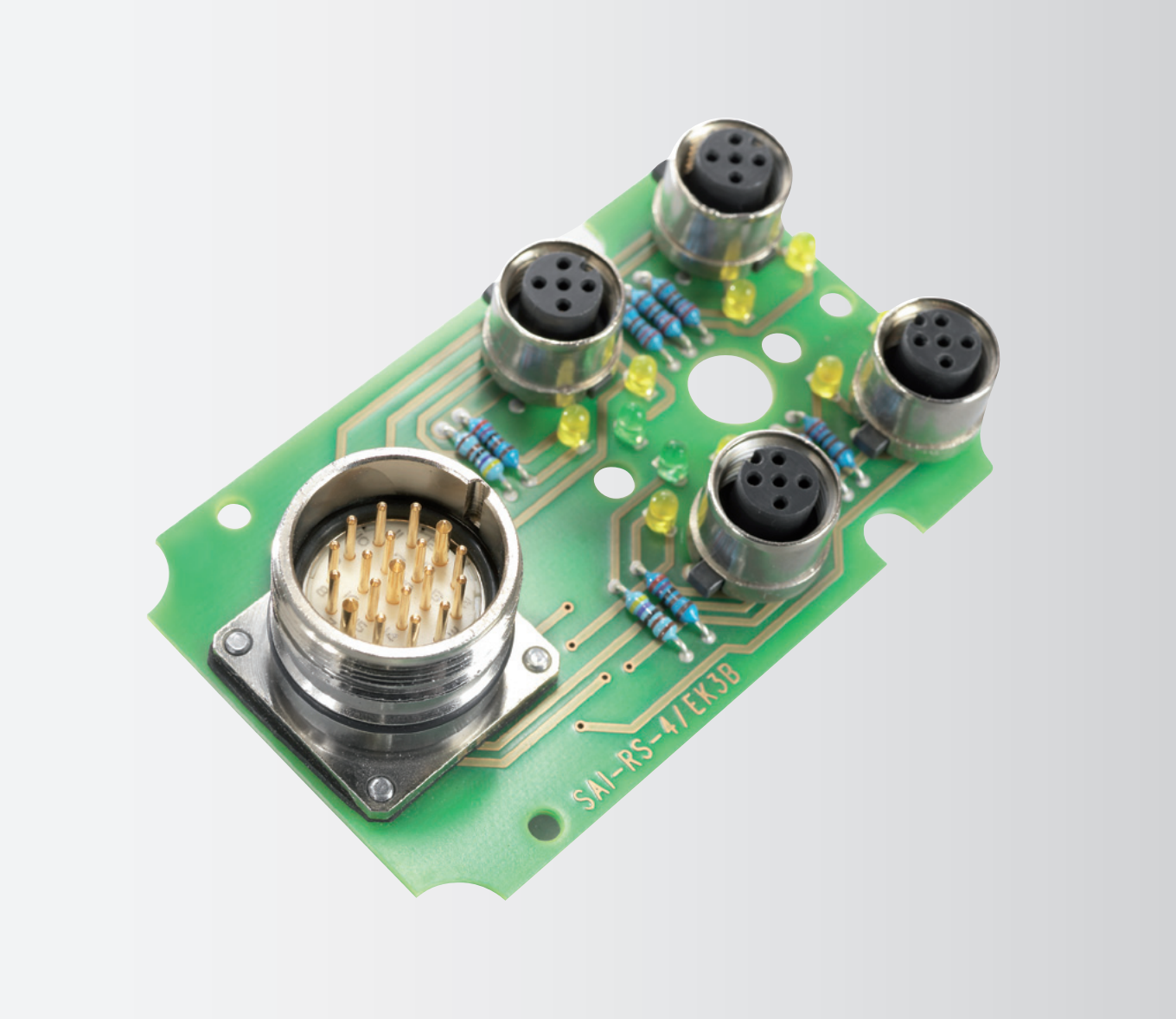

## Inserts with solder contacts

### 6-pole

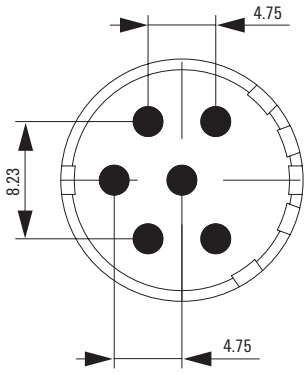


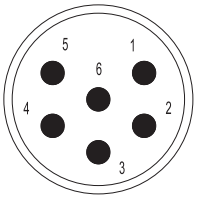


Male insert on plug side

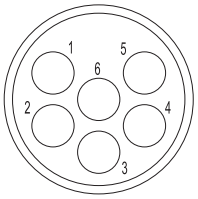


Female insert on plug side

### Technical data

| | |
|---|---|
| No. of poles | 6 |
| Contact number / diameter | 6 x 2 mm |

### Ordering data

| Pinout clockwise | Type | Qty. | Order No. |
|---|---|---|---|
| Solder pins, solder cup | SAI-M23-SE-6-F | 1 | 1224000000 |
| Solder sockets, solder cup | SAI-M23-BE-6-F | 1 | 1224010000 |
| PCB solder pins, 3.5 mm | SAI-M23-SE-6-3.5mm | 1 | 1224020000 |
| PCB solder sockets, 3.5 mm | SAI-M23-BE-6-3.5mm | 1 | 1224030000 |
| PCB solder pins, 10 mm | SAI-M23-SE-6-10mm | 1 | 1224050000 |
| PCB solder pins, 17 mm | SAI-M23-SE-6-17mm | 1 | 1224060000 |
| PCB solder sockets, 17 mm | SAI-M23-BE-6-17mm | 1 | 1224040000 |

PCB hole-Ø: 1.5 mm

### 7-pole

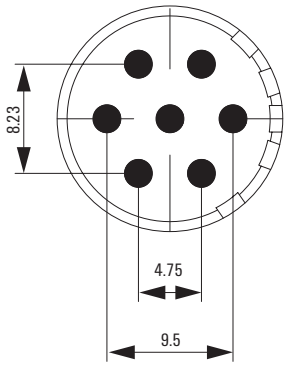


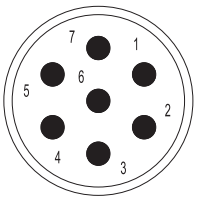


Male insert on plug side

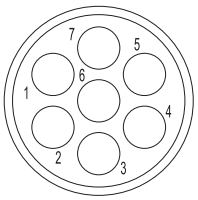


Female insert on plug side

### Technical data

| | |
|---|---|
| No. of poles | 7 |
| Contact number / diameter | 7 x 2 mm |

### Ordering data

| Pinout clockwise | Type | Qty. | Order No. |
|---|---|---|---|
| Solder pins, solder cup | SAI-M23-SE-7-F | 1 | 1224070000 |
| Solder sockets, solder cup | SAI-M23-BE-7-F | 1 | 1224080000 |
| PCB solder pins, 3.5 mm | SAI-M23-SE-7-3.5mm | 1 | 1224090000 |
| PCB solder sockets, 3.5 mm | SAI-M23-BE-7-3.5mm | 1 | 1224100000 |
| PCB solder pins, 10 mm | SAI-M23-SE-7-10mm | 1 | 1224120000 |
| PCB solder pins, 17 mm | SAI-M23-SE-7-17mm | 1 | 1224130000 |
| PCB solder sockets, 17 mm | SAI-M23-BE-7-17mm | 1 | 1224110000 |

PCB hole-Ø: 0.8 mm (1.2 mm at 17 mm socket)

## Inserts with solder contacts

### 9-pole

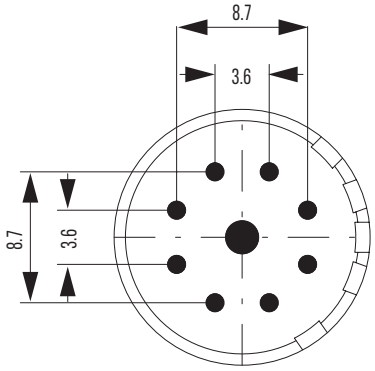


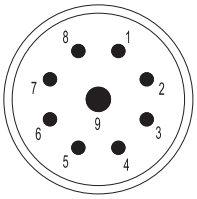


Male insert on plug side

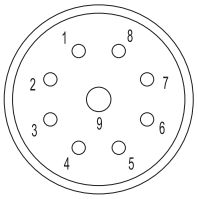


Female insert on plug side

### Technical data

| | |
|---|---|
| No. of poles | 9 |
| Contact number / diameter | 8 x 1 mm + 1 x 2 mm |

### Ordering data

| Pinout clockwise | Type | Qty. | Order No. |
|---|---|---|---|
| Solder pins, solder cup | SAI-M23-SE-9-F | 1 | 1224490000 |
| Solder sockets, solder cup | SAI-M23-BE-9-F | 1 | 1224500000 |
| PCB solder pins, 3.5 mm | SAI-M23-SE-9-3.5mm | 1 | 1224510000 |
| PCB solder pins, 10 mm | SAI-M23-SE-9-10mm | 1 | 1224540000 |
| PCB solder sockets, 10 mm | SAI-M23-BE-9-10mm | 1 | 1224520000 |
| PCB solder pins, 17 mm | SAI-M23-SE-9-17mm | 1 | 1224550000 |
| PCB solder sockets, 17 mm | SAI-M23-BE-9-17mm | 1 | 1224530000 |
| **Pinout counter clockwise** | | | |
| Solder pins, solder cup | SAI-M23-SE-9-F-G | 1 | 1224730000 |
| Solder sockets, solder cup | SAI-M23-BE-9-F-G | 1 | 1224740000 |
| PCB solder pins, 10 mm | SAI-M23-SE-9-10mm-G | 1 | 1224770000 |
| PCB solder sockets, 10 mm | SAI-M23-BE-9-10mm-G | 1 | 1224750000 |
| PCB solder pins, 17 mm | SAI-M23-SE-9-17mm-G | 1 | 1224780000 |
| PCB solder sockets, 17 mm | SAI-M23-BE-9-17mm-G | 1 | 1224760000 |

PCB hole-Ø: 1 mm contact = 0.8 mm (1.2 mm at 17 mm socket)
2 mm contact = 1.5 mm

### 12-pole

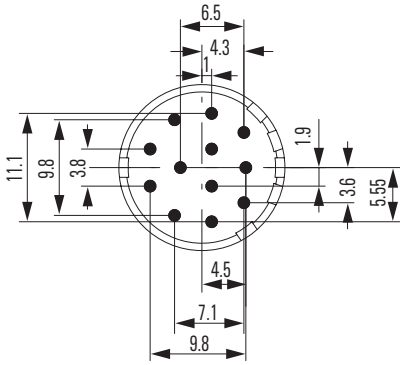


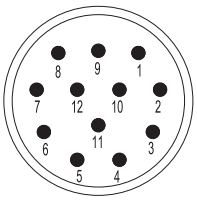


Male insert on plug side

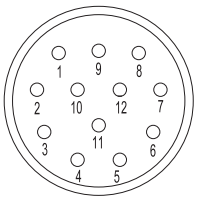


Female insert on plug side

### Technical data

| | |
|---|---|
| No. of poles | 12 |
| Contact number / diameter | 12 x 1 mm |

### Ordering data

| Pinout clockwise | Type | Qty. | Order No. |
|---|---|---|---|
| Solder pins, solder cup | SAI-M23-SE-12-F | 1 | 1224140000 |
| Solder sockets, solder cup | SAI-M23-BE-12-F | 1 | 1224150000 |
| PCB solder pins, 3.5 mm | SAI-M23-SE-12-3.5mm | 1 | 1224160000 |
| PCB solder pins, 3.5 mm, with PE contact pin 9 | SAI-M23-SE-12-3.5mm-PE | 1 | 1224180000 |
| PCB solder sockets, 3.5 mm, with PE contact pin 9 | SAI-M23-BE-12-3.5mm-PE | 1 | 1224190000 |
| PCB solder pins, 10 mm | SAI-M23-SE-12-10mm | 1 | 1224220000 |
| PCB solder sockets, 10 mm | SAI-M23-BE-12-10mm | 1 | 1224170000 |
| PCB solder pins, 17 mm | SAI-M23-SE-12-17mm | 1 | 1224230000 |
| PCB solder sockets, 17 mm | SAI-M23-BE-12-17mm | 1 | 1224210000 |
| **Pinout counter clockwise** | | | |
| Solder pins, solder cup | SAI-M23-SE-12-F-G | 1 | 1224560000 |
| Solder sockets, solder cup | SAI-M23-BE-12-F-G | 1 | 1224570000 |
| PCB solder pins, 3.5 mm | SAI-M23-SE-12-3.5mm-G | 1 | 1224580000 |
| PCB solder pins, 10 mm | SAI-M23-SE-12-12mm-G | 1 | 1224630000 |
| PCB solder sockets, 10 mm | SAI-M23-BE-12-10mm-G | 1 | 1224590000 |
| PCB solder pins, 10 mm, with PE contact pin 9 | SAI-M23-SE-12-10mm-PE-G | 1 | 1224620000 |
| PCB solder sockets, 10 mm, with PE contact pin 9 | SAI-M23-BE-12-10mm-PE-G | 1 | 1224610000 |
| PCB solder pins, 17 mm | SAI-M23-SE-12-17mm-G | 1 | 1224640000 |

PCB hole-Ø: 0.8 mm (1.2 mm at 17 mm socket)

## Inserts with solder contacts

### 16-pole

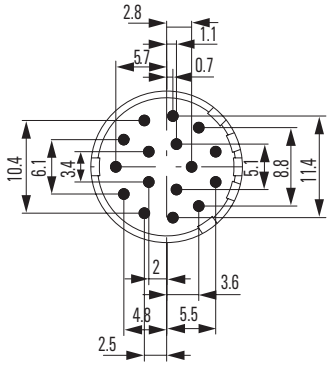


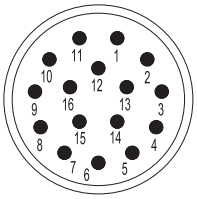

Male insert on plug side

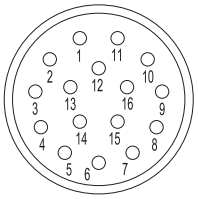

Female insert on plug side

### Technical data

| | |
|---|---|
| No. of poles | 16 |
| Contact number / diameter | 6 x 1 mm |

### Ordering data

| Pinout clockwise | Type | Qty. | Order No. |
|---|---|---|---|
| Solder pins, solder cup | SAI-M23-SE-16-F | 1 | 1224240000 |
| Solder sockets, solder cup | SAI-M23-BE-16-F | 1 | 1224250000 |
| PCB solder pins, 3.5 mm | SAI-M23-SE-16-3.5mm | 1 | 1224260000 |
| PCB solder sockets, 3.5 mm | SAI-M23-BE-16-3.5mm | 1 | 1224270000 |
| PCB solder pins, 10 mm | SAI-M23-SE-16-10mm | 1 | 1224290000 |
| PCB solder pins, 17 mm | SAI-M23-SE-16-17mm | 1 | 1224310000 |
| PCB solder sockets, 17 mm | SAI-M23-BE-16-17mm | 1 | 1224280000 |

PCB hole-Ø: 0.8 mm (1.2 mm at 17 mm socket)

### 17-pole

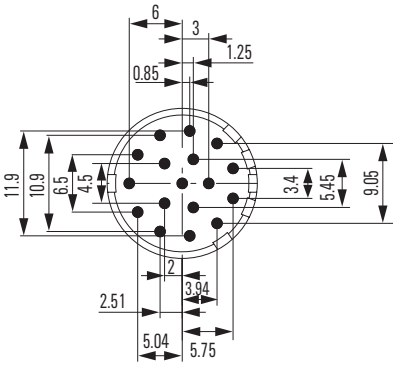


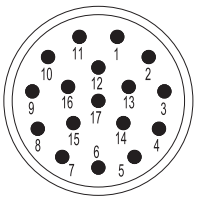

Male insert on plug side

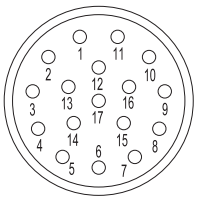

Female insert on plug side

### Technical data

| | |
|---|---|
| No. of poles | 17 |
| Contact number / diameter | 17 x 1 mm |

### Ordering data

| Pinout clockwise | Type | Qty. | Order No. |
|---|---|---|---|
| Solder pins, solder cup | SAI-M23-SE-17-F | 1 | 1224320000 |
| Solder sockets, solder cup | SAI-M23-BE-17-F | 1 | 1224330000 |
| PCB solder pins, 3.5 mm | SAI-M23-SE-17-3.5mm | 1 | 1224340000 |
| PCB solder pins, 10 mm | SAI-M23-SE-17-10mm | 1 | 1224370000 |
| PCB solder sockets, 10 mm | SAI-M23-BE-17-10mm | 1 | 1224350000 |
| PCB solder pins, 17 mm | SAI-M23-SE-17-17mm | 1 | 1224380000 |
| PCB solder sockets, 17 mm | SAI-M23-BE-17-17mm | 1 | 1224360000 |
| **Pinout counter clockwise** | | | |
| Solder pins, solder cup | SAI-M23-SE-17-F-G | 1 | 1224650000 |
| Solder sockets, solder cup | SAI-M23-BE-17-F-G | 1 | 1224660000 |
| PCB solder pins, 3.5 mm | SAI-M23-SE-17-3.5mm-G | 1 | 1224670000 |
| PCB solder pins, 10 mm | SAI-M23-SE-17-10mm-G | 1 | 1224710000 |
| PCB solder socket, 10 mm | SAI-M23-BE-17-10mm-G | 1 | 1224680000 |
| PCB solder pins, 17 mm | SAI-M23-SE-17-17mm-G | 1 | 1224720000 |
| PCB solder sockets, 17 mm | SAI-M23-BE-17-17mm-G | 1 | 1224690000 |

PCB hole-Ø: 0.8 mm (1.2 mm at 17 mm socket)

## Inserts with solder contacts

### 19-pole

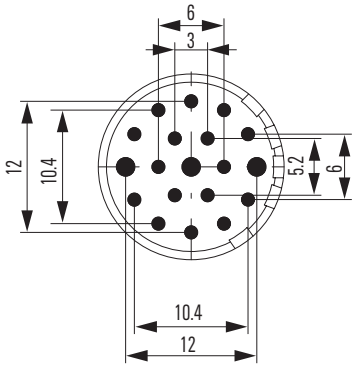


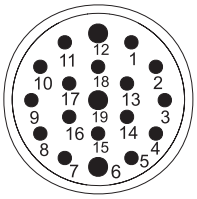


Male insert on plug side

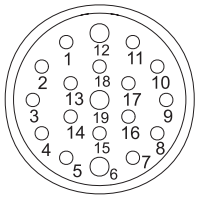


Female insert on plug side

### Technical data

| | |
|---|---|
| No. of poles | 19 |
| Contact number / diameter | 16 x 1 mm + 3 x 1.5 mm |

### Ordering data

| Pinout clockwise | Type | Qty. | Order No. |
|---|---|---|---|
| Solder pins, solder cup | SAI-M23-SE-19-F | 1 | **1224390000** |
| Solder sockets, solder cup | SAI-M23-BE-19-F | 1 | **1224400000** |
| PCB solder pins, 3.5 mm | SAI-M23-SE-19-3.5mm | 1 | **1224410000** |
| PCB solder pins, 3.5 mm, with PE contact pin 12 | SAI-M23-SE-19-3.5mmPE12 | 1 | **1224460000** |
| PCB solder sockets, 3.5 mm, with PE contact pin 12 | SAI-M23-BE-19-3.5mm-PE | 1 | **1224440000** |
| PCB solder pins, 10 mm | SAI-M23-SE-19-10mm | 1 | **1224470000** |
| PCB solder sockets, 10 mm | SAI-M23-BE-19-10mm | 1 | **1224420000** |
| PCB solder pins, 10 mm, with PE contact pin 12 | SAI-M23-SE-19-10mm-PE | 1 | **1224430000** |
| PCB solder pins, 17 mm | SAI-M23-SE-19-17mm | 1 | **1224480000** |
| PCB solder sockets, 17 mm | SAI-M23-BE-19-17mm | 1 | **1224450000** |

PCB hole-Ø: 1 mm contact = 0.8 mm (1.2 mm at 17 mm socket)
1.5 mm contact = 1.5 mm

## M23 connector for signal transmission

### Overview of inserts and housings

This table shows the different combination possibilities of the inserts and solder pins, with housings.

### Solder pin affiliation

| Type | Order No. | Solder pin length | | |
|---|---|---|---|---|
| | | 3.5 mm | 10 mm | 17 mm |
| SAIE-M23-S-VW | 1169940000 | | X | X |
| SAIE-M23-S-RM | 1169950000 | | | X |
| SAIE-M23-S-EM | 1169970000 | | | X |
| SAIE-M23-S-HW | 1169990000 | X | X | X |

### Device connector (front panel)

**Male insert**

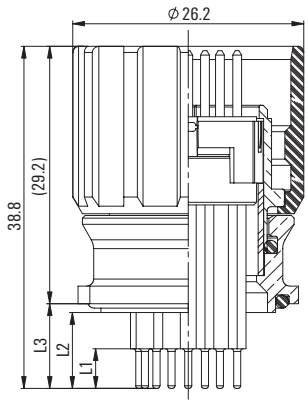


| Male insert | L1 | L2 | L3 |
|---|---|---|---|
| 10 mm | 4.5 | 10.3 | 11.65 |
| 17 mm | 4.5 | 17.3 | 18.65 |

**Female insert**

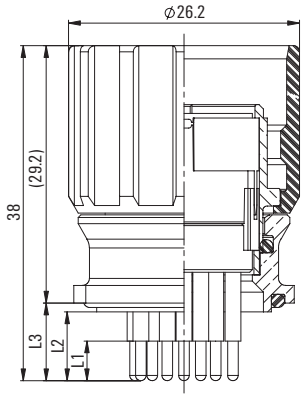


| Female insert | L1 | L2 | L3 |
|---|---|---|---|
| 10 mm | 4.5 | 5.3 | 11.1 |
| 17 mm | 4.5 | 12.3 | 18.1 |

### Ordering data

| Type | Qty. | Order No. |
|---|---|---|
| SAIE-M23-S-VW | 1 | 1169940000 |

### Device connector with knurled nut

**Male insert**

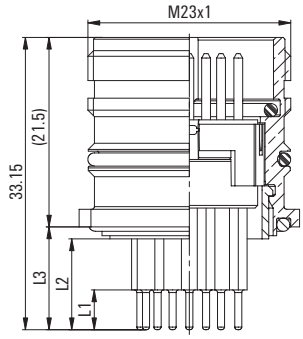


| Male insert | L1 | L2 | L3 |
|---|---|---|---|
| 10 mm | - | - | - |
| 17 mm | 4.5 | 8.6 | 9.6 |

**Female insert**

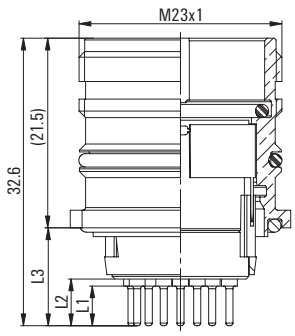


| Female insert | L1 | L2 | L3 |
|---|---|---|---|
| 10 mm | - | - | - |
| 17 mm | 4.5 | 7.8 | 8.8 |

### Ordering data

| Type | Qty. | Order No. |
|---|---|---|
| SAIE-M23-S-RM | 1 | 1169950000 |

## Device connector (single-hole mount)

**Male insert**

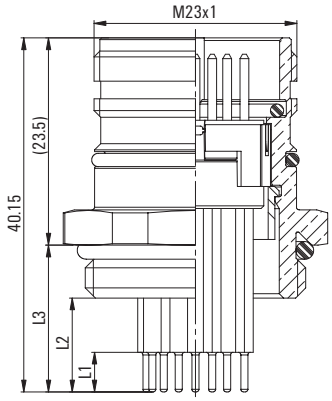


| Male insert | L1 | L2 | L3 |
|---|---|---|---|
| 10 mm | - | - | - |
| 17 mm | 4.5 | 10.65 | 16.65 |

**Female insert**

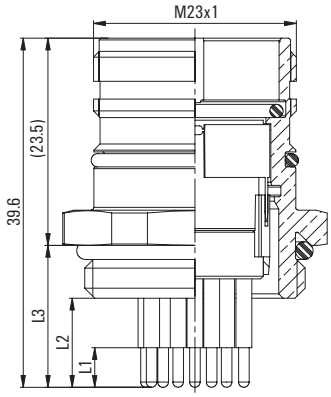


| Female insert | L1 | L2 | L3 |
|---|---|---|---|
| 10 mm | - | - | - |
| 17 mm | 4.5 | 10.1 | 16.1 |

### Ordering data

| Type | Qty. | Order No. |
|---|---|---|
| SAIE-M23-S-EM | 1 | 1169970000 |

## Device connector (back panel)

**Male insert**

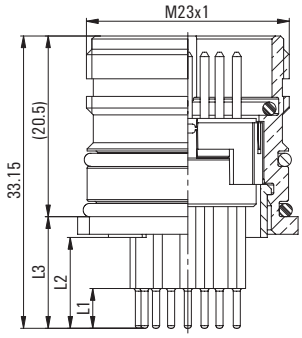


| Male insert | L1 | L2 | L3 |
|---|---|---|---|
| 10 mm | 4.5 | 10.3 | 12.65 |
| 17 mm | 4.5 | 17.3 | 19.65 |

**Female insert**

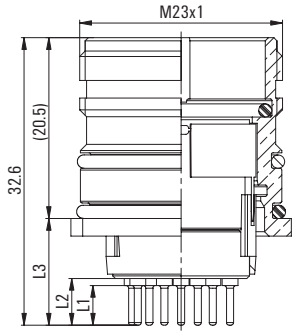


| Female insert | L1 | L2 | L3 |
|---|---|---|---|
| 10 mm | 4.5 | 5.3 | 12.1 |
| 17 mm | 4.5 | 12.3 | 19.1 |

### Ordering data

| Type | Qty. | Order No. |
|---|---|---|
| SAIE-M23-S-HW | 1 | 1169990000 |

## Device connector with knurled nut

**Male insert**

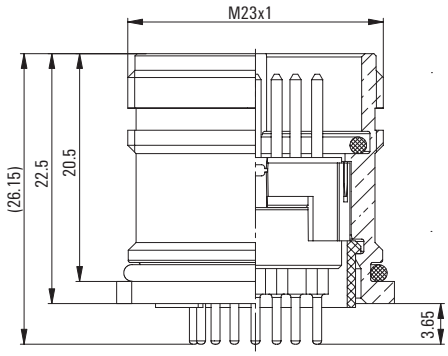


This solder pin length connector has a solder pin insert with 3.5 mm solder pin length.
3.5 mm solder inserts can only be combined with this plug-in connector and only in the male version.

### Ordering data

| Type | Qty. | Order No. |
|---|---|---|
| SAIE-M23-S-RM | 1 | 1169990000 |

## Housing

For cables with outer diameter of: 7–12 mm

### Cable connector

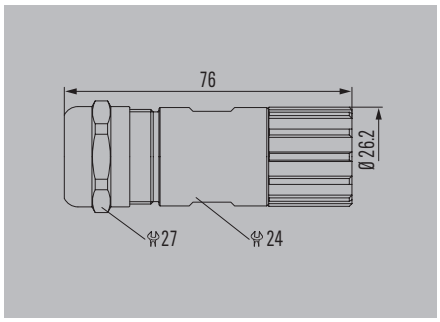


### Ordering data

| Type | Qty. | Order No. |
|---|---|---|
| SAI-M23-GS-L-7/12 | 1 | 1995800000 |

### Coupling connector

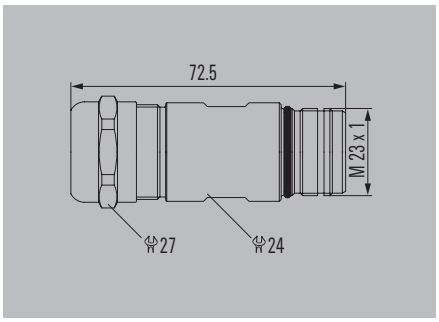


### Ordering data

| Type | Qty. | Order No. |
|---|---|---|
| SAI-M23-KS-L-7/12 | 1 | 1170270000 |

J

### Angled connector

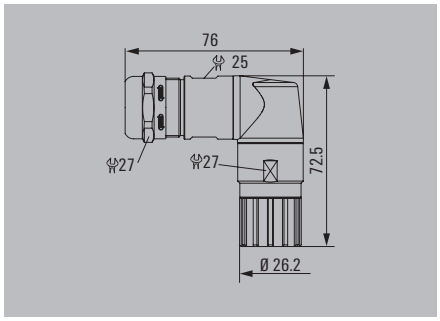


### Ordering data

| Type | Qty. | Order No. |
|---|---|---|
| SAIL-M23-GSW-L-7/12 | 1 | 1170280000 |

### Angled connector (coupling)

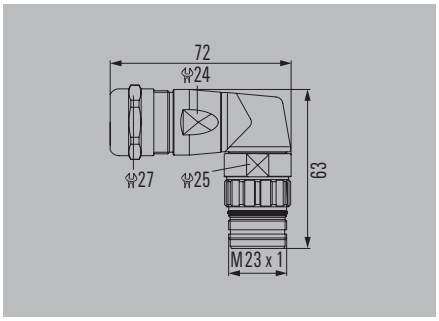


### Ordering data

| Type | Qty. | Order No. |
|---|---|---|
| SAIL-M23-KSW-L-7/12 | 1 | 1170290000 |

## Built-in connector

With 3.2-mm mounting holes

### Device connector (front panel)

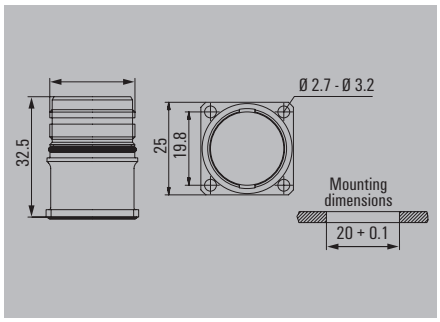


**Ordering data**

| Type | Qty. | Order No. |
|---|---|---|
| SAIE-M23-L-VW | 1 | 1170300000 |

### Device connector with knurled nut

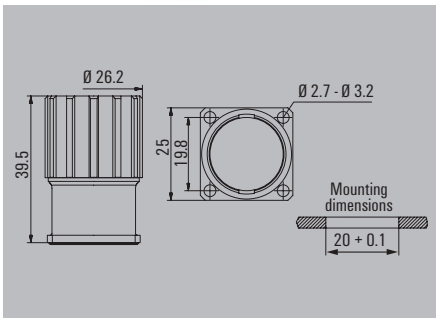


**Ordering data**

| Type | Qty. | Order No. |
|---|---|---|
| SAIE-M23-L-RM | 1 | 1170310000 |

### Device connector (single-hole mount)

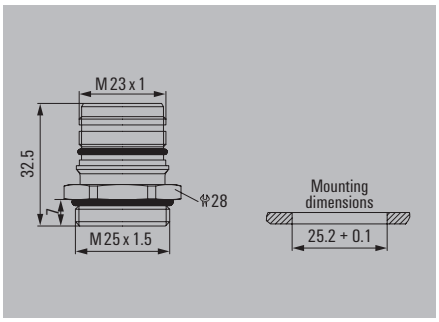


**Ordering data**

| Type | Qty. | Order No. |
|---|---|---|
| SAIE-M23-L-EM | 1 | 1170320000 |

### Device connector (angled)

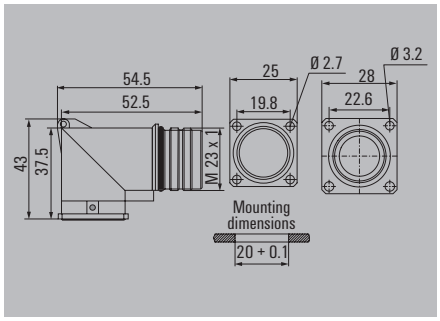


**Ordering data**

| Type | Qty. | Order No. |
|---|---|---|
| SAIE-M23-L-W | 1 | 1170330000 |

### Device connector (back panel)

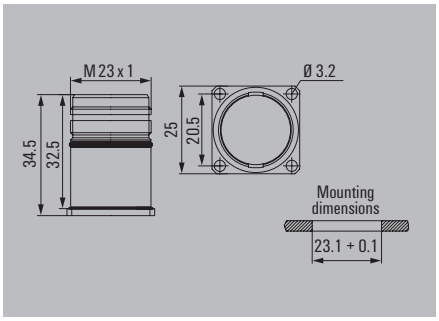


**Ordering data**

| Type | Qty. | Order No. |
|---|---|---|
| SAIE-M23-L-HW | 1 | 1170340000 |

## M23 connector for power transmission

### Inserts

#### 5 + PE

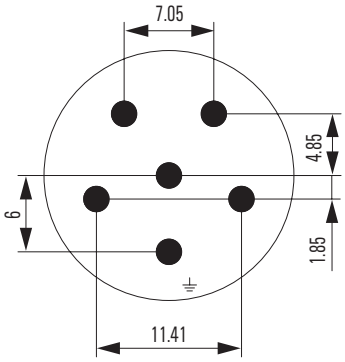


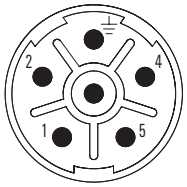


6 times male, 2 mm

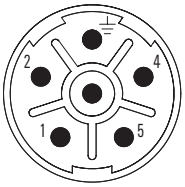


6 times female, 2 mm

#### Ordering data

| | Type | Qty. | Order No. |
|---|---|---|---|
| 6 times male 2 mm | SAI-M23-SE-L-6 | 1 | **1170350000** |
| 6 times female, 2 mm | SAI-M23-BE-L-6 | 1 | **1170370000** |

#### 4/4

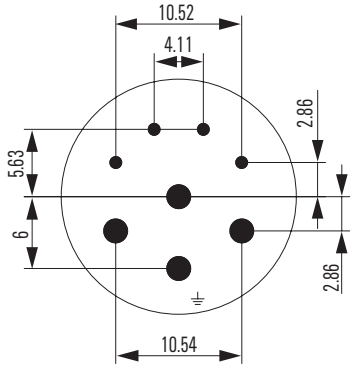


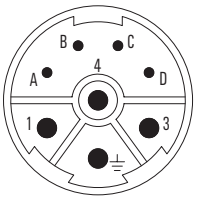


4 times 1-mm male and 4 times 2-mm male

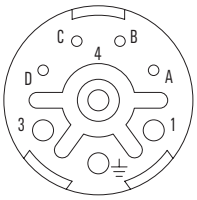


4 times 1-mm female and 4 times 2-mm female

#### Ordering data

| | Type | Qty. | Order No. |
|---|---|---|---|
| 4 times 1-mm male and 4 times 2-mm male | SAI-M23-SE-L-4/4 | 1 | **1170380000** |
| 4 times 1-mm female and 4 times 2-mm female | SAI-M23-BE-L-4/4 | 1 | **1995810000** |

## Contacts

### Male, 1 mm

**0.25 - 1.00**

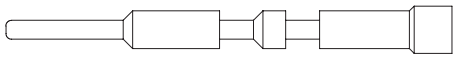

**Ordering data**

| | Type | Qty. | Order No. |
|---|---|---|---|
| 1 mm Male (0.25-1.00) | SAI-M23-KSC-0.25-1.0 | 50 | 1170390000 |

### Female, 1 mm

**0.25 – 1.00**

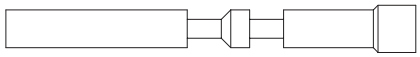

**Ordering data**

| | Type | Qty. | Order No. |
|---|---|---|---|
| 1 mm Socket (0.25-1.00) | SAI-M23-KBC-0.25-1.0 | 50 | 1995830000 |

### Male, 2 mm

**0.75 – 2.5**

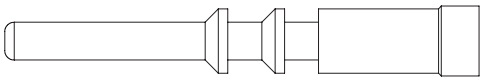

**2.5 – 4.00**

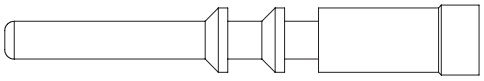

**Ordering data**

| | Type | Qty. | Order No. |
|---|---|---|---|
| 2 mm Male (0.75-2.5) | SAI-M23-KSC-L-0.75-2.5 | 50 | 1170400000 |
| 2 mm Male (2.5-4.00) | SAI-M23-KSC-L-2.5-4.0 | 50 | 1170410000 |

### Female, 2 mm

**0.75 – 2.5**

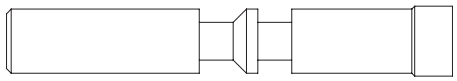

**2.5 – 4.00**

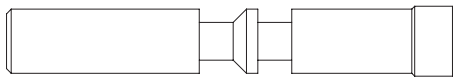

**Ordering data**

| | Type | Qty. | Order No. |
|---|---|---|---|
| 2 mm Socket (0.75-2.5) | SAI-M23-KBC-L-0.75-2.5 | 50 | 1995820000 |
| 2 mm Socket (2.5-4.00) | SAI-M23-KBC-L-2.5-4.0 | 50 | 1170420000 |

### Technical data

| | | | | |
|---|---|---|---|---|
| No. of poles | | 5 + PE | 4/4 | |
| Number of contacts | | 6 | 4 | 4 |
| Contact-Ø | mm | 2 | 1 | 2 |

**Note:** You can find tools in chapter K. All female connector contacts have SLS technology except for 1170230000 and 1170240000. Other information is available on page J. 44.

## M23 cables

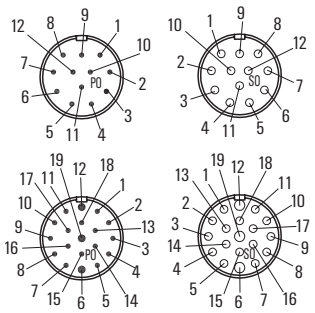


Male Female

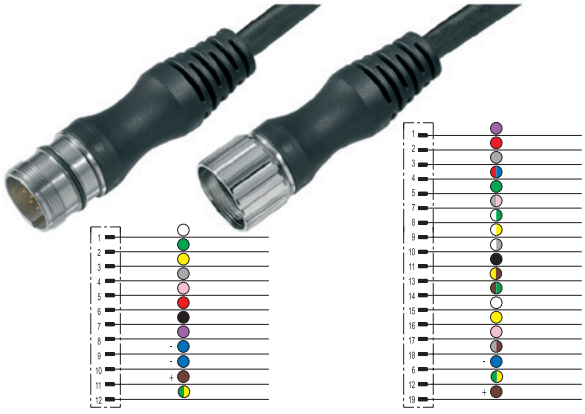

### Ordering data

| Male, straight | Male 12-pole Type | Order No. | Male 19-pole Type | Order No. |
|---|---|---|---|---|
| 1 m | SAIS-M23-12P-ST-1,0M | 1906280100 | SAIS-M23-19P-ST-1,0M | 1818160100 |
| **Male, angled** | | | | |
| 1 m | SAIS-M23-12P-AN-1,0M | 1906290100 | SAIS-M23-19P-AN-1,0M | 1818090100 |
| **Female, straight** | | | | |
| 1 m | SAIB-M23-12P-ST-1,0M | 1886440100 | SAIB-M23-19P-ST-1,0M | 1818180100 |
| **Female, angled** | | | | |
| 1 m | SAIB-M23-12P-AN-1,0M | 1877440100 | SAIB-M23-19P-AN-1,0M | 1818140100 |
| **Note** | ST = straight<br>AN = 90° elbow | | Other versions on request | |

### Standard cable lengths

| | | |
|---|---|---|
| All cables listed under the ordering data have a length of 1.5 metres. The last four ordering digits must be changed when ordering other standard cable lengths. | 1.5 m | xxxxxx0150 |
| | 3.0 m | xxxxxx0300 |
| | 5.0 m | xxxxxx0500 |
| | 10.0 m | xxxxxx1000 |

### Technical data

| | |
|---|---|
| Rated current | 8 A |
| Protection degree | IP 67 |
| Core cross-section | mm² |
| Contact surface | Gold-plated |
| Temperature range of housing | -25...+85 °C |
| Rated voltage<br>(acc. to VDE standard 0110 ISO group C) | 150 V |

Chapter W includes additional technical specifications for the cable

### Dimensioned drawing

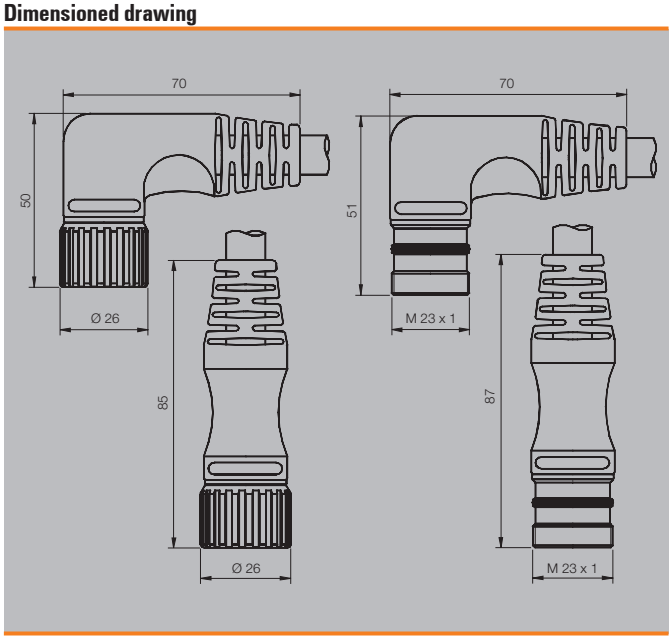

## With M23 outlet

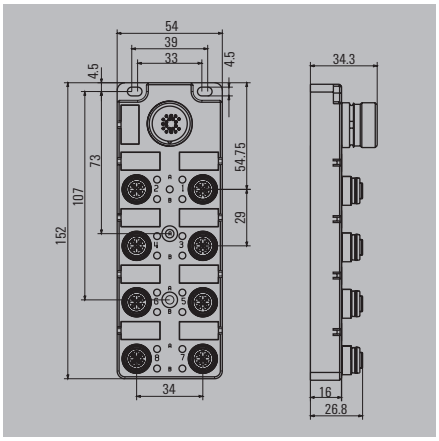


## Ordering data

| Complete modules | | | |
|---|---|---|---|
| | 4 channel | | |
| | 8 channel | | |
| **Note** | | | |

| SAI-4/8-S | | 4-pole |
|---|---|---|
| **Type** | **QTY** | **Order No.** |
| SAI-4-S 4P FC | 1 | **1847960000** |
| SAI-8-S 4P FC | 1 | **1847920000** |
| Other versions on request | | |

| SAI-4/8-S | | 5-pole |
|---|---|---|
| **Type** | **QTY** | **Order No.** |
| SAI-4-S 5P FC | 1 | **1847970000** |
| SAI-8-S 5P FC | 1 | **1848040000** |
| Other versions on request | | |

## Technical data

| | |
|---|---|
| Operating voltage | 10...30 V |
| Current of continuous busbars | 2 A |
| max. current-carrying capacity per slot | 4 A |
| Total current | 9 A |
| Pollution severity | 3 |
| Protection degree | IP 67 |
| Ambient temperature range | -25...+80 °C |
| Housing main material | PA 6 GF |
| Contact carrier material | PBT (UL 94 V0) |
| Base material of contacts | CuZn, pre-nickeled, gold-plated |
| screw socket | CuZn, nickel-plated |
| Housing colour | grey, RAL 7032 |
| Flammability class UL 94 | V-0 |
| Clamping range of hood-version | |
| Suitable for dragline cable (fixed cable connection) | |

## Wiring diagram

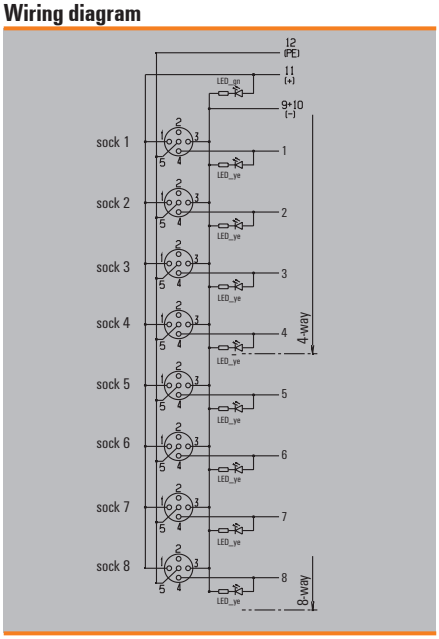


## Wiring diagram

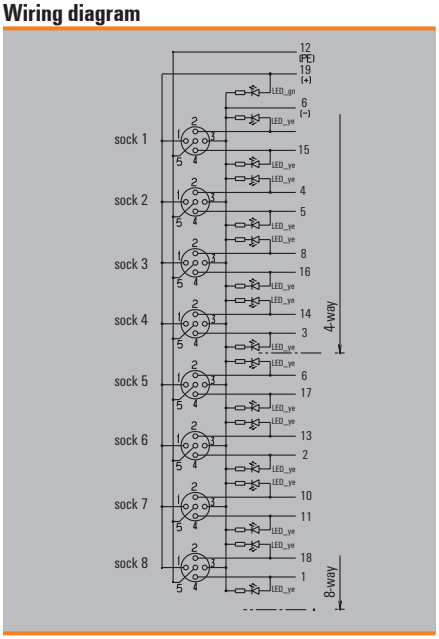

## SAI distributor M12 with M23

### With M23 outlet on face end

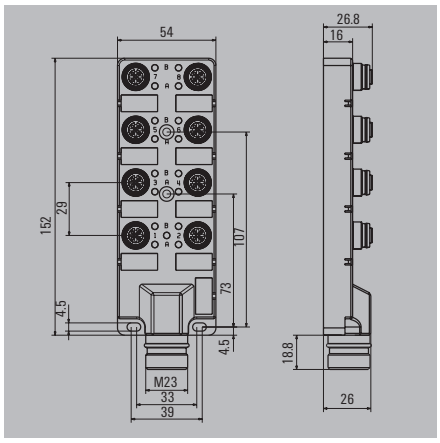


### Ordering data

| Complete modules | | SAI-4/8-SH | | 4-pole | SAI-4/8-SH | | 5-pole |
|---|---|---|---|---|---|---|---|
| | | Type | QTY | Order No. | Type | QTY | Order No. |
| | 4 channel | SAI-4-SH 4P FC | 1 | 1859110000 | SAI-4-SH 5P FC | 1 | 1859130000 |
| | 8 channel | SAI-8-SH 4P FC | 1 | 1859120000 | SAI-8-SH 5P FC | 1 | 1859140000 |
| Note | | | | | | | |

### Technical data

| | |
|---|---|
| Operating voltage | 10...30 V |
| Current of continuous busbars | 2 A |
| max. current-carrying capacity per slot | 4 A |
| Total current | 9 A |
| Pollution severity | 3 |
| Protection degree | IP 67 |
| Ambient temperature range | -25...+80 °C |
| Housing main material | PA 6 GF |
| Contact carrier material | PBT (UL 94 V0) |
| Base material of contacts | CuZn, pre-nickeled, gold-plated |
| screw socket | CuZn, nickel-plated |
| Housing colour | grey, RAL 7032 |
| Flammability class UL 94 | V-0 |
| Clamping range of hood-version | |
| Suitable for dragline cable (fixed cable connection) | |

### Wiring diagram

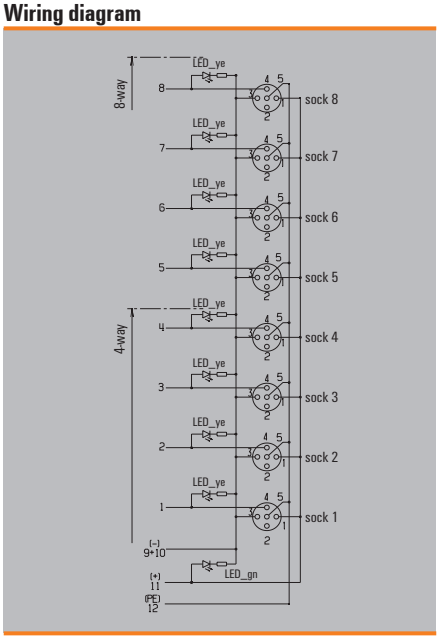


### Wiring diagram

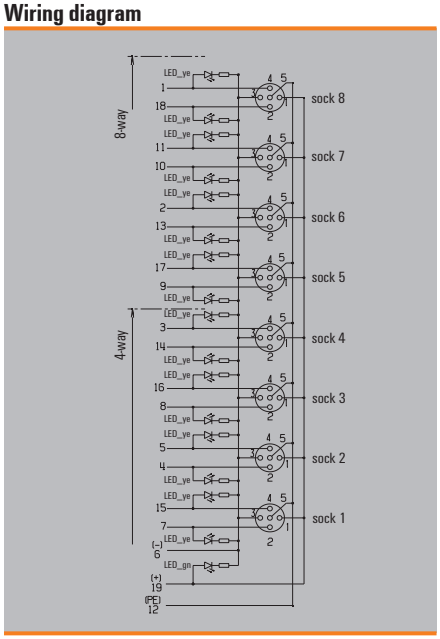

## With M23 outlet

## SAI-4/8-M23

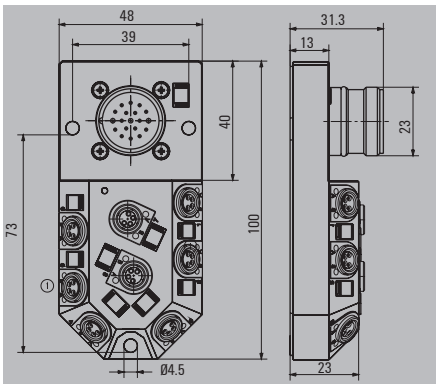


## Ordering data

| SAI-4/8-M23 | | M23 |
|---|---|---|
| **Type** | **QTY** | **Order No.** |
| SAI-4-M23 4P M8 | 1 | 1784660000 |
| SAI-8-M23 4P M8 | 1 | 1784650000 |
| Other versions on request | | |

| 4-pole | |
|---|---|
| | 4 channel |
| | 8 channel |
| **Note** | |

## Technical data

| | |
|---|---|
| Operating voltage | 10...30 V |
| Current of continuous busbars | 2 A |
| max. current-carrying capacity per slot | 2 A |
| Total current | 8 A |
| Pollution severity | 3 |
| Protection degree | IP 68 |
| Ambient temperature range | -20...+90 °C |
| Housing main material | Pocan |
| Contact carrier material | PBT (UL 94 V0) |
| Base material of contacts | CuZn, pre-nickeled, gold-plated |
| screw socket | CuZn, nickel-plated |
| Housing colour | grey, RAL 7032 |
| Flammability class UL 94 | V-0 |
| Clamping range of hood-version | |
| Suitable for dragline cable (fixed cable connection) | |

## Dimensioned drawing

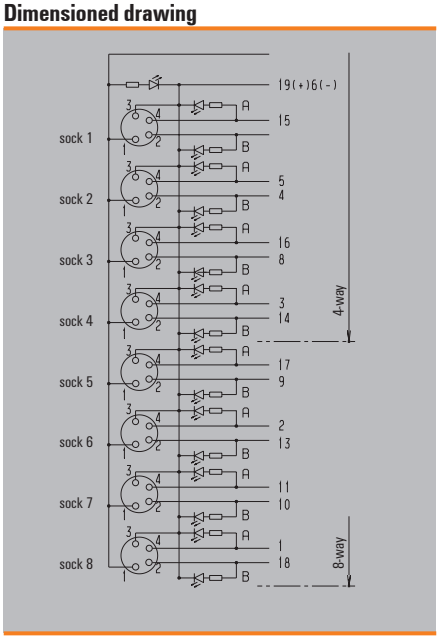

# Cable connector

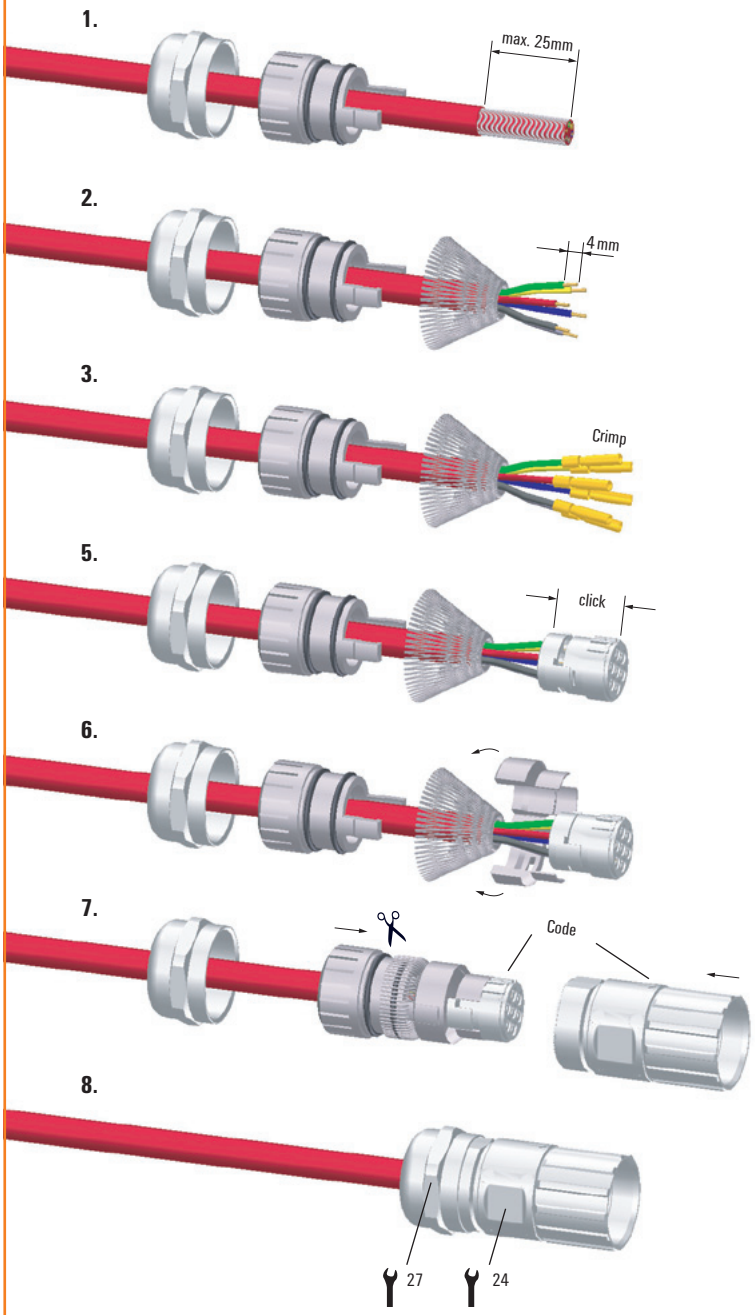


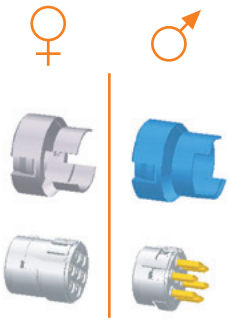

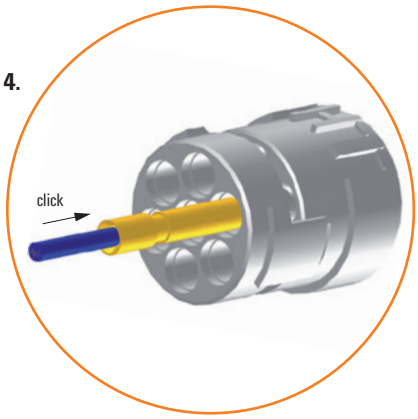

# Angled connector

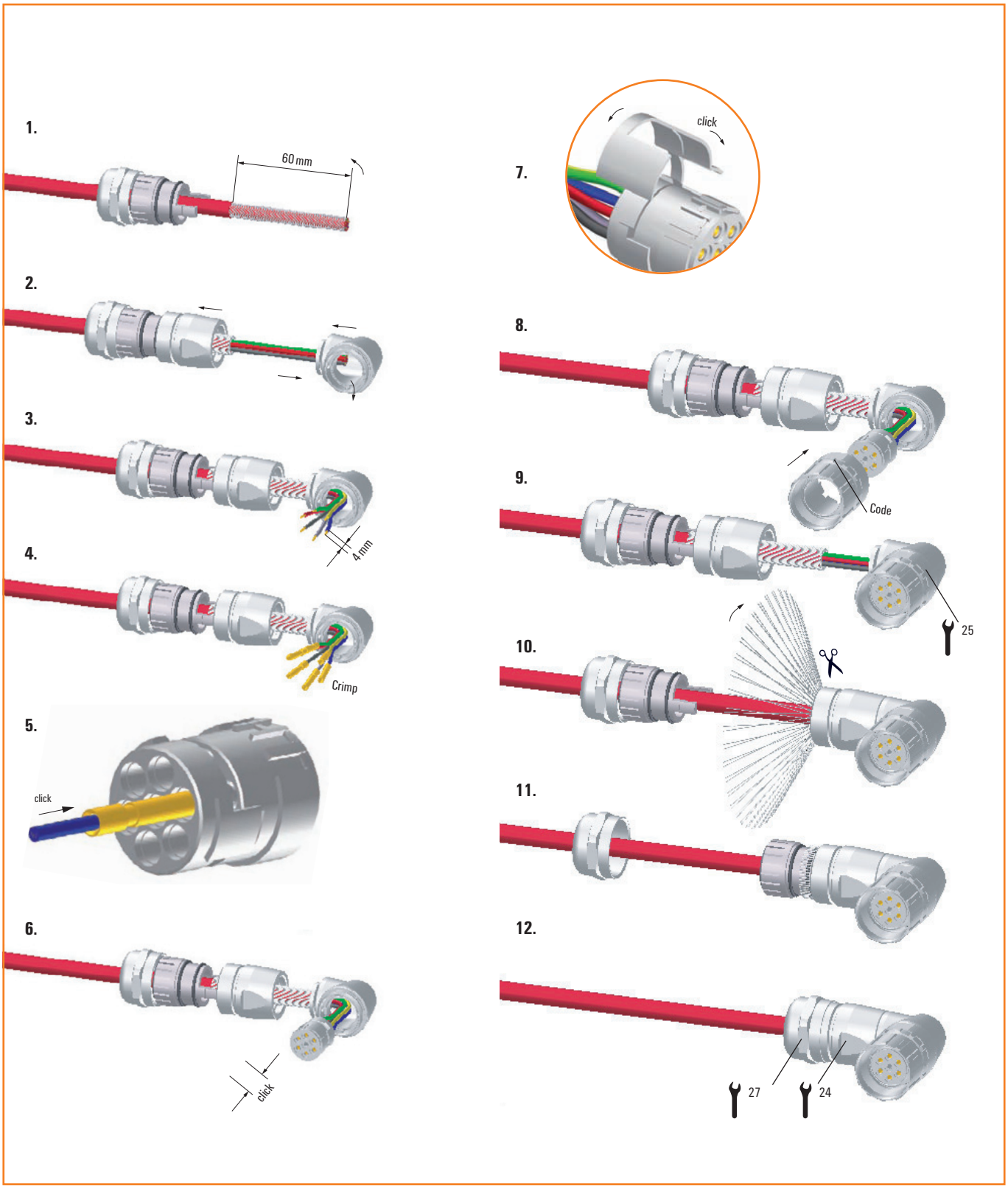

# Device connector with knurled nut

1.

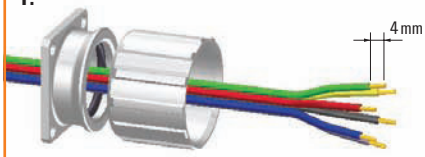


2.

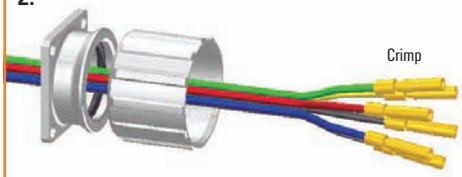


3.

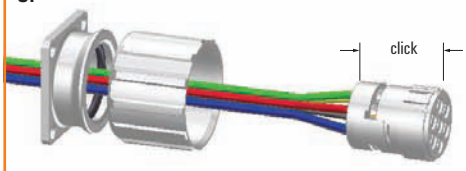


5.

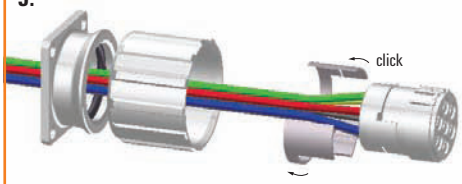


6.

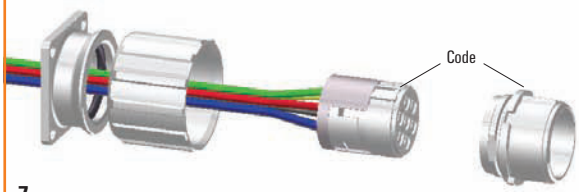


7.

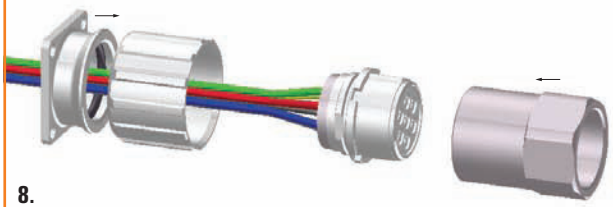

8.

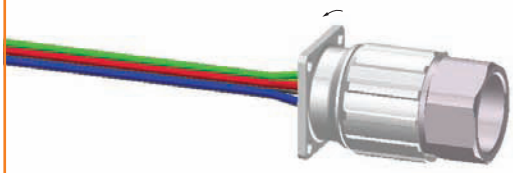

1238870000

4.

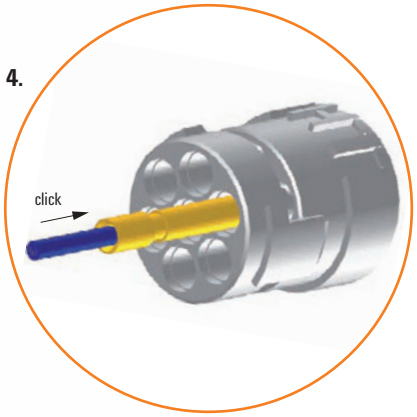

# Device connector, male

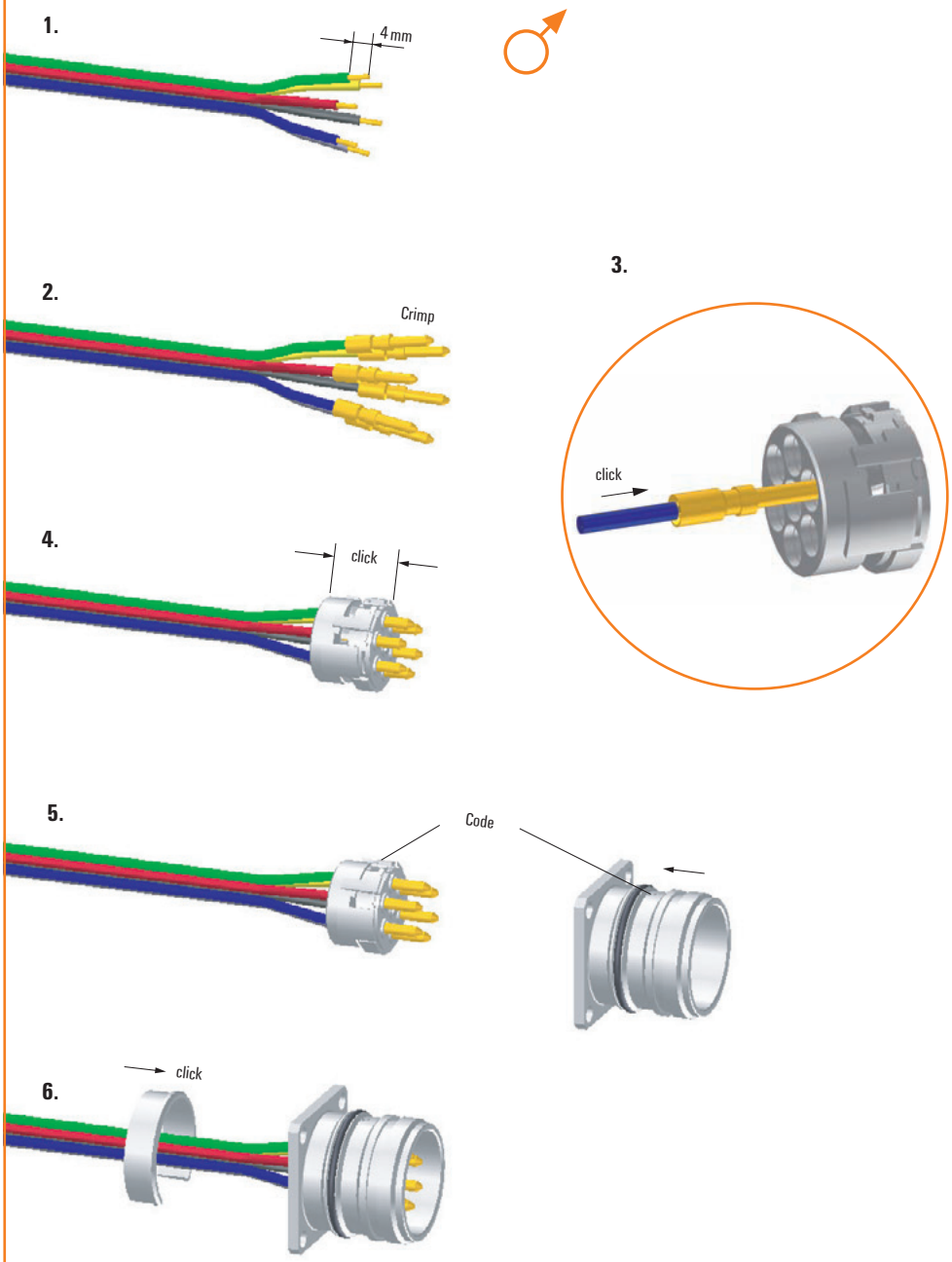

# Device connector, female

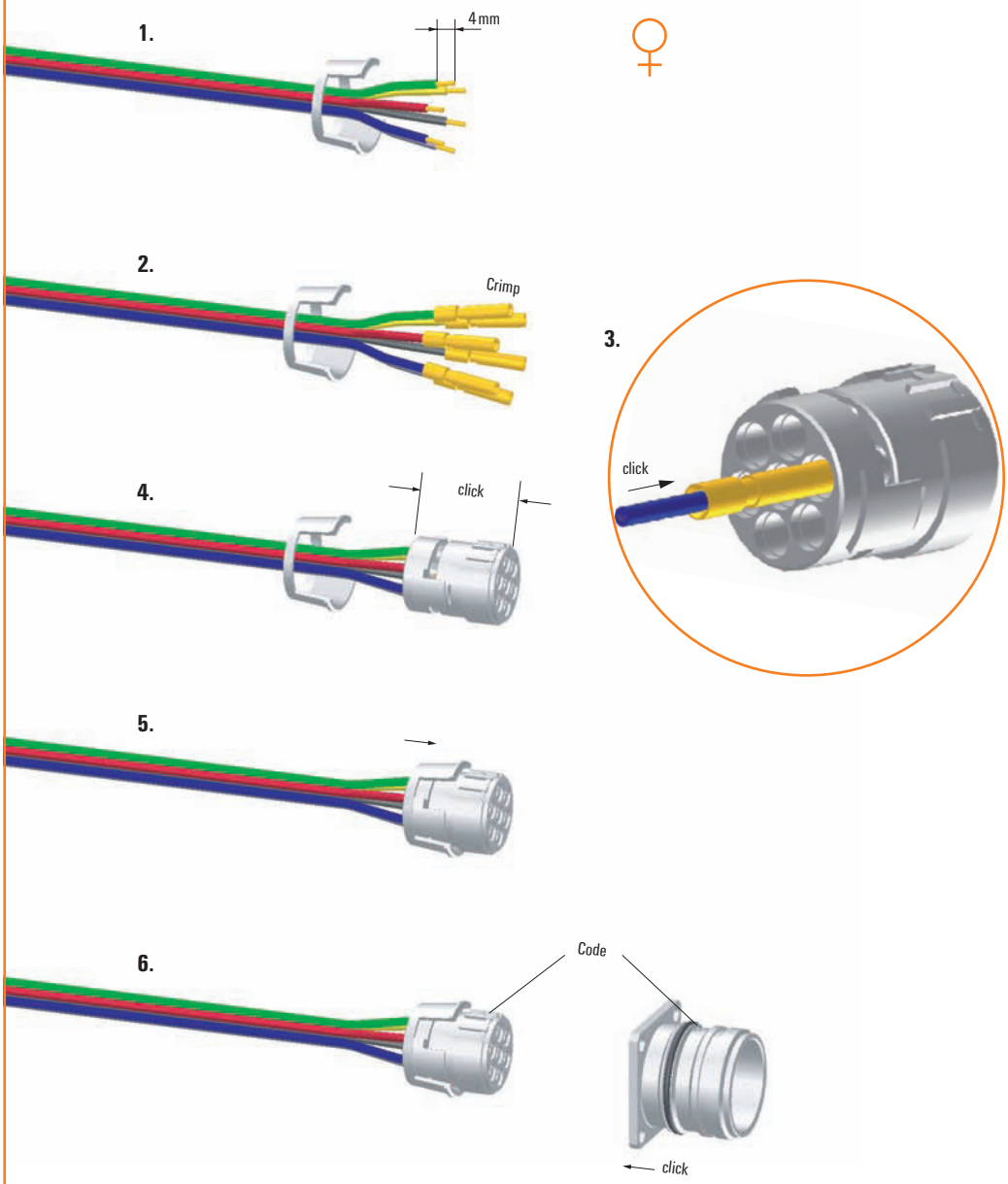

# Cable connector

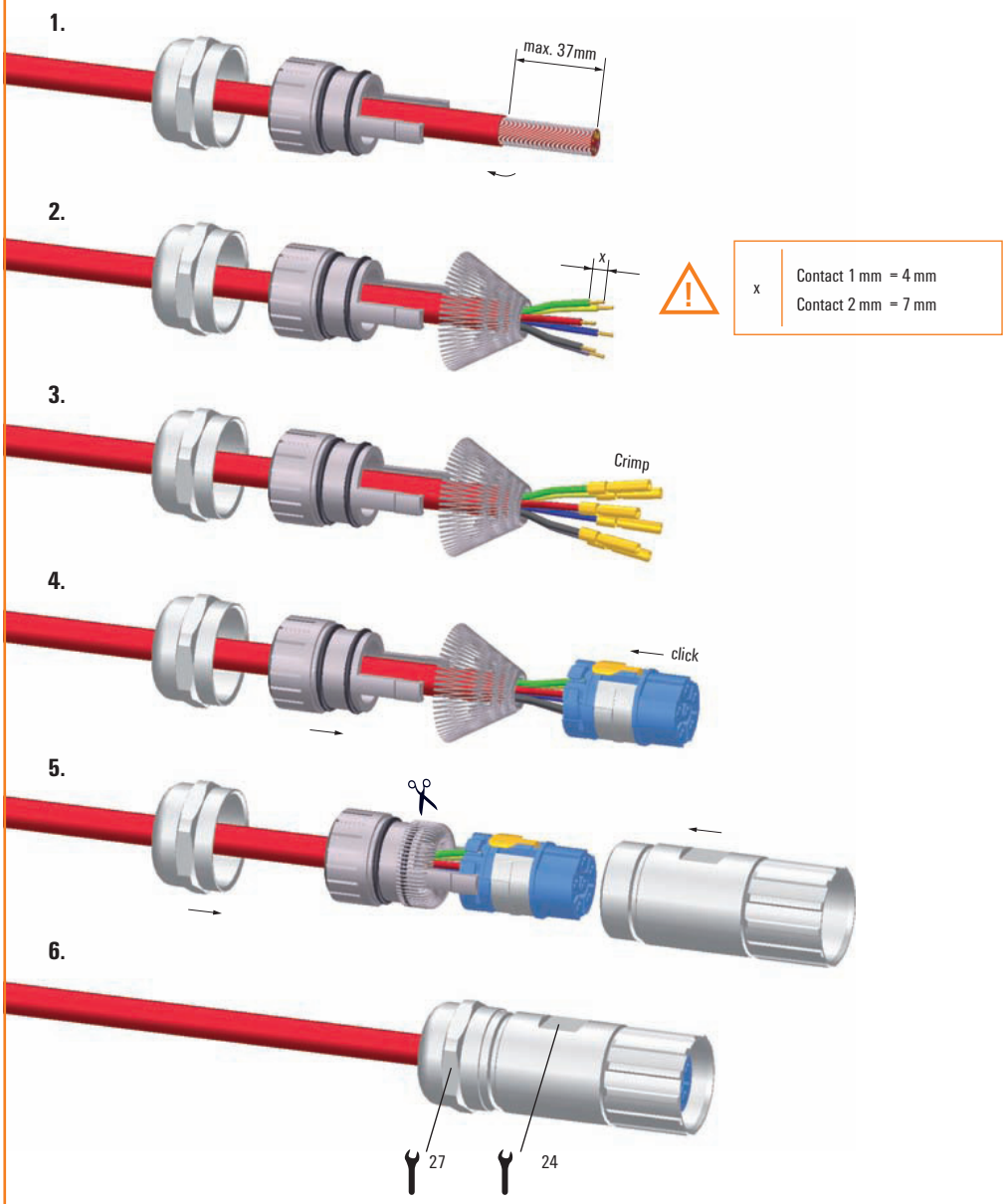

# Device connector

1.

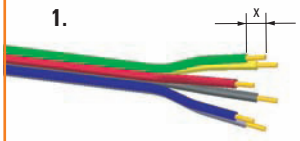


| x | Contact 1 mm = 4 mm<br>Contact 2 mm = 7 mm |
|---|---|

2.

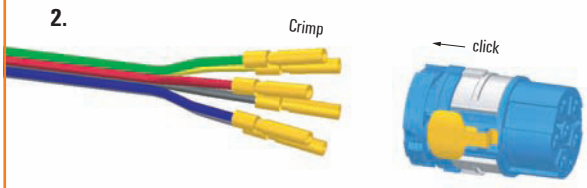


3.

4.

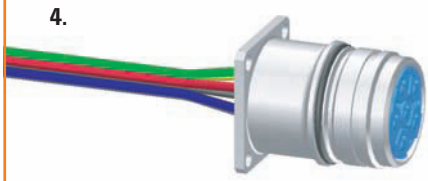

# Device connector

1.

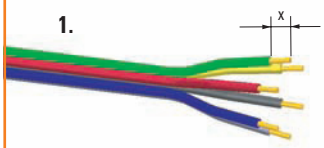


| x | Contact 1 mm = 4 mm<br>Contact 2 mm = 7 mm |
|---|---|

2.

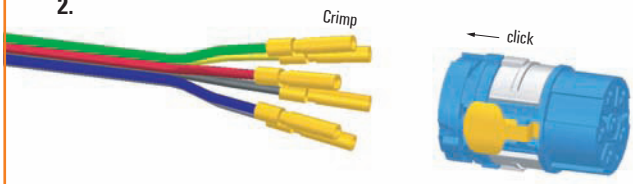


3.

4.

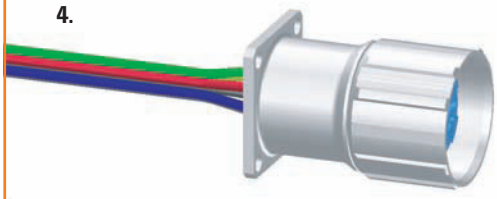

# Device connector, single-hole mount

1.

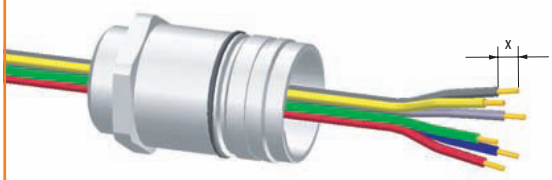


| x | Contact 1 mm = 4 mm<br>Contact 2 mm = 7 mm |
|---|---|

2.

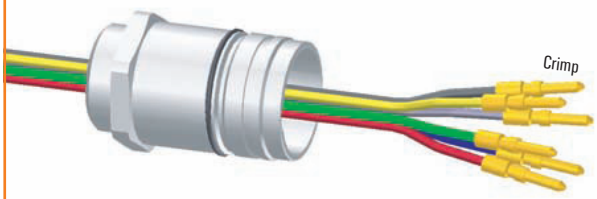


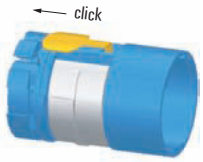


3.

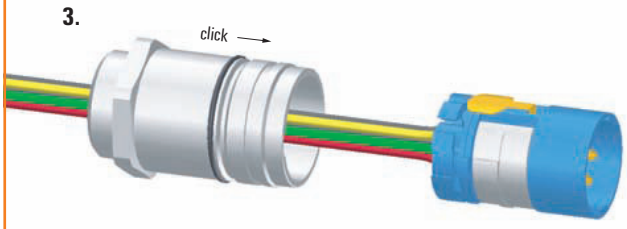


4.

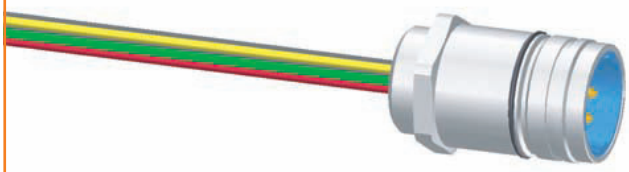

# M23 connector

### Easy to assemble

- An integrated approach for all plug sizes
- A patented assembly module consisting of terminal insert and insulating body
- Assembly and shield connection combined into one step
- Simple, quick and safe assembly in the housing

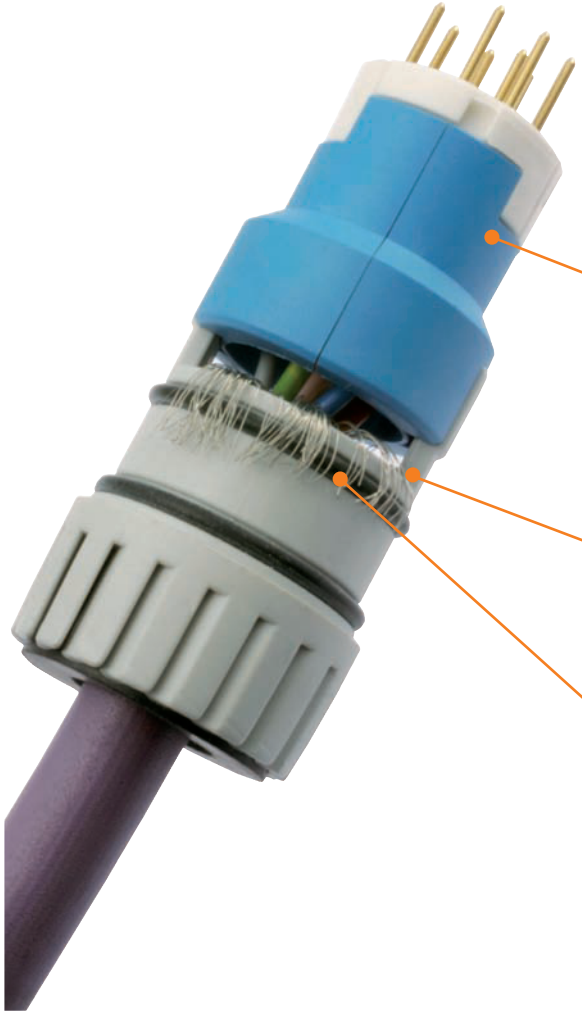

### Flexibility

Total modularity means flexibility Male or female inserts can even be used with any of the housing types for the M23 power connectors.

The concise layout of this connector range and the reduced number of individual parts has clear benefits for the user – quicker assembly and easier installation.

The spacer sleeves are colour-coded for the male and female inserts.

Assembly and shield connection are combined into one step.

The snap-on terminal insert protects the cable outlet from getting twisted.

The variable shield connection ensures secure EMC protection for both light and heavy shielding braid.

## Secure contact with SLS® technology

The new, premium-grade contact – the spring-loaded socket (SLS®) system

- Integrated spring takes the pin contact and clasps it radially
- Outstanding electrical characteristics with the most secure contact
- Quick assembly: solder contacts already tin-plated

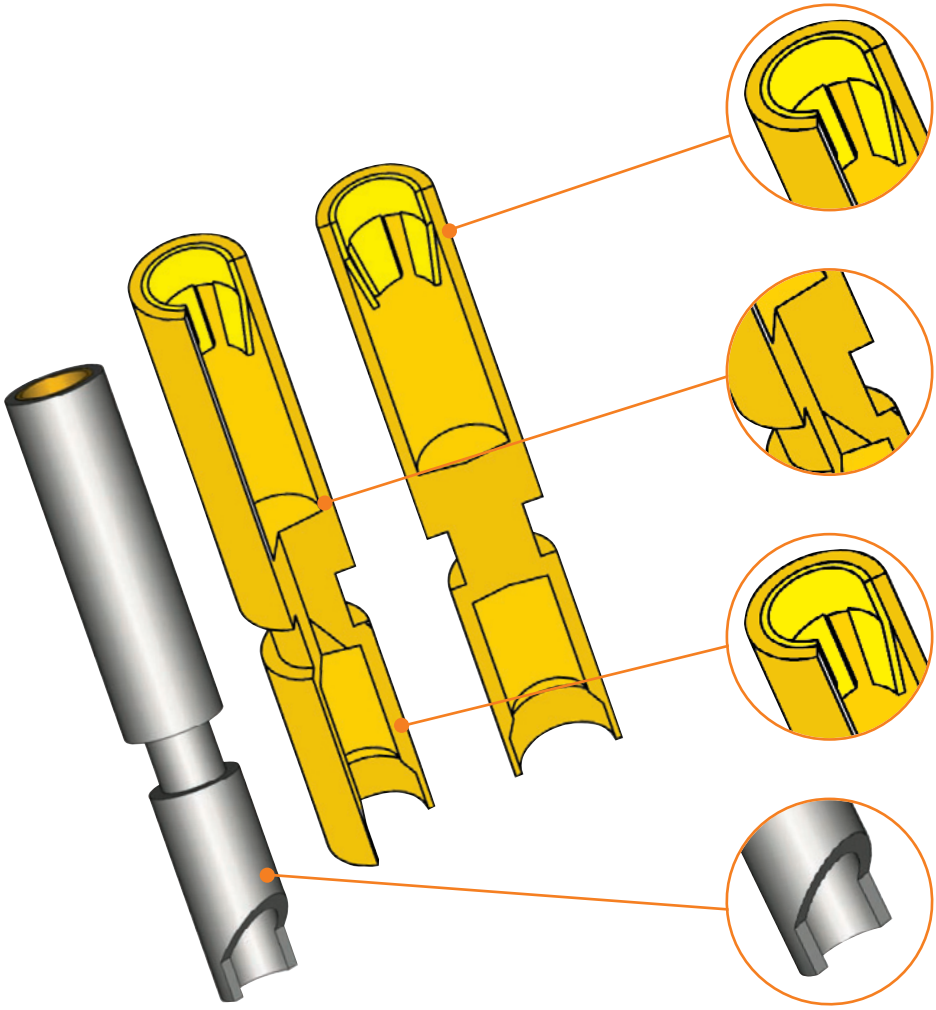

The radially clasped spring mechanism made from copper beryllium ensures minimal insertion force and high number of plugging cycles.

The cylindrical outer shape of the female contact guarantees that the plugging process is properly centred.

Gold-plated contact surfaces provides minimal contact resistances.

Tin plated surfaces on the solder contacts helps to save time during assembly.

### Euro-Lock system® for a secure mount

Euro-Lock system® – the patented interlock system

- The integrated support clip locks the contacts into the insulating body
- Contacts are easy to install and remove
- No special tool is required

### High-quality cable gland

- Replaceable male or female inserts in each type of housing
- Integrated strain relief mechanism with patented HSK cable gland
- Internationally certified, with proven and established quality

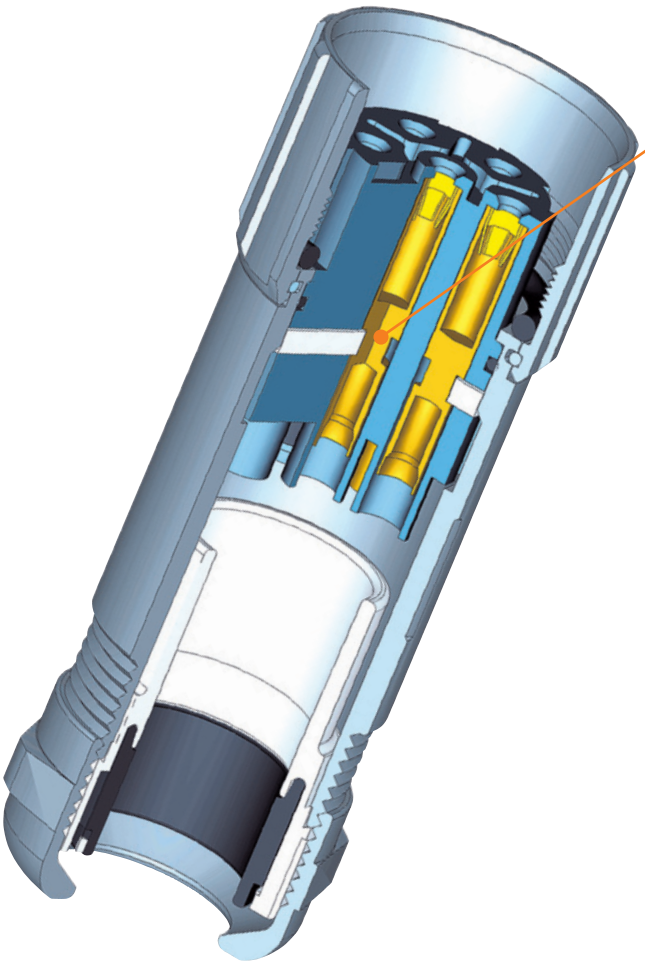

Secure contact interlock

Quick assembly

Simple removal of contacts

Complete installation and removal without any special tools

# Tools and markers


| | | |
|---|---|---|
| **Tools and markers** | Introduction | K.2 |
| | Screwty® | K.4 |
| | Cutting tools | K.7 |
| | Sheathing and insulation stripping tools | K.8 |
| | Stripping and cutting tools | K.9 |
| | M23 crimping tools | K.12 |
| | Identification systems | K.14 |

# SAI tools

The Screwty® is a state-of-the-art tool that features a unique, patented retention method. The adjustable torque ensures that the connectors have actually been sealed tightly. The Screwty® attachment for M23 is also very important because the sealing method for the M8 and M12 connectors are comparable to the M23.

The fact that the Screwty® attachment slips back is a major advantage of this system. This means that it does not have to be re-applied, as would be the case when using an open ended wrench. There is also no risk that the screw can loosen when you turn the tool the wrong way since the Screwty® is only capable of exerting force in one direction.

It is also possible to put other tool attachments on the 1/4"-drive. This allows the use of torque spanner wrenches or torque screwdrivers.  This is also available without torque for those who cannot fit a torque tool into their budgets.

The Screwty® can also be used to screw on M23 connectors.

The tool does not have to be re-applied. During the follow-up it simply slips back.

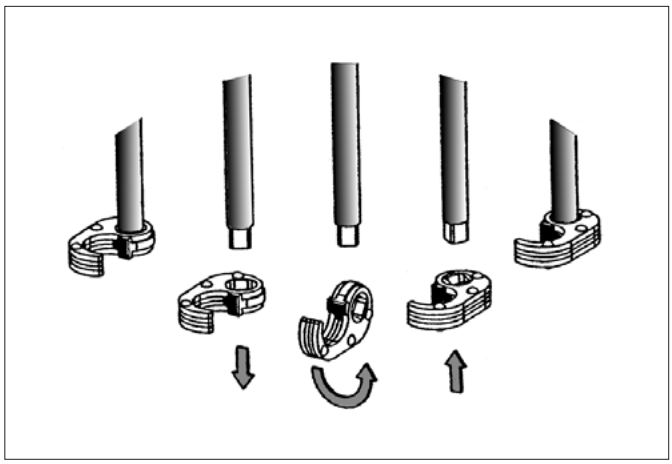

You can change the function from closed to open by simply turning it around.

The Screwty® can also be purchased as a set with other suitable attachments.

## Screwty® torque

- Screw-on circular plug, safety sealed
- Easier work

## Cutting tools

- Cutting shape for various cable sizes
- Cutting without deformation of the conductor

## Sheathing and insulation stripping tools

- No need to adjust cutting depth
- No damage to inner conductors

## Stripping and cutting tool

- Special, self adjusting stripping blades do not damage the conductor

**Screwty®**
Bolting tools

**Cutting tools**

**Sheathing and insulation stripping tools**

**Stripping and cutting tools**

**SAI M23 crimping tool**

**Identification systems**

# Screwty® for M8/M12/M23

**The Torque Screwty®**
- Easier work
- Screw on circular plug, safety sealed

**The perfect tool for all situations**

Screwty® is the ideal, universal tool for tightening and releasing cable glands on all common sensor and actuator cables. The Screwty® can also reach those round plugs normally considered inaccessible! No great force is required, simply turn the tool to tighten or release the plug in connector as required.
The Screwty® also fits the majority (more than 90 %) of the cables and plug-in connectors of other suppliers and is therefore a unique tool that is useful worldwide. The Screwty® consists of a handle with a conventional 1/4" fitting. This means it can be used for all sizes: for M12 and M8 round plugs, and the M12F and M8F types, as well as for plugs and sockets on custom cables.
The Screwty® is suitable for the following round plugs:

| Size | M8 | M8F | M12 | M12F |
|---|---|---|---|---|
| | 10 ±0.3 mm | 11.9 ±0.3 mm | 14.5 ±0.3 mm | 19.8 ±0.3 mm |
| Thread | M8x1 | M8x1 | M12x1 | M12x1 |

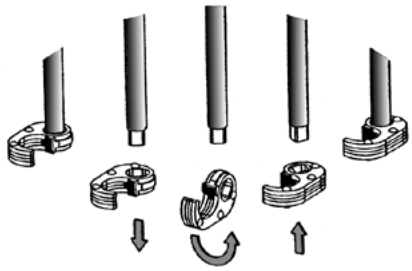

Simply turn the ratchet to tighten or loosen the cable gland.

An adjustable torque fitting is also available for the Screwty®, for guaranteeing extra reliability during installation.
The torque can be infinitely adjusted between 0.5 and 1.7 Nm. This accurate setting enables all round plugs to be tightened precisely with a pre-set torque.

Weidmüller specifies the following torques for its round plugs:

| Size | M8 | M8F | M12 | M12F |
|---|---|---|---|---|
| Torque | 0.5-0.6 Nm | 0.5-0.6 Nm | 0.8-1.2 Nm | 0.8-1.2 Nm |
| Thread | M8x1 | M8x1 | M12x1 | M12x1 |

The Screwty® can also be fitted with other blades to create a torque screwdriver. You can find these blades in our catalogue "Tools".

Use of an M12 Screwty®

**1. Position Screwty®,**
**2. tighten connector,**
**3. finished!**

Use of an M23 Screwty®

## Screwty® standard

### Ordering data

| Type | Use | Qty. | Order No. |
|---|---|---|---|
| Screwty® M12 | moulded M12 lines | 1 | 1900000000 |
| Screwty® M8 | moulded M8 lines | 1 | 1900010000 |
| Screwty® M12 F | M12 plugs for custom assembly | 1 | 1900020000 |
| Screwty® M8 F | M8 plugs for custom assembly | 1 | 1900030000 |

## Screwty® Set

### Ordering data

| Type | | Qty. | Order No. |
|---|---|---|---|
| Screwty® Set | | 1 | 1910000000 |
| **Fittings** | | | |
| **Type** | **Contents** | | |
| Screwty® Set | 1x Screwty® standard handle + 1 M12, M8, M12 F, M8 F attachments | | |

## Screwty® attachments

**Screwty® M8 attachment** | **Screwty® M8 F attachment** | **Screwty® M12 attachment** | **Screwty® M12 F attachment** | **Screwty® M23 attachment**

### Ordering data

| Type | Qty. | Order No. |
|---|---|---|
| Screwty® M12 KO o. SD | 1 | 1900100000 |
| Screwty® M8 KO o. SD | 1 | 1900110000 |
| Screwty® M12F KO o. SD | 1 | 1900120000 |
| Screwty® M8F KO o. SD | 1 | 1900130000 |
| Screwty® M23 LS | 1 | 1981560000 |

| Legend: | |
|---|---|
| F | for custom assemblies |
| DM | torque |
| KO o. SD | ratchet only (attachment) |
| Screwty® | screwdriver |
| Screwty® DM | torque screwdriver, interchangeable blade |
| WK | interchangeable blade |
| LS | power plug |

## Screwty® with torque fitting

Setting aid for Screwty® with torque fitting (included)

### Ordering data

| Type | Use | Qty. | Order No. |
|---|---|---|---|
| Screwty®-M12-DM | moulded M12 lines with torque requirement | 1 | 1900001000 |
| Screwty®-M8-DM | moulded M8 lines with torque requirement | 1 | 1900011000 |
| Screwty®-M12 F-DM | M12 plugs, custom assembly with torque requirement | 1 | 1900021000 |
| Screwty®-M8 F-DM | M8 plugs, custom assembly with torque requirement | 1 | 1900031000 |

| Fittings | |
|---|---|
| **Type** | **Contents** |
| Screwty®-M12-DM | 1 interchangeable blade, 1 torque handle, 1 setting aid for Screwty® torque, 1 Screwty® M12 attachment |
| Screwty®-M8-DM | 1 interchangeable blade, 1 torque handle, 1 setting aid for Screwty® torque, 1 Screwty® M18 attachment |
| Screwty®-M12 F-DM | 1 interchangeable blade, 1 torque handle, 1 setting aid for Screwty® torque, 1 Screwty® M12 F attachment |
| Screwty®-M8 F-DM | 1 interchangeable blade, 1 torque handle, 1 setting aid for Screwty® torque, 1 Screwty® M18 F attachment |

## Screwty® Set-DM

### Ordering data

| Type | | Qty. | Order No. |
|---|---|---|---|
| Screwty® Set-DM | | 1 | 1920000000 |
| **Fittings** | | | |
| **Type** | **Contents** | | |
| Screwty® Set-DM | 1 interchangeable blade, 1 torque handle, 1 setting aid for Screwty® torque, 1 each of Screwty® M12, M8, M12 F, M8 F attachments | | |

## Screwty® interchangeable handle/interchangeable bit

### Ordering data

| Type | Use | Qty. | Order No. |
|---|---|---|---|
| 1/4" handle | | 1 | 4294820000 |
| WK-1/4" (Screwty®) | | 1 | 1862200000 |

## SAI tool boxes

### SAI-Screwty® Box

- Stripping of PVC and PUR sensor/actuator cables
- Tightening of M8 and M12 round connectors with adjustable torque setting

#### Accessories

| Article description | Qty. |
|---|---|
| Stripping tool Stripper 6–16 for plastic-sheathed cables up to 10 mm outside diameter | 1 |
| Torque screwdriver DMS manual for 0.5–1.7 Nm | 1 |
| Torque screwdriver DMS manual for 2.0–8.0 Nm | 1 |
| Screwty® attachment for plug-in connectors* M8 | 1 |
| Screwty® attachment for plug-in connectors* M8F | 1 |
| Screwty® attachment for plug-in connectors* M12 | 1 |
| Screwty® attachment for plug-in connectors* M12F | 1 |
| Carry case | 1 |

*) Screwing attachment for M8/10 mm; M8F/11.9 mm; M12/14.5 mm; M12/19.8 mm;
F...male and female connectors for custom assembly .

#### Ordering data

| Type | Order No. |
|---|---|
| SAI-SCREWTY BOX | 1939180000 |

### SAI-Screwty® Tool Box

- Screwing of M8 and M12 round connectors with adjustable torque setting
- Tightening of slot-head and cross-head screws (PZ and PH)

#### Accessories

| Article description | Qty. |
|---|---|
| Torque screwdriver DMS manual for 0.5–1.7 Nm | 1 |
| Torque screwdriver DMS manual for 2.0–8.0 Nm | 1 |
| Inbus 2.5 / 3.0 / 4.0 | 1 |
| Slot 0.5 x 3.0 | 1 |
| Slot 0.8 x 4.0 | 1 |
| Slot 0.6 x 3.5 | 1 |
| Cross PH0 | 1 |
| Cross PH1 | 1 |
| Cross PH1 | 1 |
| Torx® T8 | 1 |
| Torx® T10 | 1 |
| Torx® T20 | 1 |
| Torx® T25 | 1 |
| Screwty® attachment for plug-in connectors* M8 | 1 |
| Screwty® attachment for plug-in connectors* M8F | 1 |
| Screwty® attachment for plug-in connectors* M12 | 1 |
| Screwty® attachment for plug-in connectors* M12F | 1 |
| Carry case | 1 |

*) Screwing attachment for M8/10 mm; M8F/11.9 mm; M12/14.5 mm; M12/19.8 mm;
F...male and female connectors for custom assembly .

#### Ordering data

| Type | Order No. |
|---|---|
| SAI-SCREWTY TOOL BOX | 1939170000 |

## Cutting tools

- Cutting formation for different cable sizes increases the quality of the cuts for smaller cross-sections
- Not suitable for steel wires, steel-armoured cables, aluminium alloys and hard-drawn copper conductors!
- Cutting without deformation of the conductor

### KT 8

### KT 12

max. 8 mm

max. 16 mm²

max. 16 mm²

max. 16 mm²

max. 12 mm

max. 16 mm²

max. 25 mm²

max. 35 mm²

## Technical data

| Max. cutting performance, copper cable | | KT8 | KT12 |
|---|---|---|---|
| Copper cable - solid, max. | mm²/- | 16 / 6 | 16 / 6 |
| Copper cable - stranded, max. | mm²/- | 16 / 6 | 25 / 3 |
| Copper cable - flexible, max. | mm²/- | 16 / 6 | 35 / 2 |
| Copper cable, max. diameter | mm | 8 | 12 |
| **Max. cutting performance, aluminium cable** | | | |
| Stranded aluminium cable, max (mm²) | mm²/- | 16 / 6 | 25 / 6 |
| Stranded aluminium cable, max. diameter | mm | 8 | 8 |
| Single-core aluminium cable, max.(mm²) | mm² | 16 | 25 |
| **Data / telephone / control cable** | | | |
| Data / telephone / control cable, max. Ø | mm | 8 | 12 |
| **Tool data** | | | |
| Length / Width / Height | mm | 165 / 65 / 25 | 215 / 66 / 28 |
| Weight | g | 180 | 300 |
| **Note** | | Tool closed | Tool closed |

## Ordering data

| Version | Type | Qty. | Order No. | Type | Qty. | Order No. |
|---|---|---|---|---|---|---|
| | KT 8 | 1 | 9002650000 | KT 12 | 1 | 9002660000 |
| **Note** | | | | | | |

## Special sheathing and insulation stripping tools

- Quick and accurate stripping
- No need to adjust cutting depth
- No damage to inner conductors

### Stripper 6-16

**Stripper 6-16**
The Stripper 6-16 insulation stripping tool is for removing the outer sheath of sensor cables. No damage to inner wires can occur because the blades have a specially ground surface. Adjusting the tool to different cross-sections is unnecessary. The visual scale of 15 to 20 mm enables quick and precise stripping of outer insulation.

### AM 12

**For UTP and STP data cables**

- Cutting of UTP and STP data cables and other flexible copper cables with a diameter of up to 4 mm² (~AWG11)
- Stripping of the outer insulation of UTP and STP data cables and other round cables with Ø approx. 0.5 ... 12.5 mm
- No damage to the shielding or conductor due to adjustable stripping blade
- Length end stop for repeated cutting and stripping lengths

K

## Technical data

| Max. stripping performance | | Stripper 6-16 | AM 12 |
|---|---|---|---|
| Cable model | | suitable for PVC and PUR cables | UTP and STP data cables |
| Conductor diameter | mm | | 0.5...12.5 |
| Depth of cut | | | adjustable |
| **Cutting performance** | | | |
| UTP und STP data cables, max. diameter | mm | | 8 |
| Copper cable - flexible, max. | mm² | | 4 |
| **Tool data** | | | |
| Length | mm | 165 | 97 |
| Weight | g | 120 | 36 |
| **Note** | | | |

## Ordering data

| Version | Type | Qty. | Order No. | Type | Qty. | Order No. |
|---|---|---|---|---|---|---|
| | STRIPPER 6-16 RED-LINE | 1 | **9203110000** | AM 12 | 1 | **9030060000** |
| | | | | | | |
| **Note** | | | | | | |

## Accessories

| | Type | Qty. | Order No. | Type | Qty. | Order No. |
|---|---|---|---|---|---|---|
| | | | | | | |
| **Note** | | | | Sheathing stripper | | |

## Stripping and cutting tools

- For flexible and solid conductors with PVC insulation
- Cable with double insulation in two processing steps without special adjustment
- Automatic opening of clamping jaws after stripping
- No play in self-adjusting cutting unit
- Long-lasting
- No splicing of single conductors
- Optimised ergonomic design
- Stripping length adjustable via end stop
- Adjustable for different insulation thicknesses
- Selectable partial stripping
- Removable handle shells
- Fold-out cutting protection
- Personalised labelling with ESG device markers

### stripax®

**0.08...10 mm²**

- Stripping: PVC-insulated flexible conductors from 0.08...10 mm² (~AWG 28...7)
- Cutting: PVC-insulated flexible conductors from 0.08...10 mm² (~AWG 28...7)
- Processing of multi-conductors, with thin flat ribbon cables and even multiple conductors in one operation
- No damaging of the conductor due to special, self-adjustable stripping blades

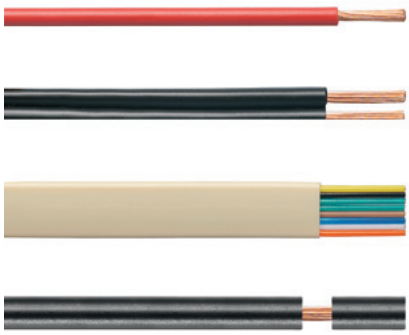

## Technical data

| Max. stripping performance | | STRIPAX® ZERT |
|---|---|---|
| Cable type | | Flexible and solid conductors with PVC insulation |
| Wire cross-section, min. / max.Max. | mm² | 0.08...10 |
| Stripping length , max. | mm | 25 |
| **Cutting performance** | | |
| Conductor cross-section (cutting capacity) | mm² | 6 |
| **Tool data** | | |
| Length | mm | 190 |
| Weight | g | 175 |
| **Note** | | |

## Ordering data

| Version | Type | Qty. | Order No. |
|---|---|---|---|
| | STRIPAX | 1 | 9005000000 |
| | STRIPAX ZERT | 1 | 9017330000 |
| **Note** | | | |

## Accessories

| | Type | Qty. | Order No. |
|---|---|---|---|
| | Replacement stripping blade | 1 | 1119030000 |
| **Note** | | | |

## multi-stripax®

**A multifunctional stripping tool for use on a multitude of conductor insulation forms and configurations – even those not covered by the standard**

**multi-stripax® the troubleshooter**

- Interchangeable stripping units
- Proper stripping of any conductor round, flat or special profiles, thanks to the specially shaped stripping blades
- Incorporates cutting function for up to 2.5 $mm^2$ solid and 6 $mm^2$ fine
- Fatigue free operation thanks to ergonomic design
- No damage to conductor or remaining insulation
- Best stripping results for industrial applications
- Stripping results reproduced accurately time and time again
- A long lasting, reliable tool thanks to its robust design
- Plus, the customary Weidmüller repair service

**Special stripping units – the answer to diverse stripping tasks**

The multi-stripax® tool, distinguished by its robust design, was developed, following customer feedback, to handle all the stripping tasks they have met with in practice.
Thanks to its interchangeable stripping units, a special solution can be found for every challenge you are likely to meet in the marketplace.

The specially shaped stripping blades guarantee perfect stripping results. The guide plates ensure the correct positioning of the wire and therefore prevent damage to the remaining wire. The clamping jaws hold the conductor with just the right force during the stripping operation and are matched to the specific situation at hand. The flexibility of the multi-stripax® to affect the result of the stripping operations depending on the different variables it encounters makes it a universal troubleshooter.

### Cutting

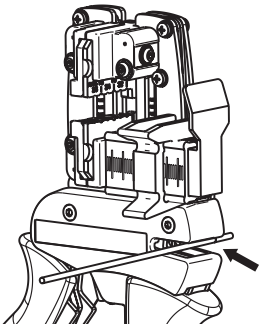

### Positioning

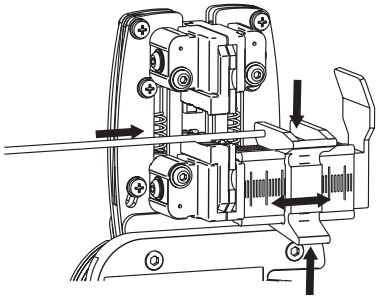

### Stripping

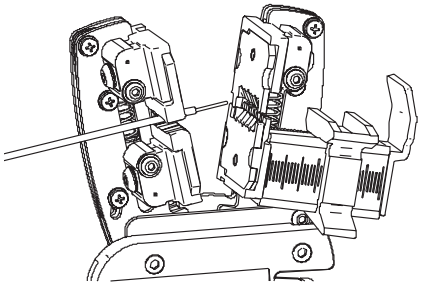



## multi-stripax®

### Technical data

| | |
|---|---|
| Cable Typee | PVC, Teflon, PTE, PUR, silicone, halogen-free |
| Conductor cross-section, min. | 2 mm |
| Conductor cross-section, max. | no limit (in several steps) |
| max. cutting capacity, fine-strand | 6 $mm^2$ |
| max. cutting capacity, solid | 2.5 $mm^2$ |
| max. cutting capacity, ribbon | 10.2 x 4 mm |
| Length/Width/Height | 250 / 85 / 40 mm |
| Weight | 250 g |
| **Note** | |

## multi-stripax® incl. stripping unit

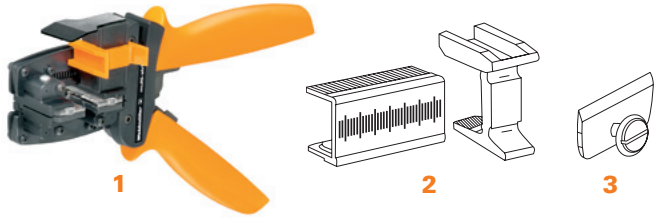


- High quality stripping for industrial applications
- Specially shaped stripping blades enable stripping of special types of insulation and conductor configurations
- Adjustable stop for setting stripping lengths from 2.3 to 30 mm
- Highly flexible thanks to interchangeable stripping units
- Stripping results reproduced accurately time and time again
- No damage to the conductor or insulation
- A long lasting, reliable tool thanks to its robust design
- Integral cutting function for max. 2.5 mm² solid or 6 mm² flexible cables

### Ordering data

| Illustration | Type | Qty. | Order No. | Features |
|---|---|---|---|---|
| 1 | multi-stripax® 6-16 | 1 | 9202210000 | PVC-insulated cables; Cable cross-section 6 up to 16 mm²; max. stripping lengths depends on cable design / cable type<br>1. station solid, stranded and flexible 6 mm²<br>2. station solid, stranded and flexible 10 mm²<br>3. station solid, stranded and flexible 16 mm² double stranded (flexible)<br>Cutting function up to 6 mm² |
| 1 | multi-stripax® ASI | 1 | 9202250000 | ASI Bus cables 2 x 1.5 mm² flexible<br>for PTE, PUR and EPDM insulated cables<br>Stripping of outer insulation and inner cable<br>Cutting function up to 6 mm² 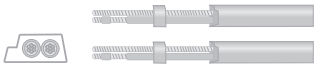 |
| 1 | multi-stripax® GKW LW | 1 | 9205760000 | Railway cable Radox GKW LW; Cable cross-section 1.0; 1.5 and 2.5 mm²<br>max. stripping lengths depends on cable design / cable type<br>Cutting function up to 6 mm² |
| 2 | ERAN multi-stripax® | 1 | 9203100000 | Length stop |
| 3 | ERME multi-stripax® | 1 | 9203070000 | Cutting knife |
| Note | | | | |

## Stripping units for multi-stripax®

### Stripping unit consists of:

Clamping jaws
Short symbol KLBC SPX SP

Insulation stripping tool
Short symbol AIME SPX SP

Guide plate
Short symbol FUEPL SPX SP

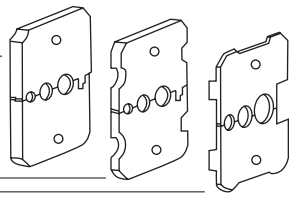

- Highly flexible thanks to interchangeable stripping units
- High quality stripping for industrial applications
- Specially shaped stripping blades enable stripping of special types of insulation and conductor configurations

e = solid
m = stranded
f = finely stranded

### Ordering data

| Type | Qty. | Order No. | Features |
|---|---|---|---|
| AIE multi-stripax® 6-16 | 1 | 9202260000 | PVC-insulated cables; Cable cross-section 6 up to 16 mm²; max. stripping lengths depends on cable design / cable type<br>1. station solid, stranded and flexible 6 mm²<br>2. station solid, stranded and flexible 10 mm²<br>3. station solid, stranded and flexible 16 mm² double stranded (flexible) 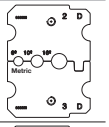 |
| AIE multi-stripax® ASI | 1 | 9202300000 | ASI Bus cables 2 x 1.5 mm² flexible<br>for PTE, PUR and EPDM insulated cables<br>Stripping of outer insulation and inner cable 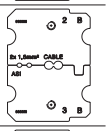 |
| AIE multi-stripax® GKW LW | 1 | 9205770000 | Railway cable Radox GKW LW; Cable cross-section 1.0; 1.5 and 2.5 mm²<br>max. stripping lengths depends on cable design / cable type 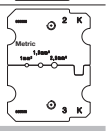 |

# M23 crimping tools

**This tool is suitable for M23 signal connectors and power connectors.**

## SAI M23 crimping tool 1

### Technical data

| Crimp contact | Wire cross-section (mm²) | Crimping mandrel adjustment | Locator position | Order No. |
|---|---|---|---|---|
| Crimp male, signal 1 mm | 0.14 | 0.75 | 11 | **1170150000** |
| | 0.25 | 0.82 | | |
| | 0.34 | 0.90 | | |
| | 0.50 | 1.00 | | |
| | 0.75 | 1.08 | | |
| | 1.00 | 1.20 | | |
| Crimp female, signal 1 mm (0.08-0.56 mm²) | 0.14 | 0.75 | 12 | **1995860000** |
| | 0.25 | 0.80 | | |
| | 0.35 | 0.87 | | |
| | 0.50 | 0.97 | | |
| Crimp female, signal 1 mm (0.34-1.00 mm²) | 0.50 | 0.95 | 12 | **1170180000** |
| | 0.75 | 4.00 | | |
| | 1.00 | 1.05 | | |
| Crimp male, signal 1.5 mm | 0.14 | 0.75 | 3 | **1170220000** |
| | 0.25 | 0.82 | | |
| | 0.35 | 0.90 | | |
| | 0.50 | 0.96 | | |
| | 0.75 | 1.03 | | |
| | 1.00 | 1.00 | | |
| Crimp female, signal 1.5 mm | 0.14 | 0.75 | 4 | **1170230000** |
| | 0.25 | 0.80 | | |
| | 0.35 | 0.87 | | |
| | 0.50 | 0.97 | | |
| Crimp female, signal 1.5 mm (0.34-1.00 mm²) | 0.50 | 0.95 | 4 | **1170240000** |
| | 0.75 | 1.00 | | |
| | 1.00 | 1.05 | | |
| Crimp male, signal 2 mm | 0.75 | 1.30 | 5 | **1170250000** |
| | 1.00 | 1.40 | | |
| | 1.50 | 1.55 | | |
| | 2.50 | 1.75 | | |
| Crimp female, signal 2 mm | 0.75 | 1.30 | 6 | **1170260000** |
| | 1.00 | 1.40 | | |
| | 1.50 | 1.55 | | |
| | 2.50 | 1.75 | | |
| Crimp male, power 1 mm | 0.14 | 0.75 | 1 | **1170390000** |
| | 0.25 | 0.80 | | |
| | 0.35 | 0.85 | | |
| | 0.50 | 1.03 | | |
| | 0.75 | 1.08 | | |
| | 1.00 | 1.13 | | |
| Crimp female, power 1 mm | 0.14 | 0.75 | 2 | **1995830000** |
| | 0.25 | 0.80 | | |
| | 0.35 | 0.85 | | |
| | 0.50 | 0.89 | | |
| | 0.75 | 0.95 | | |
| | 1.00 | 1.02 | | |
| Crimp male, power 2 mm | 0.75 | 1.20 | 7 | **1170400000** |
| | 1.00 | 1.40 | | |
| | 1.50 | 1.55 | | |
| | 2.50 | 1.70 | | |
| Crimp male, power 2 mm | 2.50 | 1.47 | 7 | **1170410000** |
| | 4.00 | 1.60 | | |
| Crimp female, power 2 mm | 0.75 | 1.20 | 8 | **1995820000** |
| | 1.00 | 1.40 | | |
| | 1.50 | 1.55 | | |
| | 2.50 | 1.70 | | |
| Crimp female, power 2 mm | 2.50 | 1.47 | 8 | **1170420000** |
| | 4.00 | 1.60 | | |

### Ordering data

| Type | Order No. |
|---|---|
| SAI M23 CRIMPING TOOL 1 | **1203840000** |

**Adjusting the crimping dimensions**

The adjustment mechanism is used to set the crimping depth of the crimping mandrel as described below.
The adjusting dial is used to prepare the infeed; the dial can be turned clockwise (for decreasing the dimension) or counter-clockwise (for increasing the dimension).

**Adjustment precision**

- 1 division mark on the dial v 1/100 mm adjustment
- 1 complete revolution of the dial v 0.2 mm adjustment read from scale
- 5 revolutions of the dial v 1 mm adjustment read from scale

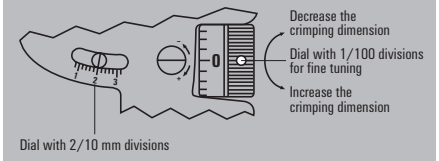


**Verifying the crimping dimension**

The four-mandrel crimping tool is pre-set at the factory.
The actual crimping size should still be checked periodically.
It should be checked using the plug gauge (Ø 2.0 mm) that is included with the crimping tool as described below. Use the dial on the stationary tool shank to set the size to 2.0 mm on the scale. Set to the zero-point tick mark on the dial and close the tool. (Refer to the diagram showing the crimping size adjustment.) At this setting, it should be possible to move the 2.00-mm-Ø plug gauge without any play or extra room. If this is not possible, then the size deviation (+/-) can be determined using the dial's fine-adjustment mechanism. If this size check reveals that the tool is not within the tolerance range specified by the manufacturer of the contacts, then you should contact the manufacture of the tool for further inspection.

**Servicing and maintenance**

Before you start to use the hand crimping tool, it must be clean and in proper working condition. Crimp residue or fragments must be removed from the crimping jaws and locator. The joints should be regularly lubricated using machine oil to protect them from dirt. Make sure that all bolts are secured with locking rings.

**This tool is only suitable for M23 signal connectors.**

**Operation mode**

The following table specifies the locator positions and the crimping dimensions for various crimping contacts. The contact is inserted through the tool into the locator; this ensures the proper crimping position. The inserted contact is secured by closing gently (approximately to first snap-close level). Now the cable can be easily inserted and it is not possible for the contact to fall out. The tool must be pressed together until it reaches the end stop position in order to function properly. It is then able to open automatically which brings the crimping process to a close in the intended manner.

## SAI M23 crimping tool 2

**Adjusting the crimping dimensions**

The adjustment mechanism is used to set the crimping depth of the crimping mandrel as described below.
The adjusting dial is used to prepare the infeed; the dial can be turned clockwise (for decreasing the dimension) or counter-clockwise (for increasing the dimension).

**Adjustment precision**

- 1 division mark on the dial v 1/100 mm adjustment
- 1 complete revolution of the dial v 0.2 mm adjustment read from scale
- 5 revolutions of the dial v 1 mm adjustment read from scale

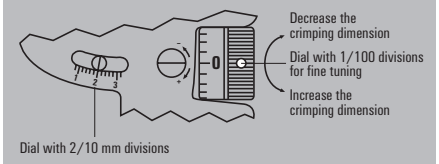


**Verifying the crimping dimension**

The four-mandrel crimping tool is pre-set at the factory. The actual crimping size should still be checked periodically. It should be checked using the plug gauge (Ø 1.0 mm) that is included with the crimping tool as described below. Use the dial on the stationary tool shank to set the size to 1.0 mm on the scale. Set to the zero-point tick mark on the dial and close the tool. (Refer to the diagram showing the crimping size adjustment.) At this setting, it should be possible to move the 1.00-mm-Ø plug gauge without any play or extra room. If this is not possible, then the size deviation (+/-) can be determined using the dial's fine-adjustment mechanism. If this size check reveals that the tool is not within the tolerance range specified by the manufacturer of the contacts, then you should contact the manufacture of the tool for further inspection.

**Servicing and maintenance**

Before you start to use the hand crimping tool, it must be clean and in proper working condition. Crimp residue or fragments must be removed from the crimping jaws and locator. The joints should be regularly lubricated using machine oil to protect them from dirt. Make sure that all bolts are secured with locking rings.

## Technical data

| Crimp contact | Wire cross-section ($mm^2$) | Crimping mandrel adjustment | Locator position | Order No. |
|---|---|---|---|---|
| Crimp male 1 mm | 0.14 | 0.86 | 1 | **1170150000** |
| | 0.25 | 0.90 | | |
| | 0.34 | 0.95 | | |
| | 0.56 | 0.98 | | |
| | 0.75 | 1.03 | | |
| | 1.00 | 1.08 | | |
| Crimp female 1 mm | 0.08 | 0.75 | 2 | **1995860000** |
| (0.08-0.56 $mm^2$) | 0.14 | 0.78 | | |
| | 0.25 | 0.82 | | |
| | 0.34 | 0.86 | | |
| | 0.56 | 0.90 | | |
| Crimp female 1 mm | 0.34 | 0.77 | 2 | **1170180000** |
| (0.34-1.00 $mm^2$) | 0.56 | 0.82 | | |
| | 0.75 | 0.88 | | |
| | 1.00 | 0.95 | | |
| Crimp male 1.5 mm | 0.14 | 0.65 | 3 | **1170220000** |
| | 0.25 | 0.68 | | |
| | 0.34 | 0.72 | | |
| | 0.56 | 0.81 | | |
| | 0.75 | 0.95 | | |
| | 1.00 | 1.07 | | |
| Crimp female 1.5 mm | 0.14 | 0.70 | | **1170230000** |
| (0.14-0.75 $mm^2$) | 0.25 | 0.73 | | |
| | 0.34 | 0.77 | | |
| | 0.56 | 0.85 | | |
| | 0.75 | 1.05 | | |
| Crimp female 1.5 mm | 0.34 | 0.88 | | **1170240000** |
| (0.34-1.00 $mm^2$) | 0.56 | 0.95 | | |
| | 0.75 | 1.05 | | |
| | 1.00 | 1.13 | | |
| Crimp male 2.0 mm | 0.75 | 1.20 | | **1170250000** |
| | 1.00 | 1.35 | | |
| | 1.50 | 1.45 | | |
| | 2.50 | 1.60 | | |
| Crimp female 2.0 mm | 0.75 | 1.25 | | **1170260000** |
| | 1.00 | 1.35 | | |
| | 1.50 | 1.45 | | |
| | 2.50 | 1.60 | | |

## Ordering data

| Type | Order No. |
|---|---|
| SAI M23 CRIMPING TOOL 2 | **1203960000** |

# SlimFix Clip

The SlimFix Clip combines two advantages in one: its unique closure mechanism offers the reliability of a closed marker with the ease of attaching an open marker. The Clip closure mechanism also allows quick, no fuss attachment of the markers after the wires have been installed. SlimFix Clip markers are suitable for wires and cables with external diameters up to 5 mm. Long sequences of characters are possible on the large marking surface – up to 30 mm.

- Halogen-free, flammability class V2 material
- Narrow markers with reliable attachment thanks to compensation feature
- Clip closure mechanism ensures permanent attachment following wire installation
- Rapid attachment without tools
- Three sizes for wire cross-sections from 0.5 – 10.0 mm²
- Available in lengths of 12, 21 and 30 mm
- Markers available in the proven MultiCard format
- Additional marking surface for precise assignment to projects
- Custom-printed markers supplied to your specifications

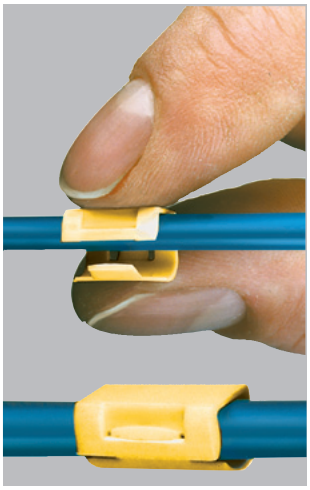

## Technical data

| | |
|---|---|
| Material | Polyamide 66, halogen-free |
| UL 94 flammability rating | V2 |
| Temperature range | –40 °C to 100 °C |
| Printing | black |

## Ordering data

| Type | Wire, ext. ø | Wire cross-section |
|---|---|---|
| SFC 0 | 1.5 - 2.5 mm | 0.5 - 1.0 mm² |
| SFC 1 | 2.0 - 3.5 mm | 0.75 - 2.5 mm² |
| SFC 2 | 2.5 - 5.0 mm | 2.5 - 4.0 mm² |
| SFC 2.5 | 4.0 - 6.0 mm | 4.0 - 10.0 mm² |
| SFC 3 | 3.5 - 7.0 mm | 4.0 - 10.0 mm² |
| Colour | Other colours on request<br>● brown ● orange ● green<br>● violet ● grey | |
| Special printing | Specify special printing and colours per diskette, Excel file or using the M-Print® PRO software. | |
| Minimum order quantity | 1 pack | |

**Note:** SlimFix Clip markers can be printed with PrintJet.

## SFC - blank

**Technical data**

| | |
|---|---|
| Material | Polyamide |
| UL 94 flammability rating | V2 |
| Min. temperature, continuous | -40 °C |
| Max. temperature, continuous | 100 °C |

## Ordering data

| Type | Length | Qty. | Order No. white | Order No. yellow | Order No. blue | Order No. red | Custom printing |
|---|---|---|---|---|---|---|---|
| SFC 0/12 | 12 | 200 | 1813130000 | 1813160000 | 1813170000 | 1813150000 | |
| SFC 1/12 | 12 | 200 | 1747320001 | 1747320004 | 1747320002 | 1747320003 | |
| SFC 2/12 | 12 | 120 | 1758320001 | 1758320004 | 1758320002 | 1758320003 | |
| SFC 2.5/12 | 12 | 120 | 1062000000 | 1062010000 | 1062030000 | 1062020000 | 1062040000 |
| SFC 3/12 | 12 | 80 | 1025220000 | 1025230000 | 1025250000 | 1025240000 | 1025550000 |
| SFC 0/21 | 21 | 200 | 1813190000 | 1813210000 | 1813220000 | 1813200000 | |
| SFC 1/21 | 21 | 200 | 1779080001 | 1779080004 | 1779080002 | 1779080003 | |
| SFC 2/21 | 21 | 120 | 1805810000 | 1805780000 | 1805770000 | 1805790000 | |
| SFC 2.5/21 | 21 | 120 | 1062050000 | 1062070000 | 1062090000 | 1062080000 | 1062110000 |
| SFC 3/21 | 21 | 80 | 1025260000 | 1025270000 | 1025300000 | 1025290000 | 1025560000 |
| SFC 0/30 | 30 | 150 | 1813240000 | 1813260000 | 1813270000 | 1813250000 | |
| SFC 1/30 | 30 | 150 | 1805760000 | 1805730000 | 1805720000 | 1805740000 | |
| SFC 2/30 | 30 | 90 | 1805870000 | 1805830000 | 1805820000 | 1805850000 | |
| SFC 3/30 | 30 | 60 | 1025310000 | 1025320000 | 1025340000 | 1025330000 | 1025570000 |

# Marker tags for sensor cables

### Sleeves for marking sensor cables

Unique marking and identification of sensor/actuator cables can be achieved with a marker tag. Each cable has a sleeve that accepts a marker tag TM-I 18. Cables open at one end have one sleeve, connecting cables have two marker sleeves. The TM-I 18 is available in various colours.

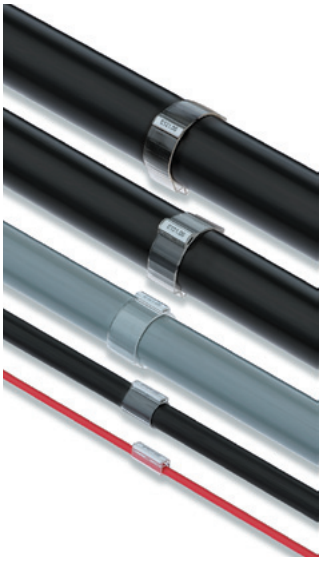

### Ordering data

| Type | Colour | Order No. |
|---|---|---|
| **Sleeve** | | |
| TM 203/18 VO | transparent | 1798480000 |
| TM 4/18 HF/HB | transparent | 1719850000 |
| **Marker** | | |
| TM-I 18 NEUTRAL WS | white | 1718431044 |
| TM-I 18 NEUTRAL GE | yellow | 1718431687 |

**The Weidmüller PrintJet PRO identification system prints marker tags quickly, reliably and individually.**

The **PrintJet PRO** inkjet printer prints markers for electric connectivity. These markers can be used for clear equipment identification on devices, cables and connectors. The labelling makes servicing, maintenance and troubleshooting much easier. Water-based ink is used for the spot colour printing. The print is crystal clear and resistant to environmental influences.

The **PrintJet PRO** prints plastic markers in **MultiCard** format. In combination with the user-friendly **M-Print® PRO** software and the attached loader, the printer becomes an essential part of the production.The inkjet process being used, the subsequent fusing, as well as the printer cartridge and ink have all been specially adapted by Weidmüller for industrial use. The printer has excellent long-term use capabilities, thanks to its integrated loader.



### Ordering data — PrintJet PRO

| Type | | Order No. |
|---|---|---|
| PrintJet PRO 115V | | 1024050000 |
| PrintJet PRO 230V | | 1001180001 |
| **Accessories** | | |
| PJ PRO TNTK INK SET COL | Ink tank starter set, colour | 1027110000 |
| PJ PRO TNTK INK K | ● Ink tank Black | 1027040000 |
| PJ PRO TNTK INK C | ● Ink tank Cyan | 1027050000 |
| PJ PRO TNTK INK M | ● Ink tank Magenta | 1027060000 |
| PJ PRO TNTK INK Y | ● Ink tank Yellow | 1027070000 |
| PJ PRO TNAW | Ink collecting tray | 1024140000 |

# Marker tags for distributors

Marker tags can be affixed to distributors to ensure unique identification. For marking our standard M12 products, ESG 9/20 tags are used. M8 and M5 distributors can be labelled with WS 10/5 and DEK 5 markers. For labelling metal distributors, self-adhesive ESG 9/17 must be used.

In the case of the SAI Active family, we differentiate between SAI Active Universal and SAI Active Line. For labelling of Active Universal, we offer ESG 8/13.5/43.3 SAI AU. For labelling of Active Line, the ESG 9/6 is used.

All of these markers are available in MultiCard format and can therefore also be printed using our innovative PrintJet PRO marking solutions.

## DEK for marking of M8 and M5 distributors

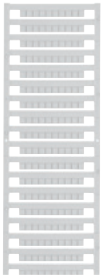

### DEK – Blank

| Type | Colour | Width/Length | Qty. | Order No. |
|---|---|---|---|---|
| DEK 5/5 MC | white | 5 mm/5 mm | 1000 | **1609801044** |

### DEK – Custom printing

| Type | Colour | Width/Length | Qty. | Order No. |
|---|---|---|---|---|
| DEK 5/5 MC | white | 5 mm/5 mm | 200 | **1609810000** |

## WS for marking of M8 and M5 distributors

### WS – Blank

| Type | Colour | Width/Length | Qty. | Order No. |
|---|---|---|---|---|
| WS 10/5 MC | white | 5 mm/10 mm | 720 | **1635000000** |
| WS 15/5 MC | white | 5 mm/15 mm | 480 | **1609880000** |

### WS – Custom printing

| Type | Colour | Width/Length | Qty. | Order No. |
|---|---|---|---|---|
| WS 10/5 MC | white | 5 mm/10 mm | 144 | **1635010000** |
| WS 15/5 MC | white | 5 mm/15 mm | 96 | **1609890000** |

## ESG for marking of M12 distributors

### Ordering data

| Type<br>for SAI Active Line | Colour | Width/Length | Qty. | Order No. |
|---|---|---|---|---|
| ESG 9/20 MC NEUTRAL WS | white | 20 mm/9 mm | 200 | **1609940000** |

## ESG for marking of M12 Universal distributors

### Ordering data

| Type<br>for SAI Active Universal | Colour | Width/Length | Qty. | Order No. |
|---|---|---|---|---|
| ESG 8/13.5/43.3 SAI AU | transparent | 13.5 mm/43.3 mm/8 mm | 5 | **1912130000** |

# Technical appendix


| | | |
|---|---|---|
| **Technical appendix** | Sensor Actuator Interface Passive – Overview | W.2 |
| | Coding systems | W.4 |
| | Sensor Actuator Interface Passive – Connection plan | W.9 |
| | Cable overview | W.10 |
| | Drilling templates | W.12 |
| | Resistence Charts | W.22 |

# Sensor Actuator Interface Passive – Overview

## Technical data

| Material data | | M5 | M8 | M12 |
|---|---|---|---|---|
| Insulating material – Housing | | PA 6 GF | PBT (UL 94 V0) | PBT (UL 94 V0) |
| – Contact carrier | | PA66 | PBT (UL 94 V0) | PBT (UL 94 V0) |
| Base material – Contact | | CuSn4 | CuSn6 | CuSn6 |
| – Screw socket | | CuZn, nickel-plated | CuZn, nickel-plated | CuZn, nickel-plated |
| Temperature range | °C | –25 ...+90 | –20...+90 | –20...+90 |
| Colour – Housing | | grey, RAL 7032 | grey, RAL 7032 | grey, RAL 7032 |
| – PG & contact carrier | | | black | black |
| Cable sheathing | | PUR | PUR | PUR |
| Cable type | | PUR/PVC | halogen-free | halogen-free, UL |
| O-ring | | Viton | Viton | Viton |
| Housing seal | | | | foamed PUR |
| Type of connection, hood version | | | tension clamp | screw/tension clamp |
| Clamping range | $mm^2$ | | 0.08...1.0 | 0.08...1.5 |
| AWG No. | | | 28...18 | 22...14 |
| Stripping length, hood version | mm | | 100 | 100 |
| Stripping length, screw version | mm | | – | 7 |
| Stripping length, tension clamp version | mm | | 7 | 10 |
| Contact surface | | | tin | tin |
| – BL3.5 / B2L | | | | |
| Contact base material | | | Cu alloy | Cu alloy |
| – BL3.5 / B2L | | | | |
| Torques | | | | |
| – Hoods | Nm | | 0.8 | 0.8 |
| – Blanking plugs | Nm | | 0.5 | 0.5 |
| **Mechanical data** | | | | |
| Ingress Protection Class* | IP | 67 | 68 (M16/M23 IP 67) | 68 |
| Suitability for cable carrier | cycles at 15d | 1 Mio. 15d | 1 Mio. 15d | 2 Mio. 10d |
| **IDC connection** | | | | |
| Max. connect. frequency of a cable with same cross-section | | | | – |
| Stripping length | mm | | | |
| Conductor cross-section (flexible) | $mm^2$ | | | – |
| Smallest strand diameter | mm | | | – |
| Conductor insulation material | | | | – |
| Conductor outside diameter | mm | | | – |
| Cable outside diameter | mm | | | – |
| Pin assignment | | | | – |
| **Electrical data to VDE 110 (Apr 97)** | | | | |
| Operating voltage | V- | 10 ... 30 | 10 ... 30 | 10 ... 30 |
| Max. current carrying capacity per I/O signal | A | 1 | 2 (Derating) | 2 (Derating) |
| – total with single supply | A | 3 | 8 | 10 (9 A for F-version) |
| – total with dual supply | A | – | – | 2 x 8 = 16 |
| Rated voltage | $V_{eff}$ | 24 | 32 | 32 |
| Test voltage | $kV_{eff}$ | | 1.0 | 1.0 |
| Pollution severity | | | 3 | 3 |
| Insulation resistance | Ω | | $> 10^9$ | $> 10^9$ |
| **Other data** | | | | |
| Dimensions | see chapter G | | | |
| Fixing holes | see chapter G | | | |
| Function indicators | | | | |
| – for operating voltage | | 1 x LED, green | 1 x LED, green | 2 x LED, green |
| – for I/O function | | 1 x LED, yellow (per function) | 1 x LED, yellow (per function) | 1 x LED, yellow (per function) |
| Current isolation (SAI-... -M) | | | – | via 2 jumper plugs |
| Cable strain relief (SAI-... -M) | | | M20 | M20 |
| Max. cable diameter (SAI-... -M) | mm | | 10–14 | 6–12 |

* only when plugged in and secured

## Technical data

| Material data | | IDC | M12 Push-Pull |
|---|---|---|---|
| Insulating material – Housing | | PBT (UL 94 V0) | PA 6 GF |
| – Contact carrier | | PBT (UL 94 V0) | PBT (UL 94 V0) |
| Base material – Contact | | CuZn, pre-nickeled & gold-plated | CuSn6 |
| – Screw socket | | CuZn, nickel-plated | CuZn, nickel-plated |
| Temperature range | °C | –20 ... +90 | –25 ... +80 |
| Colour – Housing | | grey, RAL 7032 | grey, RAL 7032 |
| – PG & contact carrier | | black | black |
| Cable sheathing | | PUR | PUR |
| Cable type | | PUR/PVC | halogen-free, UL |
| O-ring | | Viton | Viton |
| Housing seal | | foamed PUR | foamed PUR |
| Type of connection, hood version | | screw/tension clamp | tension clamp |
| Clamping range | $mm^2$ | 0.08 ... 1.5 | 0.08 ... 1.5 |
| AWG No. | | 22 ... 14 | 22 ... 14 |
| Stripping length, hood version | mm | 100 | 100 |
| Stripping length, screw version | mm | 7 | 7 |
| Stripping length, tension clamp version | mm | 10 | 10 |
| Contact surface – BL3.5 / B2L | | tin | tin |
| Contact base material – BL3.5 / B2L | | Cu alloy | Cu alloy |
| Torques | | | |
| – Hoods | Nm | 0.8 | 0.8 |
| – Blanking plugs | Nm | 0.5 | |
| **Mechanical data** | | | |
| Ingress Protection Class* | IP | 67 | 68 |
| Suitability for cable carrier | cycles at 15d | 1 Mio. 15d | 2 Mio. 10d |
| **IDC connection** | | | |
| Max. connect. frequency of a cable with same cross-section | | 10 | |
| Stripping length | mm | 15 ... 20 | |
| Conductor cross-section (flexible) | $mm^2$ | 0.25 ... 0.5 | |
| Smallest strand diameter | mm | 0.1 | |
| Conductor insulation material | | PVC/PE/PUR | |
| Conductor outside diameter | mm | 1.2 ... 1.6 | |
| Cable outside diameter | mm | 3.5 ... 5.0 | |
| Pin assignment | | see next page | |
| **Electrical data to VDE 110 (Apr 97)** | | | |
| Operating voltage | V- | 10 ... 30 | 10 ... 30 |
| Max. current carrying capacity per I/O signal | A | 2 (Derating) | 2 |
| – total with single supply | A | 10 (9 A for F-version) | 10 |
| – total with dual supply | A | 2 x 8 = 16 | |
| Rated voltage | $V_{eff}$ | 32 | 32 |
| Test voltage | $kV_{eff}$ | 1.0 | 1.0 |
| Pollution severity | | 2 | 3 |
| Insulation resistance | Ω | $> 10^9$ | |
| **Other data** | | | |
| Dimensions | see chapter G | | |
| Fixing holes | see chapter G | | |
| Function indicators | | | |
| – for operating voltage | | 2 x LED, green | 1 x LED, green |
| – for I/O function | | 1 x LED, yellow (per function) | 1 x LED, yellow (per function) |
| Current isolation (SAI-... -M) | | via 2 jumper plugs | |
| Cable strain relief (SAI-... -M) | | M20 | M20 |
| Max. cable diameter (SAI-... -M) | mm | 6–12 | 6–12 |

* only when plugged in and secured

# Contact assignment

## SAI-M/SAI-F – IDC

### 3-pole:

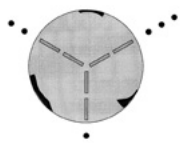

| Pole | Colour code | Assignment |
|---|---|---|
| 1 | brown | + 24 V DC |
| 2 | white | input/output |
| 3 | blue | 0 V DC |

### 4-pole:

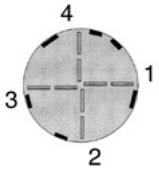


| Pole | Colour code | Assignment |
|---|---|---|
| 1 | brown | + 24 V DC |
| 2 | no colour | input/output 2 |
| 3 | blue | 0 V DC |
| 4 | black | input/output 1 |

## M23

### 12-pole:

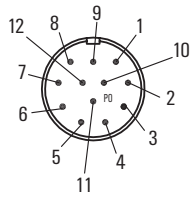


Male

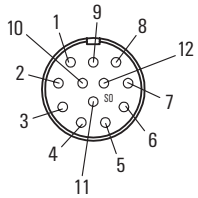


Female

| Pole | Colour code | Plug-in station | Contact M12 |
|---|---|---|---|
| 1 | white | 1 | 4 |
| 2 | green | 2 | 4 |
| 3 | yellow | 3 | 4 |
| 4 | grey | 4 | 4 |
| 5 | pink | 5 | 4 |
| 6 | red | 6 | 4 |
| 7 | black | 7 | 4 |
| 8 | violet | 8 | 4 |
| 9 | blue (–) | 1 – 8 | 3 |
| 10 | blue (–) | 1 – 8 | 3 |
| 11 | brown (+) | 1 – 8 | 1 |
| 12 | green-yellow (PE) | 1 – 8 | 5 |

### 19-pole:

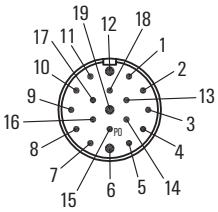


Male

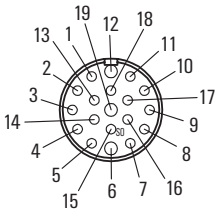


Female

| Pole | Colour code | Plug-in station | Contact M12 |
|---|---|---|---|
| 1 | violet | 8 | 4 |
| 2 | red | 6 | 4 |
| 3 | grey | 4 | 4 |
| 4 | red/blue | 2 | 2 |
| 5 | green | 2 | 4 |
| 7 | grey/pink | 1 | 2 |
| 8 | white/green | 3 | 2 |
| 9 | white/yellow | 5 | 2 |
| 10 | white/grey | 7 | 2 |
| 11 | black | 7 | 4 |
| 13 | yellow/brown | 6 | 2 |
| 14 | brown/green | 4 | 2 |
| 15 | white | 1 | 4 |
| 16 | yellow | 3 | 4 |
| 17 | pink | 5 | 4 |
| 18 | grey/brown | 8 | 2 |
| 6 | blue (–) | 1 – 8 | 3 |
| 12 | green-yellow (PE) | 1 – 8 | 5 |
| 19 | brown (+) | 1 – 8 | 1 |

# Coding systems for round connectors

Round connectors are used for wiring sensors, actuators and data cables.
To prevent wiring errors, there are different coding systems: for M12, the plug-in connectors are coded A, B and D. The M12 A-coded plug-in connector is available with 3 to 5 pins, 6 to 8 and 9 to 12 pins. There is no coding for M8 and M5.

The arrangement of the pins in the M8 plug-in connector (asymmetrical) rules out the possibility of 3- and 4-pole M8 plug-in connectors being connected together. In the case of M5 plug-in connectors, 3- and 4-pole plug-in connectors can be connected together since the pins are symmetrically arranged.

## A-coded, M12, Sensor wiring

**2- to 5-pole:**

| Pole | Colour code | Assignment |
|---|---|---|
| 1 | brown | + 24 V DC |
| 2 | white | input/output 2* |
| 3 | blue | 0 V DC |
| 4 | black | input/output 1 |
| 5 | grey | FE |
| | Housing | shield** |
| | | |
| | *) = only 5-pole version | **) = only with shielded version |

## A-coded, M12, PROFIBUS-PA

**2- to 5-pole:**

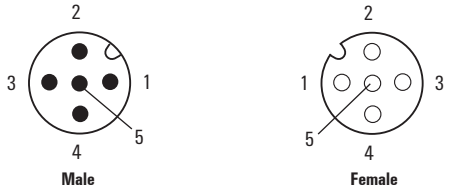


| Pole | Colour code | Assignment |
|---|---|---|
| 1 | red | DATA-B |
| 3 | green | DATA-A |
| Housing | | shield |

## A-coded, M12, CANopen/DeviceNet™

**2- to 5-pole:**

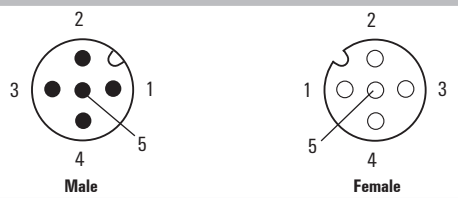


| Pole | Colour code | Assignment |
|---|---|---|
| 1 | | shield (drain wire) |
| 2 | red | V+ |
| 3 | black | V- (CAN_GND) |
| 4 | white | CAN_H signal |
| 5 | blue | CAN_L signal |

## B-coded, M12, PROFIBUS-DP

### 3- to 5-pole:

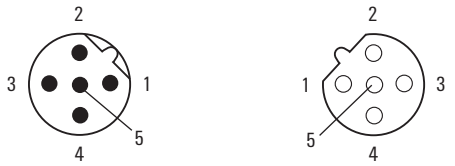


| Pin | Colour code | Assignment |
|---|---|---|
| 2 | green | Data A |
| 4 | red | Data B |
| Housing | | shield |

## D-coded, M12, Industrial Ethernet

*Industrial Ethernet*

### 4-pole:

| Pin | Colour code | Assignment |
|---|---|---|
| 1 | yellow | TD+ (transmit data +) |
| 2 | white | RD+ (receive data +) |
| 3 | orange | TD - (transmit data -) |
| 4 | blue | RD - (receive data -) |
| Housing | | shield |

## M12

### 8-pole:

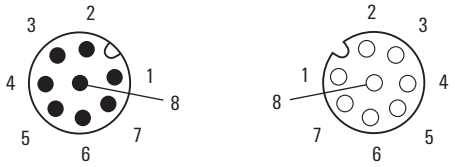


| Pole | Colour code | Assignment |
|---|---|---|
| 1 | white | signal |
| 2 | brown | signal |
| 3 | green | signal |
| 4 | yellow | signal |
| 5 | grey | + 24 V DC |
| 6 | pink | signal |
| 7 | blue | 0 V DC |
| 8 | red | signal |

## M12

### 12-pole:

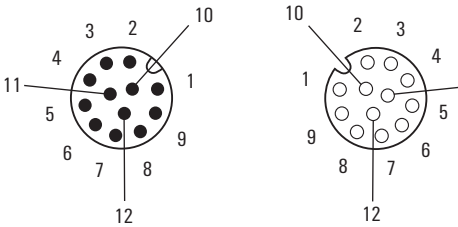


| Pole | Colour code | Assignment |
|---|---|---|
| 1 | brown | + 24 V DC |
| 2 | blue | 0 V DC |
| 3 | white | input/output 1 |
| 4 | green | input/output 1 |
| 5 | pink | input/output 1 |
| 6 | yellow | input/output 1 |
| 7 | black | input/output 1 |
| 8 | grey | input/output 1 |
| 9 | red | input/output 1 |
| 10 | violet | input/output 1 |
| 11 | grey/pink | input/output 1 |
| 12 | red/blue | input/output 1 |

## M8 connector position

### 3-pole:

| Pin | Colour code | Assignment |
|---|---|---|
| 1 | brown | + 24 V DC |
| 3 | blue | 0 V DC |
| 4 | black | input/output 1 |

## M8 connector position

### 4-pole:

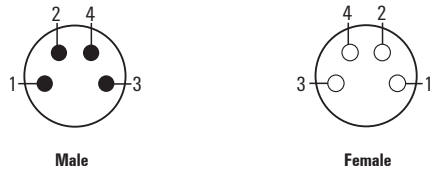


| Pin | Colour code | Assignment |
|---|---|---|
| 1 | brown | + 24 V DC |
| 2 | white | input/output 2 |
| 3 | blue | 0 V DC |
| 4 | black | input/output 1 |

## M5 connector position

### 4-pole:

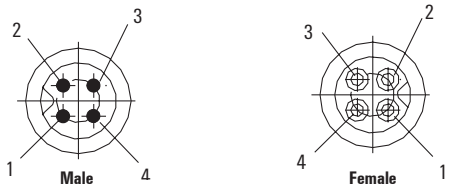


| Pin | Colour code | Assignment |
|---|---|---|
| 1 | brown | + 24 V DC |
| 2 | white | input/output 2 |
| 3 | blue | 0 V DC |
| 4 | black | input/output 1 |

## M23

### 12-pole:

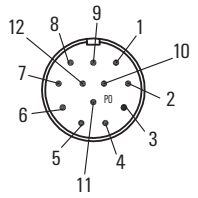


Male

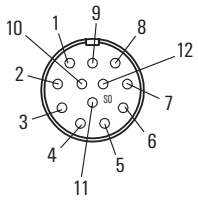


Female

| Pole | Colour code | Assignment | Cross-section |
|---|---|---|---|
| 1 | white | signal | 0.34 |
| 2 | green | signal | 0.34 |
| 3 | yellow | signal | 0.34 |
| 4 | grey | signal | 0.34 |
| 5 | pink | signal | 0.34 |
| 6 | red | signal | 0.34 |
| 7 | black | signal | 0.34 |
| 8 | violet | signal | 0.34 |
| 9 | nc | nc | nc |
| 10 | blue | 0 V DC | 0.75 |
| 11 | brown | + 24 V DC | 0.75 |
| 12 | green/yellow | PE | 0.75 |

## M23

### 19-pole:

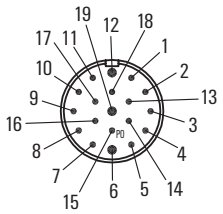


Male

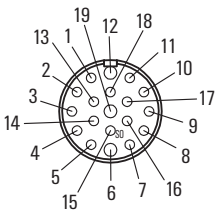


Female

| Pole | Colour code | Assignment | Cross-section |
|---|---|---|---|
| 1 | violet | signal | 0.34 |
| 2 | red | signal | 0.34 |
| 3 | grey | signal | 0.34 |
| 4 | red/blue | signal | 0.34 |
| 5 | green | signal | 0.34 |
| 6 | blue | 0 V DC | 0.75 |
| 7 | grey/pink | signal | 0.34 |
| 8 | white/green | signal | 0.34 |
| 9 | white/yellow | signal | 0.34 |
| 10 | white/grey | signal | 0.34 |
| 11 | black | signal | 0.34 |
| 12 | green/yellow | PE | 0.75 |
| 13 | yellow/brown | signal | 0.34 |
| 14 | brown/green | signal | 0.34 |
| 15 | white | signal | 0.34 |
| 16 | yellow | signal | 0.34 |
| 17 | pink | signal | 0.34 |
| 18 | grey/brown | signal | 0.34 |
| 19 | brown | + 24 V DC | 0.75 |

# Sensor Actuator Interface Passive – Connection plan

**Connection plan** **Conductor colour**

| Terminal Connection No. | | Connector position | M5/M8-contact 3-pole | M5/M8-contact 4-pole | M12-contact | IDC-contact 3-pole | IDC-contact 4-pole | Potential | Conductor colour | Colour code |
|---|---|---|---|---|---|---|---|---|---|---|
| 1 | = | 1 | 4 | 4 | 4 | 2 | 4 | E/A 1-1 | white | WH |
| 2 | = | 2 | 4 | 4 | 4 | 2 | 4 | E/A 2-1 | green | GN |
| 3 | = | 3 | 4 | 4 | 4 | 2 | 4 | E/A 3-1 | yellow | YE |
| 4 | = | 4 | 4 | 4 | 4 | 2 | 4 | E/A 4-1 | grey | GY |
| 5 | = | 5 | 4 | 4 | 4 | 2 | 4 | E/A 5-1 | pink | PK |
| 6 | = | 6 | 4 | 4 | 4 | 2 | 4 | E/A 6-1 | red | RD |
| 7 | = | 7 | 4 | 4 | 4 | 2 | 4 | E/A 7-1 | black | BK |
| 8 | = | 8 | 4 | 4 | 4 | 2 | 4 | E/A 8-1 | violet | VT |
| 9 | = | 1 | – | 2 | 2* | | 2 | E/A 1-2 | grey/pink | GYPK |
| 10 | = | 2 | – | 2 | 2* | | 2 | E/A 2-2 | red/blue | RDBL |
| 11 | = | 3 | – | 2 | 2* | | 2 | E/A 3-2 | white/green | WHGN |
| 12 | = | 4 | – | 2 | 2* | | 2 | E/A 4-2 | brown/green | BNGN |
| 13 | = | 5 | – | 2 | 2* | | 2 | E/A 5-2 | white/yellow | WHYE |
| 14 | = | 6 | – | 2 | 2* | | 2 | E/A 6-2 | yellow/brown | YEBN |
| 15 | = | 7 | – | 2 | 2* | | 2 | E/A 7-2 | white/grey | WHGY |
| 16 | = | 8 | – | 2 | 2* | | 2 | E/A 8-2 | grey/brown | GYBN |
| 17 | = | 1, 3, 5, 7 | 1 | 1 | 1 | 1 | 1 | U1 + (24 V DC) | brown | BN |
| 18 | = | 1, 3, 5, 7 | 3 | 3 | 3 | 3 | 3 | U1 - (0 V) | blue | BU |
| 19 | = | 2, 4, 6, 8 | – | – | 1 | 1 | 1 | U2 + (24 V DC) | red* | RD* |
| 20 | = | 2, 4, 6, 8 | – | – | 3 | 3 | 3 | U2 - (0 V) | black* | BK* |
| 21 | = | 1, 2, 3, 4, 5, 6, 7, 8 | – | – | 5 | – | – | PE | green/yellow | GNYE |

* Contact used in 5-pole version only

**Plug insert, hood version**

**Note:**
SAI distributors with fixed cable have a single supply conductor as standard. The voltage U1 is supplied to all the sockets. An SAI distributor with fixed cable but with separate supply voltage is available on request.

**Tension clamp connection**

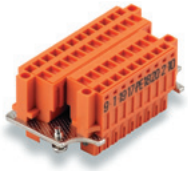

**Pin assignment**

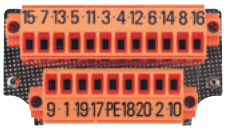


**Screw connection**

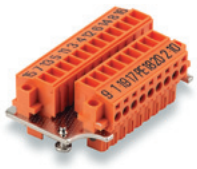

# Cable overview

| Cables | Identification in article designation | Cable gland | Wire number / cross-section | Colour | Colour coding | Suitable for torsion | Wire core insulation |
|---|---|---|---|---|---|---|---|
| **M8 unshielded** | | | | | | | |
| PVC | V | M8 | 3x0.25 mm² | black | BR,BL,SW | No | PVC |
| | V | M8 | 4x0.25 mm² | black | BR,WS,BL,SW | No | PVC |
| PUR halogen-free | U | M8 | 3x0.25 mm² | black | BR,BL,SW | No | TPM |
| | U | M8 | 4x0.25 mm² | black | BR,WS,BL,SW | No | TPM |
| PUR halogen-free yellow | UGE | M8 | 3x0.25 mm² | yellow | BR,BL,SW | No | TPE |
| | UGE | M8 | 4x0.25 mm² | yellow | BR,WS,BL,SW | No | TPE |
| PUR resistant to welding beads | T | M8 | 3x0.34 mm² | black | BR,BL,SW | Yes | TPE |
| | T | M8 | 4x0.34 mm² | black | BR,WS,BL,SW | Yes | TPE |
| **M8 shielded** | | | | | | | |
| PUR halogen-free | U | M8 | 3x0.34 mm² | black | BR,BL,SW | No | PP |
| | U | M8 | 4x0.34 mm² | black | BR,WS,BL,SW | No | PP |
| **M12 unshielded** | | | | | | | |
| PVC | V | M12 | 3x0.34 mm² | black | BR,BL,SW | No | PVC |
| | V | M12 | 4x0.34 mm² | black | BR,WS,BL,SW | No | PVC |
| | V | M12 | 5x0.34 mm² | black | BR,WS,BL,SW,GR | No | PVC |
| PUR halogen-free | U | M12 | 3x0.34 mm² | black | BR,BL,SW | No | TPM |
| | U | M12 | 4x0.34 mm² | black | BR,WS,BL,SW | No | TPM |
| | U | M12 | 5x0.34 mm² | black | BR,WS,BL,SW,GR | No | TPM |
| | U | M12 | 8x0.25 mm² | black | BR,WS,BL,GR,GN,GE,RS,RT | No | PP |
| PUR halogen-free yellow | UGE | M12 | 3x0.34 mm² | yellow | BR,BL,SW | No | TPE |
| | UGE | M12 | 4x0.34 mm² | yellow | BR,WS,BL,SW | No | TPE |
| | UGE | M12 | 5x0.34 mm² | yellow | BR,WS,BL,SW,GR | No | TPE |
| PUR resistant to welding beads | T | M12 | 3x0.34 mm² | black | BR,BL,SW | Yes | TPE |
| | T | M12 | 4x0.34 mm² | black | BR,WS,BL,SW | Yes | TPE |
| | T | M12 | 5x0.34 mm² | black | BR,WS,BL,SW,GR | Yes | TPE |
| **M12 shielded** | | | | | | | |
| PUR halogen-free | U | M12 | 3x0.34 mm² | black | BR,BL,SW | No | TPE |
| | U | M12 | 4x0.34 mm² | black | BR,WS,BL,SW | No | TPE |
| | U | M12 | 5x0.34 mm² | black | BR,WS,BL,SW,GR | No | TPE |
| | U | M12 | 8x0.25 mm² | black | BR,WS,BL,GR,GN,GE,RS,RT | No | PP |
| **Data cables Universal Pro (SubBus)** | | | | | | | |
| PUR halogen-free | U-SB | M8 | 4x0.34 mm² | black | BR,WS,BL,SW | No | PP |
| TYPE A | C5AS4VG | M12 | 4xAWG 22 | green | WS,BL,OR,GE | No | PE |
| TYPE B | C5DS4VG | M12 | 4xAWG 22 | green | WS,BL,OR,GE | No | PE |
| TYPE C | C5DD4UG | M12/RJ45 | 4xAWG 22 | green | WS,BL,OR,GE | No | PE |
| **EtherCat** | | | | | | | |
| PUR halogen-free | UIE | M8 | 4x0.15 mm² | green | BL,OR,WSBL,WSOR | No | PP |
| **PROFIBUS DP** | | | | | | | |
| PUR halogen-free | D | M12 | 2x0.24 mm² | violet | RT, GN | No | TPE |
| PVC | E | M12 | 2x0.34 mm² | violet | RT, GN | No | PVC |
| **PROFIBUS PA** | | | | | | | |
| PVC | M | M12 | 2x1.0 mm² | black | RT, GN | No | PE |
| PVC | M | M12 | 2x1.0 mm² | blue | RT, GN | No | PE |
| **CANDeviceNet™** | | | | | | | |
| PUR halogen-free | A | M12 | 2x0.22 mm² + 2x0.34 mm² | black | WS,BL (0.22 mm²), RT,SW (0.34 mm²) | No | TPE |
| PVC | B | M12 | 2x0.22 mm² + 2x0.34 mm² | black | WS,BL (0.22mm²), RT,SW (0.34mm²) | No | PVC |
| **Note** | Additional technical data available upon request | | | | | | |

| Outer cladding | Suitable for dragline cable carriers | Bending radius in cable ∅ | | Temperature range in °C | | External-Ø in mm | Halogen-free | UL |
|---|---|---|---|---|---|---|---|---|
| | | Rigid | Moving | Rigid | Moving | | | |
| | | | | | | | | |
| PVC | No | 5x | 10x | -30 / +80 | -5 / +80 | approx. 4.5 | No | Yes |
| PVC | No | 5x | 10x | -30 / +80 | -5 / +80 | approx. 4.8 | No | Yes |
| PUR | Yes | 5x | 10x | -40 / +80 | -25 / +80 | approx. 4.1 | Yes | Yes |
| PUR | Yes | 5x | 10x | -40 / +80 | -25 / +80 | approx. 4.4 | Yes | Yes |
| PUR | Yes | 5x | 10x | -40 / +80 | -25 / +80 | approx. 4.1 | Yes | Yes |
| PUR | Yes | 5x | 10x | -40 / +80 | -25 / +80 | approx. 4.4 | Yes | Yes |
| PUR | Yes | 4x | 7.5x | -40 / +105 | -30 / +105 | approx. 4.9 | Yes | Yes |
| PUR | Yes | 4x | 7.5x | -40 / +105 | -30 / +105 | approx. 4.9 | Yes | Yes |
| | | | | | | | | |
| PUR | Yes | 5x | 12x | -40 / +90 | -30 / +90 | approx. 4.8 | Yes | Yes |
| PUR | Yes | 5x | 12x | -40 / +90 | -30 / +90 | approx. 5.1 | Yes | Yes |
| | | | | | | | | |
| PVC | nein | 5x | 10x | -30 / +80 | -5 / +80 | approx. 4.9 | No | Yes |
| PVC | nein | 5x | 10x | -30 / +80 | -5 / +80 | approx. 5.3 | No | Yes |
| PVC | nein | 5x | 10x | -30 / +80 | -5 / +80 | approx. 5.7 | No | Yes |
| PUR | Yes | 5x | 10x | -40 / +80 | -25 / +80 | approx. 4.3 | Yes | Yes |
| PUR | Yes | 5x | 10x | -40 / +80 | -25 / +80 | approx. 4.7 | Yes | Yes |
| PUR | Yes | 5x | 10x | -40 / +80 | -25 / +80 | approx. 5.0 | Yes | Yes |
| PUR | Yes | 5x | 10x | -40 / +90 | -30 / +90 | approx. 5.9 | Yes | Yes |
| PUR | Yes | 5x | 10x | -40 / +80 | -25 / +80 | approx. 4.3 | Yes | Yes |
| PUR | Yes | 5x | 10x | -40 / +80 | -25 / +80 | approx. 4.7 | Yes | Yes |
| PUR | Yes | 5x | 10x | -40 / +80 | -25 / +80 | approx. 5.0 | Yes | Yes |
| PUR | Yes | 4x | 7.5x | -40 / +105 | -30 / +105 | approx. 4.9 | Yes | Yes |
| PUR | Yes | 4x | 7.5x | -40 / +105 | -30 / +105 | approx. 4.9 | Yes | Yes |
| PUR | Yes | 4x | 7.5x | -40 / +105 | -30 / +105 | approx. 5.1 | Yes | Yes |
| | | | | | | | | |
| PUR | Yes | 5x | 10x | -40 / +80 | -25 / +80 | approx. 5.0 | Yes | Yes |
| PUR | Yes | 5x | 10x | -40 / +80 | -25 / +80 | approx. 5.4 | Yes | Yes |
| PUR | Yes | 5x | 10x | -40 / +80 | -25 / +80 | approx. 5.7 | Yes | Yes |
| PUR | Yes | 5x | 12x | -40 / +90 | -30 / +90 | approx. 6.3 | Yes | Yes |
| | | | | | | | | |
| | | | | | | | | |
| PUR | Yes | 5x | 12x | -40 / +90 | -30 / +90 | approx. 5.1 | Yes | Yes |
| PVC | No | 3.5x | 7.5x | -40 / +75 | -20 / +60 | approx. 6.5 | No | Yes |
| PVC | No | 3.5x | 7.5x | -40 / +70 | -20 / +60 | approx. 6.5 | No | Yes |
| PUR | Yes | 5x | 7.5x | -40 / +70 | -20 / +60 | approx. 6.5 | Yes | Yes |
| | | | | | | | | |
| PUR | Yes | 4x | 7.5x | -40 / +80 | -/- | approx. 4.8 | Yes | Yes |
| | | | | | | | | |
| PUR | Yes | 7.5x | 15x | -40 / +70 | -20 / +60 | approx. 7.8 | Yes | No |
| PVC | No | 18x | 9x | -20 / +70 | -5 / +60 | approx. 7.8 | No | No |
| | | | | | | | | |
| PVC | No | -/- | -/- | -30 / +80 | -5 / +60 | approx. 8.0 | No | No |
| PVC | No | -/- | -/- | -30 / +80 | -5 / +60 | approx. 8.0 | No | No |
| | | | | | | | | |
| PUR | Yes | 5x | 10x | -40 / +80 | -10 / +80 | approx. 7.0 | Yes | Yes |
| PVC | No | 5x | 10x | -40 / +80 | -10 / +80 | approx. 7.2 | No | Yes |

# Drilling templates

**SAI M12 and M12 Push-Pull: hood / M23 / M16 / fixed cable / IDC / A**

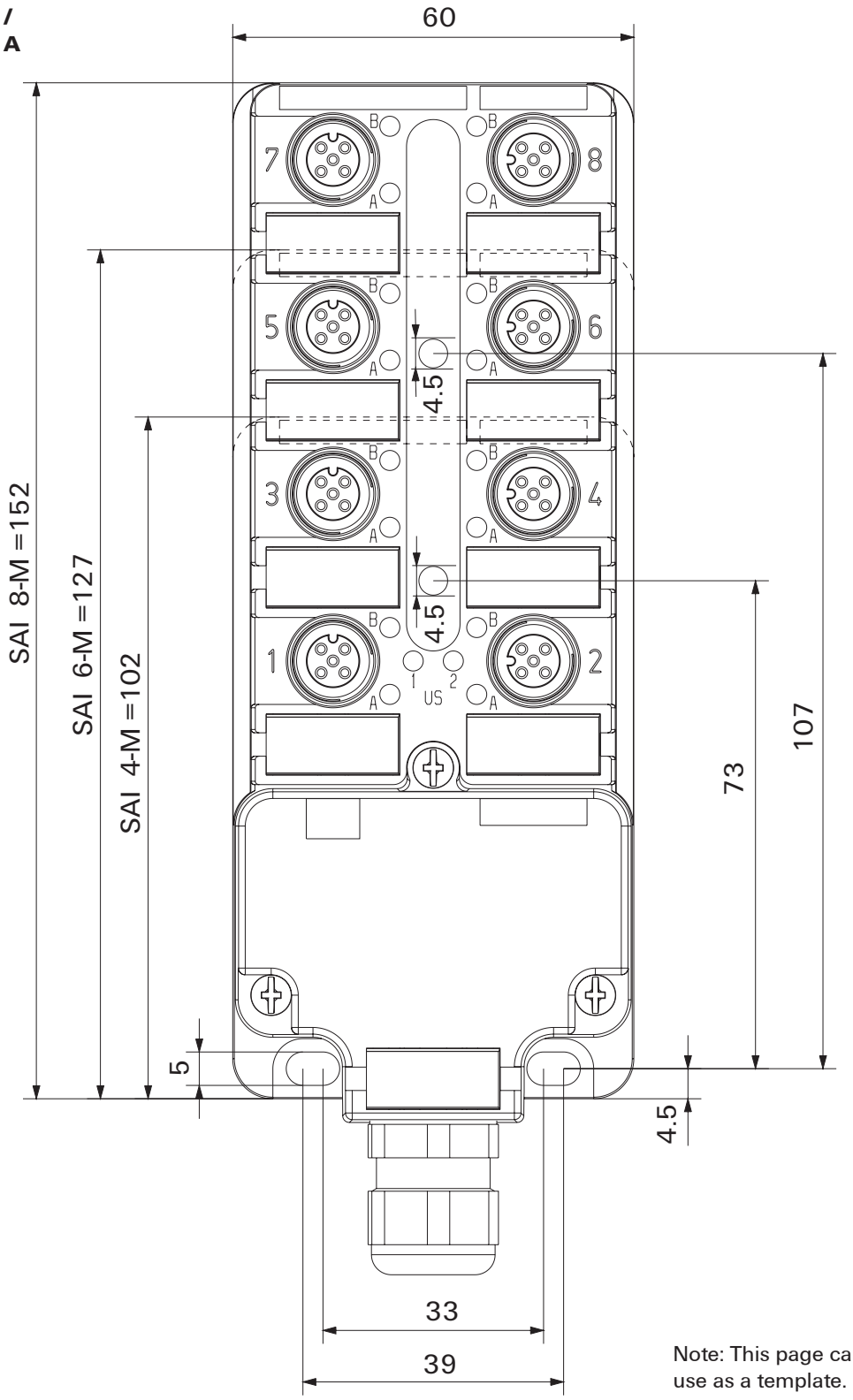


Note: This page can be copied to use as a template.

**SAI stainless steel**

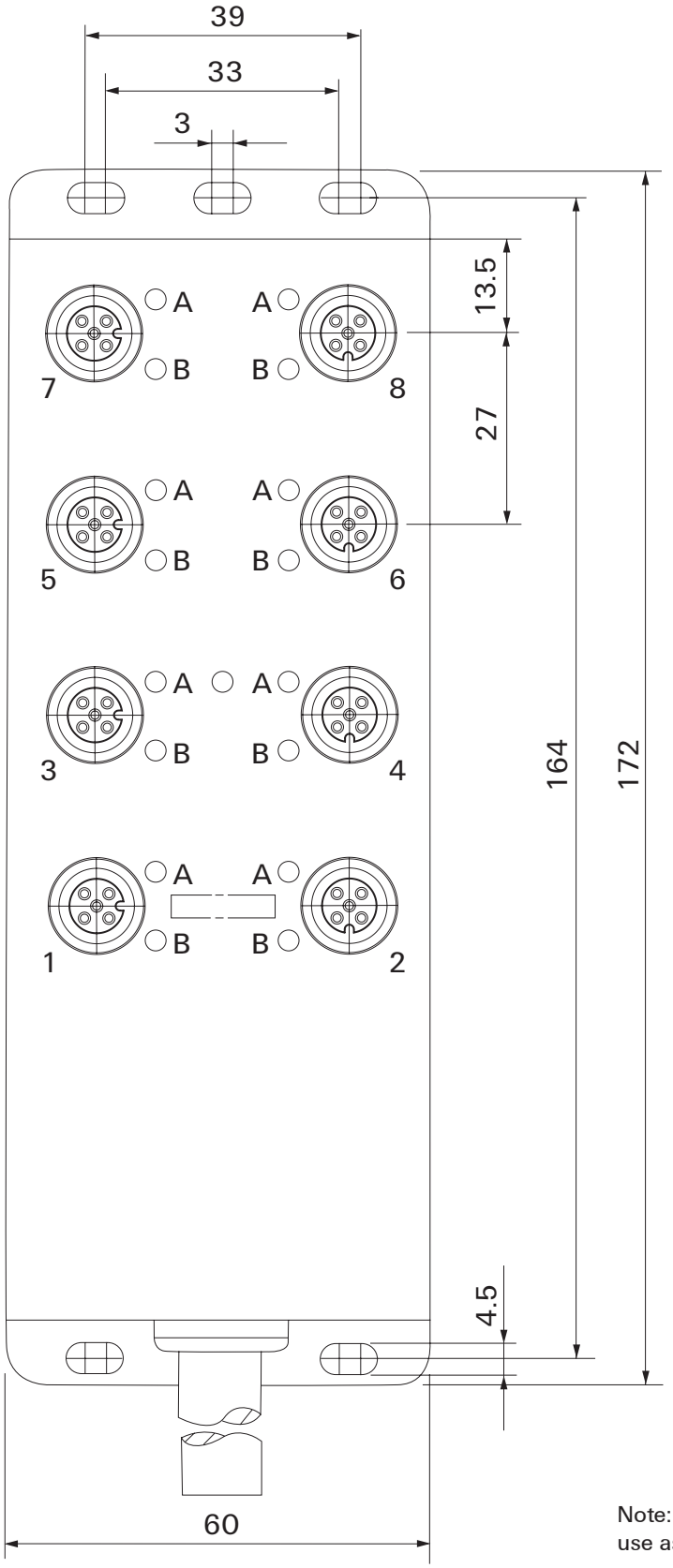


Note: This page can be copied to use as a template.

## SAI wall bushing

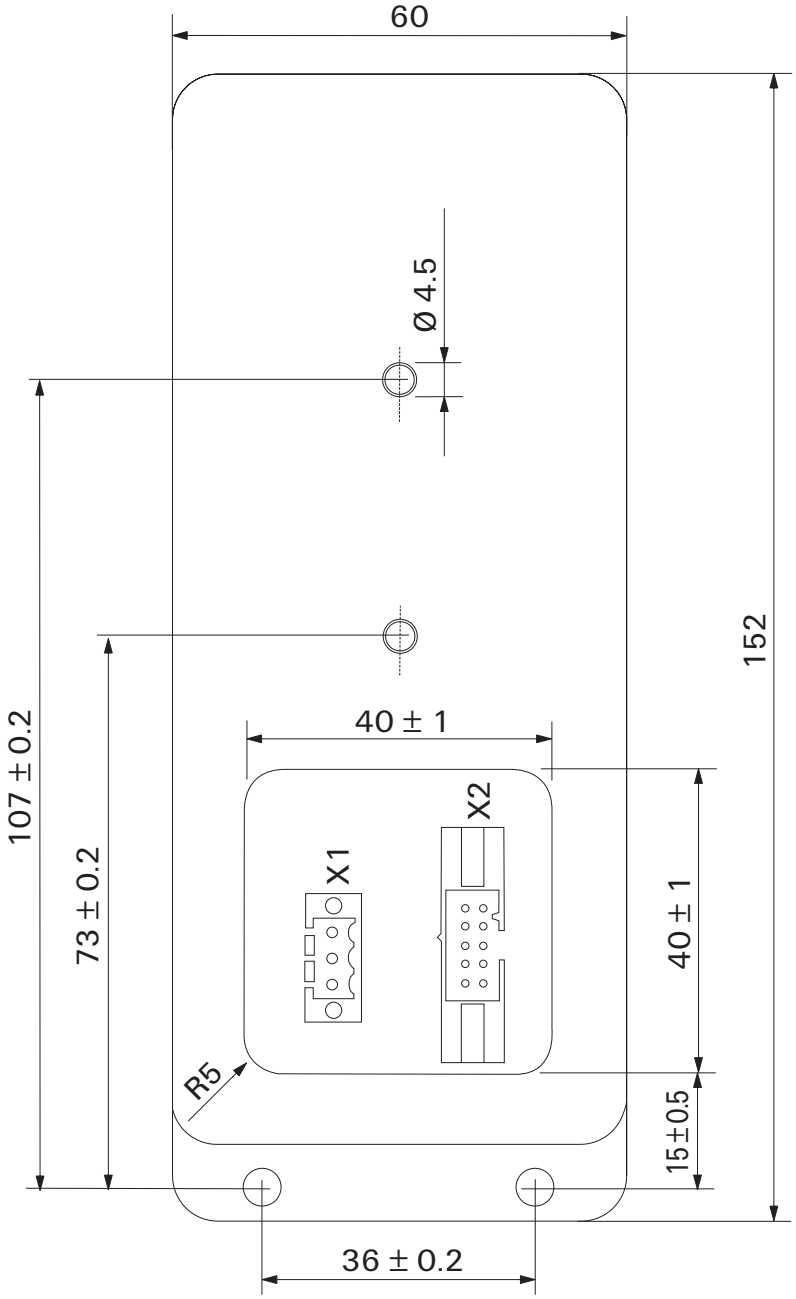


Note: This page can be copied to use as a template.

**SAI M8 standard**

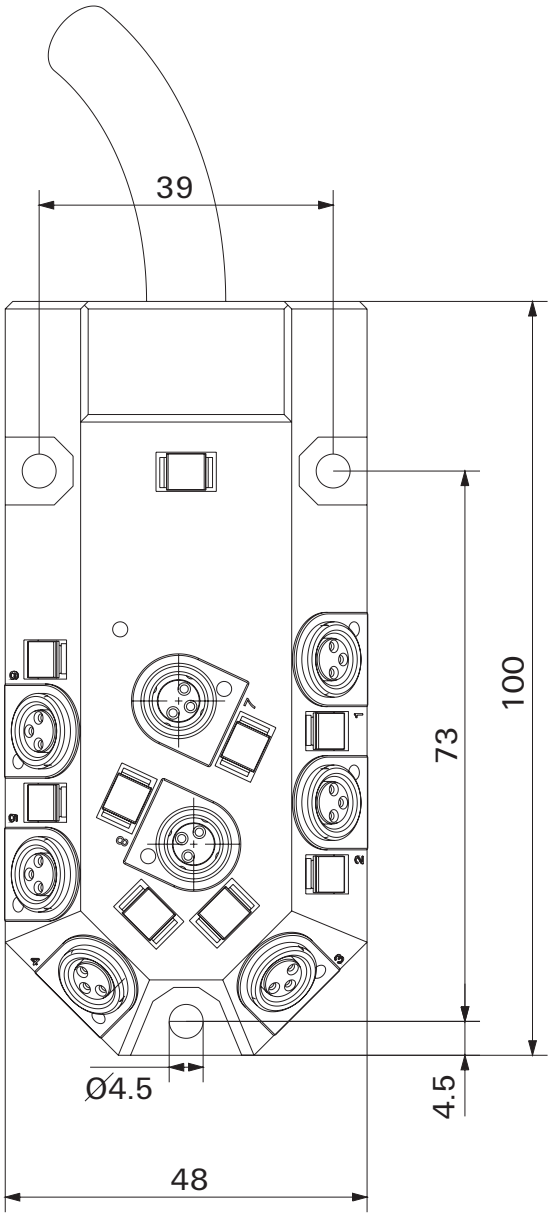




Note: This page can be copied to use as a template.

**SAI M8 line**

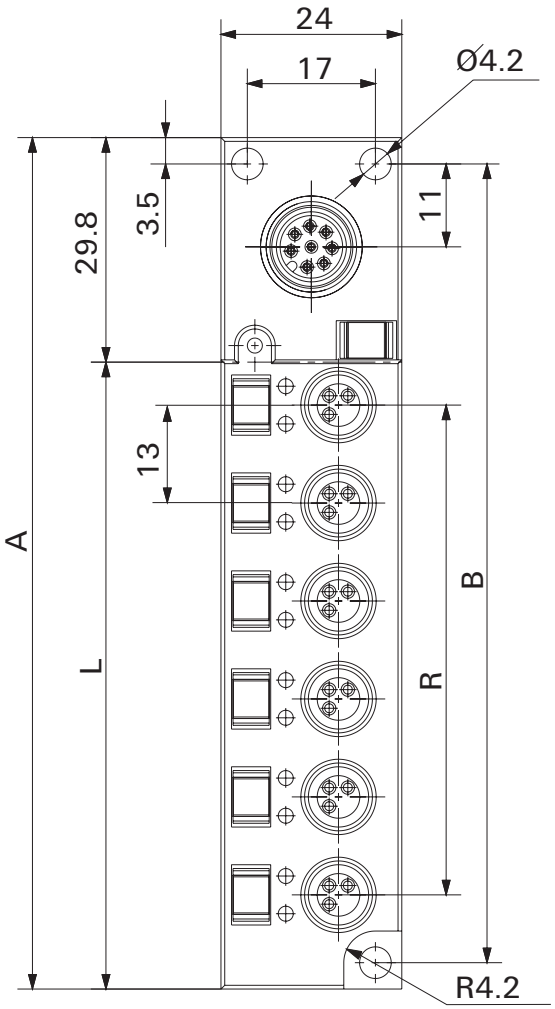


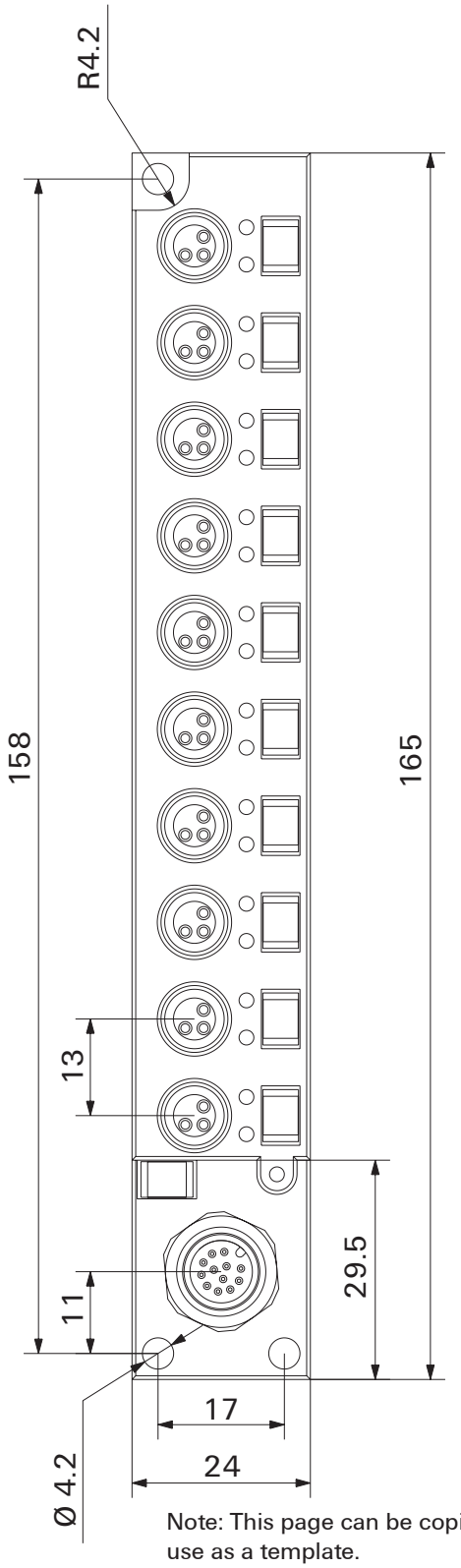


Note: This page can be copied to use as a template.

**SAI M5**

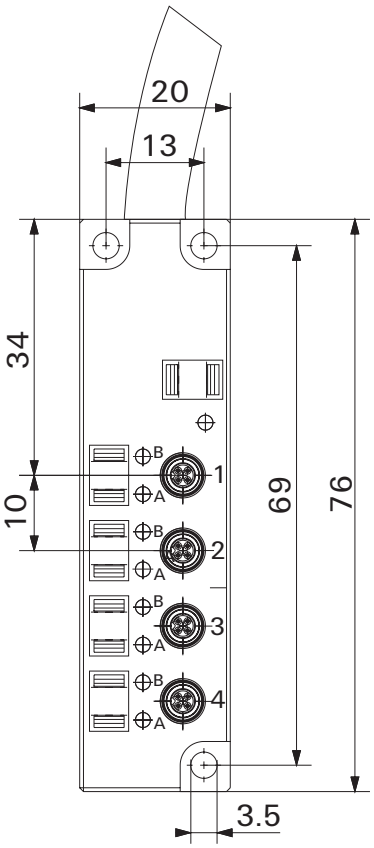


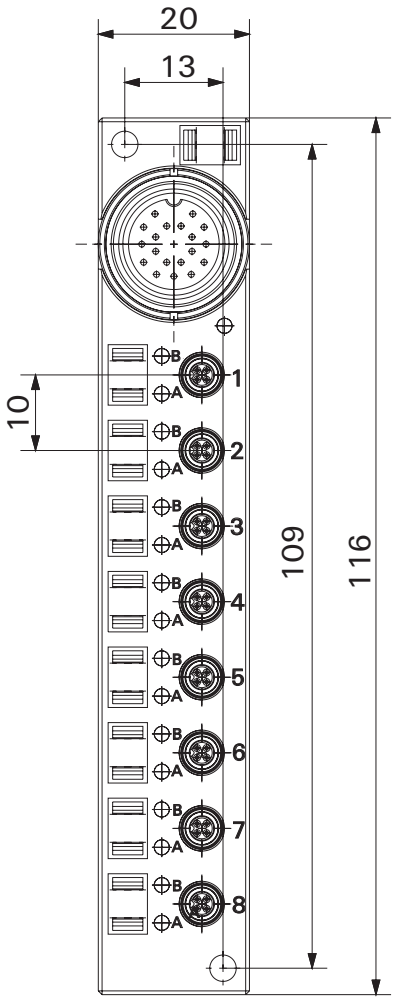




Note: This page can be copied to use as a template.

**SAI Active Universal**

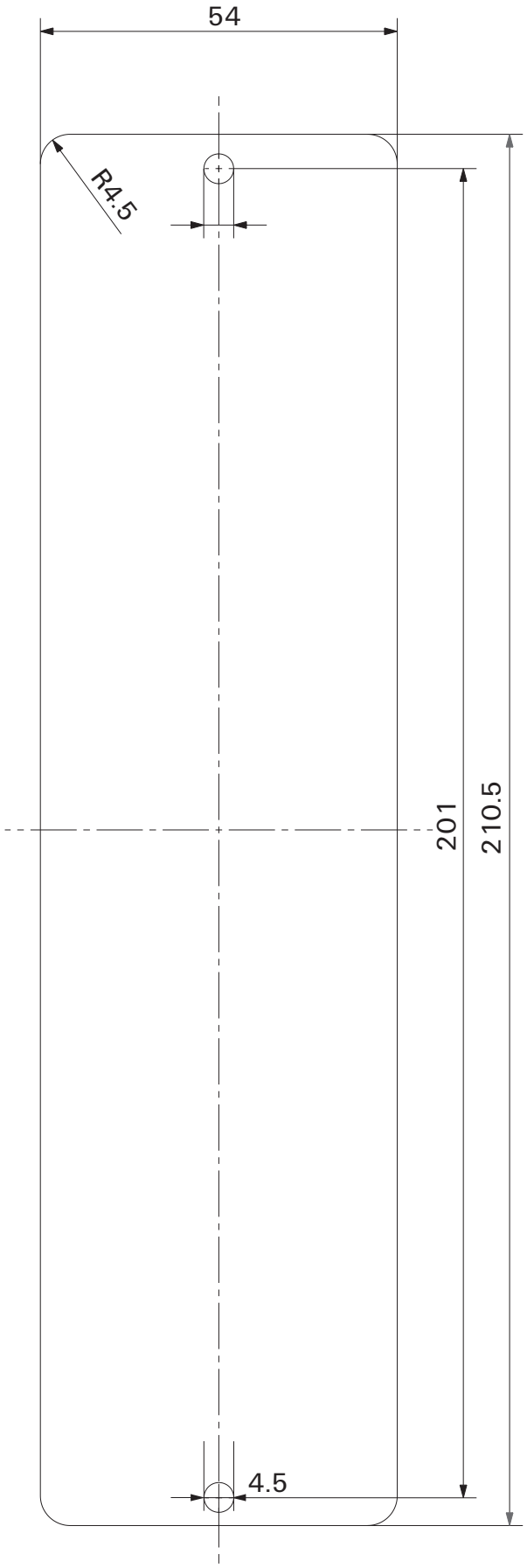


Note: This page can be copied to use as a template.

**SAI Active Universal Pro:**
**Subbus modules with digital outputs**

**Plan view**

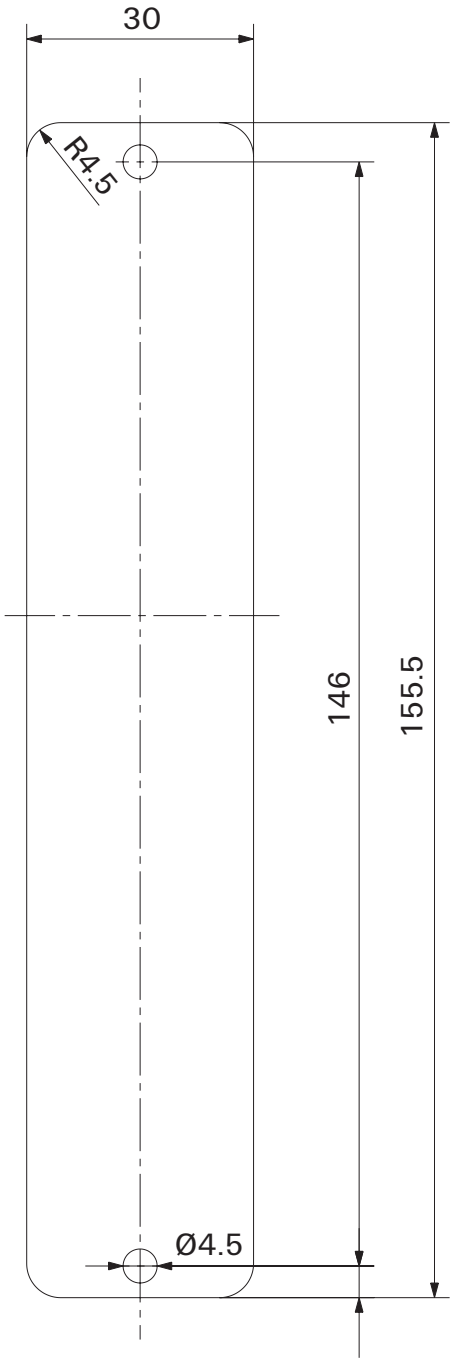


**Side view**

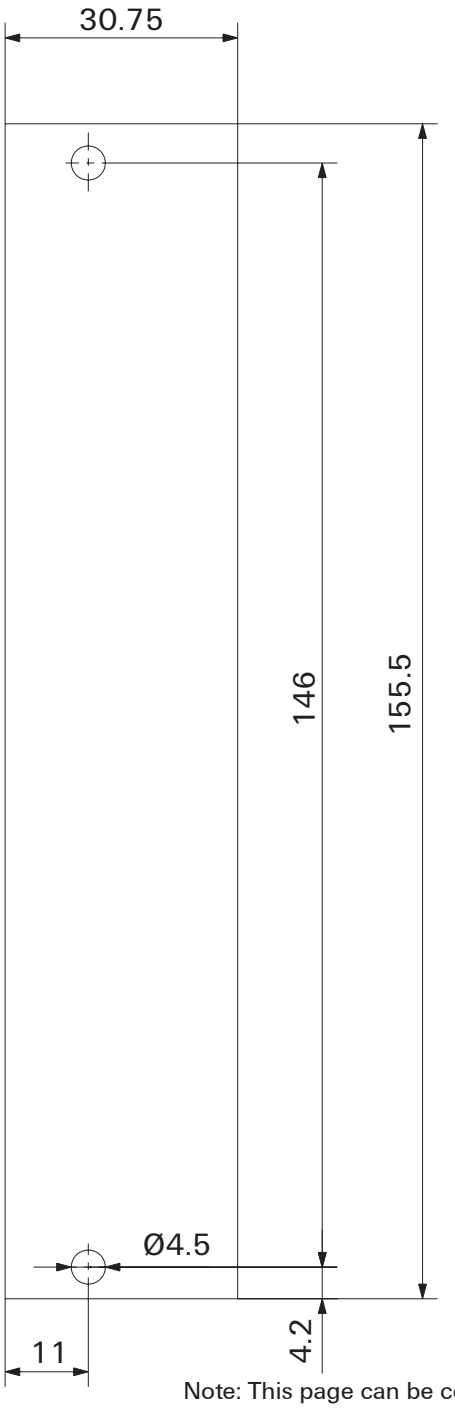


Note: This page can be copied to use as a template.

**SAI Active Universal Pro:**
**Sub-bus modules without digital outputs**

**Plan view**

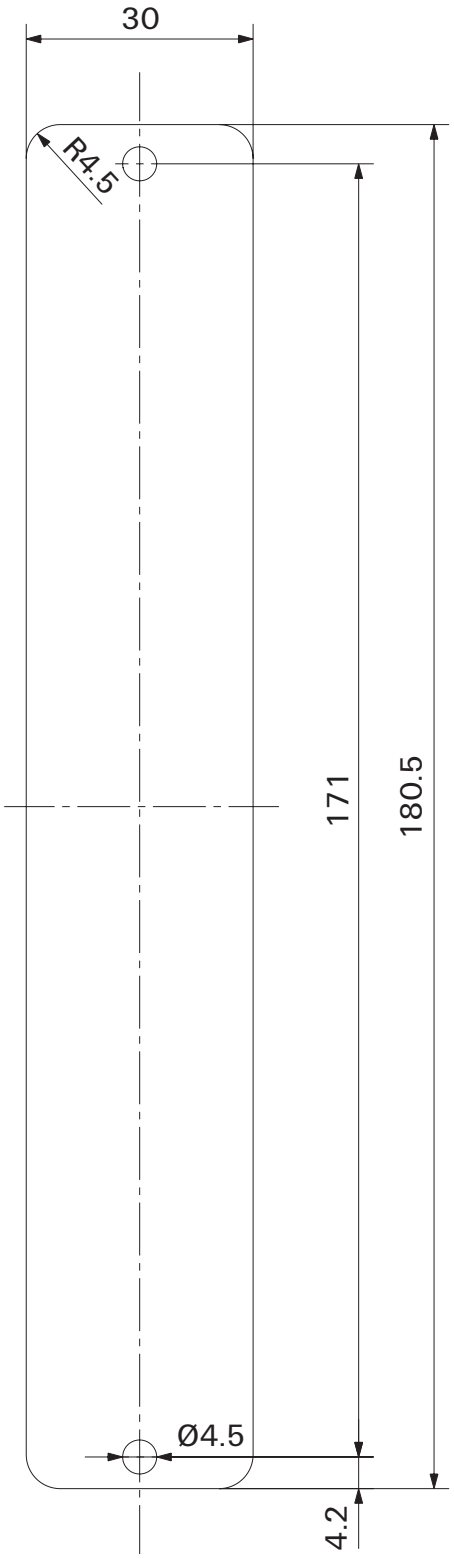


**Side view**

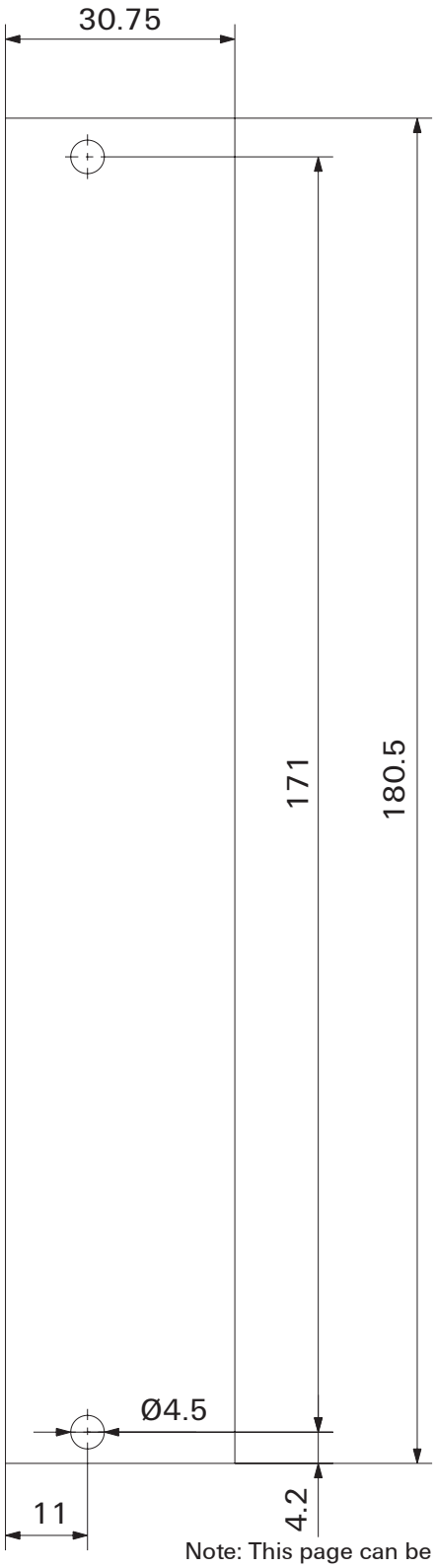


Note: This page can be copied to use as a template.

# Chemical resistance of nickel

The statements on the resistance of nickel to chemicals only apply when the coating is undamaged and is not subject to any mechanical loads. These statements are based on a review of the literature available and it should be noted that pure nickel is not considered in the literature – only alloyed nickel steels.

The statements on page W.15 are based on research, and once again please note that pure nickel has not been included in the testing. The findings in the research are based on undamaged alloyed nickel steels that have not been subject to any mechanical loads.

The six materials in question are:

| | |
|---|---|
| Chlorobenzene | 1 |
| Chloroform | 1 |
| Chromic acid hydride | 1 |
| Acetic acid | 1 |
| Hydrofluoric acid | 2 |
| Concentrated hydrochloric acid | 2 |

The findings for the two materials above marked with a “2” could have a critical impact on applications. The findings for the four materials marked with a “1” should be taken into account but would not be considered critical for applications.

A further advantage of nickel is its thermal stability. The resistance does not change up to a temperature of 120 °C.

Pure nickel:
Corrosion properties are determined by the resistance of the passive layer.

Good resistance in:
- water containing oxygen
- flowing seawater
- alkalis (very good resistance) even at high temperatures and high concentrations
- neutral and alkaline salt solutions (carbonates, phosphates, sulphates, chlorides and nitrates) even at high concentrations and temperatures

Known problems:
- corrosion attack in heavily oxidising acids and solutions containing chlorides
- in inorganic and organic acids only resistant in diluted solutions and at low temperatures
- coating is not toxic (formation of deposits by micro-organisms can lead to destruction of the passive coating)

# Chemical resistance of Pocan® (PBT)

Pocan® offers good resistance to chemicals. Organic solvents, such as aliphatic hydrocarbons, alcohols, ether, long-chain ester as well as fats, oils and perchlorinated hydrocarbons do not corrode Pocan®.

This is also true for water and aqueous solutions, neutral and acid salts, as well as diluted acids.

On the other hand, it is susceptible to alkalis, oxidising acids, ketones and phenols.

Susceptibility to universal alcohols, aromatics and ketones increases as the ambient temperature rises above 60 °C.

In the presence of water and aqueous solutions, hydrolytic degradation at higher temperatures increasingly leads to a decline in stability.

Substances like motor and transformer oils, petrol and brake fluids do not corrode Pocan®, even at higher temperatures.

| Medium | 23 °C | 60 °C |
|---|---|---|
| Acetic acid 10% | ± | ± |
| Acetone | + | - |
| Ammonia 10% | + | - |
| Ammonia, concentrated | ± | - |
| | | |
| Benzene | + | - |
| Brake fluid | + | + |
| Butane | + | + |
| Butanol | + | ± |
| Butyl acetate | + | + |
| | | |
| Calcium chloride 10% | + | + |
| Carbon disulphide | + | ± |
| Carbon tetrachloride | + | ± |
| Chlorobenzene | - | - |
| Chloroform | - | - |
| Chromic acid hydride 10% | + | + |
| Citric acid 10% | + | ± |
| Cresol | - | - |
| Curd soap | + | + |
| | | |
| Dibutyl phthalate | + | ± |
| Diesel oil | + | + |
| Diethyl ether | + | ± |
| Dioxan | + | - |
| | | |
| Ethanol | + | + |
| Ethyl acetate | ± | - |
| Ethyl dichloride | - | - |
| Ethylene glycol | + | ± |
| | | |
| Formic acid 10% | + | ± |
| Freon 11 | + | + |
| Frigen 113 | + | + |
| | | |
| Glacial acetic acid 10% | - | - |
| Glycerine | + | + |
| | | |
| Heptane | + | + |
| Hexane | + | + |
| Hydraulic oil | + | + |
| Hydrochloric acid 10% | + | - |
| Hydrochloric acid, concentrated | - | - |
| Hydrofluoric acid 10% | + | + |
| Hydrogen peroxide 20% | + | ± |
| | | |
| Isopropyl alcohol | + | ± |
| | | |
| Kerosene | + | + |

| Medium | 23 °C | 60 °C |
|---|---|---|
| Linseed oil | + | + |
| Lubricating greases | + | + |
| | | |
| Methanol | + | ± |
| Methyl ethyl ketone | + | ± |
| Methylene chloride | - | - |
| Mineral oils | + | + |
| Motor oils | + | + |
| | | |
| Nitric acid 10% | + | ± |
| Nitric acid, concentrated | - | - |
| | | |
| Octane | + | + |
| Olive oil | + | + |
| | | |
| Paraffin oil | + | + |
| Perchloroethylene | ± | - |
| Petrol, normal and lead-free | + | + |
| Petrol, super | + | + |
| Petrol/methanol 85/15 | + | + |
| Petroleum | + | + |
| Phenol 10% | - | - |
| Phosphoric acid 20% | + | ± |
| Potassium chloride 10% | + | + |
| Potassium dichromate 10% | + | + |
| Potassium hydroxide 10% | - | - |
| Potassium permanganate 10% | + | ± |
| | | |
| Soap suds 10% | + | ± |
| Sodium bisulphite 10% | + | + |
| Sodium carbonate 10% | + | + |
| Sodium chloride 10% | + | + |
| Sodium hydroxide 10% | - | - |
| Sulphuric acid 10% | + | ± |
| Sulphuric acid, concentrated | - | - |
| | | |
| Tetrahydrofuran | - | - |
| Toluene | ± | - |
| Transformer oil | + | + |
| Trichlorethene/chloroform 1/1 | ± | - |
| Turpentine oil | + | + |
| | | |
| Vegetable oils | + | + |
| | | |
| Washing liquid | + | + |
| Washing powder, synthetic | + | + |
| Water | + | + |
| | | |
| Xylol | ± | - |

The above values are for guidance only. A definite statement can only be made when based on the respective case in question.

+ = resistant
- = not resistant
± = partly resistant

# Index


| | | |
|---|---|---|
| **Index** | Index Type | X.2 |
| | Index Order No. | X.8 |
| | Addresses worldwide | X.16 |

| Type | Order No. | Page |
|---|---|---|
| **1-9** | | |
| 1/4" Handgriff | 4294820000 | K.5 |
| **A** | | |
| AIE multi-stripax 6-16 | 9202260000 | K.11 |
| AIE multi-stripax ASI | 9202300000 | K.11 |
| AIE multi-stripax GKWLW | 9205770000 | K.11 |
| AM 12 | 9030060000 | C.69 |
| AM 12 | 9030060000 | C.70 |
| AM 12 | 9030060000 | C.73 |
| AM 12 | 9030060000 | C.74 |
| AM 12 | 9030060000 | K.8 |
| AS-KG-GE | 9455110000 | C.60 |
| AS-KG-SW | 9455120000 | C.60 |
| **B** | | |
| B KOTR B M12 4POL D BU | 2350590000 | G.13 |
| B KOTR B M12 4POL D BU | 2350590000 | G.7 |
| B KOTR B M12 5POL A BU | 2350600000 | G.13 |
| B KOTR B M12 5POL A BU | 2350600000 | G.7 |
| B KOTR B M12 5POL A SF | 2350610000 | G.10 |
| B KOTR B M12 5POL A SF | 2350610000 | G.13 |
| B KOTR B M12 5POL A SF | 2350610000 | G.7 |
| B KOTR B M12 5POL B BU | 2350620000 | G.13 |
| B KOTR B M12 5POL B BU | 2350620000 | G.7 |
| B KOTR B M12 5POL B SF | 2350630000 | G.13 |
| B KOTR B M12 5POL B SF | 2350630000 | G.7 |
| B KOTR BUS M8 4POL BU | 2350640000 | G.10 |
| B KOTR BUS M8 4POL BU | 2350640000 | G.13 |
| B KOTR BUS M8 4POL BU | 2350640000 | G.7 |
| B KOTR BUS M8 4POL BU | 2350640000 | G.9 |
| B KOTR BUS M8 4POL SF | 2350650000 | G.10 |
| B KOTR BUS M8 4POL SF | 2350650000 | G.13 |
| B KOTR BUS M8 4POL SF | 2350650000 | G.9 |
| B KOTR M12 4P D BU SAI | 2341480000 | G.10 |
| B KOTR M12 4P D BU SAI | 2341480000 | G.13 |
| B KOTR M12 4P D BU SAI | 2341480000 | G.6 |
| B KOTR M12 4P D BU SAI | 2341480000 | G.9 |
| B KOTR M12 5P A BU SAI | 2326170000 | G.10 |
| B KOTR M12 5P A BU SAI | 2326170000 | G.13 |
| B KOTR M12 5P A BU SAI | 2326170000 | G.6 |
| B KOTR M12 5P A BU SAI | 2326170000 | G.9 |
| B KOTR M8 3P BU SAI | 2332380000 | G.13 |
| B KOTR M8 3P BU SAI | 2332380000 | G.7 |
| BL 3.50/07/180 SN DKGN BX | 1606530000 | I.43 |
| **D** | | |
| DAE M12 PA short | 1868560000 | C.81 |
| DEK 5/5 MC BEDRUCKT | 1609810000 | K.16 |
| DEK 5/5 MC-10 NEUT. WS | 1609801044 | K.16 |
| **E** | | |
| ERAN MULTI-STRIPAX | 9203100000 | K.11 |
| ERME 10² SPX 4 | 1119030000 | K.9 |
| ERME MULTI-STRIPAX | 9203070000 | K.11 |
| ESG 8/13.5/43.3 SAI AU | 1912130000 | F.10 |
| ESG 8/13.5/43.3 SAI AU | 1912130000 | F.14 |
| ESG 8/13.5/43.3 SAI AU | 1912130000 | F.18 |
| ESG 8/13.5/43.3 SAI AU | 1912130000 | F.23 |
| ESG 8/13.5/43.3 SAI AU | 1912130000 | F.25 |
| ESG 8/13.5/43.3 SAI AU | 1912130000 | F.27 |
| ESG 8/13.5/43.3 SAI AU | 1912130000 | F.37 |
| ESG 8/13.5/43.3 SAI AU | 1912130000 | K.16 |
| ESG 9/20 MC NEUTRAL WS | 1609940000 | K.16 |
| **F** | | |
| FBC PA M12 FM 1M | 1785110100 | C.28 |
| FBC PA M12 FMA 1M | 1076530100 | C.28 |
| FBC PA M12 M 1M | 1785120100 | C.28 |
| FBC PA M12 M-FM 1M | 1785100100 | C.29 |
| FBC PA M12 M-FMA 1M | 1075620100 | C.29 |
| FBC PA M12 MA 1M | 1076540100 | C.28 |
| FBC PA M12 MA-FM 1M | 1075460100 | C.29 |
| FBC PA M12 MA-FMA 1M | 1076550100 | C.29 |
| FBCEX PA M12 FM 1M | 1785140100 | C.28 |
| FBCEX PA M12 FMA 1M | 1076520100 | C.28 |
| FBCEX PA M12 M 1M | 1785150100 | C.28 |
| FBCEX PA M12 M-FM 1M | 1785130100 | C.29 |
| FBCEX PA M12 M-FMA 1M | 1075390100 | C.29 |
| FBCEX PA M12 MA 1M | 1076580100 | C.28 |
| FBCEX PA M12 MA-FM 1M | 1075450100 | C.29 |
| FBCEX PA M12 MA-FMA 1M | 1075410100 | C.29 |
| FBCon DP CG 1way | 8564340000 | C.23 |
| FBCon DP CG Term 24V | 8564290000 | C.24 |
| FBCon DP M12 1way | 8564350000 | C.23 |
| FBCon DP M12 Term 24V | 8564330000 | C.24 |
| FBCon M12 4P FM EMC | 8426220000 | C.32 |
| FBCon M12 4P FM EMC | 8426220000 | D.15 |
| FBCon M12 4P FM EMC | 8426220000 | D.5 |
| FBCon M12 4P M EMC | 9455640000 | C.32 |
| FBCon M12 4P M EMC | 9455640000 | D.15 |
| FBCon M12 4P M EMC | 9455640000 | D.5 |
| FBCon PA CG 1way | 8564090000 | C.36 |
| FBCon PA CG 1way Ex | 8564180000 | C.52 |
| FBCon PA CG 1way Limiter | 8714200000 | C.45 |
| FBCon PA CG 1way OVP | 8714120000 | C.41 |
| FBCon PA CG 2way | 8564100000 | C.37 |
| FBCon PA CG 2way Ex | 8564190000 | C.53 |
| FBCon PA CG 2way Limiter | 8714210000 | C.46 |
| FBCon PA CG 2way OVP | 8714130000 | C.42 |
| FBCon PA CG 4way | 8564110000 | C.38 |
| FBCon PA CG 4way Ex | 8564200000 | C.54 |
| FBCon PA CG 4way Limiter | 8714220000 | C.47 |
| FBCon PA CG 4way OVP | 8714140000 | C.43 |
| FBCon PA CG 8way | 8564300000 | C.39 |
| FBCon PA CG 8way Ex | 8564240000 | C.55 |
| FBCon PA CG 8way Limiter | 8714230000 | C.48 |
| FBCon PA CG 8way OVP | 8714150000 | C.44 |
| FBCon PA CG/M12 1way | 8564060000 | C.36 |
| FBCon PA CG/M12 1way Ex | 8564150000 | C.52 |
| FBCon PA CG/M12 1way Limiter | 8714160000 | C.45 |
| FBCon PA CG/M12 1way OVP | 8714080000 | C.41 |
| FBCon PA CG/M12 2way | 8564070000 | C.37 |
| FBCon PA CG/M12 2way Ex | 8564160000 | C.53 |
| FBCon PA CG/M12 2way Limiter | 8714170000 | C.46 |
| FBCon PA CG/M12 2way OVP | 8714090000 | C.42 |
| FBCon PA CG/M12 4way | 8564080000 | C.38 |
| FBCon PA CG/M12 4way Ex | 8564170000 | C.54 |
| FBCon PA CG/M12 4way Limiter | 8714180000 | C.47 |
| FBCon PA CG/M12 4way OVP | 8714100000 | C.43 |
| FBCon PA CG/M12 8way | 8564310000 | C.39 |
| FBCon PA CG/M12 8way Ex | 8564250000 | C.55 |
| FBCon PA CG/M12 8way Limiter | 8714190000 | C.48 |
| FBCon PA CG/M12 8way OVP | 8714110000 | C.44 |
| FBCon SS CG 1way | 8703430000 | C.36 |
| FBCon SS CG 4way | 8703450000 | C.38 |
| FBCon SS CG 8way | 8703470000 | C.39 |
| FBCon SS CG/M12 1way | 8726020000 | C.36 |
| FBCon SS CG/M12 4way | 8726040000 | C.38 |
| FBCon SS CG/M12 8way | 8726050000 | C.39 |
| FBCon SS DP M12 1way | 8714270000 | C.23 |
| FBCon SS DP M12 Term 24V | 8714250000 | C.24 |
| FBCon SS DP PCG 1way | 8714260000 | C.23 |
| FBCon SS DP PCG Term 24V | 8714240000 | C.24 |
| FBCon SS PCG 1way | 8613670000 | C.36 |
| FBCon SS PCG 1way Limiter | 8726110000 | C.45 |
| FBCon SS PCG 1way OVP | 8715270000 | C.41 |
| FBCon SS PCG 4way | 8613680000 | C.38 |
| FBCon SS PCG 4way Limiter | 8715260000 | C.47 |
| FBCon SS PCG 4way OVP | 8726080000 | C.43 |
| FBCon SS PCG 8way | 8640720000 | C.39 |
| FBCon SS PCG 8way Limiter | 8726160000 | C.48 |
| FBCon SS PCG 8way OVP | 8726090000 | C.44 |
| FBCon Term.D Ex | 8606190000 | C.56 |
| FBCon Term.D Ex FM | 8556460000 | C.56 |
| FBCon Term.D Ex FM/PEAN | 8606180000 | C.56 |
| FBCon Term.D Ex PEAN | 8606200000 | C.56 |
| **G** | | |
| GWDR M16-NP | 1736230000 | C.81 |
| GWHUE BUS M12 BU SAI | 4322750000 | G.7 |
| GWHUE BUS M12 SF SAI | 4322760000 | G.7 |
| **I** | | |
| IE-C5DB4RE0015MCAMCA-E | 1059970015 | C.75 |
| IE-C5DB4RE0015MCAXXX-X | 1059900015 | C.76 |
| IE-C5DB4RE0015MCSMCA-E | 1059940015 | C.75 |
| IE-C5DB4RE0015MCSMCS-E | 1010850015 | C.73 |
| IE-C5DB4RE0030MCAMCA-E | 1059970030 | C.75 |
| IE-C5DB4RE0030MCAXXX-X | 1059900030 | C.76 |
| IE-C5DB4RE0030MCSMCA-E | 1059940030 | C.75 |
| IE-C5DB4RE0030MCSMCS-E | 1010850030 | C.73 |
| IE-C5DB4RE0050MCAMCA-E | 1059970050 | C.75 |
| IE-C5DB4RE0050MCAXXX-X | 1059900050 | C.76 |
| IE-C5DB4RE0050MCSMCA-E | 1059940050 | C.75 |
| IE-C5DB4RE0050MCSMCS-E | 1010850050 | C.73 |
| IE-C5DB4RE0050MSSMCS-E | 1059340050 | C.73 |
| IE-C5DB4RE0100MCAMCA-E | 1059970100 | C.75 |
| IE-C5DB4RE0100MCAXXX-X | 1059900100 | C.76 |
| IE-C5DB4RE0100MCSMCA-E | 1059940100 | C.75 |
| IE-C5DB4RE0100MCSMCS-E | 1010850100 | C.73 |
| IE-C5DB4RE0100MCSXXX-X | 1010840100 | C.74 |
| IE-C5DB4RE0100MSSMCS-E | 1059340100 | C.73 |
| IE-C5DD4UG0005MCSMCS-E | 1025950005 | C.69 |
| IE-C5DD4UG0010MCSA20-E | 1044470010 | C.70 |
| IE-C5DD4UG0015MCAMCA-E | 1059890015 | C.71 |
| IE-C5DD4UG0015MCAXXX-X | 1059750015 | C.72 |
| IE-C5DD4UG0015MCSA20-E | 1044470015 | C.70 |
| IE-C5DD4UG0015MCSMCA-E | 1059770015 | C.71 |
| IE-C5DD4UG0015MCSMCS-E | 1025950015 | C.69 |
| IE-C5DD4UG0015MCSXXX-X | 1025940015 | C.70 |
| IE-C5DD4UG0030MCAMCA-E | 1059890030 | C.71 |
| IE-C5DD4UG0030MCAXXX-X | 1059750030 | C.72 |
| IE-C5DD4UG0030MCSA20-E | 1044470030 | C.70 |
| IE-C5DD4UG0030MCSMCA-E | 1059770030 | C.71 |
| IE-C5DD4UG0030MCSMCS-E | 1025950030 | C.69 |
| IE-C5DD4UG0030MCSXXX-X | 1025940030 | C.70 |
| IE-C5DD4UG0050MCAMCA-E | 1059890050 | C.71 |
| IE-C5DD4UG0050MCAXXX-X | 1059750050 | C.72 |
| IE-C5DD4UG0050MCSA20-E | 1044470050 | C.70 |
| IE-C5DD4UG0050MCSMCA-E | 1059770050 | C.71 |
| IE-C5DD4UG0050MCSMCS-E | 1025950050 | C.69 |
| IE-C5DD4UG0050MCSXXX-X | 1025940050 | C.70 |
| IE-C5DD4UG0100MCAMCA-E | 1059890100 | C.71 |
| IE-C5DD4UG0100MCAXXX-X | 1059750100 | C.72 |
| IE-C5DD4UG0100MCSA20-E | 1044470100 | C.70 |
| IE-C5DD4UG0100MCSMCA-E | 1059770100 | C.71 |
| IE-C5DD4UG0100MCSMCS-E | 1025950100 | C.69 |
| IE-C5DD4UG0100MCSXXX-X | 1025940100 | C.70 |
| IE-CST | 9204350000 | C.69 |
| IE-CST | 9204350000 | C.70 |
| IE-CST | 9204350000 | C.73 |
| IE-CST | 9204350000 | C.74 |
| IE-PCB-M12X-S-180 | 1324010000 | C.79 |
| IE-PCB2-M12X-S-180 | 1393080000 | C.79 |
| IE-PS-M12X-P-FH | 1324020000 | C.79 |
| **J** | | |
| JP CLIP M | 8778490000 | H.7 |
| JP TEST | 8794120000 | H.6 |
| JPP NPN PNP 24VDC | 8852350000 | H.5 |
| JPP PNP NPN 24VDC | 8857030000 | H.5 |
| JPR 24VDC 1CO M12 | 8771420000 | H.3 |
| JPR 24VDC ISO 1CO M12 | 8771430000 | H.3 |
| JPTA 50MS 24VDC PNP M12 | 8771440000 | H.4 |
| JPTA100MS 24VDC PNP M12 | 8836630000 | H.4 |
| **K** | | |
| KT 12 | 9002660000 | K.7 |
| KT 8 | 9002650000 | K.7 |
| **M** | | |
| multi-stripax 6-16 | 9202210000 | K.11 |
| multi-stripax ASI | 9202250000 | K.11 |
| multi-stripax GKW LW | 9205760000 | K.11 |
| **P** | | |
| PB SUB-D IDC TERM PS | 1919680000 | C.15 |
| PB SUB-D ZF TERM PS | 1934200000 | C.15 |
| PB-DP SUB-D | 8395500000 | C.14 |
| PB-DP SUB-D M12 TERM | 1140650000 | C.16 |
| PB-DP SUB-D M12 TERM PS | 1140640000 | C.17 |
| PB-DP SUB-D TERM | 8460860000 | C.15 |
| PB-DP SUB-D ZF | 1161890000 | C.20 |
| PB-DP SUB-D ZF TERM | 1161870000 | C.21 |
| PB-DP SUB-D ZF TERM PS | 1161880000 | C.21 |
| PB-DP SUB-D ZF35TERM | 1173220000 | C.18 |
| PB-DP SUB-D ZF35TERM PS | 1173240000 | C.19 |
| PJ PRO TINTENSET FARBE | 1027110000 | K.15 |
| PJ PRO TNAW | 1024140000 | K.15 |
| PJ PRO TNTK INK C | 1027050000 | K.15 |
| PJ PRO TNTK INK K | 1027040000 | K.15 |
| PJ PRO TNTK INK M | 1027060000 | K.15 |
| PJ PRO TNTK INK Y | 1027070000 | K.15 |
| POS-4P M12 M20 150mm | 8425930000 | C.33 |
| POS-4P M12 M20 300mm | 8425940000 | C.33 |
| POS-4P M12 PG13,5 150mm | 9455650000 | C.33 |
| POS-4P M12 PG13,5 300 mm | 8425910000 | C.33 |
| POS-5P M12 M20 300mm | 1795500000 | C.33 |
| PRINTJET PRO 115V | 1024050000 | K.15 |
| PTSC 25X12 WN5452 | 4311430000 | G.10 |
| PTSC 25X12 WN5452 | 4311430000 | G.6 |
| PTSC 25X12 WN5452 | 4311430000 | G.9 |
| **R** | | |
| RS PB-DP T | 8800040000 | C.25 |
| RS PB-DP T SUB-D | 8788580000 | C.25 |
| **S** | | |
| SAI AD 54 | 1966170000 | G.13 |
| SAI AD 54 | 1966170000 | G.6 |
| SAI BFSC M3x10 | 1966180000 | G.13 |
| SAI BFSC M3x10 | 4310920000 | G.13 |
| SAI BFSC M3x10 | 4310920000 | G.6 |
| SAI BP 30 SB KU | 1246840000 | G.9 |
| SAI BP 30 SB LA | 1246710000 | G.10 |
| SAI BP 54 KU | 1966190000 | G.13 |
| SAI BP 54 KU | 1966190000 | G.6 |
| SAI GHDE 30 S KU M12 | 1246810000 | G.9 |
| SAI GHDE 30 S KU M8 | 1246830000 | G.9 |
| SAI GHDE 30 S KU SI | 1246820000 | G.9 |
| SAI GHDE 30 SB LA M12 | 1246670000 | G.10 |
| SAI GHDE 30 SB LA M8 | 1246690000 | G.10 |
| SAI GHDE 30 SB LA SIBL | 1246680000 | G.10 |
| SAI GHDE 3M12 1M8 SAI | 1246540000 | G.8 |
| SAI GHDE 3M12 1PG9 | 1246610000 | G.13 |
| SAI GHDE 3M12 1S2B | 1246550000 | G.8 |
| SAI GHDE 4M12 1S3B | 1246560000 | G.6 |
| SAI GHDE 4M12 2S2B | 1246570000 | G.8 |
| SAI GHDE 4M12 2X1S1B | 1246580000 | G.8 |
| SAI GHDE 4M12 3S1B | 1246590000 | G.8 |
| SAI GHDE EA 16M8 0.SIBL | 1246520000 | G.6 |
| SAI GHDE EA 8M12 | 1246490000 | G.6 |
| SAI GHDE EA 8M12 SIBL | 1246510000 | G.6 |
| SAI JP 4P LG | 1915220000 | H.8 |
| SAI JP 4P LG 100 | 8794090000 | H.8 |
| SAI JP 5P LG | 1918520000 | H.8 |
| SAI JP 5P LG 100 | 8794080000 | H.8 |
| SAI M23 CRIMPING TOOL 1 | 1203840000 | K.12 |
| SAI M23 CRIMPING TOOL 2 | 1203960000 | K.13 |
| SAI O-RI 5.0X0.8 NBR | 4312340000 | G.10 |
| SAI O-RI 5.0X0.8 NBR | 4312340000 | G.13 |
| SAI O-RI 5.0X0.8 NBR | 4312340000 | G.6 |
| SAI O-RI 5.0X0.8 NBR | 4312340000 | G.9 |
| SAI O-RI 7.5X1.5 VI | 4311000000 | G.10 |
| SAI O-RI 7.5X1.5 VI | 4311000000 | G.13 |
| SAI O-RI 7.5X1.5 VI | 4311000000 | G.6 |
| SAI O-RI 7.5X1.5 VI | 4311000000 | G.9 |
| SAI RA 30 SB KU | 1246660000 | G.9 |
| SAI RA 30 SB LA | 1246720000 | G.10 |
| SAI RA 54 KU | 1246530000 | G.6 |
| SAI Y-4S M8-M8 | 1805660000 | D.28 |
| SAI-10-F 3P M8 L 10M | 1828650000 | I.54 |
| SAI-10-F 3P M8 L 5M | 1828660000 | I.54 |
| SAI-10-S12 3P M8 L | 1877950000 | I.52 |
| SAI-12-F 3P M8 L 10M | 1828630000 | I.54 |
| SAI-12-F 3P M8 L 5M | 1828640000 | I.54 |
| SAI-4 M 4P M12 UT | 1705921000 | I.7 |
| SAI-4-F 3P IDC PUR 10M | 1766730000 | I.29 |
| SAI-4-F 3P IDC PUR 5M | 1766720000 | I.29 |
| SAI-4-F 3P M5 L10M | 1845820000 | I.58 |
| SAI-4-F 3P M5 L5M | 1851740000 | I.58 |
| SAI-4-F 3P M8 L 10M | 1828710000 | I.54 |
| SAI-4-F 3P M8 L 5M | 1828720000 | I.54 |
| SAI-4-F 3P M8 PUR 10M | 1784630000 | I.50 |
| SAI-4-F 3P M8 PUR 5M | 1784640000 | I.50 |
| SAI-4-F 4P FC 10M | 1848050000 | I.19 |
| SAI-4-F 4P FC 2M | 1848080000 | I.19 |
| SAI-4-F 4P FC 5M | 1848060000 | I.19 |
| SAI-4-F 4P IDC PUR 10M | 1766670000 | I.29 |
| SAI-4-F 4P IDC PUR 5M | 1766660000 | I.29 |
| SAI-4-F 4P M12 L 10M | 1070660000 | I.9 |
| SAI-4-F 4P M12 L 5M | 1070650000 | I.9 |
| SAI-4-F 4P M5 L10M | 1845800000 | I.58 |
| SAI-4-F 4P M5 L5M | 1851770000 | I.58 |
| SAI-4-F 4P M8 L 10M | 1849690000 | I.54 |
| SAI-4-F 4P M8 L 5M | 1849680000 | I.54 |
| SAI-4-F 4P M8 PUR 10M | 1784590000 | I.50 |
| SAI-4-F 4P M8 PUR 5M | 1784600000 | I.50 |
| SAI-4-F 4P PUR 10M | 9456200000 | I.6 |
| SAI-4-F 4P PUR 10M | 9456200000 | I.8 |
| SAI-4-F 4P PUR 15M | 9456210000 | I.6 |
| SAI-4-F 4P PUR 15M | 9456210000 | I.8 |
| SAI-4-F 4P PUR 20M | 9456230000 | I.6 |
| SAI-4-F 4P PUR 20M | 9456230000 | I.8 |
| SAI-4-F 4P PUR 3M | 9456180000 | I.8 |
| SAI-4-F 4P PUR 5M | 9456190000 | I.6 |
| SAI-4-F 4P PUR 5M | 9456190000 | I.8 |
| SAI-4-F 5P CNOMO 10M | 1861560000 | I.23 |
| SAI-4-F 5P CNOMO 5M | 1861570000 | I.23 |
| SAI-4-F 5P FC 10M | 1847930000 | I.19 |
| SAI-4-F 5P FC 2M | 1847940000 | I.19 |
| SAI-4-F 5P FC 5M | 1847950000 | I.19 |
| SAI-4-F 5P M12 L 10M | 1070640000 | I.9 |
| SAI-4-F 5P M12 L 5M | 1070630000 | I.9 |
| SAI-4-F 5P PUR 10M | 9456340000 | I.6 |
| SAI-4-F 5P PUR 10M | 9456340000 | I.8 |
| SAI-4-F 5P PUR 15M | 9456350000 | I.6 |
| SAI-4-F 5P PUR 15M | 9456350000 | I.8 |
| SAI-4-F 5P PUR 20M | 9456370000 | I.6 |
| SAI-4-F 5P PUR 20M | 9456370000 | I.8 |
| SAI-4-F 5P PUR 3M | 9456320000 | I.8 |
| SAI-4-F 5P PUR 5M | 9456330000 | I.6 |
| SAI-4-F 5P PUR 5M | 9456330000 | I.8 |
| SAI-4-FMM-4P M12 10M | 9456200002 | I.33 |
| SAI-4-FMM-4P M12 10M | 9456200002 | I.34 |
| SAI-4-FMM-4P M12 10M | 9456200002 | I.6 |
| SAI-4-FMM-4P M12 5M | 9456190002 | I.33 |
| SAI-4-FMM-4P M12 5M | 9456190002 | I.34 |
| SAI-4-FMM-4P M12 5M | 9456190002 | I.6 |
| SAI-4-M 3P IDC | 1760040000 | I.28 |
| SAI-4-M 3P IDC UT | 1760041000 | I.28 |
| SAI-4-M 3P M8 | 1784680000 | I.50 |
| SAI-4-M 4P Exi Z1 IL | 1868360000 | I.61 |
| SAI-4-M 4P Exi Z1 OL | 1868350000 | I.61 |
| SAI-4-M 4P IDC | 1766780000 | I.28 |
| SAI-4-M 4P IDC UT | 1766781000 | I.28 |
| SAI-4-M 4P M12 | 1705920000 | I.7 |
| SAI-4-M 4P M8 | 1784700000 | I.50 |
| SAI-4-M 5P M12 | 1701230000 | I.7 |
| SAI-4-M 5P M12 1:1 | 1806010000 | I.38 |
| SAI-4-M 5P M12 ECO | 1892100000 | I.17 |
| SAI-4-M 5P M12 ECO UT | 1892101000 | I.17 |
| SAI-4-M 5P M12 Ex ia | 1896050000 | I.61 |
| SAI-4-M 5P M12 M1:1 UT | 1806011000 | I.38 |
| SAI-4-M 5P M12 NPN ECO | 1892100005 | I.17 |
| SAI-4-M 5P M12 OL | 1800000000 | I.7 |
| SAI-4-M 5P M12 UT | 1701231000 | I.7 |
| SAI-4-M 5P M12 ZF | 1854000000 | I.7 |
| SAI-4-M 8P M12 | 1807640000 | I.39 |
| SAI-4-M 8P M12 UT | 1807641000 | I.39 |
| SAI-4-M23 4P M8 | 1784660000 | I.51 |

| Type | Order No. | Page |
|---|---|---|
| SAI-4-M23 4P M8 | 1784660000 | J.33 |
| SAI-4-MF 5P PUR 10M | 1804580000 | I.44 |
| SAI-4-MF 5P PUR 5M | 1804600000 | I.44 |
| SAI-4-MH-4P M12 | 1705922000 | I.36 |
| SAI-4-MH-5P M12 | 1701232000 | I.36 |
| SAI-4-MHD-4P M12 | 1705923000 | I.37 |
| SAI-4-MHD-5P M12 | 1701233000 | I.37 |
| SAI-4-MM 5P M12 | 1783500000 | I.35 |
| SAI-4-MMS 4P M12 | 1783540000 | I.35 |
| SAI-4-MMS 5P M12 | 1783520000 | I.35 |
| SAI-4-MMS 5P M12 1:1 | 1897680000 | I.38 |
| SAI-4-S 3P M8 L | 1828740000 | I.52 |
| SAI-4-S 3P M8 L OL | 1051760000 | I.52 |
| SAI-4-S 4P FC | 1847960000 | I.20 |
| SAI-4-S 4P FC | 1847960000 | J.31 |
| SAI-4-S 4P M12 | 9456000000 | I.12 |
| SAI-4-S 4P M12 | 9456000000 | I.6 |
| SAI-4-S 4P M5 | 1845840000 | I.58 |
| SAI-4-S 5P CNOMO | 1861540000 | I.23 |
| SAI-4-S 5P FC | 1847970000 | I.20 |
| SAI-4-S 5P FC | 1847970000 | J.31 |
| SAI-4-S 5P M12 | 9456000001 | I.12 |
| SAI-4-S 5P M12 | 9456000001 | I.6 |
| SAI-4-S16 3P M5 | 1845890000 | I.59 |
| SAI-4-S16 4P M5 | 1845870000 | I.59 |
| SAI-4-S8 4P M12 L | 1267330000 | I.11 |
| SAI-4-SH 4P FC | 1859110000 | I.21 |
| SAI-4-SH 4P FC | 1859110000 | J.32 |
| SAI-4-SH 5P FC | 1859130000 | I.21 |
| SAI-4-SH 5P FC | 1859130000 | J.32 |
| SAI-4/6/8 MH MH BLZF3,5 | 1782750000 | I.36 |
| SAI-4/6/8 MH-MH BL 3.5 | 1724752000 | I.36 |
| SAI-4/6/8 MH-MHD BL 3.5 | 1724753000 | I.37 |
| SAI-4/6/8 MH-MM BL 3.5 | 1724754000 | I.35 |
| SAI-4/6/8-MH BL3.5 | 1724750000 | I.7 |
| SAI-4/6/8-MH BL3.5 SV | 1724750050 | I.7 |
| SAI-4/6/8-MH BLZF3.5 | 1752080000 | I.7 |
| SAI-4/6/8-MH BLZF3.5 SV | 1752080050 | I.7 |
| SAI-4/6/8-MH LEER | 1783460000 | I.7 |
| SAI-4/6/8-MHF 4P PUR 4M | 1791450400 | I.44 |
| SAI-4/6/8-MHF 4P PUR 6M | 1791450600 | I.44 |
| SAI-4/6/8-MHF 4P PUR 9M | 1791450900 | I.44 |
| SAI-4/6/8-MHF 4P PUR14M | 1791451400 | I.44 |
| SAI-4/6/8-MHF 4P PUR20M | 1791452000 | I.44 |
| SAI-4/6/8-MHF 4P PUR28M | 1791452800 | I.44 |
| SAI-4/6/8-MHF 4P PUR34M | 1791453400 | I.44 |
| SAI-4/6/8-MHF 5P PUR 4M | 1791460400 | I.44 |
| SAI-4/6/8-MHF 5P PUR 6M | 1791460600 | I.44 |
| SAI-4/6/8-MHF 5P PUR 9M | 1791460900 | I.44 |
| SAI-4/6/8-MHF 5P PUR14M | 1791461400 | I.44 |
| SAI-4/6/8-MHF 5P PUR16M | 1791461600 | I.44 |
| SAI-4/6/8-MHF 5P PUR20M | 1791462000 | I.44 |
| SAI-4/6/8-MHF 5P PUR28M | 1791462800 | I.44 |
| SAI-4/6/8-MHF 5P PUR34M | 1791463400 | I.44 |
| SAI-4/6/8-MHF 5P PUR40M | 1791464000 | I.44 |
| SAI-4/6/8-MHF 5P PUR50M | 1791465000 | I.44 |
| SAI-4/6/8-MHF 5P PUR55M | 1791465500 | I.44 |
| SAI-6-F 3P IDC PUR 10M | 1766750000 | I.29 |
| SAI-6-F 3P IDC PUR 5M | 1766740000 | I.29 |
| SAI-6-F 3P M8 L 10M | 1828690000 | I.54 |
| SAI-6-F 3P M8 L 5M | 1828700000 | I.54 |
| SAI-6-F 4P IDC PUR 10M | 1766690000 | I.29 |
| SAI-6-F 4P IDC PUR 5M | 1766680000 | I.29 |
| SAI-6-F 4P M12 L 10M | 1265930000 | I.10 |
| SAI-6-F 4P M12 L 5M | 1265920000 | I.10 |
| SAI-6-F 4P M8 L 10M | 1849670000 | I.54 |
| SAI-6-F 4P M8 L 5M | 1849700000 | I.54 |
| SAI-6-F 4P PUR 10M | 9456480000 | I.6 |
| SAI-6-F 4P PUR 10M | 9456480000 | I.8 |
| SAI-6-F 4P PUR 15M | 9456490000 | I.6 |
| SAI-6-F 4P PUR 15M | 9456490000 | I.8 |
| SAI-6-F 4P PUR 20M | 9456510000 | I.6 |
| SAI-6-F 4P PUR 20M | 9456510000 | I.8 |
| SAI-6-F 4P PUR 3M | 9456460000 | I.8 |
| SAI-6-F 4P PUR 5M | 9456470000 | I.6 |
| SAI-6-F 4P PUR 5M | 9456470000 | I.8 |
| SAI-6-F 5P PUR 10M | 9456620000 | I.6 |
| SAI-6-F 5P PUR 10M | 9456620000 | I.8 |
| SAI-6-F 5P PUR 15M | 9456630000 | I.6 |
| SAI-6-F 5P PUR 15M | 9456630000 | I.8 |
| SAI-6-F 5P PUR 20M | 9456650000 | I.6 |
| SAI-6-F 5P PUR 20M | 9456650000 | I.8 |
| SAI-6-F 5P PUR 3M | 9456600000 | I.8 |
| SAI-6-F 5P PUR 5M | 9456610000 | I.6 |
| SAI-6-F 5P PUR 5M | 9456610000 | I.8 |
| SAI-6-M 3P IDC | 1760050000 | I.28 |
| SAI-6-M 3P IDC UT | 1760051000 | I.28 |
| SAI-6-M 4P IDC | 1766790000 | I.28 |
| SAI-6-M 4P IDC UT | 1766791000 | I.28 |
| SAI-6-M 4P M12 | 1705930000 | I.7 |
| SAI-6-M 4P M12 UT | 1705931000 | I.7 |
| SAI-6-M 5P M12 | 1701240000 | I.7 |
| SAI-6-M 5P M12 ECO | 1892090000 | I.17 |
| SAI-6-M 5P M12 ECO UT | 1892091000 | I.17 |
| SAI-6-M 5P M12 Ex ia | 1896070000 | I.61 |
| SAI-6-M 5P M12 UT | 1701241000 | I.7 |
| SAI-6-MH-4P M12 | 1705932000 | I.36 |
| SAI-6-MH-5P M12 | 1701242000 | I.36 |
| SAI-6-MHD-4P M12 | 1705933000 | I.37 |

| Type | Order No. | Page |
|---|---|---|
| SAI-6-MHD-5P M12 | 1701243000 | I.37 |
| SAI-6-S 3P M8 L | 1828730000 | I.52 |
| SAI-6-S 3P M8 L OL | 1932380000 | I.52 |
| SAI-6-S 3P M8 L SL | 1057720000 | I.53 |
| SAI-6-S 4P M12 | 9456010000 | I.12 |
| SAI-6-S 4P M12 | 9456010000 | I.6 |
| SAI-6-S 5P M12 | 9456010001 | I.12 |
| SAI-6-S 5P M12 | 9456010001 | I.6 |
| SAI-6-S12 4P M12 L | 1265940000 | I.11 |
| SAI-8-B 4P M12 F10 | 1812170000 | I.43 |
| SAI-8-B 5P M12 SL | 1847560000 | I.41 |
| SAI-8-F 3P IDC PUR 10M | 1766770000 | I.29 |
| SAI-8-F 3P IDC PUR 5M | 1766760000 | I.29 |
| SAI-8-F 3P M5 L10M | 1845830000 | I.58 |
| SAI-8-F 3P M5 L5M | 1851760000 | I.58 |
| SAI-8-F 3P M8 L 10M | 1828670000 | I.54 |
| SAI-8-F 3P M8 L 5M | 1828680000 | I.54 |
| SAI-8-F 3P M8 PUR 10M | 1784610000 | I.50 |
| SAI-8-F 3P M8 PUR 5M | 1784620000 | I.50 |
| SAI-8-F 4P FC 10M | 1847980000 | I.19 |
| SAI-8-F 4P FC 2M | 1847990000 | I.19 |
| SAI-8-F 4P FC 5M | 1848000000 | I.19 |
| SAI-8-F 4P IDC PUR 10M | 1766710000 | I.29 |
| SAI-8-F 4P IDC PUR 5M | 1766700000 | I.29 |
| SAI-8-F 4P M5 L10M | 1845810000 | I.58 |
| SAI-8-F 4P M5 L5M | 1851750000 | I.58 |
| SAI-8-F 4P M8 L 10M | 1828610000 | I.54 |
| SAI-8-F 4P M8 L 5M | 1828620000 | I.54 |
| SAI-8-F 4P M8 PUR 10M | 1784570000 | I.50 |
| SAI-8-F 4P M8 PUR 5M | 1784580000 | I.50 |
| SAI-8-F 4P PUR 10M | 9456760000 | I.6 |
| SAI-8-F 4P PUR 10M | 9456760000 | I.8 |
| SAI-8-F 4P PUR 15M | 9456770000 | I.6 |
| SAI-8-F 4P PUR 15M | 9456770000 | I.8 |
| SAI-8-F 4P PUR 20M | 9456790000 | I.6 |
| SAI-8-F 4P PUR 20M | 9456790000 | I.8 |
| SAI-8-F 4P PUR 3M | 9456740000 | I.8 |
| SAI-8-F 4P PUR 5M | 9456750000 | I.6 |
| SAI-8-F 4P PUR 5M | 9456750000 | I.8 |
| SAI-8-F 5P 10M 0.5/1.0U | 9457600000 | I.8 |
| SAI-8-F 5P 15M 0.5/1.0U | 1784510000 | I.8 |
| SAI-8-F 5P 20M 0.5/1.0U | 1784500000 | I.8 |
| SAI-8-F 5P 2M 0.5/1.0U | 7915030000 | I.8 |
| SAI-8-F 5P 5M 0.5/1.0U | 9457590000 | I.8 |
| SAI-8-F 5P CNOMO 10M | 1861590000 | I.23 |
| SAI-8-F 5P CNOMO 5M | 1861550000 | I.23 |
| SAI-8-F 5P FC 10M | 1848010000 | I.19 |
| SAI-8-F 5P FC 2M | 1848020000 | I.19 |
| SAI-8-F 5P FC 5M | 1848030000 | I.19 |
| SAI-8-F 5P M12 5M VA | 1865310000 | I.30 |
| SAI-8-F 5P NPN-PNP 5M | 1814990000 | I.40 |
| SAI-8-F 5P PUR 10M | 9456900000 | I.6 |
| SAI-8-F 5P PUR 10M | 9456900000 | I.8 |
| SAI-8-F 5P PUR 15M | 9456910000 | I.6 |
| SAI-8-F 5P PUR 15M | 9456910000 | I.8 |
| SAI-8-F 5P PUR 20M | 9456930000 | I.6 |
| SAI-8-F 5P PUR 20M | 9456930000 | I.8 |
| SAI-8-F 5P PUR 3M | 9456880000 | I.8 |
| SAI-8-F 5P PUR 5M | 9456890000 | I.6 |
| SAI-8-F 5P PUR 5M | 9456890000 | I.8 |
| SAI-8-FMM-4P M12 10M | 9456760002 | I.33 |
| SAI-8-FMM-4P M12 10M | 9456760002 | I.34 |
| SAI-8-FMM-4P M12 10M | 9456760002 | I.6 |
| SAI-8-FMM-4P M12 5M | 9456750002 | I.33 |
| SAI-8-FMM-4P M12 5M | 9456750002 | I.34 |
| SAI-8-FMM-4P M12 5M | 9456750002 | I.6 |
| SAI-8-M 3P IDC | 1760060000 | I.28 |
| SAI-8-M 3P IDC UT | 1760061000 | I.28 |
| SAI-8-M 3P M8 | 1784670000 | I.50 |
| SAI-8-M 4P Exi Z1 IL | 1868370000 | I.61 |
| SAI-8-M 4P Exi Z1 OL | 1894380000 | I.61 |
| SAI-8-M 4P IDC | 1766800000 | I.28 |
| SAI-8-M 4P IDC UT | 1766801000 | I.28 |
| SAI-8-M 4P M12 | 1705940000 | I.7 |
| SAI-8-M 4P M12 UT | 1705941000 | I.7 |
| SAI-8-M 4P M8 | 1784690000 | I.50 |
| SAI-8-M 5P FC | 1848070000 | I.22 |
| SAI-8-M 5P M12 | 1701250000 | I.7 |
| SAI-8-M 5P M12 ECO | 1892080000 | I.17 |
| SAI-8-M 5P M12 ECO UT | 1892081000 | I.17 |
| SAI-8-M 5P M12 Ex ia | 1896090000 | I.61 |
| SAI-8-M 5P M12 NPN | 1781060000 | I.7 |
| SAI-8-M 5P M12 NPN ECO | 1892080005 | I.17 |
| SAI-8-M 5P M12 OL UT | 1740191000 | I.7 |
| SAI-8-M 5P M12 UT | 1701251000 | I.7 |
| SAI-8-M 5P M12 ZF III | 1767880000 | I.7 |
| SAI-8-M-4P M12 DIP | 1059430000 | I.14 |
| SAI-8-M16 3P M8 | 1795900000 | I.51 |
| SAI-8-M16 4P M12 | 1831020000 | I.13 |
| SAI-8-M23 4P M8 | 1784650000 | I.51 |
| SAI-8-M23 4P M8 | 1784650000 | J.33 |
| SAI-8-MF 4P PUR 10M M12 | 1789190000 | I.44 |
| SAI-8-MF 4P PUR 5M M12 | 1799960000 | I.44 |
| SAI-8-MF 5P PUR 10m | 9457430000 | I.44 |
| SAI-8-MF 5P PUR 5M | 1804590000 | I.44 |
| SAI-8-MF 5P PUR 5M OL | 9457350000 | I.44 |
| SAI-8-MH-4P M12 | 1705942000 | I.36 |
| SAI-8-MH-5P M12 | 1701252000 | I.36 |
| SAI-8-MH-5P M12 ZF III | 1782760000 | I.36 |

| Type | Order No. | Page |
|---|---|---|
| SAI-8-MHD-4P M12 | 1705943000 | I.37 |
| SAI-8-MHD-5P M12 | 1701253000 | I.37 |
| SAI-8-MM 5P M12 | 1783490000 | I.35 |
| SAI-8-MM 5P M12 UT | 1783491000 | I.35 |
| SAI-8-MMH 5P M12 ZF | 1782740000 | I.35 |
| SAI-8-MMS 4P M12 | 1783530000 | I.35 |
| SAI-8-MMS 5P M12 | 1783510000 | I.35 |
| SAI-8-S 3P M5 | 1845850000 | I.58 |
| SAI-8-S 4P FC | 1847920000 | I.20 |
| SAI-8-S 4P FC | 1847920000 | J.31 |
| SAI-8-S 4P M12 | 9456020000 | I.12 |
| SAI-8-S 4P M12 | 9456020000 | I.6 |
| SAI-8-S 5P CNOMO | 1861580000 | I.23 |
| SAI-8-S 5P FC | 1848040000 | I.20 |
| SAI-8-S 5P FC | 1848040000 | J.31 |
| SAI-8-S 5P M12 | 1795470000 | I.12 |
| SAI-8-S12 3P M8 L | 1871680000 | I.52 |
| SAI-8-S16 3P M5 | 1845880000 | I.59 |
| SAI-8-S16/19P 4P M5 | 1845860000 | I.59 |
| SAI-8-SH 4P FC | 1859120000 | I.21 |
| SAI-8-SH 4P FC | 1859120000 | J.32 |
| SAI-8-SH 5P FC | 1859140000 | I.21 |
| SAI-8-SH 5P FC | 1859140000 | J.32 |
| SAI-8-SHB 5P F13 FC | 1872460000 | I.25 |
| SAI-8-SHB 5P FC | 1872440000 | I.24 |
| SAI-ASI T FF small | 1026090000 | C.61 |
| SAI-ASI T FFR | 1924980000 | C.61 |
| SAI-ASI T FR | 1925010000 | C.60 |
| SAI-ASI-L-M12-4I V3 | 1962680000 | C.59 |
| SAI-ASI-L-M12-4I/4O V3 | 1962710000 | C.59 |
| SAI-ASI-L-M12-4O V3 | 1962700000 | C.59 |
| SAI-ASI-L-M12-8I V3 | 1962690000 | C.59 |
| SAI-ASI-L-M8-4I V3 | 1962640000 | C.59 |
| SAI-ASI-L-M8-4I/4O V3 | 1962670000 | C.59 |
| SAI-ASI-L-M8-4O V3 | 1962660000 | C.59 |
| SAI-ASI-L-M8-8I V3 | 1962650000 | C.59 |
| SAI-AU ET SET M12 A COD | 1235340000 | G.7 |
| SAI-AU M12 CAN 16DI | 1906650000 | F.12 |
| SAI-AU M12 CAN 16DI | 1906650000 | F.14 |
| SAI-AU M12 CAN 16DI | 1906650000 | F.4 |
| SAI-AU M12 CAN 16DI/8DO | 1906660000 | F.12 |
| SAI-AU M12 CAN 16DI/8DO | 1906660000 | F.14 |
| SAI-AU M12 CAN 16DI/8DO | 1906660000 | F.4 |
| SAI-AU M12 CAN AI/AO/DI | 1906670000 | F.13 |
| SAI-AU M12 CAN AI/AO/DI | 1906670000 | F.14 |
| SAI-AU M12 CAN AI/AO/DI | 1906670000 | F.4 |
| SAI-AU M12 DN 16DI | 1906700000 | F.16 |
| SAI-AU M12 DN 16DI | 1906700000 | F.18 |
| SAI-AU M12 DN 16DI | 1906700000 | F.4 |
| SAI-AU M12 DN 16DI/8DO | 1906710000 | F.16 |
| SAI-AU M12 DN 16DI/8DO | 1906710000 | F.18 |
| SAI-AU M12 DN 16DI/8DO | 1906710000 | F.4 |
| SAI-AU M12 DN AI/AO/DI | 1906720000 | F.17 |
| SAI-AU M12 DN AI/AO/DI | 1906720000 | F.18 |
| SAI-AU M12 DN AI/AO/DI | 1906720000 | F.4 |
| SAI-AU M12 DN GW 16DI | 1938570000 | F.24 |
| SAI-AU M12 DN GW 16DI | 1938570000 | F.25 |
| SAI-AU M12 DN GW 16DI | 1938570000 | F.4 |
| SAI-AU M12 PB 16DI | 1890020000 | F.8 |
| SAI-AU M12 PB 16DI/8DO | 1890010000 | F.8 |
| SAI-AU M12 PB 8DI8DO 2A | 1968220000 | F.10 |
| SAI-AU M12 PB 8DI8DO 2A | 1968220000 | F.4 |
| SAI-AU M12 PB 8DI8DO 2A | 1968220000 | F.8 |
| SAI-AU M12 PB AI/AO/DI | 1890000000 | F.9 |
| SAI-AU M12 PB GW 16DI | 1938550000 | F.22 |
| SAI-AU M12 PB GW 16DI | 1938550000 | F.23 |
| SAI-AU M12 PB GW 16DI | 1938550000 | F.4 |
| SAI-AU M12 SB 2Counter | 1938730000 | F.23 |
| SAI-AU M12 SB 2Counter | 1938730000 | F.25 |
| SAI-AU M12 SB 2Counter | 1938730000 | F.27 |
| SAI-AU M12 SB 2Counter | 1938730000 | F.30 |
| SAI-AU M12 SB 2Counter | 1938730000 | F.4 |
| SAI-AU M12 SB 4AI | 1938690000 | F.23 |
| SAI-AU M12 SB 4AI | 1938690000 | F.25 |
| SAI-AU M12 SB 4AI | 1938690000 | F.27 |
| SAI-AU M12 SB 4AI | 1938690000 | F.29 |
| SAI-AU M12 SB 4AI | 1938690000 | F.4 |
| SAI-AU M12 SB 4AO | 1938700000 | F.23 |
| SAI-AU M12 SB 4AO | 1938700000 | F.25 |
| SAI-AU M12 SB 4AO | 1938700000 | F.27 |
| SAI-AU M12 SB 4AO | 1938700000 | F.29 |
| SAI-AU M12 SB 4AO | 1938700000 | F.4 |
| SAI-AU M12 SB 4PT100 | 1938710000 | F.23 |
| SAI-AU M12 SB 4PT100 | 1938710000 | F.25 |
| SAI-AU M12 SB 4PT100 | 1938710000 | F.27 |
| SAI-AU M12 SB 4PT100 | 1938710000 | F.32 |
| SAI-AU M12 SB 4PT100 | 1938710000 | F.4 |
| SAI-AU M12 SB 4Thermo | 1938720000 | F.23 |
| SAI-AU M12 SB 4Thermo | 1938720000 | F.25 |
| SAI-AU M12 SB 4Thermo | 1938720000 | F.27 |
| SAI-AU M12 SB 4Thermo | 1938720000 | F.31 |
| SAI-AU M12 SB 4Thermo | 1938720000 | F.4 |
| SAI-AU M12 SB 8DI | 1938610000 | F.23 |
| SAI-AU M12 SB 8DI | 1938610000 | F.25 |
| SAI-AU M12 SB 8DI | 1938610000 | F.27 |
| SAI-AU M12 SB 8DI | 1938610000 | F.28 |
| SAI-AU M12 SB 8DI | 1938610000 | F.4 |
| SAI-AU M12 SB 8DIO | 1938640000 | F.23 |
| SAI-AU M12 SB 8DIO | 1938640000 | F.25 |

| Type | Order No. | Page |
|---|---|---|
| SAI-AU M12 SB 8DIO | 1938640000 | F.27 |
| SAI-AU M12 SB 8DIO | 1938640000 | F.28 |
| SAI-AU M12 SB 8DIO | 1938640000 | F.4 |
| SAI-AU M12 SB 8DO 2A | 1938680000 | F.23 |
| SAI-AU M12 SB 8DO 2A | 1938680000 | F.25 |
| SAI-AU M12 SB 8DO 2A | 1938680000 | F.27 |
| SAI-AU M12 SB 8DO 2A | 1938680000 | F.28 |
| SAI-AU M12 USB GW 8I8O | 1962240000 | F.26 |
| SAI-AU M12 USB GW 8I8O | 1962240000 | F.27 |
| SAI-AU M12 USB GW 8I8O | 1962240000 | F.4 |
| SAI-AU M8 CAN 16DI | 1906680000 | F.12 |
| SAI-AU M8 CAN 16DI | 1906680000 | F.14 |
| SAI-AU M8 CAN 16DI | 1906680000 | F.4 |
| SAI-AU M8 CAN 16DI/8DO | 1906690000 | F.12 |
| SAI-AU M8 CAN 16DI/8DO | 1906690000 | F.14 |
| SAI-AU M8 CAN 16DI/8DO | 1906690000 | F.4 |
| SAI-AU M8 DN 16DI | 1906730000 | F.16 |
| SAI-AU M8 DN 16DI | 1906730000 | F.18 |
| SAI-AU M8 DN 16DI | 1906730000 | F.4 |
| SAI-AU M8 DN 16DI/8DO | 1906740000 | F.16 |
| SAI-AU M8 DN 16DI/8DO | 1906740000 | F.18 |
| SAI-AU M8 DN 16DI/8DO | 1906740000 | F.4 |
| SAI-AU M8 PB 16DI | 1906550000 | F.10 |
| SAI-AU M8 PB 16DI | 1906550000 | F.4 |
| SAI-AU M8 PB 16DI | 1906550000 | F.8 |
| SAI-AU M8 PB 16DI/8DO | 1906640000 | F.10 |
| SAI-AU M8 PB 16DI/8DO | 1906640000 | F.4 |
| SAI-AU M8 PB 16DI/8DO | 1906640000 | F.8 |
| SAI-AU M8 PB 8DI8DO 2A | 1975450000 | F.10 |
| SAI-AU M8 PB 8DI8DO 2A | 1975450000 | F.4 |
| SAI-AU M8 PB 8DI8DO 2A | 1975450000 | F.8 |
| SAI-AU M8 PB GW 16DI | 1024310000 | F.22 |
| SAI-AU M8 SB 8DI | 1938600000 | F.23 |
| SAI-AU M8 SB 8DI | 1938600000 | F.25 |
| SAI-AU M8 SB 8DI | 1938600000 | F.27 |
| SAI-AU M8 SB 8DI | 1938600000 | F.28 |
| SAI-AU M8 SB 8DI | 1938600000 | F.4 |
| SAI-AU M8 SB 8DIO | 1938630000 | F.23 |
| SAI-AU M8 SB 8DIO | 1938630000 | F.25 |
| SAI-AU M8 SB 8DIO | 1938630000 | F.27 |
| SAI-AU M8 SB 8DIO | 1938630000 | F.28 |
| SAI-AU M8 SB 8DIO | 1938630000 | F.4 |
| SAI-AU M8 SB 8DO 2A | 1938660000 | F.23 |
| SAI-AU M8 SB 8DO 2A | 1938660000 | F.25 |
| SAI-AU M8 SB 8DO 2A | 1938660000 | F.27 |
| SAI-AU M8 SB 8DO 2A | 1938660000 | F.28 |
| SAI-AU M8 SB 8DO 2A | 1938660000 | F.4 |
| SAI-DC-TOOL | 1795020000 | I.27 |
| SAI-M23-BE-12 | 1995850000 | J.14 |
| SAI-M23-BE-12-10MM | 1224170000 | J.21 |
| SAI-M23-BE-12-10MM-G | 1224590000 | J.21 |
| SAI-M23-BE-12-10MM-PE-G | 1224610000 | J.21 |
| SAI-M23-BE-12-17MM | 1224210000 | J.21 |
| SAI-M23-BE-12-3.5MM-PE | 1224190000 | J.21 |
| SAI-M23-BE-12-F | 1224150000 | J.21 |
| SAI-M23-BE-12-F-G | 1224570000 | J.21 |
| SAI-M23-BE-12-G | 1296730000 | J.14 |
| SAI-M23-BE-16 | 1170090000 | J.15 |
| SAI-M23-BE-16-17MM | 1224280000 | J.22 |
| SAI-M23-BE-16-3.5MM | 1224270000 | J.22 |
| SAI-M23-BE-16-F | 1224250000 | J.22 |
| SAI-M23-BE-17 | 1170110000 | J.15 |
| SAI-M23-BE-17-10 MM | 1224350000 | J.22 |
| SAI-M23-BE-17-10MM-G | 1224680000 | J.22 |
| SAI-M23-BE-17-17MM | 1224360000 | J.22 |
| SAI-M23-BE-17-17MM-G | 1224690000 | J.22 |
| SAI-M23-BE-17-F | 1224330000 | J.22 |
| SAI-M23-BE-17-F-G | 1224660000 | J.22 |
| SAI-M23-BE-19 | 1170130000 | J.15 |
| SAI-M23-BE-19-10MM | 1224420000 | J.23 |
| SAI-M23-BE-19-17MM | 1224450000 | J.23 |
| SAI-M23-BE-19-F | 1224400000 | J.23 |
| SAI-M23-BE-6 | 1170020000 | J.14 |
| SAI-M23-BE-6-17MM | 1224040000 | J.20 |
| SAI-M23-BE-7 | 1170040000 | J.14 |
| SAI-M23-BE-7-17MM | 1224110000 | J.20 |
| SAI-M23-BE-7-3.5MM | 1224100000 | J.20 |
| SAI-M23-BE-7-F | 1224080000 | J.20 |
| SAI-M23-BE-9 | 1170060000 | J.14 |
| SAI-M23-BE-9-10MM | 1224520000 | J.21 |
| SAI-M23-BE-9-10MM-G | 1224750000 | J.21 |
| SAI-M23-BE-9-17MM | 1224530000 | J.21 |
| SAI-M23-BE-9-17MM-G | 1224760000 | J.21 |
| SAI-M23-BE-9-F | 1224500000 | J.21 |
| SAI-M23-BE-9-F-G | 1224740000 | J.21 |
| SAI-M23-BE-L-4/4 | 1995810000 | J.28 |
| SAI-M23-BE-L-6 | 1170370000 | J.28 |
| SAI-M23-GS-7/12 | 1995840000 | J.12 |
| SAI-M23-GS-L-11/17 | 1299390000 | J.12 |
| SAI-M23-GS-L-7/12 | 1995800000 | J.26 |
| SAI-M23-GS-S-7/12 | 1169920000 | J.12 |
| SAI-M23-GSW-L-7/12 | 1170280000 | J.26 |
| SAI-M23-KBC-0.08/0.56 | 1995860000 | J.16 |
| SAI-M23-KBC-0.08/0.56 | 1995860000 | K.12 |
| SAI-M23-KBC-0.08/0.56 | 1995860000 | K.13 |
| SAI-M23-KBC-0.25/1.00 | 1995830000 | J.29 |
| SAI-M23-KBC-0.25/1.00 | 1995830000 | K.12 |
| SAI-M23-KBC-0.34/1.00 | 1170180000 | J.16 |
| SAI-M23-KBC-0.34/1.00 | 1170180000 | K.12 |

| Type | Order No. | Page |
|---|---|---|
| SAI-M23-KBC-0.75/2.50 | 1995820000 | J.29 |
| SAI-M23-KBC-0.75/2.50 | 1995820000 | K.12 |
| SAI-M23-KBC-1.00-1.5 | 1170210000 | J.16 |
| SAI-M23-KBC-1.5-.14-.56 | 1170230000 | J.16 |
| SAI-M23-KBC-1.5-.14-.56 | 1170230000 | K.12 |
| SAI-M23-KBC-1.5-.56-1.0 | 1170240000 | J.16 |
| SAI-M23-KBC-1.5-.56-1.0 | 1170240000 | K.12 |
| SAI-M23-KBC-2-0.75-2.5 | 1170260000 | J.17 |
| SAI-M23-KBC-2-0.75-2.5 | 1170260000 | K.12 |
| SAI-M23-KBC-L-2.5-4.0 | 1170420000 | J.29 |
| SAI-M23-KBC-L-2.5-4.0 | 1170420000 | K.12 |
| SAI-M23-KS-7/12 | 1169900000 | J.12 |
| SAI-M23-KS-L-7/12 | 1170270000 | J.26 |
| SAI-M23-KSC-0,25-1.0 | 1170390000 | J.29 |
| SAI-M23-KSC-0,25-1.0 | 1170390000 | K.12 |
| SAI-M23-KSC-0.08/0.56 | 1170140000 | J.16 |
| SAI-M23-KSC-0.14/1.00 | 1170150000 | J.16 |
| SAI-M23-KSC-0.14/1.00 | 1170150000 | K.12 |
| SAI-M23-KSC-1.00-1.5 | 1170170000 | J.16 |
| SAI-M23-KSC-1.5-0.14-1 | 1170220000 | J.16 |
| SAI-M23-KSC-1.5-0.14-1 | 1170220000 | K.12 |
| SAI-M23-KSC-2-0.75-2.5 | 1170250000 | J.17 |
| SAI-M23-KSC-2-0.75-2.5 | 1170250000 | K.12 |
| SAI-M23-KSC-L-0.75-2.5 | 1170400000 | J.29 |
| SAI-M23-KSC-L-0.75-2.5 | 1170400000 | K.12 |
| SAI-M23-KSC-L-2.5-4.0 | 1170410000 | J.29 |
| SAI-M23-KSC-L-2.5-4.0 | 1170410000 | K.12 |
| SAI-M23-KSW-L-7/12 | 1170290000 | J.26 |
| SAI-M23-SE-12 | 1170070000 | J.14 |
| SAI-M23-SE-12-10MM | 1224220000 | J.21 |
| SAI-M23-SE-12-10MM-PE-G | 1224620000 | J.21 |
| SAI-M23-SE-12-12MM-G | 1224630000 | J.21 |
| SAI-M23-SE-12-17MM | 1224230000 | J.21 |
| SAI-M23-SE-12-17MM-G | 1224640000 | J.21 |
| SAI-M23-SE-12-3.5MM | 1224160000 | J.21 |
| SAI-M23-SE-12-3.5MM-G | 1224580000 | J.21 |
| SAI-M23-SE-12-3.5MM-PE | 1224180000 | J.21 |
| SAI-M23-SE-12-F | 1224140000 | J.21 |
| SAI-M23-SE-12-F-G | 1224560000 | J.21 |
| SAI-M23-SE-16 | 1170080000 | J.15 |
| SAI-M23-SE-16-10MM | 1224290000 | J.22 |
| SAI-M23-SE-16-17MM | 1224310000 | J.22 |
| SAI-M23-SE-16-3.5MM | 1224260000 | J.22 |
| SAI-M23-SE-16-F | 1224240000 | J.22 |
| SAI-M23-SE-17 | 1170100000 | J.15 |
| SAI-M23-SE-17-10MM | 1224370000 | J.22 |
| SAI-M23-SE-17-10MM-G | 1224710000 | J.22 |
| SAI-M23-SE-17-17MM | 1224380000 | J.22 |
| SAI-M23-SE-17-17MM-G | 1224720000 | J.22 |
| SAI-M23-SE-17-3.5MM | 1224340000 | J.22 |
| SAI-M23-SE-17-3.5MM-G | 1224670000 | J.22 |
| SAI-M23-SE-17-F | 1224320000 | J.22 |
| SAI-M23-SE-17-F-G | 1224650000 | J.22 |
| SAI-M23-SE-19 | 1170120000 | J.15 |
| SAI-M23-SE-19-10MM | 1224470000 | J.23 |
| SAI-M23-SE-19-10MM-PE | 1224430000 | J.23 |
| SAI-M23-SE-19-17MM | 1224480000 | J.23 |
| SAI-M23-SE-19-3,5MMPE12 | 1224460000 | J.23 |
| SAI-M23-SE-19-3.5MM | 1224410000 | J.23 |
| SAI-M23-SE-19-3.5MM-PE | 1224440000 | J.23 |
| SAI-M23-SE-19-F | 1224390000 | J.23 |
| SAI-M23-SE-6 | 1170000000 | J.14 |
| SAI-M23-SE-6-10MM | 1224050000 | J.20 |
| SAI-M23-SE-6-17MM | 1224060000 | J.20 |
| SAI-M23-SE-7 | 1170030000 | J.14 |
| SAI-M23-SE-7-10MM | 1224120000 | J.20 |
| SAI-M23-SE-7-17MM | 1224130000 | J.20 |
| SAI-M23-SE-7-3.5MM | 1224090000 | J.20 |
| SAI-M23-SE-7-F | 1224070000 | J.20 |
| SAI-M23-SE-9 | 1170050000 | J.14 |
| SAI-M23-SE-9-10MM | 1224540000 | J.21 |
| SAI-M23-SE-9-10MM-G | 1224770000 | J.21 |
| SAI-M23-SE-9-17MM | 1224550000 | J.21 |
| SAI-M23-SE-9-17MM-G | 1224780000 | J.21 |
| SAI-M23-SE-9-3.5MM | 1224510000 | J.21 |
| SAI-M23-SE-9-F | 1224490000 | J.21 |
| SAI-M23-SE-9-F-G | 1224730000 | J.21 |
| SAI-M23-SE-L-4/4 | 1170380000 | J.28 |
| SAI-M23-SE-L-6 | 1170350000 | J.28 |
| SAI-SA-3-IDC | 9457720000 | I.26 |
| SAI-SA-4-IDC | 1766810000 | I.26 |
| SAI-SCREWTY BOX | 1939180000 | K.6 |
| SAI-SCREWTY TOOL BOX | 1939170000 | K.6 |
| SAI-SK M12 MT | 1802750000 | D.31 |
| SAI-SK M5 | 1855310000 | D.31 |
| SAI-SK M8 | 1802760000 | C.59 |
| SAI-SK M8 | 1802760000 | D.31 |
| SAI-SK M8 | 1802760000 | F.10 |
| SAI-SK Stecker M12 | 1781520000 | D.31 |
| SAI-SK Stecker M12 | 1781520000 | F.10 |
| SAI-SK-M12 | 9456050000 | C.59 |
| SAI-SK-M12 | 9456050000 | D.31 |
| SAI-SK-M12 | 9456050000 | F.10 |
| SAI-SK-M12 | 9456050000 | F.14 |
| SAI-SK-M12 | 9456050000 | F.18 |
| SAI-SK-M12 | 9456050000 | F.23 |
| SAI-SK-M12 | 9456050000 | F.25 |
| SAI-SK-M12 | 9456050000 | F.27 |
| SAI-SK-M12 | 9456050000 | F.37 |

| Type | Order No. | Page |
|---|---|---|
| SAI-SK-M12 BU | 8425960000 | D.31 |
| SAI-SK-M12 IDC | 1794850000 | D.31 |
| SAI-SK-M12 IDC | 1794850000 | I.27 |
| SAI-SK-M12-UNI | 2330260000 | D.31 |
| SAI-SK-M12-UNI | 2330260000 | F.10 |
| SAI-SK-M12-UNI | 2330260000 | F.14 |
| SAI-SK-M12-UNI | 2330260000 | F.18 |
| SAI-SK-M12-UNI | 2330260000 | F.23 |
| SAI-SK-M12-UNI | 2330260000 | F.25 |
| SAI-SK-M12-UNI | 2330260000 | F.27 |
| SAI-SK-M12-UNI | 2330260000 | F.37 |
| SAI-SSA-PG7 | 1938300000 | D.42 |
| SAI-T-5-M12/M12 B-COD | 1004310150 | B.27 |
| SAI-T-5-M12/M12 B-COD | 1057940000 | D.29 |
| SAI-T-5S-PARA | 1001180001 | K.15 |
| SAI-TS35 MF | 1917400000 | I.45 |
| SAI-WDF 5P B M12 60mm | 1820690000 | D.30 |
| SAI-WDF 5P M12 60mm | 1819450000 | D.30 |
| SAI-Y-4-4/2-4 M12/8 | 1783420000 | D.28 |
| SAI-Y-4S-M12/M12 | 1060730000 | D.28 |
| SAI-Y-5S B2-4 2M12 | 1783410000 | D.28 |
| SAI-Y-5S M12/M12 2Bo | 1881710000 | D.30 |
| SAI-Y-5S PARA 2M12 | 1783430000 | D.28 |
| SAI-Y-5S PARA 2M12 | 1783430000 | H.7 |
| SAI-Y-5S- M12/M12 | 1826880000 | D.28 |
| SAIB 5/9-VA | 1920710000 | C.31 |
| SAIB 5/9-VA | 1920710000 | D.12 |
| SAIB 5/9-VA | 1920710000 | I.31 |
| SAIB 5/9-VA-B-COD | 1920730000 | C.11 |
| SAIB 5/9-VA-B-COD | 1920730000 | D.12 |
| SAIB 5/9-VA-B-COD | 1920730000 | I.31 |
| SAIB-12/9-(TL) | 1924960000 | D.11 |
| SAIB-12/9-(TL) | 1924960000 | D.5 |
| SAIB-3-IDC (0,75) M12 | 1852730000 | D.25 |
| SAIB-3-IDC-M12B-COD | 1864740000 | C.13 |
| SAIB-3-IDC-M12B-COD | 1864740000 | D.16 |
| SAIB-3-IDC-M8 small | 1784030001 | D.26 |
| SAIB-3/7 | 1815670300 | B.7 |
| SAIB-3/7 | 1010840050 | C.74 |
| SAIB-3/7 | 1021490000 | D.5 |
| SAIB-3/7 | 1021490000 | D.7 |
| SAIB-3/7 | 1224020000 | J.20 |
| SAIB-3/9 | 1021510000 | D.5 |
| SAIB-4-IDC (0,75) M12 | 1852750000 | D.25 |
| SAIB-4-IDC-M12 small | 1781540001 | D.24 |
| SAIB-4-IDC-M8 small | 1784050001 | D.26 |
| SAIB-4/11-1.5 | 1353730000 | D.9 |
| SAIB-4/11-7/8" | 1292050000 | E.7 |
| SAIB-4/7 | 9457240000 | D.5 |
| SAIB-4/7 | 9457240000 | D.7 |
| SAIB-4/7-(KV) | 1921080000 | D.10 |
| SAIB-4/9 | 1807230000 | D.7 |
| SAIB-4/9-7/8" | 1812480000 | E.6 |
| SAIB-5/11-1.5 | 1353750000 | D.9 |
| SAIB-5/11-7/8" | 1292010000 | E.7 |
| SAIB-5/6S M12 5P A-COD | 1191020000 | C.32 |
| SAIB-5/6S M12 5P A-COD | 1191020000 | D.15 |
| SAIB-5/7 | 9457250000 | D.5 |
| SAIB-5/7 | 9457250000 | D.8 |
| SAIB-5/7-(KV) | 1921070000 | D.10 |
| SAIB-5/7-ZF | 1924970000 | D.19 |
| SAIB-5/7-ZF | 1924970000 | D.5 |
| SAIB-5/9 | 1807250000 | D.8 |
| SAIB-5/9-7/8" | 1292000000 | E.6 |
| SAIB-8/9 | 1836960000 | D.8 |
| SAIB-M-5/8S M12 5P A-COD | 1784750000 | C.32 |
| SAIB-M-5/8S M12 5P A-COD | 1784750000 | D.15 |
| SAIB-M23-12P-AN-1,0M | 1877440100 | J.30 |
| SAIB-M23-12P-ST-1,0M | 1886440100 | J.30 |
| SAIB-M23-19P-ST-1,0M | 1818180100 | J.30 |
| SAIB-M8-3P | 1803870000 | D.20 |
| SAIB-M8-4P | 1803880000 | D.20 |
| SAIB-VSA-3P/230/11-H/OB | 1873150000 | D.40 |
| SAIB-VSA-3P/230/9-H/OB | 1873130000 | D.40 |
| SAIB-VSA-3P/230/9/LD | 1873110000 | D.40 |
| SAIB-VSA-3P/24/9/LD | 1873120000 | D.40 |
| SAIB-VSA-3P/250/11-OB | 1873090000 | D.40 |
| SAIB-VSA-3P/250/9-OB | 1873070000 | D.40 |
| SAIB-VSA-4P/230/11-H/OB | 1873160000 | D.40 |
| SAIB-VSA-4P/230/9-H/OB | 1873140000 | D.40 |
| SAIB-VSA-4P/250/11-OB | 1873100000 | D.40 |
| SAIB-VSA-4P/250/9-OB | 1873080000 | D.40 |
| SAIB-VSB-3P/24/9/LD | 1873180000 | D.40 |
| SAIB-VSB-3P/250/9-OB | 1873170000 | D.40 |
| SAIB-VSBD-3P/250/9-OB | 1873190000 | D.40 |
| SAIB-VSC-3P/250/7-OB | 1873200000 | D.40 |
| SAIB-VSC-4P/250/7-OB | 1873210000 | D.40 |
| SAIB-VSCD-3P/250/7-OB | 1873220000 | D.40 |
| SAIB-VSCD-4P/250/7-OB | 1873230000 | D.40 |
| SAIBM 5/8S M12 5P B-COD | 1784780000 | C.12 |
| SAIBM 5/8S M12 5P B-COD | 1784780000 | D.16 |
| SAIBM-4/8S-M12 4P A-ZF | 1784740002 | D.5 |
| SAIBM-4/8S-M12 4P D-ZF | 1892130001 | D.18 |
| SAIBM-4/8S-M12-4P D-COD | 1892130000 | C.77 |
| SAIBM-4/8S-M12-4P D-COD | 1892130000 | D.16 |
| SAIBM-8/11S-M12 | 1118920000 | D.14 |
| SAIBM-8/9S-M12 | 1258930000 | D.14 |
| SAIBM-M8-3P(TL) | 1921010000 | D.21 |
| SAIBM-M8-3P(TL) | 1921010000 | D.6 |

| Type | Order No. | Page |
|---|---|---|
| SAIBM-M8-4P(TL) | 1921020000 | D.21 |
| SAIBM-M8-4P(TL) | 1921020000 | D.6 |
| SAIBW-12/9-(TL) | 1925870000 | D.11 |
| SAIBW-3/7 | 1021310000 | D.5 |
| SAIBW-3/9 | 1021320000 | D.7 |
| SAIBW-4-IDC M12 | 1812890000 | D.24 |
| SAIBW-4/11-7/8" | 1292070000 | E.7 |
| SAIBW-4/7 | 9457700000 | D.5 |
| SAIBW-4/7 | 9457700000 | D.7 |
| SAIBW-4/7-(KV) | 1935610000 | D.10 |
| SAIBW-4/8S-M12 4P D-ZF | 1139330000 | D.18 |
| SAIBW-4/9 | 1807240000 | D.7 |
| SAIBW-4/9-7/8" | 1812470000 | E.6 |
| SAIBW-5/11-7/8" | 1292030000 | E.7 |
| SAIBW-5/7 | 9457260000 | D.5 |
| SAIBW-5/7 | 9457260000 | D.8 |
| SAIBW-5/7-(KV) | 1962630000 | D.10 |
| SAIBW-5/8S-M12 5P A-ZF | 1275750000 | D.5 |
| SAIBW-5/9 | 1807330000 | D.8 |
| SAIBW-5/9-7/8" | 1292020000 | E.6 |
| SAIBW-M-4/8 M12 | 1803910000 | C.32 |
| SAIBW-M-4/8 M12 | 1803910000 | D.15 |
| SAIBW-M-5/8 M12 | 1803920000 | C.32 |
| SAIBW-M-5/8 M12 | 1803920000 | D.15 |
| SAIBW-M-5/8 M12 B-COD | 1944580000 | C.12 |
| SAIBW-M-5/8 M12 B-COD | 1944580000 | D.17 |
| SAIBW-M-5/8 M12 B-COD | 1944580000 | D.5 |
| SAIBW-M8-3P(TL) | 1920970000 | D.22 |
| SAIBW-M8-3P(TL) | 1920970000 | D.6 |
| SAIBW-M8-4P(TL) | 1920980000 | D.22 |
| SAIBW-M8-4P(TL) | 1920980000 | D.6 |
| SAIE-7/8"B-3-0.2U-H | 1292390000 | E.8 |
| SAIE-7/8"B-3-0.2U-PG11 | 1292370000 | E.9 |
| SAIE-7/8"B-3-0.2U-PG13.5 | 1292380000 | E.10 |
| SAIE-7/8"B-4-0.2U-H | 1292450000 | E.8 |
| SAIE-7/8"B-4-0.2U-PG11 | 1292430000 | E.9 |
| SAIE-7/8"B-4-0.2U-PG13.5 | 1292440000 | E.10 |
| SAIE-7/8"B-5-0.2U-H | 1292520000 | E.8 |
| SAIE-7/8"B-5-0.2U-PG11 | 1292500000 | E.9 |
| SAIE-7/8"B-5-0.2U-PG13.5 | 1292510000 | E.10 |
| SAIE-7/8"S-3-0.2U-H | 1292350000 | E.8 |
| SAIE-7/8"S-3-0.2U-PG11 | 1292330000 | E.9 |
| SAIE-7/8"S-3-0.2U-PG13.5 | 1292340000 | E.10 |
| SAIE-7/8"S-4-0.2U-H | 1292420000 | E.8 |
| SAIE-7/8"S-4-0.2U-PG11 | 1292400000 | E.9 |
| SAIE-7/8"S-4-0.2U-PG13.5 | 1292410000 | E.10 |
| SAIE-7/8"S-5-0.2-PG11 | 1292470000 | E.9 |
| SAIE-7/8"S-5-0.2U-H | 1292490000 | E.8 |
| SAIE-7/8"S-5-0.2U-PG13.5 | 1292480000 | E.10 |
| SAIE-EW-M20/PG9-SW24-VA | 1950270000 | C.33 |
| SAIE-M12B-4-0.5U P9 1.5 | 1353780000 | D.34 |
| SAIE-M12B-4-0.5U-FP-M16 | 1861190000 | D.33 |
| SAIE-M12B-4-0.5U-M16 | 1861120000 | D.33 |
| SAIE-M12B-4-0.5U-PG9 | 1861250000 | D.35 |
| SAIE-M12B-5-0.5U-FP-M16 | 1856110000 | D.33 |
| SAIE-M12B-5-0.5U-M16 | 1836910000 | D.33 |
| SAIE-M12B-5-0.5U-PG9 | 1814890000 | D.35 |
| SAIE-M12B-5-LP | 1312970000 | D.37 |
| SAIE-M12B-8-0,5U-M16 | 1861140000 | D.33 |
| SAIE-M12B-8-0.5U-FP-M16 | 1861210000 | D.33 |
| SAIE-M12B-8-0.5U-PG9 | 1861270000 | D.35 |
| SAIE-M12B-PB-0.5U HW | 1279480050 | C.10 |
| SAIE-M12B-PB-1.0U HW | 1279480100 | C.10 |
| SAIE-M12B-PB-2.0U HW | 1279480200 | C.10 |
| SAIE-M12S-4-0.5U P9 1.5 | 1353770000 | D.34 |
| SAIE-M12S-4-0.5U-AEH-VA | 1861220001 | C.33 |
| SAIE-M12S-4-0.5U-FP-M16 | 1861160000 | D.33 |
| SAIE-M12S-4-0.5U-M16 | 1861090000 | D.33 |
| SAIE-M12S-4-0.5U-PG9 | 1861220000 | D.35 |
| SAIE-M12S-5-0.5U-FP-M16 | 1861170000 | D.33 |
| SAIE-M12S-5-0.5U-M16 | 1861230000 | D.33 |
| SAIE-M12S-5-0.5U-PG9 | 1856120000 | D.35 |
| SAIE-M12S-5-LP | 1312980000 | D.37 |
| SAIE-M12S-5S0.5U HW | 1341230050 | D.38 |
| SAIE-M12S-8-0.5U-FP-M16 | 1861180000 | D.33 |
| SAIE-M12S-8-0.5U-M16 | 1861110000 | D.33 |
| SAIE-M12S-8-0.5U-PG9 | 1861240000 | D.35 |
| SAIE-M12S-8S0.5U HW | 1341240050 | D.38 |
| SAIE-M16B-4-L | 1326720000 | D.39 |
| SAIE-M16B-5-L | 1326730000 | D.39 |
| SAIE-M16B-7-L | 1326740000 | D.39 |
| SAIE-M16S-5-HWM | 1269790000 | D.39 |
| SAIE-M23-L-EM | 1170320000 | J.27 |
| SAIE-M23-L-HW | 1170340000 | J.27 |
| SAIE-M23-L-RM | 1170310000 | J.27 |
| SAIE-M23-L-VW | 1170300000 | J.27 |
| SAIE-M23-L-W | 1170330000 | J.27 |
| SAIE-M23-S-EM | 1169970000 | J.13 |
| SAIE-M23-S-HW | 1169990000 | J.13 |
| SAIE-M23-S-RM | 1169950000 | J.13 |
| SAIE-M23-S-VW | 1169940000 | J.13 |
| SAIE-M23-S-W | 1169980000 | J.13 |
| SAIE-M5B-3-0.2U | 1873060000 | D.36 |
| SAIE-M5B-4-0.2U | 1873040000 | D.36 |
| SAIE-M5S-3-0.2U | 1873050000 | D.36 |
| SAIE-M5S-4-0.2U | 1873030000 | D.36 |
| SAIE-M8B-3-0.5U-FP-M8 | 1856130000 | D.36 |
| SAIE-M8B-4-0.5U-FP-M8 | 1856140000 | D.36 |
| SAIE-M8R-3-0.5U-FP-M8 | 1861280000 | D.35 |

| Type | Order No. | Page |
|---|---|---|
| SAIE-M8R-4-0.5U-FP-M8 | 1861290000 | D.35 |
| SAIE-M8S-3-0.5U-FP-M8 | 1078730000 | D.36 |
| SAIE-M8S-4-0.5U-FP-M8 | 1078720000 | D.36 |
| SAIEND CAN M8 4P | 1955340000 | C.65 |
| SAIEND CAN M8 4P | 1955340000 | F.23 |
| SAIEND CAN M8 4P | 1955340000 | F.25 |
| SAIEND CAN M8 4P | 1955340000 | F.27 |
| SAIEND CAN-M12 5P A-COD | 1784760000 | F.14 |
| SAIEND PB M12 5P B-COD | 1784770000 | F.10 |
| SAIH-PB-2X0.24-PUR | 1232620000 | C.8 |
| SAIH-PB-2X0.34-PVC | 1933640000 | C.9 |
| SAIH-PB-PA-2X1.0-PVC-BL | 1232630000 | C.30 |
| SAIH-PB-PA-2X1.0-PVC-SW | 1232640000 | C.30 |
| SAIH-SLL-3x0,25mm²(PUR) | 1902140000 | B.56 |
| SAIH-SLL-3x0,25mm²(PVC) | 1902190000 | B.56 |
| SAIH-SLL-3x0,34mm²(PUR) | 1902110000 | B.56 |
| SAIH-SLL-3x0,34mm²(PVC) | 1902160000 | B.56 |
| SAIH-SLL-3x0,75-8x0,34 | 9457420000 | B.57 |
| SAIH-SLL-3X0.34 SI PUR | 1357320000 | B.56 |
| SAIH-SLL-3X0.34-UGE | 1345520000 | B.56 |
| SAIH-SLL-3X0.75-16X0.34 | 9457560000 | B.57 |
| SAIH-SLL-3X1.0-16X0.5 | 1344720000 | B.57 |
| SAIH-SLL-4x0,25mm²(PUR) | 1902120000 | B.56 |
| SAIH-SLL-4x0,25mm²(PVC) | 1902170000 | B.56 |
| SAIH-SLL-4x0,34mm²(PUR) | 1902130000 | B.56 |
| SAIH-SLL-4x0,34mm²(PVC) | 1902180000 | B.56 |
| SAIH-SLL-4X0.34 SI PUR | 1357330000 | B.56 |
| SAIH-SLL-4X0.34-UGE | 1345530000 | B.56 |
| SAIH-SLL-5X0,75-16X0,34 | 9457970000 | B.57 |
| SAIH-SLL-5X0.34 SI PUR | 1357340000 | B.56 |
| SAIH-SLL-5X0.34-UGE | 1345540000 | B.56 |
| SAIL-7/8"BG-3-1.5U | 1292100150 | E.11 |
| SAIL-7/8"BG-4-1.5U | 1292140150 | E.11 |
| SAIL-7/8"BG-5-1.5U | 1292190150 | E.11 |
| SAIL-7/8"BW-3-1.5U | 1292110150 | E.11 |
| SAIL-7/8"BW-4-1.5U | 1292150150 | E.11 |
| SAIL-7/8"BW-5-1.5U | 1292200150 | E.11 |
| SAIL-7/8"G-3-1.5U | 1292080150 | E.11 |
| SAIL-7/8"G-4-1.5U | 1292120150 | E.11 |
| SAIL-7/8"G-5-1.5U | 1292170150 | E.11 |
| SAIL-7/8"W-3-1.5U | 1292090150 | E.11 |
| SAIL-7/8"W-4-1.5U | 1292130150 | E.11 |
| SAIL-7/8"W-5-1.5U | 1292180150 | E.11 |
| SAIL-M12BG-12-1.5U | 1879710150 | B.14 |
| SAIL-M12BG-3-1.5UGE | 1092910150 | B.11 |
| SAIL-M12BG-3-1.5T | 1968590150 | B.11 |
| SAIL-M12BG-3-1.5U | 9457820150 | B.11 |
| SAIL-M12BG-3-1.5U | 9457820150 | B.6 |
| SAIL-M12BG-3-1.5V | 1925570150 | B.11 |
| SAIL-M12BG-3-1.5V | 1925570150 | B.6 |
| SAIL-M12BG-3-10U | 9457821000 | B.6 |
| SAIL-M12BG-3-10V | 1925571000 | B.6 |
| SAIL-M12BG-3-3.0U | 9457820300 | B.6 |
| SAIL-M12BG-3-3.0V | 1925570300 | B.6 |
| SAIL-M12BG-3-5.0U | 9457820500 | B.6 |
| SAIL-M12BG-3-5.0V | 1925570500 | B.6 |
| SAIL-M12BG-3-X.XU | 9457820000 | B.6 |
| SAIL-M12BG-3-X.XV | 1925570000 | B.6 |
| SAIL-M12BG-3B-1.5U | 1057740150 | B.43 |
| SAIL-M12BG-3S1.5U | 1867410150 | B.17 |
| SAIL-M12BG-4-1.5UGE | 1092920150 | B.11 |
| SAIL-M12BG-4-1.5T | 1968580150 | B.11 |
| SAIL-M12BG-4-1.5U | 9457730150 | B.11 |
| SAIL-M12BG-4-1.5U | 9457730150 | B.6 |
| SAIL-M12BG-4-1.5V | 1925580150 | B.11 |
| SAIL-M12BG-4-1.5V | 1925580150 | B.6 |
| SAIL-M12BG-4-10U | 9457731000 | B.6 |
| SAIL-M12BG-4-10V | 1925581000 | B.6 |
| SAIL-M12BG-4-3.0U | 9457730300 | B.6 |
| SAIL-M12BG-4-3.0V | 1925580300 | B.6 |
| SAIL-M12BG-4-5.0U | 9457730500 | B.6 |
| SAIL-M12BG-4-5.0V | 1925580500 | B.6 |
| SAIL-M12BG-4-X.XU | 9457730000 | B.6 |
| SAIL-M12BG-4-X.XV | 1925580000 | B.6 |
| SAIL-M12BG-4B-1.5U | 1057750150 | B.43 |
| SAIL-M12BG-4S1.5U | 1812540150 | B.17 |
| SAIL-M12BG-5-1.5UGE | 1092930150 | B.11 |
| SAIL-M12BG-5-1.5T | 1021670150 | B.11 |
| SAIL-M12BG-5-1.5U | 9457910150 | B.11 |
| SAIL-M12BG-5-1.5U | 9457910150 | B.7 |
| SAIL-M12BG-5-1.5V | 1925590150 | B.11 |
| SAIL-M12BG-5-1.5V | 1925590150 | B.7 |
| SAIL-M12BG-5-10U | 9457911000 | B.7 |
| SAIL-M12BG-5-10V | 1925591000 | B.7 |
| SAIL-M12BG-5-3.0U | 9457910300 | B.7 |
| SAIL-M12BG-5-3.0V | 1925590300 | B.7 |
| SAIL-M12BG-5-5.0U | 9457910500 | B.7 |
| SAIL-M12BG-5-5.0V | 1925590500 | B.7 |
| SAIL-M12BG-5-X.XU | 9457910000 | B.7 |
| SAIL-M12BG-5-X.XV | 1925590000 | B.7 |
| SAIL-M12BG-5B-1.5U | 1061880150 | B.43 |
| SAIL-M12BG-5S1.5U | 9456140150 | B.17 |
| SAIL-M12BG-8-1.5U | 1865870150 | B.14 |
| SAIL-M12BG-8S1.5U | 1890520150 | B.15 |
| SAIL-M12BG-CD-1.5A | 1964690150 | C.62 |
| SAIL-M12BG-CD-1.5B | 1060120150 | C.62 |
| SAIL-M12BG-PB-1.5D | 1873320150 | C.6 |
| SAIL-M12BW-12-1.5U | 1898240150 | B.14 |
| SAIL-M12BW-3-1.5UGE | 1092940150 | B.11 |

| Type | Order No. | Page |
|---|---|---|
| SAIL-M12BW-3-1.5T | 1968560150 | B.11 |
| SAIL-M12BW-3-1.5U | 9457320150 | B.11 |
| SAIL-M12BW-3-1.5U | 9457320150 | B.7 |
| SAIL-M12BW-3-1.5V | 1925630150 | B.11 |
| SAIL-M12BW-3-1.5V | 1925630150 | B.7 |
| SAIL-M12BW-3-10U | 9457321000 | B.7 |
| SAIL-M12BW-3-10V | 1925631000 | B.7 |
| SAIL-M12BW-3-3.0U | 9457320300 | B.7 |
| SAIL-M12BW-3-3.0V | 1925630300 | B.7 |
| SAIL-M12BW-3-5.0U | 9457320500 | B.7 |
| SAIL-M12BW-3-5.0V | 1925630500 | B.7 |
| SAIL-M12BW-3-X.XU | 9457320000 | B.7 |
| SAIL-M12BW-3-X.XV | 1925630000 | B.7 |
| SAIL-M12BW-3B-1.5U | 1061890150 | B.43 |
| SAIL-M12BW-3L1.5UGE | 1114880150 | B.16 |
| SAIL-M12BW-3L1.5U | 9457800150 | B.16 |
| SAIL-M12BW-3L1.5U | 9457800150 | B.8 |
| SAIL-M12BW-3L1.5V | 1925460150 | B.16 |
| SAIL-M12BW-3L1.5V | 1925460150 | B.8 |
| SAIL-M12BW-3L10U | 9457801000 | B.8 |
| SAIL-M12BW-3L10V | 1925461000 | B.8 |
| SAIL-M12BW-3L3.0U | 9457800300 | B.8 |
| SAIL-M12BW-3L3.0V | 1925460300 | B.8 |
| SAIL-M12BW-3L5.0U | 9457800500 | B.8 |
| SAIL-M12BW-3L5.0V | 1925460500 | B.8 |
| SAIL-M12BW-3LX.XU | 9457800000 | B.8 |
| SAIL-M12BW-3LX.XV | 1925460000 | B.8 |
| SAIL-M12BW-3S1.5U | 1906950150 | B.17 |
| SAIL-M12BW-4-1.5UGE | 1092960150 | B.11 |
| SAIL-M12BW-4-1.5T | 1968570150 | B.11 |
| SAIL-M12BW-4-1.5U | 9457740150 | B.11 |
| SAIL-M12BW-4-1.5U | 9457740150 | B.7 |
| SAIL-M12BW-4-1.5V | 1925640150 | B.11 |
| SAIL-M12BW-4-1.5V | 1925640150 | B.7 |
| SAIL-M12BW-4-10U | 9457741000 | B.7 |
| SAIL-M12BW-4-10V | 1925641000 | B.7 |
| SAIL-M12BW-4-2L1.5UGE | 1092950150 | B.16 |
| SAIL-M12BW-4-2L1.5U | 9456380150 | B.16 |
| SAIL-M12BW-4-2L1.5U | 9456380150 | B.8 |
| SAIL-M12BW-4-2L1.5V | 1925470150 | B.16 |
| SAIL-M12BW-4-2L1.5V | 1925470150 | B.8 |
| SAIL-M12BW-4-2L10U | 9456381000 | B.8 |
| SAIL-M12BW-4-2L10V | 1925471000 | B.8 |
| SAIL-M12BW-4-2L3.0U | 9456380300 | B.8 |
| SAIL-M12BW-4-2L3.0V | 1925470300 | B.8 |
| SAIL-M12BW-4-2L5.0U | 9456380500 | B.8 |
| SAIL-M12BW-4-2L5.0V | 1925470500 | B.8 |
| SAIL-M12BW-4-2LX.XU | 9456380000 | B.8 |
| SAIL-M12BW-4-2LX.XV | 1925470000 | B.8 |
| SAIL-M12BW-4-3.0U | 9457740300 | B.7 |
| SAIL-M12BW-4-3.0V | 1925640300 | B.7 |
| SAIL-M12BW-4-3L1.5U | 1963940150 | B.16 |
| SAIL-M12BW-4-3L1.5V | 1963960150 | B.16 |
| SAIL-M12BW-4-5.0U | 9457740500 | B.7 |
| SAIL-M12BW-4-5.0V | 1925640500 | B.7 |
| SAIL-M12BW-4-X.XV | 1925640000 | B.7 |
| SAIL-M12BW-4B-1.5U | 1061900150 | B.43 |
| SAIL-M12BW-4S1.5U | 1808970150 | B.17 |
| SAIL-M12BW-5-1.5UGE | 1092970150 | B.11 |
| SAIL-M12BW-5-1.5T | 1021690150 | B.11 |
| SAIL-M12BW-5-1.5U | 9457690150 | B.11 |
| SAIL-M12BW-5-1.5U | 9457690150 | B.7 |
| SAIL-M12BW-5-1.5V | 1925650150 | B.11 |
| SAIL-M12BW-5-1.5V | 1925650150 | B.7 |
| SAIL-M12BW-5-10U | 9457691000 | B.7 |
| SAIL-M12BW-5-10V | 1925651000 | B.7 |
| SAIL-M12BW-5-3.0U | 9457690300 | B.7 |
| SAIL-M12BW-5-3.0V | 1925650300 | B.7 |
| SAIL-M12BW-5-5.0U | 9457690500 | B.7 |
| SAIL-M12BW-5-5.0V | 1925650500 | B.7 |
| SAIL-M12BW-5-X.XU | 9457690000 | B.7 |
| SAIL-M12BW-5-X.XV | 1925650000 | B.7 |
| SAIL-M12BW-5B-1.5U | 1057760150 | B.43 |
| SAIL-M12BW-5S1.5U | 1906540150 | B.17 |
| SAIL-M12BW-8-1.5U | 1883460150 | B.14 |
| SAIL-M12BW-8S1.5U | 1275470150 | B.15 |
| SAIL-M12BW-CD-1.5A | 1061980150 | C.62 |
| SAIL-M12BW-CD-1.5B | 1062180150 | C.62 |
| SAIL-M12BW-PB-1.5D | 1062300150 | C.6 |
| SAIL-M12BW-PB-1.5E | 1062370150 | C.6 |
| SAIL-M12G-12-1.5U | 1311700150 | B.14 |
| SAIL-M12G-3-1.5UGE | 1092980150 | B.11 |
| SAIL-M12G-3-1.5T | 1021750150 | B.11 |
| SAIL-M12G-3-1.5U | 9457810150 | B.11 |
| SAIL-M12G-3-1.5U | 9457810150 | B.4 |
| SAIL-M12G-3-1.5V | 1925430150 | B.11 |
| SAIL-M12G-3-1.5V | 1925430150 | B.4 |
| SAIL-M12G-3-10U | 9457811000 | B.4 |
| SAIL-M12G-3-10V | 1925431000 | B.4 |
| SAIL-M12G-3-3.0U | 9457810300 | B.4 |
| SAIL-M12G-3-3.0V | 1925430300 | B.4 |
| SAIL-M12G-3-5.0U | 9457810500 | B.4 |
| SAIL-M12G-3-5.0V | 1925430500 | B.4 |
| SAIL-M12G-3-X.XU | 9457810000 | B.4 |
| SAIL-M12G-3-X.XV | 1925430000 | B.4 |
| SAIL-M12G-3B-1.5U | 1057770150 | B.43 |
| SAIL-M12G-3S1.5U | 1906470150 | B.17 |
| SAIL-M12G-4-1.5UGE | 1077750150 | B.11 |
| SAIL-M12G-4-1.5T | 1021770150 | B.11 |
| SAIL-M12G-4-1.5U | 9456100150 | B.11 |
| SAIL-M12G-4-1.5U | 9456100150 | B.4 |
| SAIL-M12G-4-1.5V | 1925440150 | B.11 |
| SAIL-M12G-4-1.5V | 1925440150 | B.4 |
| SAIL-M12G-4-10U | 9456101000 | B.4 |
| SAIL-M12G-4-10V | 1925441000 | B.4 |
| SAIL-M12G-4-3.0U | 9456100300 | B.4 |
| SAIL-M12G-4-3.0V | 1925440300 | B.4 |
| SAIL-M12G-4-5.0U | 9456100500 | B.4 |
| SAIL-M12G-4-5.0V | 1925440500 | B.4 |
| SAIL-M12G-4-X.XU | 9456100000 | B.4 |
| SAIL-M12G-4-X.XV | 1925440000 | B.4 |
| SAIL-M12G-4B-1.5U | 1057780150 | B.43 |
| SAIL-M12G-4S1.5U | 1906480150 | B.17 |
| SAIL-M12G-5-1.5UGE | 1092990150 | B.11 |
| SAIL-M12G-5-1.5T | 1021650150 | B.11 |
| SAIL-M12G-5-1.5U | 9457610150 | B.11 |
| SAIL-M12G-5-1.5U | 9457610150 | B.4 |
| SAIL-M12G-5-1.5V | 1925450150 | B.11 |
| SAIL-M12G-5-1.5V | 1925450150 | B.4 |
| SAIL-M12G-5-10U | 9457611000 | B.4 |
| SAIL-M12G-5-10V | 1925451000 | B.4 |
| SAIL-M12G-5-3.0U | 9457610300 | B.4 |
| SAIL-M12G-5-3.0V | 1925450300 | B.4 |
| SAIL-M12G-5-5.0U | 9457610500 | B.4 |
| SAIL-M12G-5-5.0V | 1925450500 | B.4 |
| SAIL-M12G-5-X.XU | 9457610000 | B.4 |
| SAIL-M12G-5-X.XV | 1925450000 | B.4 |
| SAIL-M12G-5B-1.5U | 1057790150 | B.43 |
| SAIL-M12G-5S1.5U | 1926690150 | B.17 |
| SAIL-M12G-8-1.5U | 1279410150 | B.14 |
| SAIL-M12G-8S1.5U | 1279430150 | B.15 |
| SAIL-M12G-CD-1.5A | 1964700150 | C.62 |
| SAIL-M12G-CD-1.5B | 1060110150 | C.62 |
| SAIL-M12G-PB-1.5D | 1873300150 | C.6 |
| SAIL-M12GM12G-2/4-1.5UGE | 1093000150 | B.26 |
| SAIL-M12GM12G-2/4-1.5U | 9456990150 | B.26 |
| SAIL-M12GM12G-2/4-1.5V | 1925330150 | B.26 |
| SAIL-M12GM12G-3-1.5UGE | 1093010150 | B.25 |
| SAIL-M12GM12G-3-1.5T | 1021710150 | B.25 |
| SAIL-M12GM12G-3-1.5U | 9457230150 | B.25 |
| SAIL-M12GM12G-3-1.5U | 9457230150 | B.6 |
| SAIL-M12GM12G-3-1.5V | 1925300150 | B.25 |
| SAIL-M12GM12G-3-1.5V | 1925300150 | B.6 |
| SAIL-M12GM12G-3-10U | 9457231000 | B.6 |
| SAIL-M12GM12G-3-10V | 1925301000 | B.6 |
| SAIL-M12GM12G-3-3.0U | 9457230300 | B.6 |
| SAIL-M12GM12G-3-3.0V | 1925300300 | B.6 |
| SAIL-M12GM12G-3-5.0U | 9457230500 | B.6 |
| SAIL-M12GM12G-3-5.0V | 1925300500 | B.6 |
| SAIL-M12GM12G-3-X.XU | 9457230000 | B.6 |
| SAIL-M12GM12G-3-X.XV | 1925300000 | B.6 |
| SAIL-M12GM12G-3-X.XV | 1815670500 | B.7 |
| SAIL-M12GM12G-3-X.XV | 1283550000 | D.33 |
| SAIL-M12GM12G-3-X.XV | 1224030000 | J.20 |
| SAIL-M12GM12G-3B-1.5U | 1057830150 | B.44 |
| SAIL-M12GM12G-3S1.5U | 1058490150 | B.28 |
| SAIL-M12GM12G-4-0.3U | 1906300030 | H.7 |
| SAIL-M12GM12G-4-0.5U | 1906300050 | H.7 |
| SAIL-M12GM12G-4-1.5UGE | 1093020150 | B.25 |
| SAIL-M12GM12G-4-1.5T | 1021730150 | B.25 |
| SAIL-M12GM12G-4-1.5U | 1906300150 | B.25 |
| SAIL-M12GM12G-4-1.5U | 1906300150 | B.6 |
| SAIL-M12GM12G-4-1.5U | 1906300150 | H.7 |
| SAIL-M12GM12G-4-1.5V | 1925310150 | B.25 |
| SAIL-M12GM12G-4-1.5V | 1925310150 | B.6 |
| SAIL-M12GM12G-4-10U | 1906301000 | B.6 |
| SAIL-M12GM12G-4-10V | 1925311000 | B.6 |
| SAIL-M12GM12G-4-3.0U | 1906300300 | B.6 |
| SAIL-M12GM12G-4-3.0V | 1925310300 | B.6 |
| SAIL-M12GM12G-4-5.0U | 1906300500 | B.6 |
| SAIL-M12GM12G-4-5.0V | 1925310500 | B.6 |
| SAIL-M12GM12G-4-X.XU | 1906300000 | B.6 |
| SAIL-M12GM12G-4-X.XV | 1925310000 | B.6 |
| SAIL-M12GM12G-4-X.XV | 1815671000 | B.7 |
| SAIL-M12GM12G-4-X.XV | 1289140000 | D.33 |
| SAIL-M12GM12G-4B-1.5U | 1057840150 | B.44 |
| SAIL-M12GM12G-4S1.5U | 1058500150 | B.28 |
| SAIL-M12GM12G-5-0.3U | 9457340030 | H.7 |
| SAIL-M12GM12G-5-0.6U | 9457340060 | H.7 |
| SAIL-M12GM12G-5-1.5UGE | 1093030150 | B.25 |
| SAIL-M12GM12G-5-1.5T | 1011970150 | B.25 |
| SAIL-M12GM12G-5-1.5U | 9457340150 | B.25 |
| SAIL-M12GM12G-5-1.5U | 9457340150 | B.7 |
| SAIL-M12GM12G-5-1.5U | 9457340150 | H.7 |
| SAIL-M12GM12G-5-1.5V | 1925320150 | B.25 |
| SAIL-M12GM12G-5-1.5V | 1925320150 | B.7 |
| SAIL-M12GM12G-5-10U | 9457341000 | B.7 |
| SAIL-M12GM12G-5-10V | 1925321000 | B.7 |
| SAIL-M12GM12G-5-3.0U | 9457340300 | B.7 |
| SAIL-M12GM12G-5-3.0V | 1925320300 | B.7 |
| SAIL-M12GM12G-5-5.0U | 9457340500 | B.7 |
| SAIL-M12GM12G-5-5.0V | 1925320500 | B.7 |
| SAIL-M12GM12G-5-X.XU | 9457340000 | B.7 |
| SAIL-M12GM12G-5-X.XU | 9457740000 | B.7 |
| SAIL-M12GM12G-5-X.XV | 1925320000 | B.7 |
| SAIL-M12GM12G-5-X.XV | 1291870000 | E.6 |
| SAIL-M12GM12G-5-X.XV | 1816610000 | I.7 |
| SAIL-M12GM12G-5B-1.5U | 1057850150 | B.44 |
| SAIL-M12GM12G-5S1.5U | 1058510150 | B.28 |
| SAIL-M12GM12G-8-1.5U | 1279440150 | B.14 |
| SAIL-M12GM12G-8S1.5U | 1279460150 | B.15 |
| SAIL-M12GM12G-CD-1.5A | 1964710150 | C.63 |
| SAIL-M12GM12G-CD-1.5B | 1060130150 | C.63 |
| SAIL-M12GM12G-PB-1.5D | 1873310150 | C.7 |
| SAIL-M12GM12W-2/4-1.5UGE | 1093040150 | B.26 |
| SAIL-M12GM12W-2/4-1.5U | 9457890150 | B.26 |
| SAIL-M12GM12W-2/4-1.5V | 1925370150 | B.26 |
| SAIL-M12GM12W-3-1.5UGE | 1093050150 | B.25 |
| SAIL-M12GM12W-3-1.5T | 1021720150 | B.25 |
| SAIL-M12GM12W-3-1.5U | 9457390150 | B.25 |
| SAIL-M12GM12W-3-1.5U | 9457390150 | B.7 |
| SAIL-M12GM12W-3-1.5V | 1925340150 | B.25 |
| SAIL-M12GM12W-3-1.5V | 1925340150 | B.7 |
| SAIL-M12GM12W-3-10U | 9457391000 | B.7 |
| SAIL-M12GM12W-3-10V | 1925341000 | B.7 |
| SAIL-M12GM12W-3-3.0U | 9457390300 | B.7 |
| SAIL-M12GM12W-3-3.0V | 1925340300 | B.7 |
| SAIL-M12GM12W-3-5.0U | 9457390500 | B.7 |
| SAIL-M12GM12W-3-5.0V | 1925340500 | B.7 |
| SAIL-M12GM12W-3-X.XU | 9457390000 | B.7 |
| SAIL-M12GM12W-3-X.XV | 1925340000 | B.7 |
| SAIL-M12GM12W-3-X.XV | 1291880000 | E.7 |
| SAIL-M12GM12W-3-X.XV | 1818090100 | J.30 |
| SAIL-M12GM12W-3B-1.5U | 1057900150 | B.44 |
| SAIL-M12GM12W-3L1.5U | 9457790150 | B.27 |
| SAIL-M12GM12W-3L1.5U | 9457790150 | B.8 |
| SAIL-M12GM12W-3L1.5V | 1925410150 | B.27 |
| SAIL-M12GM12W-3L1.5V | 1925410150 | B.8 |
| SAIL-M12GM12W-3L10U | 9457791000 | B.8 |
| SAIL-M12GM12W-3L10V | 1925411000 | B.8 |
| SAIL-M12GM12W-3L3.0U | 9457790300 | B.8 |
| SAIL-M12GM12W-3L3.0V | 1925410300 | B.8 |
| SAIL-M12GM12W-3L5.0U | 9457790500 | B.8 |
| SAIL-M12GM12W-3L5.0V | 1925410500 | B.8 |
| SAIL-M12GM12W-3LX.XU | 9457790000 | B.8 |
| SAIL-M12GM12W-3LX.XV | 1925410000 | B.8 |
| SAIL-M12GM12W-3LX.XV | 1291940000 | E.7 |
| SAIL-M12GM12W-3S1.5U | 1059470150 | B.28 |
| SAIL-M12GM12W-4-1.5UGE | 1093070150 | B.25 |
| SAIL-M12GM12W-4-1.5T | 1021740150 | B.25 |
| SAIL-M12GM12W-4-1.5U | 9457310150 | B.25 |
| SAIL-M12GM12W-4-1.5U | 9457310150 | B.7 |
| SAIL-M12GM12W-4-1.5V | 1925350150 | B.25 |
| SAIL-M12GM12W-4-1.5V | 1925350150 | B.7 |
| SAIL-M12GM12W-4-10U | 9457311000 | B.7 |
| SAIL-M12GM12W-4-10V | 1925351000 | B.7 |
| SAIL-M12GM12W-4-2L1.5U | 1906410150 | B.27 |
| SAIL-M12GM12W-4-2L1.5U | 1906410150 | B.8 |
| SAIL-M12GM12W-4-2L1.5V | 1925420150 | B.27 |
| SAIL-M12GM12W-4-2L1.5V | 1925420150 | B.8 |
| SAIL-M12GM12W-4-2L10U | 1906411000 | B.8 |
| SAIL-M12GM12W-4-2L10V | 1925421000 | B.8 |
| SAIL-M12GM12W-4-2L3.0U | 1906410300 | B.8 |
| SAIL-M12GM12W-4-2L3.0V | 1925420300 | B.8 |
| SAIL-M12GM12W-4-2L5.0U | 1906410500 | B.8 |
| SAIL-M12GM12W-4-2L5.0V | 1925420500 | B.8 |
| SAIL-M12GM12W-4-2LX.XU | 1906410000 | B.8 |
| SAIL-M12GM12W-4-2LX.XV | 1925420000 | B.8 |
| SAIL-M12GM12W-4-2LX.XV | 1291950000 | E.7 |
| SAIL-M12GM12W-4-3.0U | 9457310300 | B.7 |
| SAIL-M12GM12W-4-3.0V | 1925350300 | B.7 |
| SAIL-M12GM12W-4-3L1.5U | 1963910150 | B.27 |
| SAIL-M12GM12W-4-3L1.5V | 1963930150 | B.27 |
| SAIL-M12GM12W-4-3LW1.5UGE | 1093060150 | B.27 |
| SAIL-M12GM12W-4-3LW1.5T | 1020930150 | B.27 |
| SAIL-M12GM12W-4-5.0U | 9457310500 | B.7 |
| SAIL-M12GM12W-4-5.0V | 1925350500 | B.7 |
| SAIL-M12GM12W-4-X.XU | 9457310000 | B.7 |
| SAIL-M12GM12W-4-X.XV | 1925350000 | B.7 |
| SAIL-M12GM12W-4-X.XV | 1291890000 | E.6 |
| SAIL-M12GM12W-4-X.XV | 1818140100 | J.30 |
| SAIL-M12GM12W-4B-1.5U | 1057910150 | B.44 |
| SAIL-M12GM12W-4S1.5U | 1059480150 | B.28 |
| SAIL-M12GM12W-5-1.5UGE | 1093080150 | B.25 |
| SAIL-M12GM12W-5-1.5T | 1011990150 | B.25 |
| SAIL-M12GM12W-5-1.5U | 9457270150 | B.25 |
| SAIL-M12GM12W-5-1.5U | 9457270150 | B.7 |
| SAIL-M12GM12W-5-1.5V | 1925360150 | B.25 |
| SAIL-M12GM12W-5-1.5V | 1925360150 | B.7 |
| SAIL-M12GM12W-5-10U | 9457271000 | B.7 |
| SAIL-M12GM12W-5-10V | 1925361000 | B.7 |
| SAIL-M12GM12W-5-3.0U | 9457270300 | B.7 |
| SAIL-M12GM12W-5-3.0V | 1925360300 | B.7 |
| SAIL-M12GM12W-5-5.0U | 9457270500 | B.7 |
| SAIL-M12GM12W-5-5.0V | 1925360500 | B.7 |
| SAIL-M12GM12W-5-X.XU | 9457270000 | B.7 |
| SAIL-M12GM12W-5-X.XV | 1925360000 | B.7 |
| SAIL-M12GM12W-5-X.XV | 1291900000 | E.7 |
| SAIL-M12GM12W-5B-1.5U | 1057920150 | B.44 |
| SAIL-M12GM12W-5S1.5U | 1059540150 | B.28 |
| SAIL-M12GM12W-8-1.5U | 1279450150 | B.14 |
| SAIL-M12GM12W-8S1.5U | 1279470150 | B.15 |
| SAIL-M12GM12W-CD-1.5A | 1061990150 | C.63 |
| SAIL-M12GM12W-CD-1.5B | 1062190150 | C.63 |
| SAIL-M12GM12W-PB-1.5D | 1062310150 | C.7 |
| SAIL-M12GM12W-PB-1.5E | 1062380150 | C.7 |
| SAIL-M12GM8G-3-1.5U | 9457770150 | B.29 |
| SAIL-M12GM8G-3-1.5U | 9457770150 | B.4 |
| SAIL-M12GM8G-3-1.5V | 1938170150 | B.29 |
| SAIL-M12GM8G-3-1.5V | 1938170150 | B.4 |
| SAIL-M12GM8G-3-10U | 9457771000 | B.4 |
| SAIL-M12GM8G-3-10V | 1938171000 | B.4 |
| SAIL-M12GM8G-3-3.0U | 9457770300 | B.4 |
| SAIL-M12GM8G-3-3.0V | 1938170300 | B.4 |
| SAIL-M12GM8G-3-5.0U | 9457770500 | B.4 |
| SAIL-M12GM8G-3-5.0V | 1938170500 | B.4 |
| SAIL-M12GM8G-3-X.XU | 9457770000 | B.4 |
| SAIL-M12GM8G-3-X.XV | 1938170000 | B.4 |
| SAIL-M12GM8G-4-1.5U | 9456660150 | B.29 |
| SAIL-M12GM8G-4-1.5U | 9456660150 | B.5 |
| SAIL-M12GM8G-4-1.5V | 1938200150 | B.29 |
| SAIL-M12GM8G-4-1.5V | 1938200150 | B.5 |
| SAIL-M12GM8G-4-10U | 9456661000 | B.5 |
| SAIL-M12GM8G-4-10V | 1938201000 | B.5 |
| SAIL-M12GM8G-4-3.0U | 9456660300 | B.5 |
| SAIL-M12GM8G-4-3.0V | 1938200300 | B.5 |
| SAIL-M12GM8G-4-5.0U | 9456660500 | B.5 |
| SAIL-M12GM8G-4-5.0V | 1938200500 | B.5 |
| SAIL-M12GM8G-4-X.XU | 9456660000 | B.5 |
| SAIL-M12GM8G-4-X.XV | 1938200000 | B.5 |
| SAIL-M12GM8GR-3-1.5U | 1984530150 | B.30 |
| SAIL-M12GM8W-3-1.5U | 9457980150 | B.29 |
| SAIL-M12GM8W-3-1.5U | 9457980150 | B.5 |
| SAIL-M12GM8W-3-1.5V | 1938180150 | B.29 |
| SAIL-M12GM8W-3-1.5V | 1938180150 | B.5 |
| SAIL-M12GM8W-3-10U | 9457981000 | B.5 |
| SAIL-M12GM8W-3-10V | 1938181000 | B.5 |
| SAIL-M12GM8W-3-3.0U | 9457980300 | B.5 |
| SAIL-M12GM8W-3-3.0V | 1938180300 | B.5 |
| SAIL-M12GM8W-3-5.0U | 9457980500 | B.5 |
| SAIL-M12GM8W-3-5.0V | 1938180500 | B.5 |
| SAIL-M12GM8W-3-X.XU | 9457980000 | B.5 |
| SAIL-M12GM8W-3-X.XV | 1938180000 | B.5 |
| SAIL-M12GM8W-3L1.5UGE | 1093110150 | B.31 |
| SAIL-M12GM8W-3L1.5U | 9457760150 | B.31 |
| SAIL-M12GM8W-3L1.5U | 9457760150 | B.5 |
| SAIL-M12GM8W-3L1.5V | 1962290150 | B.31 |
| SAIL-M12GM8W-3L10U | 9457761000 | B.5 |
| SAIL-M12GM8W-3L3.0U | 9457760300 | B.5 |
| SAIL-M12GM8W-3L5.0U | 9457760500 | B.5 |
| SAIL-M12GM8W-3LX.XU | 9457760000 | B.5 |
| SAIL-M12GM8W-4-1.5U | 9456670150 | B.29 |
| SAIL-M12GM8W-4-1.5U | 9456670150 | B.5 |
| SAIL-M12GM8W-4-1.5V | 1938210150 | B.29 |
| SAIL-M12GM8W-4-1.5V | 1938210150 | B.5 |
| SAIL-M12GM8W-4-10U | 9456671000 | B.5 |
| SAIL-M12GM8W-4-10V | 1938211000 | B.5 |
| SAIL-M12GM8W-4-3.0U | 9456670300 | B.5 |
| SAIL-M12GM8W-4-3.0V | 1938210300 | B.5 |
| SAIL-M12GM8W-4-5.0U | 9456670500 | B.5 |
| SAIL-M12GM8W-4-5.0V | 1938210500 | B.5 |
| SAIL-M12GM8W-4-X.XU | 9456670000 | B.5 |
| SAIL-M12GM8W-4-X.XV | 1938210000 | B.5 |
| SAIL-M12GM8W-4L1.5UGE | 1093130150 | B.31 |
| SAIL-M12GM8W-4L1.5U | 1906430150 | B.31 |
| SAIL-M12GM8W-4L1.5V | 1962300150 | B.31 |
| SAIL-M12GM8WR-3-1.5UGE | 1093150150 | B.30 |
| SAIL-M12GM8WR-3-1.5U | 9457570150 | B.30 |
| SAIL-M12W-12-1.5U | 1311690150 | B.14 |
| SAIL-M12W-3-1.5UGE | 1093160150 | B.11 |
| SAIL-M12W-3-1.5T | 1021760150 | B.11 |
| SAIL-M12W-3-1.5U | 9456690150 | B.11 |
| SAIL-M12W-3-1.5U | 9456690150 | B.4 |
| SAIL-M12W-3-1.5V | 1925510150 | B.11 |
| SAIL-M12W-3-1.5V | 1925510150 | B.4 |
| SAIL-M12W-3-10U | 9456691000 | B.4 |
| SAIL-M12W-3-10V | 1925511000 | B.4 |
| SAIL-M12W-3-3.0U | 9456690300 | B.4 |
| SAIL-M12W-3-3.0V | 1925510300 | B.4 |
| SAIL-M12W-3-5.0U | 9456690500 | B.4 |
| SAIL-M12W-3-5.0V | 1925510500 | B.4 |
| SAIL-M12W-3-X.XU | 9456690000 | B.4 |
| SAIL-M12W-3-X.XV | 1925510000 | B.4 |
| SAIL-M12W-3B-1.5U | 1057800150 | B.43 |
| SAIL-M12W-3S1.5U | 1906500150 | B.17 |
| SAIL-M12W-4-1.5UGE | 1093170150 | B.11 |
| SAIL-M12W-4-1.5T | 1021790150 | B.11 |
| SAIL-M12W-4-1.5U | 1906260150 | B.11 |
| SAIL-M12W-4-1.5U | 1906260150 | B.4 |
| SAIL-M12W-4-1.5V | 1925520150 | B.11 |
| SAIL-M12W-4-1.5V | 1925520150 | B.4 |
| SAIL-M12W-4-10U | 1906261000 | B.4 |
| SAIL-M12W-4-10V | 1925521000 | B.4 |
| SAIL-M12W-4-3.0U | 1906260300 | B.4 |
| SAIL-M12W-4-3.0V | 1925520300 | B.4 |
| SAIL-M12W-4-5.0U | 1906260500 | B.4 |
| SAIL-M12W-4-5.0V | 1925520500 | B.4 |
| SAIL-M12W-4-X.XU | 1906260000 | B.4 |
| SAIL-M12W-4-X.XV | 1925520000 | B.4 |
| SAIL-M12W-4B-1.5U | 1057810150 | B.43 |
| SAIL-M12W-4S1.5U | 1059650150 | B.17 |
| SAIL-M12W-5-1.5UGE | 1093180150 | B.11 |
| SAIL-M12W-5-1.5T | 1021660150 | B.11 |
| SAIL-M12W-5-1.5U | 9457670150 | B.11 |
| SAIL-M12W-5-1.5U | 9457670150 | B.4 |
| SAIL-M12W-5-1.5V | 1925530150 | B.11 |

| Type | Order No. | Page |
|---|---|---|
| SAIL-M12W-5-1.5V | 1925530150 | B.4 |
| SAIL-M12W-5-10U | 9457671000 | B.4 |
| SAIL-M12W-5-10V | 1925531000 | B.4 |
| SAIL-M12W-5-3.0U | 9457670300 | B.4 |
| SAIL-M12W-5-3.0V | 1925530300 | B.4 |
| SAIL-M12W-5-5.0U | 9457670500 | B.4 |
| SAIL-M12W-5-5.0V | 1925530500 | B.4 |
| SAIL-M12W-5-X.XU | 9457670000 | B.4 |
| SAIL-M12W-5-X.XV | 1925530000 | B.4 |
| SAIL-M12W-5B-1.5U | 1057820150 | B.43 |
| SAIL-M12W-5S1.5U | 1906520150 | B.17 |
| SAIL-M12W-8-1.5U | 1279420150 | B.14 |
| SAIL-M12W-8S1.5U | 1276060150 | B.15 |
| SAIL-M12W-CD-1.5A | 1062220150 | C.62 |
| SAIL-M12W-CD-1.5B | 1062170150 | C.62 |
| SAIL-M12W-PB-1.5D | 1061970150 | C.6 |
| SAIL-M12W-PB-1.5E | 1062340150 | C.6 |
| SAIL-M12WM12G-3-1.5U | 1821050150 | B.6 |
| SAIL-M12WM12G-3-10U | 1821051000 | B.6 |
| SAIL-M12WM12G-3-3.0U | 1821050300 | B.6 |
| SAIL-M12WM12G-3-5.0U | 1821050500 | B.6 |
| SAIL-M12WM12G-3-X.XU | 1815670150 | B.25 |
| SAIL-M12WM12G-3-X.XU | 1821050000 | B.6 |
| SAIL-M12WM12G-3-X.XU | 1279490200 | C.10 |
| SAIL-M12WM12G-3-X.XU | 1010840030 | C.74 |
| SAIL-M12WM12G-3-X.XU | 1224010000 | J.20 |
| SAIL-M12WM12G-3B-1.5U | 1057870150 | B.44 |
| SAIL-M12WM12G-4B-1.5U | 1057880150 | B.44 |
| SAIL-M12WM12G-5-1.5U | 9456500150 | B.7 |
| SAIL-M12WM12G-5-10U | 9456501000 | B.7 |
| SAIL-M12WM12G-5-3.0U | 9456500300 | B.7 |
| SAIL-M12WM12G-5-5.0U | 9456500500 | B.7 |
| SAIL-M12WM12G-5-X.XU | 9456500000 | B.7 |
| SAIL-M12WM12G-5B-1.5U | 1057890150 | B.44 |
| SAIL-M12WM12W-3-1.5V | 1925380150 | B.25 |
| SAIL-M12WM12W-3-1.5V | 1925380150 | B.7 |
| SAIL-M12WM12W-3-10V | 1925381000 | B.7 |
| SAIL-M12WM12W-3-3.0V | 1925380300 | B.7 |
| SAIL-M12WM12W-3-5.0V | 1925380500 | B.7 |
| SAIL-M12WM12W-3-X.XU | 1815670000 | B.7 |
| SAIL-M12WM12W-3-X.XU | 1279490100 | C.10 |
| SAIL-M12WM12W-3-X.XU | 1010840015 | C.74 |
| SAIL-M12WM12W-3-X.XU | 1224000000 | J.20 |
| SAIL-M12WM12W-3-X.XV | 1925380000 | B.7 |
| SAIL-M12WM12W-3-X.XV | 1291910000 | E.6 |
| SAIL-M12WM12W-3B-1.5U | 1061910150 | B.44 |
| SAIL-M12WM12W-3S1.5U | 1059720150 | B.28 |
| SAIL-M12WM12W-4-1.5U | 1906310150 | B.25 |
| SAIL-M12WM12W-4-1.5U | 1906310150 | B.7 |
| SAIL-M12WM12W-4-1.5V | 1925390150 | B.25 |
| SAIL-M12WM12W-4-1.5V | 1925390150 | B.7 |
| SAIL-M12WM12W-4-10U | 1906311000 | B.7 |
| SAIL-M12WM12W-4-10V | 1925391000 | B.7 |
| SAIL-M12WM12W-4-3.0U | 1906310300 | B.7 |
| SAIL-M12WM12W-4-3.0V | 1925390300 | B.7 |
| SAIL-M12WM12W-4-5.0U | 1906310500 | B.7 |
| SAIL-M12WM12W-4-5.0V | 1925390500 | B.7 |
| SAIL-M12WM12W-4-X.XU | 1906310000 | B.7 |
| SAIL-M12WM12W-4-X.XV | 1925390000 | B.7 |
| SAIL-M12WM12W-4-X.XV | 1291920000 | E.7 |
| SAIL-M12WM12W-4B-1.5U | 1061920150 | B.44 |
| SAIL-M12WM12W-4S1.5U | 1059730150 | B.28 |
| SAIL-M12WM12W-5-1.5U | 9457900150 | B.25 |
| SAIL-M12WM12W-5-1.5U | 9457900150 | B.7 |
| SAIL-M12WM12W-5-1.5V | 1925400150 | B.25 |
| SAIL-M12WM12W-5-1.5V | 1925400150 | B.7 |
| SAIL-M12WM12W-5-10U | 9457901000 | B.7 |
| SAIL-M12WM12W-5-10V | 1925401000 | B.7 |
| SAIL-M12WM12W-5-3.0U | 9457900300 | B.7 |
| SAIL-M12WM12W-5-3.0V | 1925400300 | B.7 |
| SAIL-M12WM12W-5-5.0U | 9457900500 | B.7 |
| SAIL-M12WM12W-5-5.0V | 1925400500 | B.7 |
| SAIL-M12WM12W-5-X.XU | 9457900000 | B.7 |
| SAIL-M12WM12W-5-X.XV | 1925400000 | B.7 |
| SAIL-M12WM12W-5-X.XV | 1291930000 | E.6 |
| SAIL-M12WM12W-5B-1.5U | 1061930150 | B.44 |
| SAIL-M12WM12W-5S1.5U | 1059740150 | B.28 |
| SAIL-M12WM12W-CD-1.5A | 1062150150 | C.63 |
| SAIL-M12WM12W-CD-1.5B | 1062210150 | C.63 |
| SAIL-M12WM12W-PB-1.5D | 1062330150 | C.7 |
| SAIL-M12WM12W-PB-1.5E | 1062400150 | C.7 |
| SAIL-M12WM8W-3-1.5U | 1906330150 | B.29 |
| SAIL-M12WM8W-3-1.5U | 1906330150 | B.5 |
| SAIL-M12WM8W-3-1.5V | 1938190150 | B.29 |
| SAIL-M12WM8W-3-1.5V | 1938190150 | B.5 |
| SAIL-M12WM8W-3-10U | 1906331000 | B.5 |
| SAIL-M12WM8W-3-10V | 1938191000 | B.5 |
| SAIL-M12WM8W-3-3.0U | 1906330300 | B.5 |
| SAIL-M12WM8W-3-3.0V | 1938190300 | B.5 |
| SAIL-M12WM8W-3-5.0U | 1906330500 | B.5 |
| SAIL-M12WM8W-3-5.0V | 1938190500 | B.5 |
| SAIL-M12WM8W-3-X.XU | 1906330000 | B.5 |
| SAIL-M12WM8W-3-X.XV | 1938190000 | B.5 |
| SAIL-M12WM8W-4-1.5U | 1906340150 | B.29 |
| SAIL-M12WM8W-4-1.5U | 1906340150 | B.5 |
| SAIL-M12WM8W-4-1.5V | 1938220150 | B.29 |
| SAIL-M12WM8W-4-1.5V | 1938220150 | B.5 |
| SAIL-M12WM8W-4-10U | 1906341000 | B.5 |
| SAIL-M12WM8W-4-10V | 1938221000 | B.5 |

| Type | Order No. | Page |
|---|---|---|
| SAIL-M12WM8W-4-3.0U | 1906340300 | B.5 |
| SAIL-M12WM8W-4-3.0V | 1938220300 | B.5 |
| SAIL-M12WM8W-4-5.0U | 1906340500 | B.5 |
| SAIL-M12WM8W-4-5.0V | 1938220500 | B.5 |
| SAIL-M12WM8W-4-X.XU | 1906340000 | B.5 |
| SAIL-M12WM8W-4-X.XV | 1938220000 | B.5 |
| SAIL-M16BW-12-1.5U | 1259010150 | B.40 |
| SAIL-M23-KSW-7/12 | 1169930000 | J.12 |
| SAIL-M5BG-3P-1.5U | 1873290150 | B.23 |
| SAIL-M5BG-4P-1.5U | 1873250150 | B.23 |
| SAIL-M5BW-3P-1.5U | 1873260150 | B.23 |
| SAIL-M5BW-4P-1.5U | 1873270150 | B.23 |
| SAIL-M5G-3P-1.5U | 1854060150 | B.23 |
| SAIL-M5G-4P-1.5U | 1871700150 | B.23 |
| SAIL-M5W-3P-1.5U | 1873280150 | B.23 |
| SAIL-M5W-4P-1.5U | 1873240150 | B.23 |
| SAIL-M8BG-3-1.5UGE | 1093190150 | B.19 |
| SAIL-M8BG-3-1.5U | 9457450150 | B.19 |
| SAIL-M8BG-3-1.5U | 9457450150 | B.4 |
| SAIL-M8BG-3-1.5V | 1927240150 | B.19 |
| SAIL-M8BG-3-1.5V | 1927240150 | B.4 |
| SAIL-M8BG-3-10U | 9457451000 | B.4 |
| SAIL-M8BG-3-10V | 1927241000 | B.4 |
| SAIL-M8BG-3-3.0U | 9457450300 | B.4 |
| SAIL-M8BG-3-3.0V | 1927240300 | B.4 |
| SAIL-M8BG-3-5.0U | 9457450500 | B.4 |
| SAIL-M8BG-3-5.0V | 1927240500 | B.4 |
| SAIL-M8BG-3S1.5U | 1906600150 | B.22 |
| SAIL-M8BG-4-1.5UGE | 1093200150 | B.19 |
| SAIL-M8BG-4-1.5U | 9457850150 | B.19 |
| SAIL-M8BG-4-1.5U | 9457850150 | B.5 |
| SAIL-M8BG-4-1.5V | 1927260150 | B.19 |
| SAIL-M8BG-4-1.5V | 1927260150 | B.5 |
| SAIL-M8BG-4-10U | 9457851000 | B.5 |
| SAIL-M8BG-4-10V | 1927261000 | B.5 |
| SAIL-M8BG-4-3.0U | 9457850300 | B.5 |
| SAIL-M8BG-4-3.0V | 1927260300 | B.5 |
| SAIL-M8BG-4-5.0U | 9457850500 | B.5 |
| SAIL-M8BG-4-5.0V | 1927260500 | B.5 |
| SAIL-M8BG-4S-1.5U-SB | 1981910150 | C.65 |
| SAIL-M8BG-4S-10Ω-SB | 1981911000 | C.65 |
| SAIL-M8BG-4S-3.0Ω-SB | 1981910300 | C.65 |
| SAIL-M8BG-4S-5.0Ω-SB | 1981910500 | C.65 |
| SAIL-M8BG-4S1.5U | 1906610150 | B.22 |
| SAIL-M8BGR-3-1.5U | 1827020150 | B.20 |
| SAIL-M8BGR-3-1.5V | 1948710150 | B.20 |
| SAIL-M8BGR-4-1.5U | 1948530150 | B.20 |
| SAIL-M8BGR-4-1.5V | 1948730150 | B.20 |
| SAIL-M8BGS-3-X.XU | 9457450000 | B.4 |
| SAIL-M8BGS-3-X.XV | 1927240000 | B.4 |
| SAIL-M8BGS-4-X.XV | 1927260000 | B.5 |
| SAIL-M8BW-3-1.5UGE | 1093220150 | B.19 |
| SAIL-M8BW-3-1.5U | 9457380150 | B.19 |
| SAIL-M8BW-3-1.5U | 9457380150 | B.5 |
| SAIL-M8BW-3-1.5V | 1927320150 | B.19 |
| SAIL-M8BW-3-1.5V | 1927320150 | B.5 |
| SAIL-M8BW-3-10U | 9457381000 | B.5 |
| SAIL-M8BW-3-10V | 1927321000 | B.5 |
| SAIL-M8BW-3-3.0U | 9457380300 | B.5 |
| SAIL-M8BW-3-3.0V | 1927320300 | B.5 |
| SAIL-M8BW-3-5.0U | 9457380500 | B.5 |
| SAIL-M8BW-3-5.0V | 1927320500 | B.5 |
| SAIL-M8BW-3L1.5UGE | 1093210150 | B.21 |
| SAIL-M8BW-3L1.5U | 9457460150 | B.21 |
| SAIL-M8BW-3L1.5U | 9457460150 | B.5 |
| SAIL-M8BW-3L1.5V | 1927350150 | B.21 |
| SAIL-M8BW-3L1.5V | 1927350150 | B.5 |
| SAIL-M8BW-3L10U | 9457461000 | B.5 |
| SAIL-M8BW-3L10V | 1927351000 | B.5 |
| SAIL-M8BW-3L3.0U | 9457460300 | B.5 |
| SAIL-M8BW-3L3.0V | 1927350300 | B.5 |
| SAIL-M8BW-3L5.0U | 9457460500 | B.5 |
| SAIL-M8BW-3L5.0V | 1927350500 | B.5 |
| SAIL-M8BW-3LX.XU | 9457460000 | B.5 |
| SAIL-M8BW-3S1.5U | 1906620150 | B.22 |
| SAIL-M8BW-4-1.5UGE | 1093240150 | B.19 |
| SAIL-M8BW-4-1.5U | 9456150150 | B.19 |
| SAIL-M8BW-4-1.5U | 9456150150 | B.5 |
| SAIL-M8BW-4-1.5V | 1927340150 | B.19 |
| SAIL-M8BW-4-1.5V | 1927340150 | B.5 |
| SAIL-M8BW-4-10U | 9456151000 | B.5 |
| SAIL-M8BW-4-10V | 1927341000 | B.5 |
| SAIL-M8BW-4-3.0U | 9456150300 | B.5 |
| SAIL-M8BW-4-3.0V | 1927340300 | B.5 |
| SAIL-M8BW-4-5.0U | 9456150500 | B.5 |
| SAIL-M8BW-4-5.0V | 1927340500 | B.5 |
| SAIL-M8BW-4-X.XU | 9456150000 | B.5 |
| SAIL-M8BW-4L1.5UGE | 1093230150 | B.21 |
| SAIL-M8BW-4L1.5U | 1906400150 | B.21 |
| SAIL-M8BW-4L1.5V | 1927360150 | B.21 |
| SAIL-M8BW-4S1.5U | 1906630150 | B.22 |
| SAIL-M8BWR-3-1.5U | 1827010150 | B.20 |
| SAIL-M8BWR-3-1.5V | 1948720150 | B.20 |
| SAIL-M8BWR-4-1.5U | 1948540150 | B.20 |
| SAIL-M8BWR-4-1.5V | 1948740150 | B.20 |
| SAIL-M8BWS-3-X.XU | 9457380000 | B.5 |
| SAIL-M8BWS-3-X.XV | 1927320000 | B.5 |
| SAIL-M8BWS-3LX.XV | 1927350000 | B.5 |
| SAIL-M8BWS-4-X.XV | 1927340000 | B.5 |

| Type | Order No. | Page |
|---|---|---|
| SAIL-M8G-3-1.5U | 1824590150 | B.19 |
| SAIL-M8G-3-1.5V | 1927230150 | B.19 |
| SAIL-M8G-3-1.5V | 1927230150 | B.4 |
| SAIL-M8G-3-10U | 1824591000 | B.4 |
| SAIL-M8G-3-10V | 1927231000 | B.4 |
| SAIL-M8G-3-3.0U | 1824590300 | B.4 |
| SAIL-M8G-3-3.0V | 1927230300 | B.4 |
| SAIL-M8G-3-5.0U | 1824590500 | B.4 |
| SAIL-M8G-3-5.0V | 1927230500 | B.4 |
| SAIL-M8G-3-X.XU | 1824590000 | B.4 |
| SAIL-M8G-3-X.XV | 1927230000 | B.4 |
| SAIL-M8G-3S1.5U | 1906560150 | B.22 |
| SAIL-M8G-4-1.5U | 1906270150 | B.19 |
| SAIL-M8G-4-1.5U | 1906270150 | B.4 |
| SAIL-M8G-4-1.5V | 1927250150 | B.19 |
| SAIL-M8G-4-1.5V | 1927250150 | B.4 |
| SAIL-M8G-4-10U | 1906271000 | B.4 |
| SAIL-M8G-4-10V | 1927251000 | B.4 |
| SAIL-M8G-4-3.0U | 1906270300 | B.4 |
| SAIL-M8G-4-3.0V | 1927250300 | B.4 |
| SAIL-M8G-4-5.0U | 1906270500 | B.4 |
| SAIL-M8G-4-5.0V | 1927250500 | B.4 |
| SAIL-M8G-4-X.XU | 1906270000 | B.4 |
| SAIL-M8G-4-X.XV | 1927250000 | B.4 |
| SAIL-M8G-4S0.1UIE | 1160820010 | C.68 |
| SAIL-M8G-4S0.3UIE | 1160820030 | C.68 |
| SAIL-M8G-4S0.5UIE | 1160820050 | C.68 |
| SAIL-M8G-4S1.0UIE | 1160820100 | C.68 |
| SAIL-M8G-4S1.5U | 1906570150 | B.22 |
| SAIL-M8G-4S10UIE | 1160821000 | C.68 |
| SAIL-M8G-4S2.0UIE | 1160820200 | C.68 |
| SAIL-M8G-4S3.0UIE | 1160820300 | C.68 |
| SAIL-M8G-4S4.0UIE | 1160820400 | C.68 |
| SAIL-M8G-4S5.0UIE | 1160820500 | C.68 |
| SAIL-M8G-4S7.5UIE | 1160820750 | C.68 |
| SAIL-M8GM12G-3-1.5U | 1937950150 | B.6 |
| SAIL-M8GM12G-3-1.5V | 1938230150 | B.6 |
| SAIL-M8GM12G-3-10U | 1937951000 | B.6 |
| SAIL-M8GM12G-3-10V | 1938231000 | B.6 |
| SAIL-M8GM12G-3-3.0U | 1937950300 | B.6 |
| SAIL-M8GM12G-3-3.0V | 1938230300 | B.6 |
| SAIL-M8GM12G-3-5.0U | 1937950500 | B.6 |
| SAIL-M8GM12G-3-5.0V | 1938230500 | B.6 |
| SAIL-M8GM12G-3-X.XU | 1937950000 | B.6 |
| SAIL-M8GM12G-3-X.XV | 1938230000 | B.6 |
| SAIL-M8GM12G-4-1.5U | 1937980150 | B.6 |
| SAIL-M8GM12G-4-1.5V | 1938260150 | B.6 |
| SAIL-M8GM12G-4-10U | 1937981000 | B.6 |
| SAIL-M8GM12G-4-10V | 1938261000 | B.6 |
| SAIL-M8GM12G-4-3.0U | 1937980300 | B.6 |
| SAIL-M8GM12G-4-3.0V | 1938260300 | B.6 |
| SAIL-M8GM12G-4-5.0U | 1937980500 | B.6 |
| SAIL-M8GM12G-4-5.0V | 1938260500 | B.6 |
| SAIL-M8GM12G-4-X.XU | 1937980000 | B.6 |
| SAIL-M8GM12G-4-X.XV | 1938260000 | B.6 |
| SAIL-M8GM12W-3-1.5U | 1937960150 | B.7 |
| SAIL-M8GM12W-3-1.5V | 1938240150 | B.7 |
| SAIL-M8GM12W-3-10U | 1937961000 | B.7 |
| SAIL-M8GM12W-3-10V | 1938241000 | B.7 |
| SAIL-M8GM12W-3-3.0U | 1937960300 | B.7 |
| SAIL-M8GM12W-3-3.0V | 1938240300 | B.7 |
| SAIL-M8GM12W-3-5.0U | 1937960500 | B.7 |
| SAIL-M8GM12W-3-5.0V | 1938240500 | B.7 |
| SAIL-M8GM12W-3-X.XU | 1937960000 | B.7 |
| SAIL-M8GM12W-3-X.XV | 1938240000 | B.7 |
| SAIL-M8GM12W-4-1.5U | 1937990150 | B.7 |
| SAIL-M8GM12W-4-1.5V | 1938270150 | B.7 |
| SAIL-M8GM12W-4-10U | 1937991000 | B.7 |
| SAIL-M8GM12W-4-10V | 1938271000 | B.7 |
| SAIL-M8GM12W-4-3.0U | 1937990300 | B.7 |
| SAIL-M8GM12W-4-3.0V | 1938270300 | B.7 |
| SAIL-M8GM12W-4-5.0U | 1937990500 | B.7 |
| SAIL-M8GM12W-4-5.0V | 1938270500 | B.7 |
| SAIL-M8GM12W-4-X.XU | 1937990000 | B.7 |
| SAIL-M8GM12W-4-X.XV | 1938270000 | B.7 |
| SAIL-M8GM8G-3-1.5UGE | 1104470150 | B.32 |
| SAIL-M8GM8G-3-1.5U | 1824570150 | B.32 |
| SAIL-M8GM8G-3-1.5V | 1927150150 | B.32 |
| SAIL-M8GM8G-3-1.5V | 1927150150 | B.4 |
| SAIL-M8GM8G-3-10U | 1824571000 | B.4 |
| SAIL-M8GM8G-3-10V | 1927151000 | B.4 |
| SAIL-M8GM8G-3-3.0U | 1824570300 | B.4 |
| SAIL-M8GM8G-3-3.0V | 1927150300 | B.4 |
| SAIL-M8GM8G-3-5.0U | 1824570500 | B.4 |
| SAIL-M8GM8G-3-5.0V | 1927150500 | B.4 |
| SAIL-M8GM8G-3-X.XU | 1824570000 | B.4 |
| SAIL-M8GM8G-3-X.XV | 1927150000 | B.4 |
| SAIL-M8GM8G-4-1.5U | 1880470150 | B.32 |
| SAIL-M8GM8G-4-1.5V | 1927160150 | B.32 |
| SAIL-M8GM8G-4-1.5V | 1927160150 | B.5 |
| SAIL-M8GM8G-4-10U | 1880471000 | B.5 |
| SAIL-M8GM8G-4-10V | 1927161000 | B.5 |
| SAIL-M8GM8G-4-3.0U | 1880470300 | B.5 |
| SAIL-M8GM8G-4-3.0V | 1927160300 | B.5 |
| SAIL-M8GM8G-4-5.0U | 1880470500 | B.5 |
| SAIL-M8GM8G-4-5.0V | 1927160500 | B.5 |
| SAIL-M8GM8G-4-X.XU | 1880470000 | B.5 |
| SAIL-M8GM8G-4-X.XV | 1927160000 | B.5 |
| SAIL-M8GM8G-4S-0.2-CAN | 1004320150 | B.27 |

| Type | Order No. | Page |
|---|---|---|
| SAIL-M8GM8G-4S-0.2-CAN | 1216820020 | C.64 |
| SAIL-M8GM8G-4S-0.25-CAN | 1004330150 | B.16 |
| SAIL-M8GM8G-4S-0.25-CAN | 1216820025 | C.64 |
| SAIL-M8GM8G-4S-0.3-CAN | 1005270150 | B.37 |
| SAIL-M8GM8G-4S-0.3-CAN | 1216820030 | C.64 |
| SAIL-M8GM8G-4S-0.3Ω-SB | 1981900030 | C.65 |
| SAIL-M8GM8G-4S-0.5-CAN | 1005460150 | B.37 |
| SAIL-M8GM8G-4S-0.5-CAN | 1058530150 | C.6 |
| SAIL-M8GM8G-4S-0.5-CAN | 1216820050 | C.64 |
| SAIL-M8GM8G-4S-0.8-CAN | 1058540150 | C.6 |
| SAIL-M8GM8G-4S-0.8-CAN | 1216820080 | C.64 |
| SAIL-M8GM8G-4S-0.8-CAN | 1006920000 | F.39 |
| SAIL-M8GM8G-4S-1.0-CAN | 1216820100 | C.64 |
| SAIL-M8GM8G-4S-1.0-CAN | 1058570150 | C.7 |
| SAIL-M8GM8G-4S-1.0-CAN | 1006930000 | F.38 |
| SAIL-M8GM8G-4S-1.0Ω-SB | 1981900100 | C.65 |
| SAIL-M8GM8G-4S-1.5-CAN | 1216820150 | C.64 |
| SAIL-M8GM8G-4S-1.5-CAN | 1058630000 | C.66 |
| SAIL-M8GM8G-4S-1.5-CAN | 1006940000 | F.38 |
| SAIL-M8GM8G-4S-1.5U-SB | 1981900150 | C.65 |
| SAIL-M8GM8G-4S-10-CAN | 1279480300 | C.10 |
| SAIL-M8GM8G-4S-10-CAN | 1279490050 | C.10 |
| SAIL-M8GM8G-4S-10-CAN | 1279490300 | C.10 |
| SAIL-M8GM8G-4S-10-CAN | 1216821000 | C.64 |
| SAIL-M8GM8G-4S-10-CAN | 1059340015 | C.73 |
| SAIL-M8GM8G-4S-10-CAN | 1059340030 | C.73 |
| SAIL-M8GM8G-4S-10-CAN | 1010070000 | D.21 |
| SAIL-M8GM8G-4S-10-CAN | 1010080000 | D.21 |
| SAIL-M8GM8G-4S-10-CAN | 1010090000 | D.21 |
| SAIL-M8GM8G-4S-10-CAN | 1222270050 | D.38 |
| SAIL-M8GM8G-4S-10-CAN | 1223650050 | D.38 |
| SAIL-M8GM8G-4S-10Ω-SB | 1981901000 | C.65 |
| SAIL-M8GM8G-4S-15Ω-SB | 1981901500 | C.65 |
| SAIL-M8GM8G-4S-20Ω-SB | 1981902000 | C.65 |
| SAIL-M8GM8G-4S-3.0-CAN | 1216820300 | C.64 |
| SAIL-M8GM8G-4S-3.0-CAN | 1059330015 | C.69 |
| SAIL-M8GM8G-4S-3.0-CAN | 1006980000 | F.36 |
| SAIL-M8GM8G-4S-3.0Ω-SB | 1981900300 | C.65 |
| SAIL-M8GM8G-4S-3.5-CAN | 1007000150 | B.16 |
| SAIL-M8GM8G-4S-3.5-CAN | 1216820350 | C.64 |
| SAIL-M8GM8G-4S-3.5-CAN | 1059330030 | C.69 |
| SAIL-M8GM8G-4S-5.0-CAN | 1216820500 | C.64 |
| SAIL-M8GM8G-4S-5.0-CAN | 1059330050 | C.69 |
| SAIL-M8GM8G-4S-5.0-CAN | 1009370000 | D.29 |
| SAIL-M8GM8G-4S-5.0Ω-SB | 1981900500 | C.65 |
| SAIL-M8GM8G-4S-7.0-CAN | 1216820700 | C.64 |
| SAIL-M8GM8G-4S-7.0-CAN | 1059330100 | C.69 |
| SAIL-M8GM8G-4S-7.0-CAN | 1010060000 | D.21 |
| SAIL-M8GM8GR-3-1.5U | 1948470150 | B.33 |
| SAIL-M8GM8GR-3-1.5V | 1948650150 | B.33 |
| SAIL-M8GM8GR-4-1.5U | 1948500150 | B.33 |
| SAIL-M8GM8GR-4-1.5V | 1948680150 | B.33 |
| SAIL-M8GM8SG-4S0.1UIE | 1160930010 | C.68 |
| SAIL-M8GM8SG-4S0.3UIE | 1160930030 | C.68 |
| SAIL-M8GM8SG-4S0.5UIE | 1160930050 | C.68 |
| SAIL-M8GM8SG-4S1.0UIE | 1160930100 | C.68 |
| SAIL-M8GM8SG-4S15UIE | 1160931500 | C.68 |
| SAIL-M8GM8SG-4S2.0UIE | 1160930200 | C.68 |
| SAIL-M8GM8SG-4S20UIE | 1160932000 | C.68 |
| SAIL-M8GM8SG-4S3.0UIE | 1160930300 | C.68 |
| SAIL-M8GM8SG-4S30UIE | 1160933000 | C.68 |
| SAIL-M8GM8SG-4S4.0UIE | 1160930400 | C.68 |
| SAIL-M8GM8SG-4S40UIE | 1160934000 | C.68 |
| SAIL-M8GM8SG-4S5.0UIE | 1160930500 | C.68 |
| SAIL-M8GM8SG-4S50UIE | 1160935000 | C.68 |
| SAIL-M8GM8SG-4S7.5UIE | 1160930750 | C.68 |
| SAIL-M8GM8W-3-1.5U | 1824580150 | B.32 |
| SAIL-M8GM8W-3-1.5V | 1927170150 | B.32 |
| SAIL-M8GM8W-3-1.5V | 1927170150 | B.5 |
| SAIL-M8GM8W-3-10U | 1824581000 | B.5 |
| SAIL-M8GM8W-3-10V | 1927171000 | B.5 |
| SAIL-M8GM8W-3-3.0U | 1824580300 | B.5 |
| SAIL-M8GM8W-3-3.0V | 1927170300 | B.5 |
| SAIL-M8GM8W-3-5.0U | 1824580500 | B.5 |
| SAIL-M8GM8W-3-5.0V | 1927170500 | B.5 |
| SAIL-M8GM8W-3-X.XU | 1824580000 | B.5 |
| SAIL-M8GM8W-3-X.XV | 1927170000 | B.5 |
| SAIL-M8GM8W-3L1.5U | 1877250150 | B.34 |
| SAIL-M8GM8W-3L1.5V | 1927190150 | B.34 |
| SAIL-M8GM8W-3L1.5V | 1927190150 | B.5 |
| SAIL-M8GM8W-3L10U | 1877251000 | B.5 |
| SAIL-M8GM8W-3L10V | 1927191000 | B.5 |
| SAIL-M8GM8W-3L3.0U | 1877250300 | B.5 |
| SAIL-M8GM8W-3L3.0V | 1927190300 | B.5 |
| SAIL-M8GM8W-3L5.0U | 1877250500 | B.5 |
| SAIL-M8GM8W-3L5.0V | 1927190500 | B.5 |
| SAIL-M8GM8W-3LX.XU | 1877250000 | B.5 |
| SAIL-M8GM8W-3LX.XV | 1927190000 | B.5 |
| SAIL-M8GM8W-4-1.5U | 1857660150 | B.32 |
| SAIL-M8GM8W-4-1.5V | 1927180150 | B.32 |
| SAIL-M8GM8W-4-1.5V | 1927180150 | B.5 |
| SAIL-M8GM8W-4-10U | 1857661000 | B.5 |
| SAIL-M8GM8W-4-10V | 1927181000 | B.5 |
| SAIL-M8GM8W-4-3.0U | 1857660300 | B.5 |
| SAIL-M8GM8W-4-3.0V | 1927180300 | B.5 |
| SAIL-M8GM8W-4-5.0U | 1857660500 | B.5 |
| SAIL-M8GM8W-4-5.0V | 1927180500 | B.5 |
| SAIL-M8GM8W-4-X.XU | 1857660000 | B.5 |
| SAIL-M8GM8W-4-X.XV | 1927180000 | B.5 |

| Type | Order No. | Page |
|---|---|---|
| SAIL-M8GM8W-4L1.5U | 1906450150 | B.34 |
| SAIL-M8GM8W-4L1.5V | 1927200150 | B.34 |
| SAIL-M8GM8WR-3-1.5U | 1948480150 | B.33 |
| SAIL-M8GM8WR-3-1.5V | 1948660150 | B.33 |
| SAIL-M8GM8WR-4-1.5U | 1948510150 | B.33 |
| SAIL-M8GM8WR-4-1.5V | 1948690150 | B.33 |
| SAIL-M8GRJ45-4S10UIE | 1201211000 | C.68 |
| SAIL-M8GRJ45-4S2.0UIE | 1201210200 | C.68 |
| SAIL-M8GRJ45-4S5.0UIE | 1201210500 | C.68 |
| SAIL-M8GRJ45-4S7.5UIE | 1201210750 | C.68 |
| SAIL-M8W-3-1.5U | 1857550150 | B.19 |
| SAIL-M8W-3-1.5V | 1927310150 | B.19 |
| SAIL-M8W-3-1.5V | 1927310150 | B.4 |
| SAIL-M8W-3-10U | 1857551000 | B.4 |
| SAIL-M8W-3-10V | 1927311000 | B.4 |
| SAIL-M8W-3-3.0U | 1857550300 | B.4 |
| SAIL-M8W-3-3.0V | 1927310300 | B.4 |
| SAIL-M8W-3-5.0U | 1857550500 | B.4 |
| SAIL-M8W-3-5.0V | 1927310500 | B.4 |
| SAIL-M8W-3-X.XU | 1857550000 | B.4 |
| SAIL-M8W-3-X.XV | 1927310000 | B.4 |
| SAIL-M8W-3S1.5U | 1906580150 | B.22 |
| SAIL-M8W-4-1.5U | 1857560150 | B.19 |
| SAIL-M8W-4-1.5V | 1927330150 | B.19 |
| SAIL-M8W-4-1.5V | 1927330150 | B.4 |
| SAIL-M8W-4-10U | 1857561000 | B.4 |
| SAIL-M8W-4-10V | 1927331000 | B.4 |
| SAIL-M8W-4-3.0U | 1857560300 | B.4 |
| SAIL-M8W-4-3.0V | 1927330300 | B.4 |
| SAIL-M8W-4-5.0U | 1857560500 | B.4 |
| SAIL-M8W-4-5.0V | 1927330500 | B.4 |
| SAIL-M8W-4-X.XU | 1857560000 | B.4 |
| SAIL-M8W-4-X.XV | 1927330000 | B.4 |
| SAIL-M8W-4S1.5U | 1906590150 | B.22 |
| SAIL-M8WM12W-3-1.5U | 1937970150 | B.7 |
| SAIL-M8WM12W-3-1.5V | 1938250150 | B.7 |
| SAIL-M8WM12W-3-10U | 1937971000 | B.7 |
| SAIL-M8WM12W-3-10V | 1938251000 | B.7 |
| SAIL-M8WM12W-3-3.0U | 1937970300 | B.7 |
| SAIL-M8WM12W-3-3.0V | 1938250300 | B.7 |
| SAIL-M8WM12W-3-5.0U | 1937970500 | B.7 |
| SAIL-M8WM12W-3-5.0V | 1938250500 | B.7 |
| SAIL-M8WM12W-3-X.XU | 1937970000 | B.7 |
| SAIL-M8WM12W-3-X.XV | 1938250000 | B.7 |
| SAIL-M8WM12W-4-1.5U | 1938000150 | B.7 |
| SAIL-M8WM12W-4-1.5V | 1938280150 | B.7 |
| SAIL-M8WM12W-4-10U | 1938001000 | B.7 |
| SAIL-M8WM12W-4-10V | 1938281000 | B.7 |
| SAIL-M8WM12W-4-3.0U | 1938000300 | B.7 |
| SAIL-M8WM12W-4-3.0V | 1938280300 | B.7 |
| SAIL-M8WM12W-4-5.0U | 1938000500 | B.7 |
| SAIL-M8WM12W-4-5.0V | 1938280500 | B.7 |
| SAIL-M8WM12W-4-X.XU | 1938000000 | B.7 |
| SAIL-M8WM12W-4-X.XV | 1938280000 | B.7 |
| SAIL-M8WM12W-4-X.XV | 1938668000 | F.4 |
| SAIL-M8WM8W-3-1.5U | 1857670150 | B.32 |
| SAIL-M8WM8W-3-1.5V | 1927210150 | B.32 |
| SAIL-M8WM8W-3-1.5V | 1927210150 | B.5 |
| SAIL-M8WM8W-3-10U | 1857671000 | B.5 |
| SAIL-M8WM8W-3-10V | 1927211000 | B.5 |
| SAIL-M8WM8W-3-3.0U | 1857670300 | B.5 |
| SAIL-M8WM8W-3-3.0V | 1927210300 | B.5 |
| SAIL-M8WM8W-3-5.0U | 1857670500 | B.5 |
| SAIL-M8WM8W-3-5.0V | 1927210500 | B.5 |
| SAIL-M8WM8W-3-X.XU | 1857670000 | B.5 |
| SAIL-M8WM8W-3-X.XV | 1927210000 | B.5 |
| SAIL-M8WM8W-4-1.5U | 1857680150 | B.32 |
| SAIL-M8WM8W-4-1.5V | 1927220150 | B.32 |
| SAIL-M8WM8W-4-1.5V | 1927220150 | B.5 |
| SAIL-M8WM8W-4-10U | 1857681000 | B.5 |
| SAIL-M8WM8W-4-10V | 1927221000 | B.5 |
| SAIL-M8WM8W-4-3.0U | 1857680300 | B.5 |
| SAIL-M8WM8W-4-3.0V | 1927220300 | B.5 |
| SAIL-M8WM8W-4-5.0U | 1857680500 | B.5 |
| SAIL-M8WM8W-4-5.0V | 1927220500 | B.5 |
| SAIL-M8WM8W-4-X.XU | 1857680000 | B.5 |
| SAIL-M8WM8W-4-X.XV | 1927220000 | B.5 |
| SAIL-M8WM8WR-3-1.5U | 1948490150 | B.33 |
| SAIL-M8WM8WR-3-1.5V | 1948670150 | B.33 |
| SAIL-M8WM8WR-4-1.5U | 1948520150 | B.33 |
| SAIL-M8WM8WR-4-1.5V | 1948700150 | B.33 |
| SAIL-VSA-1.5U | 9457710150 | B.47 |
| SAIL-VSA-1.5U(0.5) | 1845120150 | B.51 |
| SAIL-VSA-M12G-1.5U | 9457040000 | B.47 |
| SAIL-VSA-M12W-1.5U | 1857690150 | B.47 |
| SAIL-VSA-M8G-3-1.5U | 1099760150 | B.53 |
| SAIL-VSB-1.5U | 9457930150 | B.48 |
| SAIL-VSB-1.5U(0.5) | 1845140150 | B.52 |
| SAIL-VSB-M12G-1.5U | 9457680150 | B.48 |
| SAIL-VSB-M12W-1.5U | 1857700150 | B.48 |
| SAIL-VSB-M8G-3-0.15U | 1271590015 | B.54 |
| SAIL-VSBD-1.5U | 9456070150 | B.48 |
| SAIL-VSBD-1.5U(0.5) | 1845160150 | B.52 |
| SAIL-VSBD-M12G-1.5U | 9457780150 | B.48 |
| SAIL-VSBD-M12W-1.5U | 1857710150 | B.48 |
| SAIL-VSBD-M8G-3-1.5U | 1099770150 | B.54 |
| SAIL-VSBD180-M8G-3-1.5U | 1276450150 | B.54 |
| SAIL-VSC-1.5U | 9457920150 | B.49 |
| SAIL-VSC-M12G-1.5U | 9457400150 | B.49 |

| Type | Order No. | Page |
|---|---|---|
| SAIL-VSC-M12W-1.5U | 1857720150 | B.49 |
| SAIL-VSC-M8G-0.15U | 1309680015 | B.55 |
| SAIL-VSCD-1.5U | 9456240150 | B.49 |
| SAIL-VSCD-M12G-1.5U | 9456170150 | B.49 |
| SAIL-VSCD-M12W-1.5U | 1857730150 | B.49 |
| SAIL-VSCD-M8G-3-1.5U | 1916700150 | B.55 |
| SAIL-ZW-3-1.5U | 1964310150 | B.18 |
| SAIL-ZW-M12BG-2/4-1.5U | 1812550150 | B.38 |
| SAIL-ZW-M12BW-2/4-1.5U | 1964280150 | B.38 |
| SAIL-ZW-M12BW-2/4L1.5U | 1964290150 | B.38 |
| SAIL-ZW-M12BW-3L1.5U | 1912110150 | B.37 |
| SAIL-ZW-M8BG-3-1.5UGE | 1093250150 | B.39 |
| SAIL-ZW-M8BG-3-1.5U | 9457490150 | B.39 |
| SAIL-ZW-M8BW-3-1.5UGE | 1093260150 | B.39 |
| SAIL-ZW-M8BW-3-1.5U | 1964300150 | B.39 |
| SAIL-ZW-M8BW-3L1.5U | 9457410150 | B.39 |
| SAIP-M12BG-3-1.5U | 1108730150 | B.12 |
| SAIP-M12BG-4-1.5U | 1108740150 | B.12 |
| SAIP-M12BG-5-1.5U | 1108750150 | B.12 |
| SAIP-M12BW-3-1.5U | 1108770150 | B.12 |
| SAIP-M12BW-4-1.5U | 1108780150 | B.12 |
| SAIP-M12BW-5-1.5U | 1108790150 | B.12 |
| SAIP-M12G-3-1.5U | 1108800150 | B.12 |
| SAIP-M12G-4-1.5U | 1108810150 | B.12 |
| SAIP-M12G-5-1.5U | 1108820150 | B.12 |
| SAIP-M12W-3-1.5U | 1108670150 | B.12 |
| SAIP-M12W-4-1.5U | 1108680150 | B.12 |
| SAIP-M12W-5-1.5U | 1108690150 | B.12 |
| SAIS 5/9-VA | 1920700000 | C.31 |
| SAIS 5/9-VA | 1920700000 | D.12 |
| SAIS 5/9-VA | 1920700000 | I.31 |
| SAIS 5/9-VA D-COD | 1920700001 | C.78 |
| SAIS 5/9-VA-B-COD | 1920720000 | C.11 |
| SAIS 5/9-VA-B-COD | 1920720000 | D.12 |
| SAIS 5/9-VA-B-COD | 1920720000 | I.31 |
| SAIS-12/9-(TL) | 1924950000 | D.11 |
| SAIS-12/9-(TL) | 1924950000 | D.5 |
| SAIS-3-IDC (0,75) M12 | 1852720000 | D.25 |
| SAIS-3-IDC M8 small | 1784040001 | D.26 |
| SAIS-3-IDC-M12B-COD | 1864730000 | C.13 |
| SAIS-3-IDC-M12B-COD | 1864730000 | D.16 |
| SAIS-3/7 | 1021470000 | D.5 |
| SAIS-3/9 | 1021480000 | D.5 |
| SAIS-4-IDC (0,75) M12 | 1852740000 | D.25 |
| SAIS-4-IDC M12 small | 1781550001 | D.24 |
| SAIS-4-IDC M8 small | 1784060001 | D.26 |
| SAIS-4/11-1.5 | 1353700000 | D.9 |
| SAIS-4/7 | 9457550000 | D.5 |
| SAIS-4/7 | 9457550000 | D.7 |
| SAIS-4/7-(KV) | 1921060000 | D.10 |
| SAIS-4/9 | 1807340000 | D.7 |
| SAIS-4/9-7/8" | 1808840000 | E.6 |
| SAIS-5/11-1.5 | 1353740000 | D.9 |
| SAIS-5/11-7/8" | 1291970000 | E.7 |
| SAIS-5/7 | 9456940000 | D.5 |
| SAIS-5/7 | 9456940000 | D.8 |
| SAIS-5/7-(KV) | 1921050000 | D.10 |
| SAIS-5/7-ZF | 1906390000 | D.19 |
| SAIS-5/7-ZF | 1906390000 | D.5 |
| SAIS-5/9 | 1807350000 | D.8 |
| SAIS-5/9-7/8" | 1301220000 | E.6 |
| SAIS-8/9 | 1836970000 | D.8 |
| SAIS-M-5/8S M12 5P A-COD | 1784740000 | C.32 |
| SAIS-M-5/8S M12 5P A-COD | 1784740000 | D.15 |
| SAIS-M16-2/9 | 1321700000 | D.27 |
| SAIS-M16-4/9 | 1117970000 | D.27 |
| SAIS-M16-5/9 | 1117990000 | D.27 |
| SAIS-M16-6/9 | 1304390000 | D.27 |
| SAIS-M16-7/9 | 1118010000 | D.27 |
| SAIS-M16-8/9 | 1304430000 | D.27 |
| SAIS-M23-12P-AN-1,0M | 1906290100 | J.30 |
| SAIS-M23-12P-ST-1,0M | 1906280100 | J.30 |
| SAIS-M23-19P-ST-1,0M | 1818160100 | J.30 |
| SAIS-M8-3P | 1803860000 | D.20 |
| SAIS-M8-4P | 1803850000 | D.20 |
| SAIS-ZW-5 | 9457540000 | D.30 |
| SAIS-ZWW | 1837560000 | D.30 |
| SAISM 5/8S M12 5P B-COD | 1784790000 | C.12 |
| SAISM 5/8S M12 5P B-COD | 1784790000 | D.16 |
| SAISM-4/8S-M12 4P D-ZF | 1892120001 | D.18 |
| SAISM-4/8S-M12-4P D-COD | 1892120000 | C.77 |
| SAISM-4/8S-M12-4P D-COD | 1892120000 | D.16 |
| SAISM-5/6S M12 5P A-COD | 1191030000 | D.5 |
| SAISM-8/11S-M12 | 1118910000 | D.14 |
| SAISM-8/9S-M12 | 1258940000 | D.14 |
| SAISM-M8-3P(TL) | 1921030000 | D.21 |
| SAISM-M8-3P(TL) | 1921030000 | D.6 |
| SAISM-M8-4P(TL) | 1921040000 | D.21 |
| SAISM-M8-4P(TL) | 1921040000 | D.6 |
| SAISW- 5/9 | 1807370000 | D.8 |
| SAISW-3/7 | 1021280000 | D.5 |
| SAISW-3/9 | 1021290000 | D.7 |
| SAISW-4-IDC M12 | 1812870000 | D.24 |
| SAISW-4/11-7/8" | 1292040000 | E.7 |
| SAISW-4/7 | 9457290000 | D.5 |
| SAISW-4/7 | 9457290000 | D.7 |
| SAISW-4/7-(KV) | 1962620000 | D.10 |
| SAISW-4/8S-M12 4P D-ZF | 1803930001 | D.18 |
| SAISW-4/8S-M12-4P D-COD | 1160550000 | C.77 |

| Type | Order No. | Page |
|---|---|---|
| SAISW-4/9 | 1807360000 | D.7 |
| SAISW-4/9-7/8" | 1808830000 | E.6 |
| SAISW-5/11-7/8" | 1291990000 | E.7 |
| SAISW-5/7 | 9456950000 | D.5 |
| SAISW-5/7 | 9456950000 | D.8 |
| SAISW-5/7-(KV) | 1962610000 | D.10 |
| SAISW-5/9-7/8" | 1291980000 | E.6 |
| SAISW-M-4/8 M12 | 1803930000 | C.32 |
| SAISW-M-4/8 M12 | 1803930000 | D.15 |
| SAISW-M-5/8 M12 | 1803940000 | C.32 |
| SAISW-M-5/8 M12 | 1803940000 | D.15 |
| SAISW-M-5/8 M12 B-COD | 1944570000 | C.12 |
| SAISW-M-5/8 M12 B-COD | 1944570000 | D.17 |
| SAISW-M-5/8 M12 B-COD | 1944570000 | D.5 |
| SAISW-M8-3P(TL) | 1920990000 | D.22 |
| SAISW-M8-3P(TL) | 1920990000 | D.6 |
| SAISW-M8-4P(TL) | 1921000000 | D.22 |
| SAISW-M8-4P(TL) | 1921000000 | D.6 |
| SAIV-M12BG-2/4-1.5U | 1939410150 | B.13 |
| SAIV-M12BG-4-1.5U | 9457950150 | B.13 |
| SAIV-M12BW-2/4-1.5U | 1939370150 | B.13 |
| SAIV-M12BW-4-1.5U | 9457960150 | B.13 |
| Screwty M12 K0 o. SD | 1900100000 | K.5 |
| Screwty M12f K0 o. SD | 1900120000 | K.5 |
| Screwty M23 | 1981560000 | K.5 |
| Screwty M8 K0 o. SD | 1900110000 | K.5 |
| Screwty M8F K0 o. SD | 1900130000 | K.5 |
| Screwty Set | 1910000000 | K.5 |
| Screwty Set -DM | 1920000000 | K.5 |
| Screwty- M12 | 1900000000 | K.5 |
| Screwty- M12 F | 1900020000 | K.5 |
| Screwty- M8 | 1900010000 | K.5 |
| Screwty- M8 F | 1900030000 | K.5 |
| Screwty-M12 F-DM | 1900021000 | K.5 |
| Screwty-M12-DM | 1900001000 | H.7 |
| Screwty-M12-DM | 1900001000 | I.27 |
| Screwty-M12-DM | 1900001000 | K.5 |
| Screwty-M8 F-DM | 1900031000 | K.5 |
| Screwty-M8-DM | 1900011000 | K.5 |
| SFC 0/12 NEUTRAL BL | 1813170000 | K.14 |
| SFC 0/12 NEUTRAL GE | 1813160000 | K.14 |
| SFC 0/12 NEUTRAL RT | 1813150000 | K.14 |
| SFC 0/12 NEUTRAL WS | 1813130000 | K.14 |
| SFC 0/21 NEUTRAL BL | 1813220000 | K.14 |
| SFC 0/21 NEUTRAL GE | 1813210000 | K.14 |
| SFC 0/21 NEUTRAL RT | 1813200000 | K.14 |
| SFC 0/21 NEUTRAL WS | 1813190000 | K.14 |
| SFC 0/30 NEUTRAL BL | 1813270000 | K.14 |
| SFC 0/30 NEUTRAL GE | 1813260000 | K.14 |
| SFC 0/30 NEUTRAL RT | 1813250000 | K.14 |
| SFC 0/30 NEUTRAL WS | 1813240000 | K.14 |
| SFC 1/12 NEUTRAL BL | 1747320002 | K.14 |
| SFC 1/12 NEUTRAL GE | 1747320004 | K.14 |
| SFC 1/12 NEUTRAL RT | 1747320003 | K.14 |
| SFC 1/12 NEUTRAL WS | 1747320001 | K.14 |
| SFC 1/21 NEUTRAL BL | 1779080002 | K.14 |
| SFC 1/21 NEUTRAL GE | 1779080004 | K.14 |
| SFC 1/21 NEUTRAL RT | 1779080003 | K.14 |
| SFC 1/21 NEUTRAL WS | 1779080001 | K.14 |
| SFC 1/30 NEUTRAL BL | 1805720000 | K.14 |
| SFC 1/30 NEUTRAL GE | 1805730000 | K.14 |
| SFC 1/30 NEUTRAL RT | 1805740000 | K.14 |
| SFC 1/30 NEUTRAL WS | 1805760000 | K.14 |
| SFC 2.5/12 MC NE BL | 1062030000 | K.14 |
| SFC 2.5/12 MC NE GE | 1062010000 | K.14 |
| SFC 2.5/12 MC NE RT | 1062020000 | K.14 |
| SFC 2.5/12 MC NE WS | 1062000000 | K.14 |
| SFC 2.5/12 MC SDR | 1062040000 | K.14 |
| SFC 2.5/21 MC NE BL | 1062090000 | K.14 |
| SFC 2.5/21 MC NE GE | 1062070000 | K.14 |
| SFC 2.5/21 MC NE RT | 1062080000 | K.14 |
| SFC 2.5/21 MC NE WS | 1062050000 | K.14 |
| SFC 2.5/21 MC SDR | 1062110000 | K.14 |
| SFC 2/12 NEUTRAL BL | 1758320002 | K.14 |
| SFC 2/12 NEUTRAL GE | 1758320004 | K.14 |
| SFC 2/12 NEUTRAL RT | 1758320003 | K.14 |
| SFC 2/12 NEUTRAL WS | 1758320001 | K.14 |
| SFC 2/21 NEUTRAL BL | 1805770000 | K.14 |
| SFC 2/21 NEUTRAL GE | 1805780000 | K.14 |
| SFC 2/21 NEUTRAL RT | 1805790000 | K.14 |
| SFC 2/21 NEUTRAL WS | 1805810000 | K.14 |
| SFC 2/30 NEUTRAL BL | 1805820000 | K.14 |
| SFC 2/30 NEUTRAL GE | 1805830000 | K.14 |
| SFC 2/30 NEUTRAL RT | 1805850000 | K.14 |
| SFC 2/30 NEUTRAL WS | 1805870000 | K.14 |
| SFC 3/12 MC NE BL | 1025250000 | K.14 |
| SFC 3/12 MC NE GE | 1025230000 | K.14 |
| SFC 3/12 MC NE RT | 1025240000 | K.14 |
| SFC 3/12 MC NE WS | 1025220000 | K.14 |
| SFC 3/12 MC SDR | 1025550000 | K.14 |
| SFC 3/21 MC NE BL | 1025300000 | K.14 |
| SFC 3/21 MC NE GE | 1025270000 | K.14 |
| SFC 3/21 MC NE RT | 1025290000 | K.14 |
| SFC 3/21 MC NE WS | 1025260000 | K.14 |
| SFC 3/21 MC SDR | 1025560000 | K.14 |
| SFC 3/30 MC NE BL | 1025340000 | K.14 |
| SFC 3/30 MC NE GE | 1025320000 | K.14 |
| SFC 3/30 MC NE RT | 1025330000 | K.14 |
| SFC 3/30 MC NE WS | 1025310000 | K.14 |

| Type | Order No. | Page |
|---|---|---|
| SFC 3/30 MC SDR | 1025570000 | K.14 |
| SIBL GH SAI | 1966200000 | G.13 |
| SIBL GH SAI | 1966200000 | G.6 |
| STRIPAX | 9005000000 | K.9 |
| STRIPAX ZERT | 9017330000 | K.9 |
| STRIPPER 6-16 RED-LINE | 9203110000 | K.8 |

## T

| | | |
|---|---|---|
| TM 203/18 V0 | 1798480000 | K.15 |
| TM 4/12 HF/HB | 1719840000 | C.69 |
| TM 4/18 HF/HB | 1719850000 | C.69 |
| TM-I 12 NEUTRAL GE | 1718411687 | C.69 |
| TM-I 18 NEUTRAL GE | 1718431687 | C.69 |
| TM-I 18 NEUTRAL WS | 1718431044 | K.15 |

## V

| | | |
|---|---|---|
| VG M16 - MS 1/EMV | 1909500000 | C.81 |
| VG M16-1/K68 | 1909860000 | C.81 |
| VG M16-1/MS68 | 1909910000 | C.81 |
| VG M16-EXE MS | 1737210000 | C.81 |
| VP M16-EXE SW | 1737070000 | C.81 |
| VP M16-MS65 | 1777730000 | C.81 |
| VT SF 5/21 NEUTRAL WS V0 | 1689470001 | C.69 |
| VT SF 6/21 NEUTRAL WS V0 | 1730560001 | C.69 |

## W

| | | |
|---|---|---|
| WK-1/4"(Screwty) | 1862200000 | K.5 |
| WS 10/5 MC BEDRUCKT | 1635010000 | K.16 |
| WS 10/5 MC NEUTRAL | 1635000000 | K.16 |
| WS 15/5 MC BEDRUCKT | 1609890000 | K.16 |
| WS 15/5 MC NEUTRAL | 1609880000 | K.16 |

| Order No. | Type | Page |
|---|---|---|

## 1000000000

| | | |
|---|---|---|
| 1001180001 | SAI-T-5S-PARA | K.15 |
| 1004310150 | SAI-T-5-M12/M12 B-COD | B.27 |
| 1004320150 | SAIL-M8GM8G-4S-0.2-CAN | B.27 |
| 1004330150 | SAIL-M8GM8G-4S-0.25-CAN | B.16 |
| 1005270150 | SAIL-M8GM8G-4S-0.3-CAN | B.37 |
| 1005460150 | SAIL-M8GM8G-4S-0.5-CAN | B.37 |
| 1006920000 | SAIL-M8GM8G-4S-0.8-CAN | F.39 |
| 1006930000 | SAIL-M8GM8G-4S-1.0-CAN | F.38 |
| 1006940000 | SAIL-M8GM8G-4S-1.5-CAN | F.38 |
| 1006980000 | SAIL-M8GM8G-4S-3.0-CAN | F.36 |
| 1007000150 | SAIL-M8GM8G-4S-3.5-CAN | B.16 |
| 1009370000 | SAIL-M8GM8G-4S-5.0-CAN | D.29 |

## 1010000000

| | | |
|---|---|---|
| 1010060000 | SAIL-M8GM8G-4S-7.0-CAN | D.21 |
| 1010070000 | SAIL-M8GM8G-4S-10-CAN | D.21 |
| 1010080000 | SAIL-M8GM8G-4S-10-CAN | D.21 |
| 1010090000 | SAIL-M8GM8G-4S-10-CAN | D.21 |
| 1010840015 | SAIL-M12WM12W-3-X.XU | C.74 |
| 1010840030 | SAIL-M12WM12G-3-X.XU | C.74 |
| 1010840050 | SAIB-3/7 | C.74 |
| 1010840100 | IE-C5DB4RE0100MCSXXX-X | C.74 |
| 1010850015 | IE-C5DB4RE0015MCSMCS-E | C.73 |
| 1010850030 | IE-C5DB4RE0030MCSMCS-E | C.73 |
| 1010850050 | IE-C5DB4RE0050MCSMCS-E | C.73 |
| 1010850100 | IE-C5DB4RE0100MCSMCS-E | C.73 |
| 1011970150 | SAIL-M12GM12G-5-1.5T | B.25 |
| 1011990150 | SAIL-M12GM12W-5-1.5T | B.25 |

## 1020000000

| | | |
|---|---|---|
| 1020930150 | SAIL-M12GM12W-4-3LW1.5T | B.27 |
| 1021280000 | SAISW-3/7 | D.5 |
| 1021290000 | SAISW-3/9 | D.7 |
| 1021310000 | SAIBW-3/7 | D.5 |
| 1021320000 | SAIBW-3/9 | D.7 |
| 1021470000 | SAIS-3/7 | D.5 |
| 1021480000 | SAIS-3/9 | D.5 |
| 1021490000 | SAIB-3/7 | D.7 |
| 1021510000 | SAIB-3/9 | D.5 |
| 1021650150 | SAIL-M12G-5-1.5T | B.11 |
| 1021660150 | SAIL-M12W-5-1.5T | B.11 |
| 1021670150 | SAIL-M12BG-5-1.5T | B.11 |
| 1021690150 | SAIL-M12BW-5-1.5T | B.11 |
| 1021710150 | SAIL-M12GM12G-3-1.5T | B.25 |
| 1021720150 | SAIL-M12GM12W-3-1.5T | B.25 |
| 1021730150 | SAIL-M12GM12G-4-1.5T | B.25 |
| 1021740150 | SAIL-M12GM12W-4-1.5T | B.25 |
| 1021750150 | SAIL-M12G-3-1.5T | B.11 |
| 1021760150 | SAIL-M12W-3-1.5T | B.11 |
| 1021770150 | SAIL-M12G-4-1.5T | B.11 |
| 1021790150 | SAIL-M12W-4-1.5T | B.11 |
| 1024050000 | PRINTJET PRO 115V | K.15 |
| 1024140000 | PJ PRO TNAW | K.15 |
| 1024310000 | SAI-AU M8 PB GW 16DI | F.22 |
| 1025220000 | SFC 3/12 MC NE WS | K.14 |
| 1025230000 | SFC 3/12 MC NE GE | K.14 |
| 1025240000 | SFC 3/12 MC NE RT | K.14 |
| 1025250000 | SFC 3/12 MC NE BL | K.14 |
| 1025260000 | SFC 3/21 MC NE WS | K.14 |
| 1025270000 | SFC 3/21 MC NE GE | K.14 |
| 1025290000 | SFC 3/21 MC NE RT | K.14 |
| 1025300000 | SFC 3/21 MC NE BL | K.14 |
| 1025310000 | SFC 3/30 MC NE WS | K.14 |
| 1025320000 | SFC 3/30 MC NE GE | K.14 |
| 1025330000 | SFC 3/30 MC NE RT | K.14 |
| 1025340000 | SFC 3/30 MC NE BL | K.14 |
| 1025550000 | SFC 3/12 MC SDR | K.14 |
| 1025560000 | SFC 3/21 MC SDR | K.14 |
| 1025570000 | SFC 3/30 MC SDR | K.14 |
| 1025940015 | IE-C5DD4UG0015MCSXXX-X | C.70 |
| 1025940030 | IE-C5DD4UG0030MCSXXX-X | C.70 |
| 1025940050 | IE-C5DD4UG0050MCSXXX-X | C.70 |
| 1025940100 | IE-C5DD4UG0100MCSXXX-X | C.70 |
| 1025950005 | IE-C5DD4UG0005MCSMCS-E | C.69 |
| 1025950015 | IE-C5DD4UG0015MCSMCS-E | C.69 |
| 1025950030 | IE-C5DD4UG0030MCSMCS-E | C.69 |
| 1025950050 | IE-C5DD4UG0050MCSMCS-E | C.69 |
| 1025950100 | IE-C5DD4UG0100MCSMCS-E | C.69 |
| 1026090000 | SAI-ASI T FF small | C.61 |
| 1027040000 | PJ PRO TNTK INK K | K.15 |
| 1027050000 | PJ PRO TNTK INK C | K.15 |
| 1027060000 | PJ PRO TNTK INK M | K.15 |
| 1027070000 | PJ PRO TNTK INK Y | K.15 |
| 1027110000 | PJ PRO TINTENSET FARBE | K.15 |

## 1040000000

| | | |
|---|---|---|
| 1044470010 | IE-C5DD4UG0010MCSA20-E | C.70 |
| 1044470015 | IE-C5DD4UG0015MCSA20-E | C.70 |
| 1044470030 | IE-C5DD4UG0030MCSA20-E | C.70 |
| 1044470050 | IE-C5DD4UG0050MCSA20-E | C.70 |
| 1044470100 | IE-C5DD4UG0100MCSA20-E | C.70 |

| Order No. | Type | Page |
|---|---|---|

## 1050000000

| | | |
|---|---|---|
| 1051760000 | SAI-4-S 3P M8 L 0L | I.52 |
| 1057720000 | SAI-6-S 3P M8 L SL | I.53 |
| 1057740150 | SAIL-M12BG-3B-1.5U | B.43 |
| 1057750150 | SAIL-M12BG-4B-1.5U | B.43 |
| 1057760150 | SAIL-M12BW-5B-1.5U | B.43 |
| 1057770150 | SAIL-M12G-3B-1.5U | B.43 |
| 1057780150 | SAIL-M12G-4B-1.5U | B.43 |
| 1057790150 | SAIL-M12G-5B-1.5U | B.43 |
| 1057800150 | SAIL-M12W-3B-1.5U | B.43 |
| 1057810150 | SAIL-M12W-4B-1.5U | B.43 |
| 1057820150 | SAIL-M12W-5B-1.5U | B.43 |
| 1057830150 | SAIL-M12GM12G-3B-1.5U | B.44 |
| 1057840150 | SAIL-M12GM12G-4B-1.5U | B.44 |
| 1057850150 | SAIL-M12GM12G-5B-1.5U | B.44 |
| 1057870150 | SAIL-M12WM12G-3B-1.5U | B.44 |
| 1057880150 | SAIL-M12WM12G-4B-1.5U | B.44 |
| 1057890150 | SAIL-M12WM12G-5B-1.5U | B.44 |
| 1057900150 | SAIL-M12GM12W-3B-1.5U | B.44 |
| 1057910150 | SAIL-M12GM12W-4B-1.5U | B.44 |
| 1057920150 | SAIL-M12GM12W-5B-1.5U | B.44 |
| 1057940000 | SAI-T-5-M12/M12 B-COD | D.29 |
| 1058490150 | SAIL-M12GM12G-3S1.5U | B.28 |
| 1058500150 | SAIL-M12GM12G-4S1.5U | B.28 |
| 1058510150 | SAIL-M12GM12G-5S1.5U | B.28 |
| 1058530150 | SAIL-M8GM8G-4S-0.5-CAN | C.6 |
| 1058540150 | SAIL-M8GM8G-4S-0.8-CAN | C.6 |
| 1058570150 | SAIL-M8GM8G-4S-1.0-CAN | C.7 |
| 1058630000 | SAIL-M8GM8G-4S-1.5-CAN | C.66 |
| 1059330015 | SAIL-M8GM8G-4S-3.0-CAN | C.69 |
| 1059330030 | SAIL-M8GM8G-4S-3.5-CAN | C.69 |
| 1059330050 | SAIL-M8GM8G-4S-5.0-CAN | C.69 |
| 1059330100 | SAIL-M8GM8G-4S-7.0-CAN | C.69 |
| 1059340015 | SAIL-M8GM8G-4S-10-CAN | C.73 |
| 1059340030 | SAIL-M8GM8G-4S-10-CAN | C.73 |
| 1059340050 | IE-C5DB4RE0050MSSMCS-E | C.73 |
| 1059340100 | IE-C5DB4RE0100MSSMCS-E | C.73 |
| 1059430000 | SAI-8-M-4P M12 DIP | I.14 |
| 1059470150 | SAIL-M12GM12W-3S1.5U | B.28 |
| 1059480150 | SAIL-M12GM12W-4S1.5U | B.28 |
| 1059540150 | SAIL-M12GM12W-5S1.5U | B.28 |
| 1059650150 | SAIL-M12W-4S1.5U | B.17 |
| 1059720150 | SAIL-M12WM12W-3S1.5U | B.28 |
| 1059730150 | SAIL-M12WM12W-4S1.5U | B.28 |
| 1059740150 | SAIL-M12WM12W-5S1.5U | B.28 |
| 1059750015 | IE-C5DD4UG0015MCAXXX-X | C.72 |
| 1059750030 | IE-C5DD4UG0030MCAXXX-X | C.72 |
| 1059750050 | IE-C5DD4UG0050MCAXXX-X | C.72 |
| 1059750100 | IE-C5DD4UG0100MCAXXX-X | C.72 |
| 1059770015 | IE-C5DD4UG0015MCSMCA-E | C.71 |
| 1059770030 | IE-C5DD4UG0030MCSMCA-E | C.71 |
| 1059770050 | IE-C5DD4UG0050MCSMCA-E | C.71 |
| 1059770100 | IE-C5DD4UG0100MCSMCA-E | C.71 |
| 1059890015 | IE-C5DD4UG0015MCAMCA-E | C.71 |
| 1059890030 | IE-C5DD4UG0030MCAMCA-E | C.71 |
| 1059890050 | IE-C5DD4UG0050MCAMCA-E | C.71 |
| 1059890100 | IE-C5DD4UG0100MCAMCA-E | C.71 |
| 1059900015 | IE-C5DB4RE0015MCAXXX-X | C.76 |
| 1059900030 | IE-C5DB4RE0030MCAXXX-X | C.76 |
| 1059900050 | IE-C5DB4RE0050MCAXXX-X | C.76 |
| 1059900100 | IE-C5DB4RE0100MCAXXX-X | C.76 |
| 1059940015 | IE-C5DB4RE0015MCSMCA-E | C.75 |
| 1059940030 | IE-C5DB4RE0030MCSMCA-E | C.75 |
| 1059940050 | IE-C5DB4RE0050MCSMCA-E | C.75 |
| 1059940100 | IE-C5DB4RE0100MCSMCA-E | C.75 |
| 1059970015 | IE-C5DB4RE0015MCAMCA-E | C.75 |
| 1059970030 | IE-C5DB4RE0030MCAMCA-E | C.75 |
| 1059970050 | IE-C5DB4RE0050MCAMCA-E | C.75 |
| 1059970100 | IE-C5DB4RE0100MCAMCA-E | C.75 |

## 1060000000

| | | |
|---|---|---|
| 1060110150 | SAIL-M12G-CD-1.5B | C.62 |
| 1060120150 | SAIL-M12BG-CD-1.5B | C.62 |
| 1060130150 | SAIL-M12GM12G-CD-1.5B | C.63 |
| 1060730000 | SAI-Y-4S-M12/M12 | D.28 |
| 1061880150 | SAIL-M12BG-5B-1.5U | B.43 |
| 1061890150 | SAIL-M12BW-3B-1.5U | B.43 |
| 1061900150 | SAIL-M12BW-4B-1.5U | B.43 |
| 1061910150 | SAIL-M12WM12W-3B-1.5U | B.44 |
| 1061920150 | SAIL-M12WM12W-4B-1.5U | B.44 |
| 1061930150 | SAIL-M12WM12W-5B-1.5U | B.44 |
| 1061970150 | SAIL-M12W-PB-1.5D | C.6 |
| 1061980150 | SAIL-M12BW-CD-1.5A | C.62 |
| 1061990150 | SAIL-M12GM12W-CD-1.5A | C.63 |
| 1062000000 | SFC 2.5/12 MC NE WS | K.14 |
| 1062010000 | SFC 2.5/12 MC NE GE | K.14 |
| 1062020000 | SFC 2.5/12 MC NE RT | K.14 |
| 1062030000 | SFC 2.5/12 MC NE BL | K.14 |
| 1062040000 | SFC 2.5/12 MC SDR | K.14 |
| 1062050000 | SFC 2.5/21 MC NE WS | K.14 |
| 1062070000 | SFC 2.5/21 MC NE GE | K.14 |
| 1062080000 | SFC 2.5/21 MC NE RT | K.14 |
| 1062090000 | SFC 2.5/21 MC NE BL | K.14 |
| 1062110000 | SFC 2.5/21 MC SDR | K.14 |
| 1062150150 | SAIL-M12WM12W-CD-1.5A | C.63 |
| 1062170150 | SAIL-M12W-CD-1.5B | C.62 |
| 1062180150 | SAIL-M12BW-CD-1.5B | C.62 |

| Order No. | Type | Page |
|---|---|---|

| | | |
|---|---|---|
| 1062190150 | SAIL-M12GM12W-CD-1.5B | C.63 |
| 1062210150 | SAIL-M12WM12W-CD-1.5B | C.63 |
| 1062220150 | SAIL-M12W-CD-1.5A | C.62 |
| 1062300150 | SAIL-M12BW-PB-1.5D | C.6 |
| 1062310150 | SAIL-M12GM12W-PB-1.5D | C.7 |
| 1062330150 | SAIL-M12WM12W-PB-1.5D | C.7 |
| 1062340150 | SAIL-M12W-PB-1.5E | C.6 |
| 1062370150 | SAIL-M12BW-PB-1.5E | C.6 |
| 1062380150 | SAIL-M12GM12W-PB-1.5E | C.7 |
| 1062400150 | SAIL-M12WM12W-PB-1.5E | C.7 |

## 1070000000

| | | |
|---|---|---|
| 1070630000 | SAI-4-F 5P M12 L 5M | I.9 |
| 1070640000 | SAI-4-F 5P M12 L 10M | I.9 |
| 1070650000 | SAI-4-F 4P M12 L 5M | I.9 |
| 1070660000 | SAI-4-F 4P M12 L 10M | I.9 |
| 1075390100 | FBCEX PA M12 M-FMA 1M | C.29 |
| 1075410100 | FBCEX PA M12 MA-FMA 1M | C.29 |
| 1075450100 | FBCEX PA M12 MA-FM 1M | C.29 |
| 1075460100 | FBC PA M12 MA-FM 1M | C.29 |
| 1075620100 | FBC PA M12 M-FMA 1M | C.29 |
| 1076520100 | FBCEX PA M12 FMA 1M | C.28 |
| 1076530100 | FBC PA M12 FMA 1M | C.28 |
| 1076540100 | FBC PA M12 MA 1M | C.28 |
| 1076550100 | FBC PA M12 MA-FMA 1M | C.29 |
| 1076580100 | FBCEX PA M12 MA 1M | C.28 |
| 1077750150 | SAIL-M12G-4-1.5UGE | B.11 |
| 1078720000 | SAIE-M8S-4-0.5U-FP-M8 | D.36 |
| 1078730000 | SAIE-M8S-3-0.5U-FP-M8 | D.36 |

## 1090000000

| | | |
|---|---|---|
| 1092910150 | SAIL-M12BG-3-1.5UGE | B.11 |
| 1092920150 | SAIL-M12BG-4-1.5UGE | B.11 |
| 1092930150 | SAIL-M12BG-5-1.5UGE | B.11 |
| 1092940150 | SAIL-M12BW-3-1.5UGE | B.11 |
| 1092950150 | SAIL-M12BW-4-2L1.5UGE | B.16 |
| 1092960150 | SAIL-M12BW-4-1.5UGE | B.11 |
| 1092970150 | SAIL-M12BW-5-1.5UGE | B.11 |
| 1092980150 | SAIL-M12G-3-1.5UGE | B.11 |
| 1092990150 | SAIL-M12G-5-1.5UGE | B.11 |
| 1093000150 | SAIL-M12GM12G-2/4-1.5UGE | B.26 |
| 1093010150 | SAIL-M12GM12G-3-1.5UGE | B.25 |
| 1093020150 | SAIL-M12GM12G-4-1.5UGE | B.25 |
| 1093030150 | SAIL-M12GM12G-5-1.5UGE | B.25 |
| 1093040150 | SAIL-M12GM12W-2/4-1.5UGE | B.26 |
| 1093050150 | SAIL-M12GM12W-3-1.5UGE | B.25 |
| 1093060150 | SAIL-M12GM12W-4-3LW1.5UGE | B.27 |
| 1093070150 | SAIL-M12GM12W-4-1.5UGE | B.25 |
| 1093080150 | SAIL-M12GM12W-5-1.5UGE | B.25 |
| 1093110150 | SAIL-M12GM8W-3L1.5UGE | B.31 |
| 1093130150 | SAIL-M12GM8W-4L1.5UGE | B.31 |
| 1093150150 | SAIL-M12GM8WR-3-1.5UGE | B.30 |
| 1093160150 | SAIL-M12W-3-1.5UGE | B.11 |
| 1093170150 | SAIL-M12W-4-1.5UGE | B.11 |
| 1093180150 | SAIL-M12W-5-1.5UGE | B.11 |
| 1093190150 | SAIL-M8BG-3-1.5UGE | B.19 |
| 1093200150 | SAIL-M8BG-4-1.5UGE | B.19 |
| 1093210150 | SAIL-M8BW-3L1.5UGE | B.21 |
| 1093220150 | SAIL-M8BW-3-1.5UGE | B.19 |
| 1093230150 | SAIL-M8BW-4L1.5UGE | B.21 |
| 1093240150 | SAIL-M8BW-4-1.5UGE | B.19 |
| 1093250150 | SAIL-ZW-M8BG-3-1.5UGE | B.39 |
| 1093260150 | SAIL-ZW-M8BW-3-1.5UGE | B.39 |
| 1099760150 | SAIL-VSA-M8G-3-1.5U | B.53 |
| 1099770150 | SAIL-VSBD-M8G-3-1.5U | B.54 |

## 1100000000

| | | |
|---|---|---|
| 1104470150 | SAIL-M8GM8G-3-1.5UGE | B.32 |
| 1108670150 | SAIP-M12W-3-1.5U | B.12 |
| 1108680150 | SAIP-M12W-4-1.5U | B.12 |
| 1108690150 | SAIP-M12W-5-1.5U | B.12 |
| 1108730150 | SAIP-M12BG-3-1.5U | B.12 |
| 1108740150 | SAIP-M12BG-4-1.5U | B.12 |
| 1108750150 | SAIP-M12BG-5-1.5U | B.12 |
| 1108770150 | SAIP-M12BW-3-1.5U | B.12 |
| 1108780150 | SAIP-M12BW-4-1.5U | B.12 |
| 1108790150 | SAIP-M12BW-5-1.5U | B.12 |
| 1108800150 | SAIP-M12G-3-1.5U | B.12 |
| 1108810150 | SAIP-M12G-4-1.5U | B.12 |
| 1108820150 | SAIP-M12G-5-1.5U | B.12 |

## 1110000000

| | | |
|---|---|---|
| 1114880150 | SAIL-M12BW-3L1.5UGE | B.16 |
| 1117970000 | SAIS-M16-4/9 | D.27 |
| 1117990000 | SAIS-M16-5/9 | D.27 |
| 1118010000 | SAIS-M16-7/9 | D.27 |
| 1118910000 | SAISM-8/11S-M12 | D.14 |
| 1118920000 | SAIBM-8/11S-M12 | D.14 |
| 1119030000 | ERME 10² SPX 4 | K.9 |

## 1130000000

| | | |
|---|---|---|
| 1139330000 | SAIBW-4/8S-M12 4P D-ZF | D.18 |

| Order No. | Type | Page |
|---|---|---|

## 1140000000

| | | |
|---|---|---|
| 1140640000 | PB-DP SUB-D M12 TERM PS | C.17 |
| 1140650000 | PB-DP SUB-D M12 TERM | C.16 |

## 1160000000

| | | |
|---|---|---|
| 1160550000 | SAISW-4/8S-M12-4P D-COD | C.77 |
| 1160820010 | SAIL-M8G-4S0.1UIE | C.68 |
| 1160820030 | SAIL-M8G-4S0.3UIE | C.68 |
| 1160820050 | SAIL-M8G-4S0.5UIE | C.68 |
| 1160820100 | SAIL-M8G-4S1.0UIE | C.68 |
| 1160820200 | SAIL-M8G-4S2.0UIE | C.68 |
| 1160820300 | SAIL-M8G-4S3.0UIE | C.68 |
| 1160820400 | SAIL-M8G-4S4.0UIE | C.68 |
| 1160820500 | SAIL-M8G-4S5.0UIE | C.68 |
| 1160820750 | SAIL-M8G-4S7.5UIE | C.68 |
| 1160821000 | SAIL-M8G-4S10UIE | C.68 |
| 1160930010 | SAIL-M8GM8SG-4S0.1UIE | C.68 |
| 1160930030 | SAIL-M8GM8SG-4S0.3UIE | C.68 |
| 1160930050 | SAIL-M8GM8SG-4S0.5UIE | C.68 |
| 1160930100 | SAIL-M8GM8SG-4S1.0UIE | C.68 |
| 1160930200 | SAIL-M8GM8SG-4S2.0UIE | C.68 |
| 1160930300 | SAIL-M8GM8SG-4S3.0UIE | C.68 |
| 1160930400 | SAIL-M8GM8SG-4S4.0UIE | C.68 |
| 1160930500 | SAIL-M8GM8SG-4S5.0UIE | C.68 |
| 1160930750 | SAIL-M8GM8SG-4S7.5UIE | C.68 |
| 1160931500 | SAIL-M8GM8SG-4S15UIE | C.68 |
| 1160932000 | SAIL-M8GM8SG-4S20UIE | C.68 |
| 1160933000 | SAIL-M8GM8SG-4S30UIE | C.68 |
| 1160934000 | SAIL-M8GM8SG-4S40UIE | C.68 |
| 1160935000 | SAIL-M8GM8SG-4S50UIE | C.68 |
| 1161870000 | PB-DP SUB-D ZF TERM | C.21 |
| 1161880000 | PB-DP SUB-D ZF TERM PS | C.21 |
| 1161890000 | PB-DP SUB-D ZF | C.20 |
| 1169900000 | SAI-M23-KS-7/12 | J.12 |
| 1169920000 | SAI-M23-GS-S-7/12 | J.12 |
| 1169930000 | SAIL-M23-KSW-7/12 | J.12 |
| 1169940000 | SAIE-M23-S-VW | J.13 |
| 1169950000 | SAIE-M23-S-RM | J.13 |
| 1169970000 | SAIE-M23-S-EM | J.13 |
| 1169980000 | SAIE-M23-S-W | J.13 |
| 1169990000 | SAIE-M23-S-HW | J.13 |

## 1170000000

| | | |
|---|---|---|
| 1170000000 | SAI-M23-SE-6 | J.14 |
| 1170020000 | SAI-M23-BE-6 | J.14 |
| 1170030000 | SAI-M23-SE-7 | J.14 |
| 1170040000 | SAI-M23-BE-7 | J.14 |
| 1170050000 | SAI-M23-SE-9 | J.14 |
| 1170060000 | SAI-M23-BE-9 | J.14 |
| 1170070000 | SAI-M23-SE-12 | J.14 |
| 1170080000 | SAI-M23-SE-16 | J.15 |
| 1170090000 | SAI-M23-BE-16 | J.15 |
| 1170100000 | SAI-M23-SE-17 | J.15 |
| 1170110000 | SAI-M23-BE-17 | J.15 |
| 1170120000 | SAI-M23-SE-19 | J.15 |
| 1170130000 | SAI-M23-BE-19 | J.15 |
| 1170140000 | SAI-M23-KSC-0.08/0.56 | J.16 |
| 1170150000 | SAI-M23-KSC-0.14/1.00 | J.16 |
| 1170150000 | SAI-M23-KSC-0.14/1.00 | K.12 |
| 1170170000 | SAI-M23-KSC-1.00-1.5 | J.16 |
| 1170180000 | SAI-M23-KBC-0.34/1.00 | J.16 |
| 1170180000 | SAI-M23-KBC-0.34/1.00 | K.12 |
| 1170210000 | SAI-M23-KBC-1.00-1.5 | J.16 |
| 1170220000 | SAI-M23-KSC-1.5-0.14-1 | J.16 |
| 1170220000 | SAI-M23-KSC-1.5-0.14-1 | K.12 |
| 1170230000 | SAI-M23-KBC-1.5-.14-.56 | J.16 |
| 1170230000 | SAI-M23-KBC-1.5-.14-.56 | K.12 |
| 1170240000 | SAI-M23-KBC-1.5-.56-1.0 | J.16 |
| 1170240000 | SAI-M23-KBC-1.5-.56-1.0 | K.12 |
| 1170250000 | SAI-M23-KSC-2-0.75-2.5 | J.17 |
| 1170250000 | SAI-M23-KSC-2-0.75-2.5 | K.12 |
| 1170260000 | SAI-M23-KBC-2-0.75-2.5 | J.17 |
| 1170260000 | SAI-M23-KBC-2-0.75-2.5 | K.12 |
| 1170270000 | SAI-M23-KS-L-7/12 | J.26 |
| 1170280000 | SAI-M23-GSW-L-7/12 | J.26 |
| 1170290000 | SAI-M23-KSW-L-7/12 | J.26 |
| 1170300000 | SAIE-M23-L-VW | J.27 |
| 1170310000 | SAIE-M23-L-RM | J.27 |
| 1170320000 | SAIE-M23-L-EM | J.27 |
| 1170330000 | SAIE-M23-L-W | J.27 |
| 1170340000 | SAIE-M23-L-HW | J.27 |
| 1170350000 | SAI-M23-SE-L-6 | J.28 |
| 1170370000 | SAI-M23-BE-L-6 | J.28 |
| 1170380000 | SAI-M23-SE-L-4/4 | J.28 |
| 1170390000 | SAI-M23-KSC-0,25-1.0 | J.29 |
| 1170390000 | SAI-M23-KSC-0,25-1.0 | K.12 |
| 1170400000 | SAI-M23-KSC-L-0.75-2.5 | J.29 |
| 1170400000 | SAI-M23-KSC-L-0.75-2.5 | K.12 |
| 1170410000 | SAI-M23-KSC-L-2.5-4.0 | J.29 |
| 1170410000 | SAI-M23-KSC-L-2.5-4.0 | K.12 |
| 1170420000 | SAI-M23-KBC-L-2.5-4.0 | J.29 |
| 1170420000 | SAI-M23-KBC-L-2.5-4.0 | K.12 |
| 1173220000 | PB-DP SUB-D ZF35TERM | C.18 |
| 1173240000 | PB-DP SUB-D ZF35TERM PS | C.19 |

| Order No. | Type | Page |
|---|---|---|

## 1190000000

| | | |
|---|---|---|
| 1191020000 | SAIB-5/6S M12 5P A-COD | C.32 |
| 1191020000 | SAIB-5/6S M12 5P A-COD | D.15 |
| 1191030000 | SAISM-5/6S M12 5P A-COD | D.5 |

## 1200000000

| | | |
|---|---|---|
| 1201210200 | SAIL-M8GRJ45-4S2.0UIE | C.68 |
| 1201210500 | SAIL-M8GRJ45-4S5.0UIE | C.68 |
| 1201210750 | SAIL-M8GRJ45-4S7.5UIE | C.68 |
| 1201211000 | SAIL-M8GRJ45-4S10UIE | C.68 |
| 1203840000 | SAI M23 CRIMPING TOOL 1 | K.12 |
| 1203960000 | SAI M23 CRIMPING TOOL 2 | K.13 |

## 1210000000

| | | |
|---|---|---|
| 1216820020 | SAIL-M8GM8G-4S-0.2-CAN | C.64 |
| 1216820025 | SAIL-M8GM8G-4S-0.25-CAN | C.64 |
| 1216820030 | SAIL-M8GM8G-4S-0.3-CAN | C.64 |
| 1216820050 | SAIL-M8GM8G-4S-0.5-CAN | C.64 |
| 1216820080 | SAIL-M8GM8G-4S-0.8-CAN | C.64 |
| 1216820100 | SAIL-M8GM8G-4S-1.0-CAN | C.64 |
| 1216820150 | SAIL-M8GM8G-4S-1.5-CAN | C.64 |
| 1216820300 | SAIL-M8GM8G-4S-3.0-CAN | C.64 |
| 1216820350 | SAIL-M8GM8G-4S-3.5-CAN | C.64 |
| 1216820500 | SAIL-M8GM8G-4S-5.0-CAN | C.64 |
| 1216820700 | SAIL-M8GM8G-4S-7.0-CAN | C.64 |
| 1216821000 | SAIL-M8GM8G-4S-10-CAN | C.64 |

## 1220000000

| | | |
|---|---|---|
| 1222270050 | SAIL-M8GM8G-4S-10-CAN | D.38 |
| 1223650050 | SAIL-M8GM8G-4S-10-CAN | D.38 |
| 1224000000 | SAIL-M12WM12W-3-X.XU | J.20 |
| 1224010000 | SAIL-M12WM12G-3-X.XU | J.20 |
| 1224020000 | SAIB-3/7 | J.20 |
| 1224030000 | SAIL-M12GM12G-3-X.XV | J.20 |
| 1224040000 | SAI-M23-BE-6-17MM | J.20 |
| 1224050000 | SAI-M23-SE-6-10MM | J.20 |
| 1224060000 | SAI-M23-SE-6-17MM | J.20 |
| 1224070000 | SAI-M23-SE-7-F | J.20 |
| 1224080000 | SAI-M23-BE-7-F | J.20 |
| 1224090000 | SAI-M23-SE-7-3.5MM | J.20 |
| 1224100000 | SAI-M23-BE-7-3.5MM | J.20 |
| 1224110000 | SAI-M23-BE-7-17MM | J.20 |
| 1224120000 | SAI-M23-SE-7-10MM | J.20 |
| 1224130000 | SAI-M23-SE-7-17MM | J.20 |
| 1224140000 | SAI-M23-SE-12-F | J.21 |
| 1224150000 | SAI-M23-BE-12-F | J.21 |
| 1224160000 | SAI-M23-SE-12-3.5MM | J.21 |
| 1224170000 | SAI-M23-BE-12-10MM | J.21 |
| 1224180000 | SAI-M23-SE-12-3.5MM-PE | J.21 |
| 1224190000 | SAI-M23-BE-12-3.5MM-PE | J.21 |
| 1224210000 | SAI-M23-BE-12-17MM | J.21 |
| 1224220000 | SAI-M23-SE-12-10MM | J.21 |
| 1224230000 | SAI-M23-SE-12-17MM | J.21 |
| 1224240000 | SAI-M23-SE-16-F | J.22 |
| 1224250000 | SAI-M23-BE-16-F | J.22 |
| 1224260000 | SAI-M23-SE-16-3.5MM | J.22 |
| 1224270000 | SAI-M23-BE-16-3.5MM | J.22 |
| 1224280000 | SAI-M23-BE-16-17MM | J.22 |
| 1224290000 | SAI-M23-SE-16-10MM | J.22 |
| 1224310000 | SAI-M23-SE-16-17MM | J.22 |
| 1224320000 | SAI-M23-SE-17-F | J.22 |
| 1224330000 | SAI-M23-BE-17-F | J.22 |
| 1224340000 | SAI-M23-SE-17-3.5MM | J.22 |
| 1224350000 | SAI-M23-BE-17-10 MM | J.22 |
| 1224360000 | SAI-M23-BE-17-17MM | J.22 |
| 1224370000 | SAI-M23-SE-17-10MM | J.22 |
| 1224380000 | SAI-M23-SE-17-17MM | J.22 |
| 1224390000 | SAI-M23-SE-19-F | J.23 |
| 1224400000 | SAI-M23-BE-19-F | J.23 |
| 1224410000 | SAI-M23-SE-19-3.5MM | J.23 |
| 1224420000 | SAI-M23-BE-19-10MM | J.23 |
| 1224430000 | SAI-M23-SE-19-10MM-PE | J.23 |
| 1224440000 | SAI-M23-SE-19-3.5MM-PE | J.23 |
| 1224450000 | SAI-M23-BE-19-17MM | J.23 |
| 1224460000 | SAI-M23-SE-19-3,5MMPE12 | J.23 |
| 1224470000 | SAI-M23-SE-19-10MM | J.23 |
| 1224480000 | SAI-M23-SE-19-17MM | J.23 |
| 1224490000 | SAI-M23-SE-9-F | J.21 |
| 1224500000 | SAI-M23-BE-9-F | J.21 |
| 1224510000 | SAI-M23-SE-9-3.5MM | J.21 |
| 1224520000 | SAI-M23-BE-9-10MM | J.21 |
| 1224530000 | SAI-M23-BE-9-17MM | J.21 |
| 1224540000 | SAI-M23-SE-9-10MM | J.21 |
| 1224550000 | SAI-M23-SE-9-17MM | J.21 |
| 1224560000 | SAI-M23-SE-12-F-G | J.21 |
| 1224570000 | SAI-M23-BE-12-F-G | J.21 |
| 1224580000 | SAI-M23-SE-12-3.5MM-G | J.21 |
| 1224590000 | SAI-M23-BE-12-10MM-G | J.21 |
| 1224610000 | SAI-M23-BE-12-10MM-PE-G | J.21 |
| 1224620000 | SAI-M23-SE-12-10MM-PE-G | J.21 |
| 1224630000 | SAI-M23-SE-12-12MM-G | J.21 |
| 1224640000 | SAI-M23-SE-12-17MM-G | J.21 |
| 1224650000 | SAI-M23-SE-17-F-G | J.22 |
| 1224660000 | SAI-M23-BE-17-F-G | J.22 |
| 1224670000 | SAI-M23-SE-17-3.5MM-G | J.22 |
| 1224680000 | SAI-M23-BE-17-10MM-G | J.22 |
| 1224690000 | SAI-M23-BE-17-17MM-G | J.22 |
| 1224710000 | SAI-M23-SE-17-10MM-G | J.22 |
| 1224720000 | SAI-M23-SE-17-17MM-G | J.22 |
| 1224730000 | SAI-M23-SE-9-F-G | J.21 |
| 1224740000 | SAI-M23-BE-9-F-G | J.21 |
| 1224750000 | SAI-M23-BE-9-10MM-G | J.21 |
| 1224760000 | SAI-M23-BE-9-17MM-G | J.21 |
| 1224770000 | SAI-M23-SE-9-10MM-G | J.21 |
| 1224780000 | SAI-M23-SE-9-17MM-G | J.21 |

## 1230000000

| | | |
|---|---|---|
| 1232620000 | SAIH-PB-2X0.24-PUR | C.8 |
| 1232630000 | SAIH-PB-PA-2X1.0-PVC-BL | C.30 |
| 1232640000 | SAIH-PB-PA-2X1.0-PVC-SW | C.30 |
| 1235340000 | SAI-AU ET SET M12 A COD | G.7 |

## 1240000000

| | | |
|---|---|---|
| 1246490000 | SAI GHDE EA 8M12 | G.6 |
| 1246510000 | SAI GHDE EA 8M12 SIBL | G.6 |
| 1246520000 | SAI GHDE EA 16M8 0.SIBL | G.6 |
| 1246530000 | SAI RA 54 KU | G.6 |
| 1246540000 | SAI GHDE 3M12 1M8 SAI | G.8 |
| 1246550000 | SAI GHDE 3M12 1S2B | G.8 |
| 1246560000 | SAI GHDE 4M12 1S3B | G.6 |
| 1246570000 | SAI GHDE 4M12 2S2B | G.8 |
| 1246580000 | SAI GHDE 4M12 2X1S1B | G.8 |
| 1246590000 | SAI GHDE 4M12 3S1B | G.8 |
| 1246610000 | SAI GHDE 3M12 1PG9 | G.13 |
| 1246660000 | SAI RA 30 SB KU | G.9 |
| 1246670000 | SAI GHDE 30 SB LA M12 | G.10 |
| 1246680000 | SAI GHDE 30 SB LA SIBL | G.10 |
| 1246690000 | SAI GHDE 30 SB LA M8 | G.10 |
| 1246710000 | SAI BP 30 SB LA | G.10 |
| 1246720000 | SAI RA 30 SB LA | G.10 |
| 1246810000 | SAI GHDE 30 S KU M12 | G.9 |
| 1246820000 | SAI GHDE 30 S KU SI | G.9 |
| 1246830000 | SAI GHDE 30 S KU M8 | G.9 |
| 1246840000 | SAI BP 30 SB KU | G.9 |

## 1250000000

| | | |
|---|---|---|
| 1258930000 | SAIBM-8/9S-M12 | D.14 |
| 1258940000 | SAISM-8/9S-M12 | D.14 |
| 1259010150 | SAIL-M16BW-12-1.5U | B.40 |

## 1260000000

| | | |
|---|---|---|
| 1265920000 | SAI-6-F 4P M12 L 5M | I.10 |
| 1265930000 | SAI-6-F 4P M12 L 10M | I.10 |
| 1265940000 | SAI-6-S12 4P M12 L | I.11 |
| 1267330000 | SAI-4-S8 4P M12 L | I.11 |
| 1269790000 | SAIE-M16S-5-HWM | D.39 |

## 1270000000

| | | |
|---|---|---|
| 1271590015 | SAIL-VSB-M8G-3-0.15U | B.54 |
| 1275470150 | SAIL-M12BW-8S1.5U | B.15 |
| 1275750000 | SAIBW-5/8S-M12 5P A-ZF | D.5 |
| 1276060150 | SAIL-M12W-8S1.5U | B.15 |
| 1276450150 | SAIL-VSBD180-M8G-3-1.5U | B.54 |
| 1279410150 | SAIL-M12G-8-1.5U | B.14 |
| 1279420150 | SAIL-M12W-8-1.5U | B.14 |
| 1279430150 | SAIL-M12G-8S1.5U | B.15 |
| 1279440150 | SAIL-M12GM12G-8-1.5U | B.14 |
| 1279450150 | SAIL-M12GM12W-8-1.5U | B.14 |
| 1279460150 | SAIL-M12GM12G-8S1.5U | B.15 |
| 1279470150 | SAIL-M12GM12W-8S1.5U | B.15 |
| 1279480050 | SAIE-M12B-PB-0.5U HW | C.10 |
| 1279480100 | SAIE-M12B-PB-1.0U HW | C.10 |
| 1279480200 | SAIE-M12B-PB-2.0U HW | C.10 |
| 1279480300 | SAIL-M8GM8G-4S-10-CAN | C.10 |
| 1279490050 | SAIL-M8GM8G-4S-10-CAN | C.10 |
| 1279490100 | SAIL-M12WM12W-3-X.XU | C.10 |
| 1279490200 | SAIL-M12WM12G-3-X.XU | C.10 |
| 1279490300 | SAIL-M8GM8G-4S-10-CAN | C.10 |

## 1280000000

| | | |
|---|---|---|
| 1283550000 | SAIL-M12GM12G-3-X.XV | D.33 |
| 1289140000 | SAIL-M12GM12G-4-X.XV | D.33 |

## 1290000000

| | | |
|---|---|---|
| 1291870000 | SAIL-M12GM12G-5-X.XV | E.6 |
| 1291880000 | SAIL-M12GM12W-3-X.XV | E.7 |
| 1291890000 | SAIL-M12GM12W-4-X.XV | E.6 |
| 1291900000 | SAIL-M12GM12W-5-X.XV | E.7 |
| 1291910000 | SAIL-M12WM12W-3-X.XV | E.6 |
| 1291920000 | SAIL-M12WM12W-4-X.XV | E.7 |
| 1291930000 | SAIL-M12WM12W-5-X.XV | E.6 |
| 1291940000 | SAIL-M12GM12W-3LX.XV | E.7 |
| 1291950000 | SAIL-M12GM12W-4-2LX.XV | E.7 |
| 1291970000 | SAIS-5/11-7/8" | E.7 |
| 1291980000 | SAISW-5/9-7/8" | E.6 |
| 1291990000 | SAISW-5/11-7/8" | E.7 |
| 1292000000 | SAIB-5/9-7/8" | E.6 |
| 1292010000 | SAIB-5/11-7/8" | E.7 |
| 1292020000 | SAIBW-5/9-7/8" | E.6 |
| 1292030000 | SAIBW-5/11-7/8" | E.7 |
| 1292040000 | SAISW-4/11-7/8" | E.7 |
| 1292050000 | SAIB-4/11-7/8" | E.7 |
| 1292070000 | SAIBW-4/11-7/8" | E.7 |
| 1292080150 | SAIL-7/8"G-3-1.5U | E.11 |
| 1292090150 | SAIL-7/8"W-3-1.5U | E.11 |
| 1292100150 | SAIL-7/8"BG-3-1.5U | E.11 |
| 1292110150 | SAIL-7/8"BW-3-1.5U | E.11 |
| 1292120150 | SAIL-7/8"G-4-1.5U | E.11 |
| 1292130150 | SAIL-7/8"W-4-1.5U | E.11 |
| 1292140150 | SAIL-7/8"BG-4-1.5U | E.11 |
| 1292150150 | SAIL-7/8"BW-4-1.5U | E.11 |
| 1292170150 | SAIL-7/8"G-5-1.5U | E.11 |
| 1292180150 | SAIL-7/8"W-5-1.5U | E.11 |
| 1292190150 | SAIL-7/8"BG-5-1.5U | E.11 |
| 1292200150 | SAIL-7/8"BW-5-1.5U | E.11 |
| 1292330000 | SAIE-7/8"S-3-0.2U-PG11 | E.9 |
| 1292340000 | SAIE-7/8"S-3-0.2U-PG13.5 | E.10 |
| 1292350000 | SAIE-7/8"S-3-0.2U-H | E.8 |
| 1292370000 | SAIE-7/8"B-3-0.2U-PG11 | E.9 |
| 1292380000 | SAIE-7/8"B-3-0.2U-PG13.5 | E.10 |
| 1292390000 | SAIE-7/8"B-3-0.2U-H | E.8 |
| 1292400000 | SAIE-7/8"S-4-0.2U-PG11 | E.9 |
| 1292410000 | SAIE-7/8"S-4-0.2U-PG13.5 | E.10 |
| 1292420000 | SAIE-7/8"S-4-0.2U-H | E.8 |
| 1292430000 | SAIE-7/8"B-4-0.2U-PG11 | E.9 |
| 1292440000 | SAIE-7/8"B-4-0.2U-PG13.5 | E.10 |
| 1292450000 | SAIE-7/8"B-4-0.2U-H | E.8 |
| 1292470000 | SAIE-7/8"S-5-0.2-PG11 | E.9 |
| 1292480000 | SAIE-7/8"S-5-0.2U-PG13.5 | E.10 |
| 1292490000 | SAIE-7/8"S-5-0.2U-H | E.8 |
| 1292500000 | SAIE-7/8"B-5-0.2U-PG11 | E.9 |
| 1292510000 | SAIE-7/8"B-5-0.2U-PG13.5 | E.10 |
| 1292520000 | SAIE-7/8"B-5-0.2U-H | E.8 |
| 1296730000 | SAI-M23-BE-12-G | J.14 |
| 1299390000 | SAI-M23-GS-L-11/17 | J.12 |

## 1300000000

| | | |
|---|---|---|
| 1301220000 | SAIS-5/9-7/8" | E.6 |
| 1304390000 | SAIS-M16-6/9 | D.27 |
| 1304430000 | SAIS-M16-8/9 | D.27 |
| 1309680015 | SAIL-VSC-M8G-0.15U | B.55 |

## 1310000000

| | | |
|---|---|---|
| 1311690150 | SAIL-M12W-12-1.5U | B.14 |
| 1311700150 | SAIL-M12G-12-1.5U | B.14 |
| 1312970000 | SAIE-M12B-5-LP | D.37 |
| 1312980000 | SAIE-M12S-5-LP | D.37 |

## 1320000000

| | | |
|---|---|---|
| 1321700000 | SAIS-M16-2/9 | D.27 |
| 1324010000 | IE-PCB-M12X-S-180 | C.79 |
| 1324020000 | IE-PS-M12X-P-FH | C.79 |
| 1326720000 | SAIE-M16B-4-L | D.39 |
| 1326730000 | SAIE-M16B-5-L | D.39 |
| 1326740000 | SAIE-M16B-7-L | D.39 |

## 1340000000

| | | |
|---|---|---|
| 1341230050 | SAIE-M12S-5S0.5U HW | D.38 |
| 1341240050 | SAIE-M12S-8S0.5U HW | D.38 |
| 1344720000 | SAIH-SLL-3X1.0-16X0.5 | B.57 |
| 1345520000 | SAIH-SLL-3X0.34-UGE | B.56 |
| 1345530000 | SAIH-SLL-4X0.34-UGE | B.56 |
| 1345540000 | SAIH-SLL-5X0.34-UGE | B.56 |

## 1350000000

| | | |
|---|---|---|
| 1353700000 | SAIS-4/11-1.5 | D.9 |
| 1353730000 | SAIB-4/11-1.5 | D.9 |
| 1353740000 | SAIS-5/11-1.5 | D.9 |
| 1353750000 | SAIB-5/11-1.5 | D.9 |
| 1353770000 | SAIE-M12S-4-0.5U P9 1.5 | D.34 |
| 1353780000 | SAIE-M12B-4-0.5U P9 1.5 | D.34 |
| 1357320000 | SAIH-SLL-3X0.34 SI PUR | B.56 |
| 1357330000 | SAIH-SLL-4X0.34 SI PUR | B.56 |
| 1357340000 | SAIH-SLL-5X0.34 SI PUR | B.56 |

## 1390000000

| | | |
|---|---|---|
| 1393080000 | IE-PCB2-M12X-S-180 | C.79 |

## 1600000000

| | | |
|---|---|---|
| 1606530000 | BL 3.50/07/180 SN DKGN BX | I.43 |
| 1609801044 | DEK 5/5 MC-10 NEUT. WS | K.16 |
| 1609810000 | DEK 5/5 MC BEDRUCKT | K.16 |
| 1609880000 | WS 15/5 MC NEUTRAL | K.16 |
| 1609890000 | WS 15/5 MC BEDRUCKT | K.16 |
| 1609940000 | ESG 9/20 MC NEUTRAL WS | K.16 |

## 1630000000

| | | |
|---|---|---|
| 1635000000 | WS 10/5 MC NEUTRAL | K.16 |
| 1635010000 | WS 10/5 MC BEDRUCKT | K.16 |

## 1680000000

| | | |
|---|---|---|
| 1689470001 | VT SF 5/21 NEUTRAL WS V0 | C.69 |

## 1700000000

| | | |
|---|---|---|
| 1701230000 | SAI-4-M 5P M12 | I.7 |
| 1701231000 | SAI-4-M 5P M12 UT | I.7 |
| 1701232000 | SAI-4-MH-5P M12 | I.36 |
| 1701233000 | SAI-4-MHD-5P M12 | I.37 |
| 1701240000 | SAI-6-M 5P M12 | I.7 |
| 1701241000 | SAI-6-M 5P M12 UT | I.7 |
| 1701242000 | SAI-6-MH-5P M12 | I.36 |
| 1701243000 | SAI-6-MHD-5P M12 | I.37 |
| 1701250000 | SAI-8-M 5P M12 | I.7 |
| 1701251000 | SAI-8-M 5P M12 UT | I.7 |
| 1701252000 | SAI-8-MH-5P M12 | I.36 |
| 1701253000 | SAI-8-MHD-5P M12 | I.37 |
| 1705920000 | SAI-4-M 4P M12 | I.7 |
| 1705921000 | SAI-4 M 4P M12 UT | I.7 |
| 1705922000 | SAI-4-MH-4P M12 | I.36 |
| 1705923000 | SAI-4-MHD-4P M12 | I.37 |
| 1705930000 | SAI-6-M 4P M12 | I.7 |
| 1705931000 | SAI-6-M 4P M12 UT | I.7 |
| 1705932000 | SAI-6-MH-4P M12 | I.36 |
| 1705933000 | SAI-6-MHD-4P M12 | I.37 |
| 1705940000 | SAI-8-M 4P M12 | I.7 |
| 1705941000 | SAI-8-M 4P M12 UT | I.7 |
| 1705942000 | SAI-8-MH-4P M12 | I.36 |
| 1705943000 | SAI-8-MHD-4P M12 | I.37 |

## 1710000000

| | | |
|---|---|---|
| 1718411687 | TM-I 12 NEUTRAL GE | C.69 |
| 1718431044 | TM-I 18 NEUTRAL WS | K.15 |
| 1718431687 | TM-I 18 NEUTRAL GE | C.69 |
| 1719840000 | TM 4/12 HF/HB | C.69 |
| 1719850000 | TM 4/18 HF/HB | C.69 |

## 1720000000

| | | |
|---|---|---|
| 1724750000 | SAI-4/6/8-MH BL3.5 | I.7 |
| 1724750050 | SAI-4/6/8-MH BL3.5 SV | I.7 |
| 1724752000 | SAI-4/6/8 MH-MH BL 3.5 | I.36 |
| 1724753000 | SAI-4/6/8 MH-MHD BL 3.5 | I.37 |
| 1724754000 | SAI-4/6/8 MH-MM BL 3.5 | I.35 |

## 1730000000

| | | |
|---|---|---|
| 1730560001 | VT SF 6/21 NEUTRAL WS V0 | C.69 |
| 1736230000 | GWDR M16-NP | C.81 |
| 1737070000 | VP M16-EXE SW | C.81 |
| 1737210000 | VG M16-EXE MS | C.81 |

## 1740000000

| | | |
|---|---|---|
| 1740191000 | SAI-8-M 5P M12 OL UT | I.7 |
| 1747320001 | SFC 1/12 NEUTRAL WS | K.14 |
| 1747320002 | SFC 1/12 NEUTRAL BL | K.14 |
| 1747320003 | SFC 1/12 NEUTRAL RT | K.14 |
| 1747320004 | SFC 1/12 NEUTRAL GE | K.14 |

## 1750000000

| | | |
|---|---|---|
| 1752080000 | SAI-4/6/8-MH BLZF3.5 | I.7 |
| 1752080050 | SAI-4/6/8-MH BLZF3.5 SV | I.7 |
| 1758320001 | SFC 2/12 NEUTRAL WS | K.14 |
| 1758320002 | SFC 2/12 NEUTRAL BL | K.14 |
| 1758320003 | SFC 2/12 NEUTRAL RT | K.14 |
| 1758320004 | SFC 2/12 NEUTRAL GE | K.14 |

## 1760000000

| | | |
|---|---|---|
| 1760040000 | SAI-4-M 3P IDC | I.28 |
| 1760041000 | SAI-4-M 3P IDC UT | I.28 |
| 1760050000 | SAI-6-M 3P IDC | I.28 |
| 1760051000 | SAI-6-M 3P IDC UT | I.28 |
| 1760060000 | SAI-8-M 3P IDC | I.28 |
| 1760061000 | SAI-8-M 3P IDC UT | I.28 |
| 1766660000 | SAI-4-F 4P IDC PUR 5M | I.29 |
| 1766670000 | SAI-4-F 4P IDC PUR 10M | I.29 |
| 1766680000 | SAI-6-F 4P IDC PUR 5M | I.29 |
| 1766690000 | SAI-6-F 4P IDC PUR 10M | I.29 |
| 1766700000 | SAI-8-F 4P IDC PUR 5M | I.29 |
| 1766710000 | SAI-8-F 4P IDC PUR 10M | I.29 |
| 1766720000 | SAI-4-F 3P IDC PUR 5M | I.29 |
| 1766730000 | SAI-4-F 3P IDC PUR 10M | I.29 |
| 1766740000 | SAI-6-F 3P IDC PUR 5M | I.29 |
| 1766750000 | SAI-6-F 3P IDC PUR 10M | I.29 |
| 1766760000 | SAI-8-F 3P IDC PUR 5M | I.29 |
| 1766770000 | SAI-8-F 3P IDC PUR 10M | I.29 |
| 1766780000 | SAI-4-M 4P IDC | I.28 |
| 1766781000 | SAI-4-M 4P IDC UT | I.28 |
| 1766790000 | SAI-6-M 4P IDC | I.28 |
| 1766791000 | SAI-6-M 4P IDC UT | I.28 |
| 1766800000 | SAI-8-M 4P IDC | I.28 |
| 1766801000 | SAI-8-M 4P IDC UT | I.28 |

| Order No. | Type | Page |
|---|---|---|
| 1766810000 | SAI-SA-4-IDC | I.26 |
| 1767880000 | SAI-8-M 5P M12 ZF III | I.7 |

## 1770000000

| | | |
|---|---|---|
| 1777730000 | VP M16-MS65 | C.81 |
| 1779080001 | SFC 1/21 NEUTRAL WS | K.14 |
| 1779080002 | SFC 1/21 NEUTRAL BL | K.14 |
| 1779080003 | SFC 1/21 NEUTRAL RT | K.14 |
| 1779080004 | SFC 1/21 NEUTRAL GE | K.14 |

## 1780000000

| | | |
|---|---|---|
| 1781060000 | SAI-8-M 5P M12 NPN | I.7 |
| 1781520000 | SAI-SK Stecker M12 | D.31 |
| 1781520000 | SAI-SK Stecker M12 | F.10 |
| 1781540001 | SAIB-4-IDC-M12 small | D.24 |
| 1781550001 | SAIS-4-IDC M12 small | D.24 |
| 1782740000 | SAI-8-MMH 5P M12 ZF | I.35 |
| 1782750000 | SAI-4/6/8 MH MH BLZF3,5 | I.36 |
| 1782760000 | SAI-8-MH-5P M12 ZF III | I.36 |
| 1783410000 | SAI-Y-5S B2-4 2M12 | D.28 |
| 1783420000 | SAI-Y-4-4/2-4 M12/8 | D.28 |
| 1783430000 | SAI-Y-5S PARA 2M12 | D.28 |
| 1783430000 | SAI-Y-5S PARA 2M12 | H.7 |
| 1783460000 | SAI-4/6/8-MH LEER | I.7 |
| 1783490000 | SAI-8-MM 5P M12 | I.35 |
| 1783491000 | SAI-8-MM 5P M12 UT | I.35 |
| 1783500000 | SAI-4-MM 5P M12 | I.35 |
| 1783510000 | SAI-8-MMS 5P M12 | I.35 |
| 1783520000 | SAI-4-MMS 5P M12 | I.35 |
| 1783530000 | SAI-8-MMS 4P M12 | I.35 |
| 1783540000 | SAI-4-MMS 4P M12 | I.35 |
| 1784030001 | SAIB-3-IDC-M8 small | D.26 |
| 1784040001 | SAIS-3-IDC M8 small | D.26 |
| 1784050001 | SAIB-4-IDC-M8 small | D.26 |
| 1784060001 | SAIS-4-IDC M8 small | D.26 |
| 1784500000 | SAI-8-F 5P 20M 0.5/1.0U | I.8 |
| 1784510000 | SAI-8-F 5P 15M 0.5/1.0U | I.8 |
| 1784570000 | SAI-8-F 4P M8 PUR 10M | I.50 |
| 1784580000 | SAI-8-F 4P M8 PUR 5M | I.50 |
| 1784590000 | SAI-4-F 4P M8 PUR 10M | I.50 |
| 1784600000 | SAI-4-F 4P M8 PUR 5M | I.50 |
| 1784610000 | SAI-8-F 3P M8 PUR 10M | I.50 |
| 1784620000 | SAI-8-F 3P M8 PUR 5M | I.50 |
| 1784630000 | SAI-4-F 3P M8 PUR 10M | I.50 |
| 1784640000 | SAI-4-F 3P M8 PUR 5M | I.50 |
| 1784650000 | SAI-8-M23 4P M8 | I.51 |
| 1784650000 | SAI-8-M23 4P M8 | J.33 |
| 1784660000 | SAI-4-M23 4P M8 | I.51 |
| 1784660000 | SAI-4-M23 4P M8 | J.33 |
| 1784670000 | SAI-8-M 3P M8 | I.50 |
| 1784680000 | SAI-4-M 3P M8 | I.50 |
| 1784690000 | SAI-8-M 4P M8 | I.50 |
| 1784700000 | SAI-4-M 4P M8 | I.50 |
| 1784740000 | SAIS-M-5/8S M12 5P A-COD | C.32 |
| 1784740000 | SAIS-M-5/8S M12 5P A-COD | D.15 |
| 1784740002 | SAIBM-4/8S-M12 4P A-ZF | D.5 |
| 1784750000 | SAIB-M-5/8S M12 5P A-COD | C.32 |
| 1784750000 | SAIB-M-5/8S M12 5P A-COD | D.15 |
| 1784760000 | SAIEND CAN-M12 5P A-COD | F.14 |
| 1784770000 | SAIEND PB M12 5P B-COD | F.10 |
| 1784780000 | SAIBM 5/8S M12 5P B-COD | C.12 |
| 1784780000 | SAIBM 5/8S M12 5P B-COD | D.16 |
| 1784790000 | SAISM 5/8S M12 5P B-COD | C.12 |
| 1784790000 | SAISM 5/8S M12 5P B-COD | D.16 |
| 1785100100 | FBC PA M12 M-FM 1M | C.29 |
| 1785110100 | FBC PA M12 FM 1M | C.28 |
| 1785120100 | FBC PA M12 M 1M | C.28 |
| 1785130100 | FBCEX PA M12 M-FM 1M | C.29 |
| 1785140100 | FBCEX PA M12 FM 1M | C.28 |
| 1785150100 | FBCEX PA M12 M 1M | C.28 |
| 1789190000 | SAI-8-MF 4P PUR 10M M12 | I.44 |

## 1790000000

| | | |
|---|---|---|
| 1791450400 | SAI-4/6/8-MHF 4P PUR 4M | I.44 |
| 1791450600 | SAI-4/6/8-MHF 4P PUR 6M | I.44 |
| 1791450900 | SAI-4/6/8-MHF 4P PUR 9M | I.44 |
| 1791451400 | SAI-4/6/8-MHF 4P PUR14M | I.44 |
| 1791452000 | SAI-4/6/8-MHF 4P PUR20M | I.44 |
| 1791452800 | SAI-4/6/8-MHF 4P PUR28M | I.44 |
| 1791453400 | SAI-4/6/8-MHF 4P PUR34M | I.44 |
| 1791460400 | SAI-4/6/8-MHF 5P PUR 4M | I.44 |
| 1791460600 | SAI-4/6/8-MHF 5P PUR 6M | I.44 |
| 1791460900 | SAI-4/6/8-MHF 5P PUR 9M | I.44 |
| 1791461400 | SAI-4/6/8-MHF 5P PUR14M | I.44 |
| 1791461600 | SAI-4/6/8-MHF 5P PUR16M | I.44 |
| 1791462000 | SAI-4/6/8-MHF 5P PUR20M | I.44 |
| 1791462800 | SAI-4/6/8-MHF 5P PUR28M | I.44 |
| 1791463400 | SAI-4/6/8-MHF 5P PUR34M | I.44 |
| 1791464000 | SAI-4/6/8-MHF 5P PUR40M | I.44 |
| 1791465000 | SAI-4/6/8-MHF 5P PUR50M | I.44 |
| 1791465500 | SAI-4/6/8-MHF 5P PUR55M | I.44 |
| 1794850000 | SAI-SK-M12 IDC | D.31 |
| 1794850000 | SAI-SK-M12 IDC | I.27 |
| 1795020000 | SAI-IDC-TOOL | I.27 |
| 1795470000 | SAI-8-S 5P M12 | I.12 |
| 1795500000 | POS-5P M12 M20 300mm | C.33 |

| Order No. | Type | Page |
|---|---|---|
| 1795900000 | SAI-8-M16 3P M8 | I.51 |
| 1798480000 | TM 203/18 V0 | K.15 |
| 1799960000 | SAI-8-MF 4P PUR 5M M12 | I.44 |

## 1800000000

| | | |
|---|---|---|
| 1800000000 | SAI-4-M 5P M12 0L | I.7 |
| 1802750000 | SAI-SK M12 MT | D.31 |
| 1802760000 | SAI-SK M8 | C.59 |
| 1802760000 | SAI-SK M8 | D.31 |
| 1802760000 | SAI-SK M8 | F.10 |
| 1803850000 | SAIS-M8-4P | D.20 |
| 1803860000 | SAIS-M8-3P | D.20 |
| 1803870000 | SAIB-M8-3P | D.20 |
| 1803880000 | SAIB-M8-4P | D.20 |
| 1803910000 | SAIBW-M-4/8 M12 | C.32 |
| 1803910000 | SAIBW-M-4/8 M12 | D.15 |
| 1803920000 | SAIBW-M-5/8 M12 | C.32 |
| 1803920000 | SAIBW-M-5/8 M12 | D.15 |
| 1803930000 | SAISW-M-4/8 M12 | C.32 |
| 1803930000 | SAISW-M-4/8 M12 | D.15 |
| 1803930001 | SAISW-4/8S-M12 4P D-ZF | D.18 |
| 1803940000 | SAISW-M-5/8 M12 | C.32 |
| 1803940000 | SAISW-M-5/8 M12 | D.15 |
| 1804580000 | SAI-4-MF 5P PUR 10M | I.44 |
| 1804590000 | SAI-8-MF 5P PUR 5M | I.44 |
| 1804600000 | SAI-4-MF 5P PUR 5M | I.44 |
| 1805660000 | SAI Y-4S M8-M8 | D.28 |
| 1805720000 | SFC 1/30 NEUTRAL BL | K.14 |
| 1805730000 | SFC 1/30 NEUTRAL GE | K.14 |
| 1805740000 | SFC 1/30 NEUTRAL RT | K.14 |
| 1805760000 | SFC 1/30 NEUTRAL WS | K.14 |
| 1805770000 | SFC 2/21 NEUTRAL BL | K.14 |
| 1805780000 | SFC 2/21 NEUTRAL GE | K.14 |
| 1805790000 | SFC 2/21 NEUTRAL RT | K.14 |
| 1805810000 | SFC 2/21 NEUTRAL WS | K.14 |
| 1805820000 | SFC 2/30 NEUTRAL BL | K.14 |
| 1805830000 | SFC 2/30 NEUTRAL GE | K.14 |
| 1805850000 | SFC 2/30 NEUTRAL RT | K.14 |
| 1805870000 | SFC 2/30 NEUTRAL WS | K.14 |
| 1806010000 | SAI-4-M 5P M12 1:1 | I.38 |
| 1806011000 | SAI-4-M 5P M12 M1:1 UT | I.38 |
| 1807230000 | SAIB-4/9 | D.7 |
| 1807240000 | SAIBW-4/9 | D.7 |
| 1807250000 | SAIB-5/9 | D.8 |
| 1807330000 | SAIBW-5/9 | D.8 |
| 1807340000 | SAIS-4/9 | D.7 |
| 1807350000 | SAIS-5/9 | D.8 |
| 1807360000 | SAISW-4/9 | D.7 |
| 1807370000 | SAISW- 5/9 | D.8 |
| 1807640000 | SAI-4-M 8P M12 | I.39 |
| 1807641000 | SAI-4-M 8P M12 UT | I.39 |
| 1808830000 | SAISW-4/9-7/8" | E.6 |
| 1808840000 | SAIS-4/9-7/8" | E.6 |
| 1808970150 | SAIL-M12BW-4S1.5U | B.17 |

## 1810000000

| | | |
|---|---|---|
| 1812170000 | SAI-8-B 4P M12 F10 | I.43 |
| 1812470000 | SAIBW-4/9-7/8" | E.6 |
| 1812480000 | SAIB-4/9-7/8" | E.6 |
| 1812540150 | SAIL-M12BG-4S1.5U | B.17 |
| 1812550150 | SAIL-ZW-M12BG-2/4-1.5U | B.38 |
| 1812870000 | SAISW-4-IDC M12 | D.24 |
| 1812890000 | SAIBW-4-IDC M12 | D.24 |
| 1813130000 | SFC 0/12 NEUTRAL WS | K.14 |
| 1813150000 | SFC 0/12 NEUTRAL RT | K.14 |
| 1813160000 | SFC 0/12 NEUTRAL GE | K.14 |
| 1813170000 | SFC 0/12 NEUTRAL BL | K.14 |
| 1813190000 | SFC 0/21 NEUTRAL WS | K.14 |
| 1813200000 | SFC 0/21 NEUTRAL RT | K.14 |
| 1813210000 | SFC 0/21 NEUTRAL GE | K.14 |
| 1813220000 | SFC 0/21 NEUTRAL BL | K.14 |
| 1813240000 | SFC 0/30 NEUTRAL WS | K.14 |
| 1813250000 | SFC 0/30 NEUTRAL RT | K.14 |
| 1813260000 | SFC 0/30 NEUTRAL GE | K.14 |
| 1813270000 | SFC 0/30 NEUTRAL BL | K.14 |
| 1814890000 | SAIE-M12B-5-0.5U-PG9 | D.35 |
| 1814990000 | SAI-8-F 5P NPN-PNP 5M | I.40 |
| 1815670000 | SAIL-M12WM12W-3-X.XU | B.7 |
| 1815670150 | SAIL-M12WM12G-3-X.XU | B.25 |
| 1815670300 | SAIB-3/7 | B.7 |
| 1815670500 | SAIL-M12GM12G-3-X.XV | B.7 |
| 1815671000 | SAIL-M12GM12G-4-X.XV | B.7 |
| 1816610000 | SAIL-M12GM12G-5-X.XV | I.7 |
| 1818090100 | SAIL-M12GM12W-3-X.XV | J.30 |
| 1818140100 | SAIL-M12GM12W-4-X.XV | J.30 |
| 1818160100 | SAIS-M23-19P-ST-1,0M | J.30 |
| 1818180100 | SAIB-M23-19P-ST-1,0M | J.30 |
| 1819450000 | SAI-WDF 5P M12 60mm | D.30 |

## 1820000000

| | | |
|---|---|---|
| 1820690000 | SAI-WDF 5P B M12 60mm | D.30 |
| 1821050000 | SAIL-M12WM12G-3-X.XU | B.6 |
| 1821050150 | SAIL-M12WM12G-3-1.5U | B.6 |
| 1821050300 | SAIL-M12WM12G-3-3.0U | B.6 |
| 1821050500 | SAIL-M12WM12G-3-5.0U | B.6 |
| 1821051000 | SAIL-M12WM12G-3-10U | B.6 |

| Order No. | Type | Page |
|---|---|---|
| 1824570000 | SAIL-M8GM8G-3-X.XU | B.4 |
| 1824570150 | SAIL-M8GM8G-3-1.5U | B.32 |
| 1824570300 | SAIL-M8GM8G-3-3.0U | B.4 |
| 1824570500 | SAIL-M8GM8G-3-5.0U | B.4 |
| 1824571000 | SAIL-M8GM8G-3-10U | B.4 |
| 1824580000 | SAIL-M8GM8W-3-X.XU | B.5 |
| 1824580150 | SAIL-M8GM8W-3-1.5U | B.32 |
| 1824580300 | SAIL-M8GM8W-3-3.0U | B.5 |
| 1824580500 | SAIL-M8GM8W-3-5.0U | B.5 |
| 1824581000 | SAIL-M8GM8W-3-10U | B.5 |
| 1824590000 | SAIL-M8G-3-X.XU | B.4 |
| 1824590150 | SAIL-M8G-3-1.5U | B.19 |
| 1824590300 | SAIL-M8G-3-3.0U | B.4 |
| 1824590500 | SAIL-M8G-3-5.0U | B.4 |
| 1824591000 | SAIL-M8G-3-10U | B.4 |
| 1826880000 | SAI-Y-5S- M12/M12 | D.28 |
| 1827010150 | SAIL-M8BWR-3-1.5U | B.20 |
| 1827020150 | SAIL-M8BGR-3-1.5U | B.20 |
| 1828610000 | SAI-8-F 4P M8 L 10M | I.54 |
| 1828620000 | SAI-8-F 4P M8 L 5M | I.54 |
| 1828630000 | SAI-12-F 3P M8 L 10M | I.54 |
| 1828640000 | SAI-12-F 3P M8 L 5M | I.54 |
| 1828650000 | SAI-10-F 3P M8 L 10M | I.54 |
| 1828660000 | SAI-10-F 3P M8 L 5M | I.54 |
| 1828670000 | SAI-8-F 3P M8 L 10M | I.54 |
| 1828680000 | SAI-8-F 3P M8 L 5M | I.54 |
| 1828690000 | SAI-6-F 3P M8 L 10M | I.54 |
| 1828700000 | SAI-6-F 3P M8 L 5M | I.54 |
| 1828710000 | SAI-4-F 3P M8 L 10M | I.54 |
| 1828720000 | SAI-4-F 3P M8 L 5M | I.54 |
| 1828730000 | SAI-6-S 3P M8 L | I.52 |
| 1828740000 | SAI-4-S 3P M8 L | I.52 |

## 1830000000

| | | |
|---|---|---|
| 1831020000 | SAI-8-M16 4P M12 | I.13 |
| 1836910000 | SAIE-M12B-5-0.5U-M16 | D.33 |
| 1836960000 | SAIB-8/9 | D.8 |
| 1836970000 | SAIS-8/9 | D.8 |
| 1837560000 | SAIS-ZWW | D.30 |

## 1840000000

| | | |
|---|---|---|
| 1845120150 | SAIL-VSA-1.5U(0.5) | B.51 |
| 1845140150 | SAIL-VSB-1.5U(0.5) | B.52 |
| 1845160150 | SAIL-VSBD-1.5U(0.5) | B.52 |
| 1845800000 | SAI-4-F 4P M5 L10M | I.58 |
| 1845810000 | SAI-8-F 4P M5 L10M | I.58 |
| 1845820000 | SAI-4-F 3P M5 L10M | I.58 |
| 1845830000 | SAI-8-F 3P M5 L10M | I.58 |
| 1845840000 | SAI-4-S 4P M5 | I.58 |
| 1845850000 | SAI-8-S 3P M5 | I.58 |
| 1845860000 | SAI-8-S16/19P 4P M5 | I.59 |
| 1845870000 | SAI-4-S16 4P M5 | I.59 |
| 1845880000 | SAI-8-S16 3P M5 | I.59 |
| 1845890000 | SAI-4-S16 3P M5 | I.59 |
| 1847560000 | SAI-8-B 5P M12 SL | I.41 |
| 1847920000 | SAI-8-S 4P FC | I.20 |
| 1847920000 | SAI-8-S 4P FC | J.31 |
| 1847930000 | SAI-4-F 5P FC 10M | I.19 |
| 1847940000 | SAI-4-F 5P FC 2M | I.19 |
| 1847950000 | SAI-4-F 5P FC 5M | I.19 |
| 1847960000 | SAI-4-S 4P FC | I.20 |
| 1847960000 | SAI-4-S 4P FC | J.31 |
| 1847970000 | SAI-4-S 5P FC | I.20 |
| 1847970000 | SAI-4-S 5P FC | J.31 |
| 1847980000 | SAI-8-F 4P FC 10M | I.19 |
| 1847990000 | SAI-8-F 4P FC 2M | I.19 |
| 1848000000 | SAI-8-F 4P FC 5M | I.19 |
| 1848010000 | SAI-8-F 5P FC 10M | I.19 |
| 1848020000 | SAI-8-F 5P FC 2M | I.19 |
| 1848030000 | SAI-8-F 5P FC 5M | I.19 |
| 1848040000 | SAI-8-S 5P FC | I.20 |
| 1848040000 | SAI-8-S 5P FC | J.31 |
| 1848050000 | SAI-4-F 4P FC 10M | I.19 |
| 1848060000 | SAI-4-F 4P FC 5M | I.19 |
| 1848070000 | SAI-8-M 5P FC | I.22 |
| 1848080000 | SAI-4-F 4P FC 2M | I.19 |
| 1849670000 | SAI-6-F 4P M8 L 10M | I.54 |
| 1849680000 | SAI-4-F 4P M8 L 5M | I.54 |
| 1849690000 | SAI-4-F 4P M8 L 10M | I.54 |
| 1849700000 | SAI-6-F 4P M8 L 5M | I.54 |

## 1850000000

| | | |
|---|---|---|
| 1851740000 | SAI-4-F 3P M5 L5M | I.58 |
| 1851750000 | SAI-8-F 4P M5 L5M | I.58 |
| 1851760000 | SAI-8-F 3P M5 L5M | I.58 |
| 1851770000 | SAI-4-F 4P M5 L5M | I.58 |
| 1852720000 | SAIS-3-IDC (0,75) M12 | D.25 |
| 1852730000 | SAIB-3-IDC (0,75) M12 | D.25 |
| 1852740000 | SAIS-4-IDC (0,75) M12 | D.25 |
| 1852750000 | SAIB-4-IDC (0,75) M12 | D.25 |
| 1854000000 | SAI-4-M 5P M12 ZF | I.7 |
| 1854060150 | SAIL-M5G-3P-1.5U | B.23 |
| 1855310000 | SAI-SK M5 | D.31 |
| 1856110000 | SAIE-M12B-5-0.5U-FP-M16 | D.33 |
| 1856120000 | SAIE-M12S-5-0.5U-PG9 | D.35 |
| 1856130000 | SAIE-M8B-3-0.5U-FP-M8 | D.36 |

| Order No. | Type | Page |
|---|---|---|
| 1856140000 | SAIE-M8B-4-0.5U-FP-M8 | D.36 |
| 1857550000 | SAIL-M8W-3-X.XU | B.4 |
| 1857550150 | SAIL-M8W-3-1.5U | B.19 |
| 1857550300 | SAIL-M8W-3-3.0U | B.4 |
| 1857550500 | SAIL-M8W-3-5.0U | B.4 |
| 1857551000 | SAIL-M8W-3-10U | B.4 |
| 1857560000 | SAIL-M8W-4-X.XU | B.4 |
| 1857560150 | SAIL-M8W-4-1.5U | B.19 |
| 1857560300 | SAIL-M8W-4-3.0U | B.4 |
| 1857560500 | SAIL-M8W-4-5.0U | B.4 |
| 1857561000 | SAIL-M8W-4-10U | B.4 |
| 1857660000 | SAIL-M8GM8W-4-X.XU | B.5 |
| 1857660150 | SAIL-M8GM8W-4-1.5U | B.32 |
| 1857660300 | SAIL-M8GM8W-4-3.0U | B.5 |
| 1857660500 | SAIL-M8GM8W-4-5.0U | B.5 |
| 1857661000 | SAIL-M8GM8W-4-10U | B.5 |
| 1857670000 | SAIL-M8WM8W-3-X.XU | B.5 |
| 1857670150 | SAIL-M8WM8W-3-1.5U | B.32 |
| 1857670300 | SAIL-M8WM8W-3-3.0U | B.5 |
| 1857670500 | SAIL-M8WM8W-3-5.0U | B.5 |
| 1857671000 | SAIL-M8WM8W-3-10U | B.5 |
| 1857680000 | SAIL-M8WM8W-4-X.XU | B.5 |
| 1857680150 | SAIL-M8WM8W-4-1.5U | B.32 |
| 1857680300 | SAIL-M8WM8W-4-3.0U | B.5 |
| 1857680500 | SAIL-M8WM8W-4-5.0U | B.5 |
| 1857681000 | SAIL-M8WM8W-4-10U | B.5 |
| 1857690150 | SAIL-VSA-M12W-1.5U | B.47 |
| 1857700150 | SAIL-VSB-M12W-1.5U | B.48 |
| 1857710150 | SAIL-VSBD-M12W-1.5U | B.48 |
| 1857720150 | SAIL-VSC-M12W-1.5U | B.49 |
| 1857730150 | SAIL-VSCD-M12W-1.5U | B.49 |
| 1859110000 | SAI-4-SH 4P FC | I.21 |
| 1859110000 | SAI-4-SH 4P FC | J.32 |
| 1859120000 | SAI-8-SH 4P FC | I.21 |
| 1859120000 | SAI-8-SH 4P FC | J.32 |
| 1859130000 | SAI-4-SH 5P FC | I.21 |
| 1859130000 | SAI-4-SH 5P FC | J.32 |
| 1859140000 | SAI-8-SH 5P FC | I.21 |
| 1859140000 | SAI-8-SH 5P FC | J.32 |

## 1860000000

| | | |
|---|---|---|
| 1861090000 | SAIE-M12S-4-0.5U-M16 | D.33 |
| 1861110000 | SAIE-M12S-8-0.5U-M16 | D.33 |
| 1861120000 | SAIE-M12B-4-0.5U-M16 | D.33 |
| 1861140000 | SAIE-M12B-8-0,5U-M16 | D.33 |
| 1861160000 | SAIE-M12S-4-0.5U-FP-M16 | D.33 |
| 1861170000 | SAIE-M12S-5-0.5U-FP-M16 | D.33 |
| 1861180000 | SAIE-M12S-8-0.5U-FP-M16 | D.33 |
| 1861190000 | SAIE-M12B-4-0.5U-FP-M16 | D.33 |
| 1861210000 | SAIE-M12B-8-0.5U-FP-M16 | D.33 |
| 1861220000 | SAIE-M12S-4-0.5U-PG9 | D.35 |
| 1861220001 | SAIE-M12S-4-0.5U-AEH-VA | C.33 |
| 1861230000 | SAIE-M12S-5-0.5U-M16 | D.33 |
| 1861240000 | SAIE-M12S-8-0.5U-PG9 | D.35 |
| 1861250000 | SAIE-M12B-4-0.5U-PG9 | D.35 |
| 1861270000 | SAIE-M12B-8-0.5U-PG9 | D.35 |
| 1861280000 | SAIE-M8R-3-0.5U-FP-M8 | D.35 |
| 1861290000 | SAIE-M8R-4-0.5U-FP-M8 | D.35 |
| 1861540000 | SAI-4-S 5P CNOMO | I.23 |
| 1861550000 | SAI-8-F 5P CNOMO 5M | I.23 |
| 1861560000 | SAI-4-F 5P CNOMO 10M | I.23 |
| 1861570000 | SAI-4-F 5P CNOMO 5M | I.23 |
| 1861580000 | SAI-8-S 5P CNOMO | I.23 |
| 1861590000 | SAI-8-F 5P CNOMO 10M | I.23 |
| 1862200000 | WK-1/4"(Screwty) | K.5 |
| 1864730000 | SAIS-3-IDC-M12B-COD | C.13 |
| 1864730000 | SAIS-3-IDC-M12B-COD | D.16 |
| 1864740000 | SAIB-3-IDC-M12B-COD | C.13 |
| 1864740000 | SAIB-3-IDC-M12B-COD | D.16 |
| 1865310000 | SAI-8-F 5P M12 5M VA | I.30 |
| 1865870150 | SAIL-M12BG-8-1.5U | B.14 |
| 1867410150 | SAIL-M12BG-3S1.5U | B.17 |
| 1868350000 | SAI-4-M 4P Exi Z1 0L | I.61 |
| 1868360000 | SAI-4-M 4P Exi Z1 IL | I.61 |
| 1868370000 | SAI-8-M 4P Exi Z1 IL | I.61 |
| 1868560000 | DAE M12 PA short | C.81 |

## 1870000000

| | | |
|---|---|---|
| 1871680000 | SAI-8-S12 3P M8 L | I.52 |
| 1871700150 | SAIL-M5G-4P-1.5U | B.23 |
| 1872440000 | SAI-8-SHB 5P FC | I.24 |
| 1872460000 | SAI-8-SHB 5P F13 FC | I.25 |
| 1873030000 | SAIE-M5S-4-0.2U | D.36 |
| 1873040000 | SAIE-M5B-4-0.2U | D.36 |
| 1873050000 | SAIE-M5S-3-0.2U | D.36 |
| 1873060000 | SAIE-M5B-3-0.2U | D.36 |
| 1873070000 | SAIB-VSA-3P/250/9-0B | D.40 |
| 1873080000 | SAIB-VSA-4P/250/9-0B | D.40 |
| 1873090000 | SAIB-VSA-3P/250/11-0B | D.40 |
| 1873100000 | SAIB-VSA-4P/250/11-0B | D.40 |
| 1873110000 | SAIB-VSA-3P/230/9/LD | D.40 |
| 1873120000 | SAIB-VSA-3P/24/9/LD | D.40 |
| 1873130000 | SAIB-VSA-3P/230/9-H/0B | D.40 |
| 1873140000 | SAIB-VSA-4P/230/9-H/0B | D.40 |
| 1873150000 | SAIB-VSA-3P/230/11-H/0B | D.40 |
| 1873160000 | SAIB-VSA-4P/230/11-H/0B | D.40 |
| 1873170000 | SAIB-VSB-3P/250/9-0B | D.40 |

| Order No. | Type | Page |
|---|---|---|
| 1873180000 | SAIB-VSB-3P/24/9/LD | D.40 |
| 1873190000 | SAIB-VSBD-3P/250/9-0B | D.40 |
| 1873200000 | SAIB-VSC-3P/250/7-0B | D.40 |
| 1873210000 | SAIB-VSC-4P/250/7-0B | D.40 |
| 1873220000 | SAIB-VSCD-3P/250/7-0B | D.40 |
| 1873230000 | SAIB-VSCD-4P/250/7-0B | D.40 |
| 1873240150 | SAIL-M5W-4P-1.5U | B.23 |
| 1873250150 | SAIL-M5BG-4P-1.5U | B.23 |
| 1873260150 | SAIL-M5BW-3P-1.5U | B.23 |
| 1873270150 | SAIL-M5BW-4P-1.5U | B.23 |
| 1873280150 | SAIL-M5W-3P-1.5U | B.23 |
| 1873290150 | SAIL-M5BG-3P-1.5U | B.23 |
| 1873300150 | SAIL-M12G-PB-1.5D | C.6 |
| 1873310150 | SAIL-M12GM12G-PB-1.5D | C.7 |
| 1873320150 | SAIL-M12BG-PB-1.5D | C.6 |
| 1877250000 | SAIL-M8GM8W-3LX.XU | B.5 |
| 1877250150 | SAIL-M8GM8W-3L1.5U | B.34 |
| 1877250300 | SAIL-M8GM8W-3L3.0U | B.5 |
| 1877250500 | SAIL-M8GM8W-3L5.0U | B.5 |
| 1877251000 | SAIL-M8GM8W-3L10U | B.5 |
| 1877440100 | SAIB-M23-12P-AN-1,0M | J.30 |
| 1877950000 | SAI-10-S12 3P M8 L | I.52 |
| 1879710150 | SAIL-M12BG-12-1.5U | B.14 |

## 1880000000

| Order No. | Type | Page |
|---|---|---|
| 1880470000 | SAIL-M8GM8G-4-X.XU | B.5 |
| 1880470150 | SAIL-M8GM8G-4-1.5U | B.32 |
| 1880470300 | SAIL-M8GM8G-4-3.0U | B.5 |
| 1880470500 | SAIL-M8GM8G-4-5.0U | B.5 |
| 1880471000 | SAIL-M8GM8G-4-10U | B.5 |
| 1881710000 | SAI-Y-5S M12/M12 2Bo | D.30 |
| 1883460150 | SAIL-M12BW-8-1.5U | B.14 |
| 1886440100 | SAIB-M23-12P-ST-1,0M | J.30 |

## 1890000000

| Order No. | Type | Page |
|---|---|---|
| 1890000000 | SAI-AU M12 PB AI/AO/DI | F.9 |
| 1890010000 | SAI-AU M12 PB 16DI/8DO | F.8 |
| 1890020000 | SAI-AU M12 PB 16DI | F.8 |
| 1890520150 | SAIL-M12BG-8S1.5U | B.15 |
| 1892080000 | SAI-8-M 5P M12 ECO | I.17 |
| 1892080005 | SAI-8-M 5P M12 NPN ECO | I.17 |
| 1892081000 | SAI-8-M 5P M12 ECO UT | I.17 |
| 1892090000 | SAI-6-M 5P M12 ECO | I.17 |
| 1892091000 | SAI-6-M 5P M12 ECO UT | I.17 |
| 1892100000 | SAI-4-M 5P M12 ECO | I.17 |
| 1892100005 | SAI-4-M 5P M12 NPN ECO | I.17 |
| 1892101000 | SAI-4-M 5P M12 ECO UT | I.17 |
| 1892120000 | SAISM-4/8S-M12-4P D-COD | C.77 |
| 1892120000 | SAISM-4/8S-M12-4P D-COD | D.16 |
| 1892120001 | SAISM-4/8S-M12 4P D-ZF | D.18 |
| 1892130000 | SAIBM-4/8S-M12-4P D-COD | C.77 |
| 1892130000 | SAIBM-4/8S-M12-4P D-COD | D.16 |
| 1892130001 | SAIBM-4/8S-M12 4P D-ZF | D.18 |
| 1894380000 | SAI-8-M 4P Exi Z1 0L | I.61 |
| 1896050000 | SAI-4-M 5P M12 Ex ia | I.61 |
| 1896070000 | SAI-6-M 5P M12 Ex ia | I.61 |
| 1896090000 | SAI-8-M 5P M12 Ex ia | I.61 |
| 1897680000 | SAI-4-MMS 5P M12 1:1 | I.38 |
| 1898240150 | SAIL-M12BW-12-1.5U | B.14 |

## 1900000000

| Order No. | Type | Page |
|---|---|---|
| 1900000000 | Screwty- M12 | K.5 |
| 1900001000 | Screwty-M12-DM | H.7 |
| 1900001000 | Screwty-M12-DM | I.27 |
| 1900001000 | Screwty-M12-DM | K.5 |
| 1900010000 | Screwty- M8 | K.5 |
| 1900011000 | Screwty-M8-DM | K.5 |
| 1900020000 | Screwty- M12 F | K.5 |
| 1900021000 | Screwty-M12 F-DM | K.5 |
| 1900030000 | Screwty- M8 F | K.5 |
| 1900031000 | Screwty-M8 F-DM | K.5 |
| 1900100000 | Screwty M12 KO o. SD | K.5 |
| 1900110000 | Screwty M8 KO o. SD | K.5 |
| 1900120000 | Screwty M12f KO o. SD | K.5 |
| 1900130000 | Screwty M8F KO o. SD | K.5 |
| 1902110000 | SAIH-SLL-3x0,34mm²(PUR) | B.56 |
| 1902120000 | SAIH-SLL-4x0,25mm²(PUR) | B.56 |
| 1902130000 | SAIH-SLL-4x0,34mm²(PUR) | B.56 |
| 1902140000 | SAIH-SLL-3x0,25mm²(PUR) | B.56 |
| 1902160000 | SAIH-SLL-3x0,34mm²(PVC) | B.56 |
| 1902170000 | SAIH-SLL-4x0,25mm²(PVC) | B.56 |
| 1902180000 | SAIH-SLL-4x0,34mm²(PVC) | B.56 |
| 1902190000 | SAIH-SLL-3x0,25mm²(PVC) | B.56 |
| 1906260000 | SAIL-M12W-4-X.XU | B.4 |
| 1906260150 | SAIL-M12W-4-1.5U | B.11 |
| 1906260150 | SAIL-M12W-4-1.5U | B.4 |
| 1906260300 | SAIL-M12W-4-3.0U | B.4 |
| 1906260500 | SAIL-M12W-4-5.0U | B.4 |
| 1906261000 | SAIL-M12W-4-10U | B.4 |
| 1906270000 | SAIL-M8G-4-X.XU | B.4 |
| 1906270150 | SAIL-M8G-4-1.5U | B.19 |
| 1906270150 | SAIL-M8G-4-1.5U | B.4 |
| 1906270300 | SAIL-M8G-4-3.0U | B.4 |
| 1906270500 | SAIL-M8G-4-5.0U | B.4 |
| 1906271000 | SAIL-M8G-4-10U | B.4 |
| 1906280100 | SAIS-M23-12P-ST-1,0M | J.30 |
| 1906290100 | SAIS-M23-12P-AN-1,0M | J.30 |
| 1906300000 | SAIL-M12GM12G-4-X.XU | B.6 |
| 1906300030 | SAIL-M12GM12G-4-0.3U | H.7 |
| 1906300050 | SAIL-M12GM12G-4-0.5U | H.7 |
| 1906300150 | SAIL-M12GM12G-4-1.5U | B.25 |
| 1906300150 | SAIL-M12GM12G-4-1.5U | B.6 |
| 1906300150 | SAIL-M12GM12G-4-1.5U | H.7 |
| 1906300300 | SAIL-M12GM12G-4-3.0U | B.6 |
| 1906300500 | SAIL-M12GM12G-4-5.0U | B.6 |
| 1906301000 | SAIL-M12GM12G-4-10U | B.6 |
| 1906310000 | SAIL-M12WM12W-4-X.XU | B.7 |
| 1906310150 | SAIL-M12WM12W-4-1.5U | B.25 |
| 1906310150 | SAIL-M12WM12W-4-1.5U | B.7 |
| 1906310300 | SAIL-M12WM12W-4-3.0U | B.7 |
| 1906310500 | SAIL-M12WM12W-4-5.0U | B.7 |
| 1906311000 | SAIL-M12WM12W-4-10U | B.7 |
| 1906330000 | SAIL-M12WM8W-3-X.XU | B.5 |
| 1906330150 | SAIL-M12WM8W-3-1.5U | B.29 |
| 1906330150 | SAIL-M12WM8W-3-1.5U | B.5 |
| 1906330300 | SAIL-M12WM8W-3-3.0U | B.5 |
| 1906330500 | SAIL-M12WM8W-3-5.0U | B.5 |
| 1906331000 | SAIL-M12WM8W-3-10U | B.5 |
| 1906340000 | SAIL-M12WM8W-4-X.XU | B.5 |
| 1906340150 | SAIL-M12WM8W-4-1.5U | B.29 |
| 1906340150 | SAIL-M12WM8W-4-1.5U | B.5 |
| 1906340300 | SAIL-M12WM8W-4-3.0U | B.5 |
| 1906340500 | SAIL-M12WM8W-4-5.0U | B.5 |
| 1906341000 | SAIL-M12WM8W-4-10U | B.5 |
| 1906390000 | SAIS-5/7-ZF | D.19 |
| 1906390000 | SAIS-5/7-ZF | D.5 |
| 1906400150 | SAIL-M8BW-4L1.5U | B.21 |
| 1906410000 | SAIL-M12GM12W-4-2LX.XU | B.8 |
| 1906410150 | SAIL-M12GM12W-4-2L1.5U | B.27 |
| 1906410150 | SAIL-M12GM12W-4-2L1.5U | B.8 |
| 1906410300 | SAIL-M12GM12W-4-2L3.0U | B.8 |
| 1906410500 | SAIL-M12GM12W-4-2L5.0U | B.8 |
| 1906411000 | SAIL-M12GM12W-4-2L10U | B.8 |
| 1906430150 | SAIL-M12GM8W-4L1.5U | B.31 |
| 1906450150 | SAIL-M8GM8W-4L1.5U | B.34 |
| 1906470150 | SAIL-M12G-3S1.5U | B.17 |
| 1906480150 | SAIL-M12G-4S1.5U | B.17 |
| 1906500150 | SAIL-M12W-3S1.5U | B.17 |
| 1906520150 | SAIL-M12W-5S1.5U | B.17 |
| 1906540150 | SAIL-M12BW-5S1.5U | B.17 |
| 1906550000 | SAI-AU M8 PB 16DI | F.10 |
| 1906550000 | SAI-AU M8 PB 16DI | F.4 |
| 1906550000 | SAI-AU M8 PB 16DI | F.8 |
| 1906560150 | SAIL-M8G-3S1.5U | B.22 |
| 1906570150 | SAIL-M8G-4S1.5U | B.22 |
| 1906580150 | SAIL-M8W-3S1.5U | B.22 |
| 1906590150 | SAIL-M8W-4S1.5U | B.22 |
| 1906600150 | SAIL-M8BG-3S1.5U | B.22 |
| 1906610150 | SAIL-M8BG-4S1.5U | B.22 |
| 1906620150 | SAIL-M8BW-3S1.5U | B.22 |
| 1906630150 | SAIL-M8BW-4S1.5U | B.22 |
| 1906640000 | SAI-AU M8 PB 16DI/8DO | F.10 |
| 1906640000 | SAI-AU M8 PB 16DI/8DO | F.4 |
| 1906640000 | SAI-AU M8 PB 16DI/8DO | F.8 |
| 1906650000 | SAI-AU M12 CAN 16DI | F.12 |
| 1906650000 | SAI-AU M12 CAN 16DI | F.14 |
| 1906650000 | SAI-AU M12 CAN 16DI | F.4 |
| 1906660000 | SAI-AU M12 CAN 16DI/8DO | F.12 |
| 1906660000 | SAI-AU M12 CAN 16DI/8DO | F.14 |
| 1906660000 | SAI-AU M12 CAN 16DI/8DO | F.4 |
| 1906670000 | SAI-AU M12 CAN AI/AO/DI | F.13 |
| 1906670000 | SAI-AU M12 CAN AI/AO/DI | F.14 |
| 1906670000 | SAI-AU M12 CAN AI/AO/DI | F.4 |
| 1906680000 | SAI-AU M8 CAN 16DI | F.12 |
| 1906680000 | SAI-AU M8 CAN 16DI | F.14 |
| 1906680000 | SAI-AU M8 CAN 16DI | F.4 |
| 1906690000 | SAI-AU M8 CAN 16DI/8DO | F.12 |
| 1906690000 | SAI-AU M8 CAN 16DI/8DO | F.14 |
| 1906690000 | SAI-AU M8 CAN 16DI/8DO | F.4 |
| 1906700000 | SAI-AU M12 DN 16DI | F.16 |
| 1906700000 | SAI-AU M12 DN 16DI | F.18 |
| 1906700000 | SAI-AU M12 DN 16DI | F.4 |
| 1906710000 | SAI-AU M12 DN 16DI/8DO | F.16 |
| 1906710000 | SAI-AU M12 DN 16DI/8DO | F.18 |
| 1906710000 | SAI-AU M12 DN 16DI/8DO | F.4 |
| 1906720000 | SAI-AU M12 DN AI/AO/DI | F.17 |
| 1906720000 | SAI-AU M12 DN AI/AO/DI | F.18 |
| 1906720000 | SAI-AU M12 DN AI/AO/DI | F.4 |
| 1906730000 | SAI-AU M8 DN 16DI | F.16 |
| 1906730000 | SAI-AU M8 DN 16DI | F.18 |
| 1906730000 | SAI-AU M8 DN 16DI | F.4 |
| 1906740000 | SAI-AU M8 DN 16DI/8DO | F.16 |
| 1906740000 | SAI-AU M8 DN 16DI/8DO | F.18 |
| 1906740000 | SAI-AU M8 DN 16DI/8DO | F.4 |
| 1906950150 | SAIL-M12BW-3S1.5U | B.17 |
| 1909500000 | VG M16 - MS 1/EMV | C.81 |
| 1909860000 | VG M16-1/K68 | C.81 |
| 1909910000 | VG M16-1/MS68 | C.81 |

## 1910000000

| Order No. | Type | Page |
|---|---|---|
| 1910000000 | Screwty Set | K.5 |
| 1912110150 | SAIL-ZW-M12BW-3L1.5U | B.37 |
| 1912130000 | ESG 8/13.5/43.3 SAI AU | F.10 |
| 1912130000 | ESG 8/13.5/43.3 SAI AU | F.14 |
| 1912130000 | ESG 8/13.5/43.3 SAI AU | F.18 |
| 1912130000 | ESG 8/13.5/43.3 SAI AU | F.23 |
| 1912130000 | ESG 8/13.5/43.3 SAI AU | F.25 |
| 1912130000 | ESG 8/13.5/43.3 SAI AU | F.27 |
| 1912130000 | ESG 8/13.5/43.3 SAI AU | F.37 |
| 1912130000 | ESG 8/13.5/43.3 SAI AU | K.16 |
| 1915220000 | SAI JP 4P LG | H.8 |
| 1916700150 | SAIL-VSCD-M8G-3-1.5U | B.55 |
| 1917400000 | SAI-TS35 MF | I.45 |
| 1918520000 | SAI JP 5P LG | H.8 |
| 1919680000 | PB SUB-D IDC TERM PS | C.15 |

## 1920000000

| Order No. | Type | Page |
|---|---|---|
| 1920000000 | Screwty Set -DM | K.5 |
| 1920700000 | SAIS 5/9-VA | C.31 |
| 1920700000 | SAIS 5/9-VA | D.12 |
| 1920700000 | SAIS 5/9-VA | I.31 |
| 1920700001 | SAIS 5/9-VA D-COD | C.78 |
| 1920710000 | SAIB 5/9-VA | C.31 |
| 1920710000 | SAIB 5/9-VA | D.12 |
| 1920710000 | SAIB 5/9-VA | I.31 |
| 1920720000 | SAIS 5/9-VA-B-COD | C.11 |
| 1920720000 | SAIS 5/9-VA-B-COD | D.12 |
| 1920720000 | SAIS 5/9-VA-B-COD | I.31 |
| 1920730000 | SAIB 5/9-VA-B-COD | C.11 |
| 1920730000 | SAIB 5/9-VA-B-COD | D.12 |
| 1920730000 | SAIB 5/9-VA-B-COD | I.31 |
| 1920970000 | SAIBW-M8-3P(TL) | D.22 |
| 1920970000 | SAIBW-M8-3P(TL) | D.6 |
| 1920980000 | SAIBW-M8-4P(TL) | D.22 |
| 1920980000 | SAIBW-M8-4P(TL) | D.6 |
| 1920990000 | SAISW-M8-3P(TL) | D.22 |
| 1920990000 | SAISW-M8-3P(TL) | D.6 |
| 1921000000 | SAISW-M8-4P(TL) | D.22 |
| 1921000000 | SAISW-M8-4P(TL) | D.6 |
| 1921010000 | SAIBM-M8-3P(TL) | D.21 |
| 1921010000 | SAIBM-M8-3P(TL) | D.6 |
| 1921020000 | SAIBM-M8-4P(TL) | D.21 |
| 1921020000 | SAIBM-M8-4P(TL) | D.6 |
| 1921030000 | SAISM-M8-3P(TL) | D.21 |
| 1921030000 | SAISM-M8-3P(TL) | D.6 |
| 1921040000 | SAISM-M8-4P(TL) | D.21 |
| 1921040000 | SAISM-M8-4P(TL) | D.6 |
| 1921050000 | SAIS-5/7-(KV) | D.10 |
| 1921060000 | SAIS-4/7-(KV) | D.10 |
| 1921070000 | SAIB-5/7-(KV) | D.10 |
| 1921080000 | SAIB-4/7-(KV) | D.10 |
| 1924940000 | SAIB-3/7 | D.5 |
| 1021490000 | SAIS-12/9-(TL) | D.11 |
| 1924950000 | SAIS-12/9-(TL) | D.5 |
| 1924960000 | SAIB-12/9-(TL) | D.11 |
| 1924960000 | SAIB-12/9-(TL) | D.5 |
| 1924970000 | SAIB-5/7-ZF | D.19 |
| 1924970000 | SAIB-5/7-ZF | D.5 |
| 1924980000 | SAI-ASI T FFR | C.61 |
| 1925010000 | SAI-ASI T FR | C.60 |
| 1925300000 | SAIL-M12GM12G-3-X.XV | B.6 |
| 1925300150 | SAIL-M12GM12G-3-1.5V | B.25 |
| 1925300150 | SAIL-M12GM12G-3-1.5V | B.6 |
| 1925300300 | SAIL-M12GM12G-3-3.0V | B.6 |
| 1925300500 | SAIL-M12GM12G-3-5.0V | B.6 |
| 1925301000 | SAIL-M12GM12G-3-10V | B.6 |
| 1925310000 | SAIL-M12GM12G-4-X.XV | B.6 |
| 1925310150 | SAIL-M12GM12G-4-1.5V | B.25 |
| 1925310150 | SAIL-M12GM12G-4-1.5V | B.6 |
| 1925310300 | SAIL-M12GM12G-4-3.0V | B.6 |
| 1925310500 | SAIL-M12GM12G-4-5.0V | B.6 |
| 1925311000 | SAIL-M12GM12G-4-10V | B.6 |
| 1925320000 | SAIL-M12GM12G-5-X.XV | B.7 |
| 1925320150 | SAIL-M12GM12G-5-1.5V | B.25 |
| 1925320150 | SAIL-M12GM12G-5-1.5V | B.7 |
| 1925320300 | SAIL-M12GM12G-5-3.0V | B.7 |
| 1925320500 | SAIL-M12GM12G-5-5.0V | B.7 |
| 1925321000 | SAIL-M12GM12G-5-10V | B.7 |
| 1925330150 | SAIL-M12GM12G-2/4-1.5V | B.26 |
| 1925340000 | SAIL-M12GM12W-3-X.XV | B.7 |
| 1925340150 | SAIL-M12GM12W-3-1.5V | B.25 |
| 1925340150 | SAIL-M12GM12W-3-1.5V | B.7 |
| 1925340300 | SAIL-M12GM12W-3-3.0V | B.7 |
| 1925340500 | SAIL-M12GM12W-3-5.0V | B.7 |
| 1925341000 | SAIL-M12GM12W-3-10V | B.7 |
| 1925350000 | SAIL-M12GM12W-4-X.XV | B.7 |
| 1925350150 | SAIL-M12GM12W-4-1.5V | B.25 |
| 1925350150 | SAIL-M12GM12W-4-1.5V | B.7 |
| 1925350300 | SAIL-M12GM12W-4-3.0V | B.7 |
| 1925350500 | SAIL-M12GM12W-4-5.0V | B.7 |
| 1925351000 | SAIL-M12GM12W-4-10V | B.7 |
| 1925360000 | SAIL-M12GM12W-5-X.XV | B.7 |
| 1925360150 | SAIL-M12GM12W-5-1.5V | B.25 |
| 1925360150 | SAIL-M12GM12W-5-1.5V | B.7 |
| 1925360300 | SAIL-M12GM12W-5-3.0V | B.7 |
| 1925360500 | SAIL-M12GM12W-5-5.0V | B.7 |
| 1925361000 | SAIL-M12GM12W-5-10V | B.7 |
| 1925370150 | SAIL-M12GM12W-2/4-1.5V | B.26 |
| 1925380000 | SAIL-M12WM12W-3-X.XV | B.7 |
| 1925380150 | SAIL-M12WM12W-3-1.5V | B.25 |
| 1925380150 | SAIL-M12WM12W-3-1.5V | B.7 |
| 1925380300 | SAIL-M12WM12W-3-3.0V | B.7 |
| 1925380500 | SAIL-M12WM12W-3-5.0V | B.7 |
| 1925381000 | SAIL-M12WM12W-3-10V | B.7 |
| 1925390000 | SAIL-M12WM12W-4-X.XV | B.7 |
| 1925390150 | SAIL-M12WM12W-4-1.5V | B.25 |
| 1925390150 | SAIL-M12WM12W-4-1.5V | B.7 |
| 1925390300 | SAIL-M12WM12W-4-3.0V | B.7 |
| 1925390500 | SAIL-M12WM12W-4-5.0V | B.7 |
| 1925391000 | SAIL-M12WM12W-4-10V | B.7 |
| 1925400000 | SAIL-M12WM12W-5-X.XV | B.7 |
| 1925400150 | SAIL-M12WM12W-5-1.5V | B.25 |
| 1925400150 | SAIL-M12WM12W-5-1.5V | B.7 |
| 1925400300 | SAIL-M12WM12W-5-3.0V | B.7 |
| 1925400500 | SAIL-M12WM12W-5-5.0V | B.7 |
| 1925401000 | SAIL-M12WM12W-5-10V | B.7 |
| 1925410000 | SAIL-M12GM12W-3LX.XV | B.8 |
| 1925410150 | SAIL-M12GM12W-3L1.5V | B.27 |
| 1925410150 | SAIL-M12GM12W-3L1.5V | B.8 |
| 1925410300 | SAIL-M12GM12W-3L3.0V | B.8 |
| 1925410500 | SAIL-M12GM12W-3L5.0V | B.8 |
| 1925411000 | SAIL-M12GM12W-3L10V | B.8 |
| 1925420000 | SAIL-M12GM12W-4-2LX.XV | B.8 |
| 1925420150 | SAIL-M12GM12W-4-2L1.5V | B.27 |
| 1925420150 | SAIL-M12GM12W-4-2L1.5V | B.8 |
| 1925420300 | SAIL-M12GM12W-4-2L3.0V | B.8 |
| 1925420500 | SAIL-M12GM12W-4-2L5.0V | B.8 |
| 1925421000 | SAIL-M12GM12W-4-2L10V | B.8 |
| 1925430000 | SAIL-M12G-3-X.XV | B.4 |
| 1925430150 | SAIL-M12G-3-1.5V | B.11 |
| 1925430150 | SAIL-M12G-3-1.5V | B.4 |
| 1925430300 | SAIL-M12G-3-3.0V | B.4 |
| 1925430500 | SAIL-M12G-3-5.0V | B.4 |
| 1925431000 | SAIL-M12G-3-10V | B.4 |
| 1925440000 | SAIL-M12G-4-X.XV | B.4 |
| 1925440150 | SAIL-M12G-4-1.5V | B.11 |
| 1925440150 | SAIL-M12G-4-1.5V | B.4 |
| 1925440300 | SAIL-M12G-4-3.0V | B.4 |
| 1925440500 | SAIL-M12G-4-5.0V | B.4 |
| 1925441000 | SAIL-M12G-4-10V | B.4 |
| 1925450000 | SAIL-M12G-5-X.XV | B.4 |
| 1925450150 | SAIL-M12G-5-1.5V | B.11 |
| 1925450150 | SAIL-M12G-5-1.5V | B.4 |
| 1925450300 | SAIL-M12G-5-3.0V | B.4 |
| 1925450500 | SAIL-M12G-5-5.0V | B.4 |
| 1925451000 | SAIL-M12G-5-10V | B.4 |
| 1925460000 | SAIL-M12BW-3LX.XV | B.8 |
| 1925460150 | SAIL-M12BW-3L1.5V | B.16 |
| 1925460150 | SAIL-M12BW-3L1.5V | B.8 |
| 1925460300 | SAIL-M12BW-3L3.0V | B.8 |
| 1925460500 | SAIL-M12BW-3L5.0V | B.8 |
| 1925461000 | SAIL-M12BW-3L10V | B.8 |
| 1925470000 | SAIL-M12BW-4-2LX.XV | B.8 |
| 1925470150 | SAIL-M12BW-4-2L1.5V | B.16 |
| 1925470150 | SAIL-M12BW-4-2L1.5V | B.8 |
| 1925470300 | SAIL-M12BW-4-2L3.0V | B.8 |
| 1925470500 | SAIL-M12BW-4-2L5.0V | B.8 |
| 1925471000 | SAIL-M12BW-4-2L10V | B.8 |
| 1925510000 | SAIL-M12W-3-X.XV | B.4 |
| 1925510150 | SAIL-M12W-3-1.5V | B.11 |
| 1925510150 | SAIL-M12W-3-1.5V | B.4 |
| 1925510300 | SAIL-M12W-3-3.0V | B.4 |
| 1925510500 | SAIL-M12W-3-5.0V | B.4 |
| 1925511000 | SAIL-M12W-3-10V | B.4 |
| 1925520000 | SAIL-M12W-4-X.XV | B.4 |
| 1925520150 | SAIL-M12W-4-1.5V | B.11 |
| 1925520150 | SAIL-M12W-4-1.5V | B.4 |
| 1925520300 | SAIL-M12W-4-3.0V | B.4 |
| 1925520500 | SAIL-M12W-4-5.0V | B.4 |
| 1925521000 | SAIL-M12W-4-10V | B.4 |
| 1925530000 | SAIL-M12W-5-X.XV | B.4 |
| 1925530150 | SAIL-M12W-5-1.5V | B.11 |
| 1925530150 | SAIL-M12W-5-1.5V | B.4 |
| 1925530300 | SAIL-M12W-5-3.0V | B.4 |
| 1925530500 | SAIL-M12W-5-5.0V | B.4 |
| 1925531000 | SAIL-M12W-5-10V | B.4 |
| 1925570000 | SAIL-M12BG-3-X.XV | B.6 |
| 1925570150 | SAIL-M12BG-3-1.5V | B.11 |
| 1925570150 | SAIL-M12BG-3-1.5V | B.6 |
| 1925570300 | SAIL-M12BG-3-3.0V | B.6 |
| 1925570500 | SAIL-M12BG-3-5.0V | B.6 |
| 1925571000 | SAIL-M12BG-3-10V | B.6 |
| 1925580000 | SAIL-M12BG-4-X.XV | B.6 |
| 1925580150 | SAIL-M12BG-4-1.5V | B.11 |
| 1925580150 | SAIL-M12BG-4-1.5V | B.6 |
| 1925580300 | SAIL-M12BG-4-3.0V | B.6 |
| 1925580500 | SAIL-M12BG-4-5.0V | B.6 |
| 1925581000 | SAIL-M12BG-4-10V | B.6 |
| 1925590000 | SAIL-M12BG-5-X.XV | B.7 |
| 1925590150 | SAIL-M12BG-5-1.5V | B.11 |
| 1925590150 | SAIL-M12BG-5-1.5V | B.7 |
| 1925590300 | SAIL-M12BG-5-3.0V | B.7 |
| 1925590500 | SAIL-M12BG-5-5.0V | B.7 |
| 1925591000 | SAIL-M12BG-5-10V | B.7 |
| 1925630000 | SAIL-M12BW-3-X.XV | B.7 |
| 1925630150 | SAIL-M12BW-3-1.5V | B.11 |
| 1925630150 | SAIL-M12BW-3-1.5V | B.7 |
| 1925630300 | SAIL-M12BW-3-3.0V | B.7 |
| 1925630500 | SAIL-M12BW-3-5.0V | B.7 |
| 1925631000 | SAIL-M12BW-3-10V | B.7 |
| 1925640000 | SAIL-M12BW-4-X.XV | B.7 |

| Order No. | Type | Page |
|---|---|---|
| 1925640150 | SAIL-M12BW-4-1.5V | B.11 |
| 1925640150 | SAIL-M12BW-4-1.5V | B.7 |
| 1925640300 | SAIL-M12BW-4-3.0V | B.7 |
| 1925640500 | SAIL-M12BW-4-5.0V | B.7 |
| 1925641000 | SAIL-M12BW-4-10V | B.7 |
| 1925650000 | SAIL-M12BW-5-X.XV | B.7 |
| 1925650150 | SAIL-M12BW-5-1.5V | B.11 |
| 1925650150 | SAIL-M12BW-5-1.5V | B.7 |
| 1925650300 | SAIL-M12BW-5-3.0V | B.7 |
| 1925650500 | SAIL-M12BW-5-5.0V | B.7 |
| 1925651000 | SAIL-M12BW-5-10V | B.7 |
| 1925870000 | SAIBW-12/9-(TL) | D.11 |
| 1926690150 | SAIL-M12G-5S1.5U | B.17 |
| 1927150000 | SAIL-M8GM8G-3-X.XV | B.4 |
| 1927150150 | SAIL-M8GM8G-3-1.5V | B.32 |
| 1927150150 | SAIL-M8GM8G-3-1.5V | B.4 |
| 1927150300 | SAIL-M8GM8G-3-3.0V | B.4 |
| 1927150500 | SAIL-M8GM8G-3-5.0V | B.4 |
| 1927151000 | SAIL-M8GM8G-3-10V | B.4 |
| 1927160000 | SAIL-M8GM8G-4-X.XV | B.5 |
| 1927160150 | SAIL-M8GM8G-4-1.5V | B.32 |
| 1927160150 | SAIL-M8GM8G-4-1.5V | B.5 |
| 1927160300 | SAIL-M8GM8G-4-3.0V | B.5 |
| 1927160500 | SAIL-M8GM8G-4-5.0V | B.5 |
| 1927161000 | SAIL-M8GM8G-4-10V | B.5 |
| 1927170000 | SAIL-M8GM8W-3-X.XV | B.5 |
| 1927170150 | SAIL-M8GM8W-3-1.5V | B.32 |
| 1927170150 | SAIL-M8GM8W-3-1.5V | B.5 |
| 1927170300 | SAIL-M8GM8W-3-3.0V | B.5 |
| 1927170500 | SAIL-M8GM8W-3-5.0V | B.5 |
| 1927171000 | SAIL-M8GM8W-3-10V | B.5 |
| 1927180000 | SAIL-M8GM8W-4-X.XV | B.5 |
| 1927180150 | SAIL-M8GM8W-4-1.5V | B.32 |
| 1927180150 | SAIL-M8GM8W-4-1.5V | B.5 |
| 1927180300 | SAIL-M8GM8W-4-3.0V | B.5 |
| 1927180500 | SAIL-M8GM8W-4-5.0V | B.5 |
| 1927181000 | SAIL-M8GM8W-4-10V | B.5 |
| 1927190000 | SAIL-M8GM8W-3LX.XV | B.5 |
| 1927190150 | SAIL-M8GM8W-3L1.5V | B.34 |
| 1927190150 | SAIL-M8GM8W-3L1.5V | B.5 |
| 1927190300 | SAIL-M8GM8W-3L3.0V | B.5 |
| 1927190500 | SAIL-M8GM8W-3L5.0V | B.5 |
| 1927191000 | SAIL-M8GM8W-3L10V | B.5 |
| 1927200150 | SAIL-M8GM8W-4L1.5V | B.34 |
| 1927210000 | SAIL-M8WM8W-3-X.XV | B.5 |
| 1927210150 | SAIL-M8WM8W-3-1.5V | B.32 |
| 1927210150 | SAIL-M8WM8W-3-1.5V | B.5 |
| 1927210300 | SAIL-M8WM8W-3-3.0V | B.5 |
| 1927210500 | SAIL-M8WM8W-3-5.0V | B.5 |
| 1927211000 | SAIL-M8WM8W-3-10V | B.5 |
| 1927220000 | SAIL-M8WM8W-4-X.XV | B.5 |
| 1927220150 | SAIL-M8WM8W-4-1.5V | B.32 |
| 1927220150 | SAIL-M8WM8W-4-1.5V | B.5 |
| 1927220300 | SAIL-M8WM8W-4-3.0V | B.5 |
| 1927220500 | SAIL-M8WM8W-4-5.0V | B.5 |
| 1927221000 | SAIL-M8WM8W-4-10V | B.5 |
| 1927230000 | SAIL-M8G-3-X.XV | B.4 |
| 1927230150 | SAIL-M8G-3-1.5V | B.19 |
| 1927230150 | SAIL-M8G-3-1.5V | B.4 |
| 1927230300 | SAIL-M8G-3-3.0V | B.4 |
| 1927230500 | SAIL-M8G-3-5.0V | B.4 |
| 1927231000 | SAIL-M8G-3-10V | B.4 |
| 1927240000 | SAIL-M8BGS-3-X.XV | B.4 |
| 1927240150 | SAIL-M8BG-3-1.5V | B.19 |
| 1927240150 | SAIL-M8BG-3-1.5V | B.4 |
| 1927240300 | SAIL-M8BG-3-3.0V | B.4 |
| 1927240500 | SAIL-M8BG-3-5.0V | B.4 |
| 1927241000 | SAIL-M8BG-3-10V | B.4 |
| 1927250000 | SAIL-M8G-4-X.XV | B.4 |
| 1927250150 | SAIL-M8G-4-1.5V | B.19 |
| 1927250150 | SAIL-M8G-4-1.5V | B.4 |
| 1927250300 | SAIL-M8G-4-3.0V | B.4 |
| 1927250500 | SAIL-M8G-4-5.0V | B.4 |
| 1927251000 | SAIL-M8G-4-10V | B.4 |
| 1927260000 | SAIL-M8BGS-4-X.XV | B.5 |
| 1927260150 | SAIL-M8BG-4-1.5V | B.19 |
| 1927260150 | SAIL-M8BG-4-1.5V | B.5 |
| 1927260300 | SAIL-M8BG-4-3.0V | B.5 |
| 1927260500 | SAIL-M8BG-4-5.0V | B.5 |
| 1927261000 | SAIL-M8BG-4-10V | B.5 |
| 1927310000 | SAIL-M8W-3-X.XV | B.4 |
| 1927310150 | SAIL-M8W-3-1.5V | B.19 |
| 1927310150 | SAIL-M8W-3-1.5V | B.4 |
| 1927310300 | SAIL-M8W-3-3.0V | B.4 |
| 1927310500 | SAIL-M8W-3-5.0V | B.4 |
| 1927311000 | SAIL-M8W-3-10V | B.4 |
| 1927320000 | SAIL-M8BWS-3-X.XV | B.5 |
| 1927320150 | SAIL-M8BW-3-1.5V | B.19 |
| 1927320150 | SAIL-M8BW-3-1.5V | B.5 |
| 1927320300 | SAIL-M8BW-3-3.0V | B.5 |
| 1927320500 | SAIL-M8BW-3-5.0V | B.5 |
| 1927321000 | SAIL-M8BW-3-10V | B.5 |
| 1927330000 | SAIL-M8W-4-X.XV | B.4 |
| 1927330150 | SAIL-M8W-4-1.5V | B.19 |
| 1927330150 | SAIL-M8W-4-1.5V | B.4 |
| 1927330300 | SAIL-M8W-4-3.0V | B.4 |
| 1927330500 | SAIL-M8W-4-5.0V | B.4 |
| 1927331000 | SAIL-M8W-4-10V | B.4 |
| 1927340000 | SAIL-M8BWS-4-X.XV | B.5 |

| Order No. | Type | Page |
|---|---|---|
| 1927340150 | SAIL-M8BW-4-1.5V | B.19 |
| 1927340150 | SAIL-M8BW-4-1.5V | B.5 |
| 1927340300 | SAIL-M8BW-4-3.0V | B.5 |
| 1927340500 | SAIL-M8BW-4-5.0V | B.5 |
| 1927341000 | SAIL-M8BW-4-10V | B.5 |
| 1927350000 | SAIL-M8BWS-3LX.XV | B.5 |
| 1927350150 | SAIL-M8BW-3L1.5V | B.21 |
| 1927350150 | SAIL-M8BW-3L1.5V | B.5 |
| 1927350300 | SAIL-M8BW-3L3.0V | B.5 |
| 1927350500 | SAIL-M8BW-3L5.0V | B.5 |
| 1927351000 | SAIL-M8BW-3L10V | B.5 |
| 1927360150 | SAIL-M8BW-4L1.5V | B.21 |

# 1930000000

| | | |
|---|---|---|
| 1932380000 | SAI-6-S 3P M8 L 0L | I.52 |
| 1933640000 | SAII-PB-2X0.34-PVC | C.9 |
| 1934200000 | PB SUB-D ZF TERM PS | C.15 |
| 1935610000 | SAIBW-4/7-(KV) | D.10 |
| 1937950000 | SAIL-M8GM12G-3-X.XU | B.6 |
| 1937950150 | SAIL-M8GM12G-3-1.5U | B.6 |
| 1937950300 | SAIL-M8GM12G-3-3.0U | B.6 |
| 1937950500 | SAIL-M8GM12G-3-5.0U | B.6 |
| 1937951000 | SAIL-M8GM12G-3-10U | B.6 |
| 1937960000 | SAIL-M8GM12W-3-X.XU | B.7 |
| 1937960150 | SAIL-M8GM12W-3-1.5U | B.7 |
| 1937960300 | SAIL-M8GM12W-3-3.0U | B.7 |
| 1937960500 | SAIL-M8GM12W-3-5.0U | B.7 |
| 1937961000 | SAIL-M8GM12W-3-10U | B.7 |
| 1937970000 | SAIL-M8WM12W-3-X.XU | B.7 |
| 1937970150 | SAIL-M8WM12W-3-1.5U | B.7 |
| 1937970300 | SAIL-M8WM12W-3-3.0U | B.7 |
| 1937970500 | SAIL-M8WM12W-3-5.0U | B.7 |
| 1937971000 | SAIL-M8WM12W-3-10U | B.7 |
| 1937980000 | SAIL-M8GM12G-4-X.XU | B.6 |
| 1937980150 | SAIL-M8GM12G-4-1.5U | B.6 |
| 1937980300 | SAIL-M8GM12G-4-3.0U | B.6 |
| 1937980500 | SAIL-M8GM12G-4-5.0U | B.6 |
| 1937981000 | SAIL-M8GM12G-4-10U | B.6 |
| 1937990000 | SAIL-M8GM12W-4-X.XU | B.7 |
| 1937990150 | SAIL-M8GM12W-4-1.5U | B.7 |
| 1937990300 | SAIL-M8GM12W-4-3.0U | B.7 |
| 1937990500 | SAIL-M8GM12W-4-5.0U | B.7 |
| 1937991000 | SAIL-M8GM12W-4-10U | B.7 |
| 1938000000 | SAIL-M8WM12W-4-X.XU | B.7 |
| 1938000150 | SAIL-M8WM12W-4-1.5U | B.7 |
| 1938000300 | SAIL-M8WM12W-4-3.0U | B.7 |
| 1938000500 | SAIL-M8WM12W-4-5.0U | B.7 |
| 1938001000 | SAIL-M8WM12W-4-10U | B.7 |
| 1938170000 | SAIL-M12GM8G-3-X.XV | B.4 |
| 1938170150 | SAIL-M12GM8G-3-1.5V | B.29 |
| 1938170150 | SAIL-M12GM8G-3-1.5V | B.4 |
| 1938170300 | SAIL-M12GM8G-3-3.0V | B.4 |
| 1938170500 | SAIL-M12GM8G-3-5.0V | B.4 |
| 1938171000 | SAIL-M12GM8G-3-10V | B.4 |
| 1938180000 | SAIL-M12GM8W-3-X.XV | B.5 |
| 1938180150 | SAIL-M12GM8W-3-1.5V | B.29 |
| 1938180150 | SAIL-M12GM8W-3-1.5V | B.5 |
| 1938180300 | SAIL-M12GM8W-3-3.0V | B.5 |
| 1938180500 | SAIL-M12GM8W-3-5.0V | B.5 |
| 1938181000 | SAIL-M12GM8W-3-10V | B.5 |
| 1938190000 | SAIL-M12WM8W-3-X.XV | B.5 |
| 1938190150 | SAIL-M12WM8W-3-1.5V | B.29 |
| 1938190150 | SAIL-M12WM8W-3-1.5V | B.5 |
| 1938190300 | SAIL-M12WM8W-3-3.0V | B.5 |
| 1938190500 | SAIL-M12WM8W-3-5.0V | B.5 |
| 1938191000 | SAIL-M12WM8W-3-10V | B.5 |
| 1938200000 | SAIL-M12GM8G-4-X.XV | B.5 |
| 1938200150 | SAIL-M12GM8G-4-1.5V | B.29 |
| 1938200150 | SAIL-M12GM8G-4-1.5V | B.5 |
| 1938200300 | SAIL-M12GM8G-4-3.0V | B.5 |
| 1938200500 | SAIL-M12GM8G-4-5.0V | B.5 |
| 1938201000 | SAIL-M12GM8G-4-10V | B.5 |
| 1938210000 | SAIL-M12GM8W-4-X.XV | B.5 |
| 1938210150 | SAIL-M12GM8W-4-1.5V | B.29 |
| 1938210150 | SAIL-M12GM8W-4-1.5V | B.5 |
| 1938210300 | SAIL-M12GM8W-4-3.0V | B.5 |
| 1938210500 | SAIL-M12GM8W-4-5.0V | B.5 |
| 1938211000 | SAIL-M12GM8W-4-10V | B.5 |
| 1938220000 | SAIL-M12WM8W-4-X.XV | B.5 |
| 1938220150 | SAIL-M12WM8W-4-1.5V | B.29 |
| 1938220150 | SAIL-M12WM8W-4-1.5V | B.5 |
| 1938220300 | SAIL-M12WM8W-4-3.0V | B.5 |
| 1938220500 | SAIL-M12WM8W-4-5.0V | B.5 |
| 1938221000 | SAIL-M12WM8W-4-10V | B.5 |
| 1938230000 | SAIL-M8GM12G-3-X.XV | B.6 |
| 1938230150 | SAIL-M8GM12G-3-1.5V | B.6 |
| 1938230300 | SAIL-M8GM12G-3-3.0V | B.6 |
| 1938230500 | SAIL-M8GM12G-3-5.0V | B.6 |
| 1938231000 | SAIL-M8GM12G-3-10V | B.6 |
| 1938240000 | SAIL-M8GM12W-3-X.XV | B.7 |
| 1938240150 | SAIL-M8GM12W-3-1.5V | B.7 |
| 1938240300 | SAIL-M8GM12W-3-3.0V | B.7 |
| 1938240500 | SAIL-M8GM12W-3-5.0V | B.7 |
| 1938241000 | SAIL-M8GM12W-3-10V | B.7 |
| 1938250000 | SAIL-M8WM12W-3-X.XV | B.7 |
| 1938250150 | SAIL-M8WM12W-3-1.5V | B.7 |
| 1938250300 | SAIL-M8WM12W-3-3.0V | B.7 |
| 1938250500 | SAIL-M8WM12W-3-5.0V | B.7 |

| Order No. | Type | Page |
|---|---|---|
| 1938251000 | SAIL-M8WM12W-3-10V | B.7 |
| 1938260000 | SAIL-M8GM12G-4-X.XV | B.6 |
| 1938260150 | SAIL-M8GM12G-4-1.5V | B.6 |
| 1938260300 | SAIL-M8GM12G-4-3.0V | B.6 |
| 1938260500 | SAIL-M8GM12G-4-5.0V | B.6 |
| 1938261000 | SAIL-M8GM12G-4-10V | B.6 |
| 1938270000 | SAIL-M8GM12W-4-X.XV | B.7 |
| 1938270150 | SAIL-M8GM12W-4-1.5V | B.7 |
| 1938270300 | SAIL-M8GM12W-4-3.0V | B.7 |
| 1938270500 | SAIL-M8GM12W-4-5.0V | B.7 |
| 1938271000 | SAIL-M8GM12W-4-10V | B.7 |
| 1938280000 | SAIL-M8WM12W-4-X.XV | B.7 |
| 1938280150 | SAIL-M8WM12W-4-1.5V | B.7 |
| 1938280300 | SAIL-M8WM12W-4-3.0V | B.7 |
| 1938280500 | SAIL-M8WM12W-4-5.0V | B.7 |
| 1938281000 | SAIL-M8WM12W-4-10V | B.7 |
| 1938300000 | SAI-SSA-PG7 | D.42 |
| 1938550000 | SAI-AU M12 PB GW 16DI | F.22 |
| 1938550000 | SAI-AU M12 PB GW 16DI | F.23 |
| 1938550000 | SAI-AU M12 PB GW 16DI | F.4 |
| 1938570000 | SAI-AU M12 DN GW 16DI | F.24 |
| 1938570000 | SAI-AU M12 DN GW 16DI | F.25 |
| 1938570000 | SAI-AU M12 DN GW 16DI | F.4 |
| 1938600000 | SAI-AU M8 SB 8DI | F.23 |
| 1938600000 | SAI-AU M8 SB 8DI | F.25 |
| 1938600000 | SAI-AU M8 SB 8DI | F.27 |
| 1938600000 | SAI-AU M8 SB 8DI | F.28 |
| 1938600000 | SAI-AU M8 SB 8DI | F.4 |
| 1938610000 | SAI-AU M12 SB 8DI | F.23 |
| 1938610000 | SAI-AU M12 SB 8DI | F.25 |
| 1938610000 | SAI-AU M12 SB 8DI | F.27 |
| 1938610000 | SAI-AU M12 SB 8DI | F.28 |
| 1938610000 | SAI-AU M12 SB 8DI | F.4 |
| 1938630000 | SAI-AU M8 SB 8DIO | F.23 |
| 1938630000 | SAI-AU M8 SB 8DIO | F.25 |
| 1938630000 | SAI-AU M8 SB 8DIO | F.27 |
| 1938630000 | SAI-AU M8 SB 8DIO | F.28 |
| 1938630000 | SAI-AU M8 SB 8DIO | F.4 |
| 1938640000 | SAI-AU M12 SB 8DIO | F.23 |
| 1938640000 | SAI-AU M12 SB 8DIO | F.25 |
| 1938640000 | SAI-AU M12 SB 8DIO | F.27 |
| 1938640000 | SAI-AU M12 SB 8DIO | F.28 |
| 1938640000 | SAI-AU M12 SB 8DIO | F.4 |
| 1938660000 | SAI-AU M8 SB 8DO 2A | F.23 |
| 1938660000 | SAI-AU M8 SB 8DO 2A | F.25 |
| 1938660000 | SAI-AU M8 SB 8DO 2A | F.27 |
| 1938660000 | SAI-AU M8 SB 8DO 2A | F.28 |
| 1938660000 | SAI-AU M8 SB 8DO 2A | F.4 |
| 1938668000 | SAIL-M8WM12W-4-X.XV | F.4 |
| 1938680000 | SAI-AU M12 SB 8DO 2A | F.23 |
| 1938680000 | SAI-AU M12 SB 8DO 2A | F.25 |
| 1938680000 | SAI-AU M12 SB 8DO 2A | F.27 |
| 1938680000 | SAI-AU M12 SB 8DO 2A | F.28 |
| 1938690000 | SAI-AU M12 SB 4AI | F.23 |
| 1938690000 | SAI-AU M12 SB 4AI | F.25 |
| 1938690000 | SAI-AU M12 SB 4AI | F.27 |
| 1938690000 | SAI-AU M12 SB 4AI | F.29 |
| 1938690000 | SAI-AU M12 SB 4AI | F.4 |
| 1938700000 | SAI-AU M12 SB 4AO | F.23 |
| 1938700000 | SAI-AU M12 SB 4AO | F.25 |
| 1938700000 | SAI-AU M12 SB 4AO | F.27 |
| 1938700000 | SAI-AU M12 SB 4AO | F.29 |
| 1938700000 | SAI-AU M12 SB 4AO | F.4 |
| 1938710000 | SAI-AU M12 SB 4PT100 | F.23 |
| 1938710000 | SAI-AU M12 SB 4PT100 | F.25 |
| 1938710000 | SAI-AU M12 SB 4PT100 | F.27 |
| 1938710000 | SAI-AU M12 SB 4PT100 | F.32 |
| 1938710000 | SAI-AU M12 SB 4PT100 | F.4 |
| 1938720000 | SAI-AU M12 SB 4Thermo | F.23 |
| 1938720000 | SAI-AU M12 SB 4Thermo | F.25 |
| 1938720000 | SAI-AU M12 SB 4Thermo | F.27 |
| 1938720000 | SAI-AU M12 SB 4Thermo | F.31 |
| 1938720000 | SAI-AU M12 SB 4Thermo | F.4 |
| 1938730000 | SAI-AU M12 SB 2Counter | F.23 |
| 1938730000 | SAI-AU M12 SB 2Counter | F.25 |
| 1938730000 | SAI-AU M12 SB 2Counter | F.27 |
| 1938730000 | SAI-AU M12 SB 2Counter | F.30 |
| 1938730000 | SAI-AU M12 SB 2Counter | F.4 |
| 1939170000 | SAI-SCREWTY TOOL BOX | K.6 |
| 1939180000 | SAI-SCREWTY BOX | K.6 |
| 1939370150 | SAIV-M12BW-2/4-1.5U | B.13 |
| 1939410150 | SAIV-M12BG-2/4-1.5U | B.13 |

# 1940000000

| | | |
|---|---|---|
| 1944570000 | SAISW-M-5/8 M12 B-COD | C.12 |
| 1944570000 | SAISW-M-5/8 M12 B-COD | D.17 |
| 1944570000 | SAISW-M-5/8 M12 B-COD | D.5 |
| 1944580000 | SAIBW-M-5/8 M12 B-COD | C.12 |
| 1944580000 | SAIBW-M-5/8 M12 B-COD | D.17 |
| 1944580000 | SAIBW-M-5/8 M12 B-COD | D.5 |
| 1948470150 | SAIL-M8GM8GR-3-1.5U | B.33 |
| 1948480150 | SAIL-M8GM8WR-3-1.5U | B.33 |
| 1948490150 | SAIL-M8WM8WR-3-1.5U | B.33 |
| 1948500150 | SAIL-M8GM8GR-4-1.5U | B.33 |
| 1948510150 | SAIL-M8GM8WR-4-1.5U | B.33 |
| 1948520150 | SAIL-M8WM8WR-4-1.5U | B.33 |
| 1948530150 | SAIL-M8BGR-4-1.5U | B.20 |
| 1948540150 | SAIL-M8BWR-4-1.5U | B.20 |

| Order No. | Type | Page |
|---|---|---|
| 1948650150 | SAIL-M8GM8GR-3-1.5V | B.33 |
| 1948660150 | SAIL-M8GM8WR-3-1.5V | B.33 |
| 1948670150 | SAIL-M8WM8WR-3-1.5V | B.33 |
| 1948680150 | SAIL-M8GM8GR-4-1.5V | B.33 |
| 1948690150 | SAIL-M8GM8WR-4-1.5V | B.33 |
| 1948700150 | SAIL-M8WM8WR-4-1.5V | B.33 |
| 1948710150 | SAIL-M8BGR-3-1.5V | B.20 |
| 1948720150 | SAIL-M8BWR-3-1.5V | B.20 |
| 1948730150 | SAIL-M8BGR-4-1.5V | B.20 |
| 1948740150 | SAIL-M8BWR-4-1.5V | B.20 |

# 1950000000

| | | |
|---|---|---|
| 1950270000 | SAIE-EW-M20/PG9-SW24-VA | C.33 |
| 1955340000 | SAIEND CAN M8 4P | C.65 |
| 1955340000 | SAIEND CAN M8 4P | F.23 |
| 1955340000 | SAIEND CAN M8 4P | F.25 |
| 1955340000 | SAIEND CAN M8 4P | F.27 |

# 1960000000

| | | |
|---|---|---|
| 1962240000 | SAI-AU M12 USB GW 8I8O | F.26 |
| 1962240000 | SAI-AU M12 USB GW 8I8O | F.27 |
| 1962240000 | SAI-AU M12 USB GW 8I8O | F.4 |
| 1962290150 | SAIL-M12GM8W-3L1.5V | B.31 |
| 1962300150 | SAIL-M12GM8W-4L1.5V | B.31 |
| 1962610000 | SAISW-5/7-(KV) | D.10 |
| 1962620000 | SAISW-4/7-(KV) | D.10 |
| 1962630000 | SAIBW-5/7-(KV) | D.10 |
| 1962640000 | SAI-ASI-L-M8-4I V3 | C.59 |
| 1962650000 | SAI-ASI-L-M8-8I V3 | C.59 |
| 1962660000 | SAI-ASI-L-M8-4O V3 | C.59 |
| 1962670000 | SAI-ASI-L-M8-4I/4O V3 | C.59 |
| 1962680000 | SAI-ASI-L-M12-4I V3 | C.59 |
| 1962690000 | SAI-ASI-L-M12-8I V3 | C.59 |
| 1962700000 | SAI-ASI-L-M12-4O V3 | C.59 |
| 1962710000 | SAI-ASI-L-M12-4I/4O V3 | C.59 |
| 1963910150 | SAIL-M12GM12W-4-3L1.5U | B.27 |
| 1963930150 | SAIL-M12GM12W-4-3L1.5V | B.27 |
| 1963940150 | SAIL-M12BW-4-3L1.5U | B.16 |
| 1963960150 | SAIL-M12BW-4-3L1.5V | B.16 |
| 1964280150 | SAIL-ZW-M12BW-2/4-1.5U | B.38 |
| 1964290150 | SAIL-ZW-M12BW-2/4L1.5U | B.38 |
| 1964300150 | SAIL-ZW-M8BW-3-1.5U | B.39 |
| 1964310150 | SAIL-ZW-3-1.5U | B.18 |
| 1964690150 | SAIL-M12BG-CD-1.5A | C.62 |
| 1964700150 | SAIL-M12G-CD-1.5A | C.62 |
| 1964710150 | SAIL-M12GM12G-CD-1.5A | C.63 |
| 1966170000 | SAI AD 54 | G.13 |
| 1966170000 | SAI AD 54 | G.6 |
| 1966180000 | SAI BFSC M3x10 | G.13 |
| 1966190000 | SAI BP 54 KU | G.13 |
| 1966190000 | SAI BP 54 KU | G.6 |
| 1966200000 | SIBL GH SAI | G.13 |
| 1966200000 | SIBL GH SAI | G.6 |
| 1968220000 | SAI-AU M12 PB 8DI8DO 2A | F.10 |
| 1968220000 | SAI-AU M12 PB 8DI8DO 2A | F.4 |
| 1968220000 | SAI-AU M12 PB 8DI8DO 2A | F.8 |
| 1968560150 | SAIL-M12BW-3-1.5T | B.11 |
| 1968570150 | SAIL-M12BW-4-1.5T | B.11 |
| 1968580150 | SAIL-M12BG-4-1.5T | B.11 |
| 1968590150 | SAIL-M12BG-3-1.5T | B.11 |

# 1970000000

| | | |
|---|---|---|
| 1975450000 | SAI-AU M8 PB 8DI8DO 2A | F.10 |
| 1975450000 | SAI-AU M8 PB 8DI8DO 2A | F.4 |
| 1975450000 | SAI-AU M8 PB 8DI8DO 2A | F.8 |

# 1980000000

| | | |
|---|---|---|
| 1981560000 | Screwty M23 | K.5 |
| 1981900030 | SAIL-M8GM8G-4S-0.3Q-SB | C.65 |
| 1981900100 | SAIL-M8GM8G-4S-1.0Q-SB | C.65 |
| 1981900150 | SAIL-M8GM8G-4S-1.5U-SB | C.65 |
| 1981900300 | SAIL-M8GM8G-4S-3.0Q-SB | C.65 |
| 1981900500 | SAIL-M8GM8G-4S-5.0Q-SB | C.65 |
| 1981901000 | SAIL-M8GM8G-4S-10Q-SB | C.65 |
| 1981901500 | SAIL-M8GM8G-4S-15Q-SB | C.65 |
| 1981902000 | SAIL-M8GM8G-4S-20Q-SB | C.65 |
| 1981910150 | SAIL-M8BG-4S-1.5U-SB | C.65 |
| 1981910300 | SAIL-M8BG-4S-3.0Q-SB | C.65 |
| 1981910500 | SAIL-M8BG-4S-5.0Q-SB | C.65 |
| 1981911000 | SAIL-M8BG-4S-10Q-SB | C.65 |
| 1984530150 | SAIL-M12GM8GR-3-1.5U | B.30 |

# 1990000000

| | | |
|---|---|---|
| 1995800000 | SAI-M23-GS-L-7/12 | J.26 |
| 1995810000 | SAI-M23-BE-L-4/4 | J.28 |
| 1995820000 | SAI-M23-KBC-0.75/2.50 | J.29 |
| 1995820000 | SAI-M23-KBC-0.75/2.50 | K.12 |
| 1995830000 | SAI-M23-KBC-0.25/1.00 | J.29 |
| 1995830000 | SAI-M23-KBC-0.25/1.00 | K.12 |
| 1995840000 | SAI-M23-GS-7/12 | J.12 |
| 1995850000 | SAI-M23-BE-12 | J.14 |
| 1995860000 | SAI-M23-KBC-0.08/0.56 | J.16 |
| 1995860000 | SAI-M23-KBC-0.08/0.56 | K.12 |
| 1995860000 | SAI-M23-KBC-0.08/0.56 | K.13 |

| Order No. | Type | Page |
|---|---|---|
| **2320000000** | | |
| 2326170000 | B KOTR M12 5P A BU SAI | G.10 |
| 2326170000 | B KOTR M12 5P A BU SAI | G.13 |
| 2326170000 | B KOTR M12 5P A BU SAI | G.6 |
| 2326170000 | B KOTR M12 5P A BU SAI | G.9 |
| **2330000000** | | |
| 2330260000 | SAI-SK-M12-UNI | D.31 |
| 2330260000 | SAI-SK-M12-UNI | F.10 |
| 2330260000 | SAI-SK-M12-UNI | F.14 |
| 2330260000 | SAI-SK-M12-UNI | F.18 |
| 2330260000 | SAI-SK-M12-UNI | F.23 |
| 2330260000 | SAI-SK-M12-UNI | F.25 |
| 2330260000 | SAI-SK-M12-UNI | F.27 |
| 2330260000 | SAI-SK-M12-UNI | F.37 |
| 2332380000 | B KOTR M8 3P BU SAI | G.13 |
| 2332380000 | B KOTR M8 3P BU SAI | G.7 |
| **2340000000** | | |
| 2341480000 | B KOTR M12 4P D BU SAI | G.10 |
| 2341480000 | B KOTR M12 4P D BU SAI | G.13 |
| 2341480000 | B KOTR M12 4P D BU SAI | G.6 |
| 2341480000 | B KOTR M12 4P D BU SAI | G.9 |
| **2350000000** | | |
| 2350590000 | B KOTR B M12 4POL D BU | G.13 |
| 2350590000 | B KOTR B M12 4POL D BU | G.7 |
| 2350600000 | B KOTR B M12 5POL A BU | G.13 |
| 2350600000 | B KOTR B M12 5POL A BU | G.7 |
| 2350610000 | B KOTR B M12 5POL A SF | G.10 |
| 2350610000 | B KOTR B M12 5POL A SF | G.13 |
| 2350610000 | B KOTR B M12 5POL A SF | G.7 |
| 2350620000 | B KOTR B M12 5POL B BU | G.13 |
| 2350620000 | B KOTR B M12 5POL B BU | G.7 |
| 2350630000 | B KOTR B M12 5POL B SF | G.13 |
| 2350630000 | B KOTR B M12 5POL B SF | G.7 |
| 2350640000 | B KOTR BUS M8 4POL BU | G.10 |
| 2350640000 | B KOTR BUS M8 4POL BU | G.13 |
| 2350640000 | B KOTR BUS M8 4POL BU | G.7 |
| 2350640000 | B KOTR BUS M8 4POL BU | G.9 |
| 2350650000 | B KOTR BUS M8 4POL SF | G.10 |
| 2350650000 | B KOTR BUS M8 4POL SF | G.13 |
| 2350650000 | B KOTR BUS M8 4POL SF | G.9 |
| **4290000000** | | |
| 4294820000 | 1/4" Handgriff | K.5 |
| **4310000000** | | |
| 4310920000 | SAI BFSC M3x10 | G.13 |
| 4310920000 | SAI BFSC M3x10 | G.6 |
| 4311000000 | SAI O-RI 7.5X1.5 VI | G.10 |
| 4311000000 | SAI O-RI 7.5X1.5 VI | G.13 |
| 4311000000 | SAI O-RI 7.5X1.5 VI | G.6 |
| 4311000000 | SAI O-RI 7.5X1.5 VI | G.9 |
| 4311430000 | PTSC 25X12 WN5452 | G.10 |
| 4311430000 | PTSC 25X12 WN5452 | G.6 |
| 4311430000 | PTSC 25X12 WN5452 | G.9 |
| 4312340000 | SAI O-RI 5.0X0.8 NBR | G.10 |
| 4312340000 | SAI O-RI 5.0X0.8 NBR | G.13 |
| 4312340000 | SAI O-RI 5.0X0.8 NBR | G.6 |
| 4312340000 | SAI O-RI 5.0X0.8 NBR | G.9 |
| **4320000000** | | |
| 4322750000 | GWHUE BUS M12 BU SAI | G.7 |
| 4322760000 | GWHUE BUS M12 SF SAI | G.7 |
| **7910000000** | | |
| 7915030000 | SAI-8-F 5P 2M 0.5/1.0U | I.8 |
| **8390000000** | | |
| 8395500000 | PB-DP SUB-D | C.14 |
| **8420000000** | | |
| 8425910000 | POS-4P M12 PG13,5 300 mm | C.33 |
| 8425930000 | POS-4P M12 M20 150mm | C.33 |
| 8425940000 | POS-4P M12 M20 300mm | C.33 |
| 8425960000 | SAI-SK-M12 BU | D.31 |
| 8426220000 | FBCon M12 4P FM EMC | C.32 |
| 8426220000 | FBCon M12 4P FM EMC | D.15 |
| 8426220000 | FBCon M12 4P FM EMC | D.5 |
| **8460000000** | | |
| 8460860000 | PB-DP SUB-D TERM | C.15 |
| **8550000000** | | |
| 8556460000 | FBCon Term.D Ex FM | C.56 |
| **8560000000** | | |
| 8564060000 | FBCon PA CG/M12 1way | C.36 |
| 8564070000 | FBCon PA CG/M12 2way | C.37 |
| 8564080000 | FBCon PA CG/M12 4way | C.38 |
| 8564090000 | FBCon PA CG 1way | C.36 |
| 8564100000 | FBCon PA CG 2way | C.37 |
| 8564110000 | FBCon PA CG 4way | C.38 |
| 8564150000 | FBCon PA CG/M12 1way Ex | C.52 |
| 8564160000 | FBCon PA CG/M12 2way Ex | C.53 |
| 8564170000 | FBCon PA CG/M12 4way Ex | C.54 |
| 8564180000 | FBCon PA CG 1way Ex | C.52 |
| 8564190000 | FBCon PA CG 2way Ex | C.53 |
| 8564200000 | FBCon PA CG 4way Ex | C.54 |
| 8564240000 | FBCon PA CG 8way Ex | C.55 |
| 8564250000 | FBCon PA CG/M12 8way Ex | C.55 |
| 8564290000 | FBCon DP CG Term 24V | C.24 |
| 8564300000 | FBCon PA CG 8way | C.39 |
| 8564310000 | FBCon PA CG/M12 8way | C.39 |
| 8564330000 | FBCon DP M12 Term 24V | C.24 |
| 8564340000 | FBCon DP CG 1way | C.23 |
| 8564350000 | FBCon DP M12 1way | C.23 |
| **8600000000** | | |
| 8606180000 | FBCon Term.D Ex FM/PEAN | C.56 |
| 8606190000 | FBCon Term.D Ex | C.56 |
| 8606200000 | FBCon Term.D Ex PEAN | C.56 |
| **8610000000** | | |
| 8613670000 | FBCon SS PCG 1way | C.36 |
| 8613680000 | FBCon SS PCG 4way | C.38 |
| **8640000000** | | |
| 8640720000 | FBCon SS PCG 8way | C.39 |
| **8700000000** | | |
| 8703430000 | FBCon SS CG 1way | C.36 |
| 8703450000 | FBCon SS CG 4way | C.38 |
| 8703470000 | FBCon SS CG 8way | C.39 |
| **8710000000** | | |
| 8714080000 | FBCon PA CG/M12 1way OVP | C.41 |
| 8714090000 | FBCon PA CG/M12 2way OVP | C.42 |
| 8714100000 | FBCon PA CG/M12 4way OVP | C.43 |
| 8714110000 | FBCon PA CG/M12 8way OVP | C.44 |
| 8714120000 | FBCon PA CG 1way OVP | C.41 |
| 8714130000 | FBCon PA CG 2way OVP | C.42 |
| 8714140000 | FBCon PA CG 4way OVP | C.43 |
| 8714150000 | FBCon PA CG 8way OVP | C.44 |
| 8714160000 | FBCon PA CG/M12 1way Limiter | C.45 |
| 8714170000 | FBCon PA CG/M12 2way Limiter | C.46 |
| 8714180000 | FBCon PA CG/M12 4way Limiter | C.47 |
| 8714190000 | FBCon PA CG/M12 8way Limiter | C.48 |
| 8714200000 | FBCon PA CG 1way Limiter | C.45 |
| 8714210000 | FBCon PA CG 2way Limiter | C.46 |
| 8714220000 | FBCon PA CG 4way Limiter | C.47 |
| 8714230000 | FBCon PA CG 8way Limiter | C.48 |
| 8714240000 | FBCon SS DP PCG Term 24V | C.24 |
| 8714250000 | FBCon SS DP M12 Term 24V | C.24 |
| 8714260000 | FBCon SS DP PCG 1way | C.23 |
| 8714270000 | FBCon SS DP M12 1way | C.23 |
| 8715260000 | FBCon SS PCG 4way Limiter | C.47 |
| 8715270000 | FBCon SS PCG 1way OVP | C.41 |
| **8720000000** | | |
| 8726020000 | FBCon SS CG/M12 1way | C.36 |
| 8726040000 | FBCon SS CG/M12 4way | C.38 |
| 8726050000 | FBCon SS CG/M12 8way | C.39 |
| 8726080000 | FBCon SS PCG 4way OVP | C.43 |
| 8726090000 | FBCon SS PCG 8way OVP | C.44 |
| 8726110000 | FBCon SS PCG 1way Limiter | C.45 |
| 8726160000 | FBCon SS PCG 8way Limiter | C.48 |
| **8770000000** | | |
| 8771420000 | JPR 24VDC 1CO M12 | H.3 |
| 8771430000 | JPR 24VDC ISO 1CO M12 | H.3 |
| 8771440000 | JPTA 50MS 24VDC PNP M12 | H.4 |
| 8778490000 | JP CLIP M | H.7 |
| **8780000000** | | |
| 8788580000 | RS PB-DP T SUB-D | C.25 |
| **8790000000** | | |
| 8794080000 | SAI JP 5P LG 100 | H.8 |
| 8794090000 | SAI JP 4P LG 100 | H.8 |
| 8794120000 | JP TEST | H.6 |
| **8800000000** | | |
| 8800040000 | RS PB-DP T | C.25 |
| **8830000000** | | |
| 8836630000 | JPTA100MS 24VDC PNP M12 | H.4 |
| **8850000000** | | |
| 8852350000 | JPP NPN PNP 24VDC | H.5 |
| 8857030000 | JPP PNP NPN 24VDC | H.5 |
| **9000000000** | | |
| 9002650000 | KT 8 | K.7 |
| 9002660000 | KT 12 | K.7 |
| 9005000000 | STRIPAX | K.9 |
| **9010000000** | | |
| 9017330000 | STRIPAX ZERT | K.9 |
| **9030000000** | | |
| 9030060000 | AM 12 | C.69 |
| 9030060000 | AM 12 | C.70 |
| 9030060000 | AM 12 | C.73 |
| 9030060000 | AM 12 | C.74 |
| 9030060000 | AM 12 | K.8 |
| **9200000000** | | |
| 9202210000 | multi-stripax 6-16 | K.11 |
| 9202250000 | multi-stripax ASI | K.11 |
| 9202260000 | AIE multi-stripax 6-16 | K.11 |
| 9202300000 | AIE multi-stripax ASI | K.11 |
| 9203070000 | ERME MULTI-STRIPAX | K.11 |
| 9203100000 | ERAN MULTI-STRIPAX | K.11 |
| 9203110000 | STRIPPER 6-16 RED-LINE | K.8 |
| 9204350000 | IE-CST | C.69 |
| 9204350000 | IE-CST | C.70 |
| 9204350000 | IE-CST | C.73 |
| 9204350000 | IE-CST | C.74 |
| 9205760000 | multi-stripax GKW LW | K.11 |
| 9205770000 | AIE multi-stripax GKWLW | K.11 |
| **9450000000** | | |
| 9455110000 | AS-KG-GE | C.60 |
| 9455120000 | AS-KG-SW | C.60 |
| 9455640000 | FBCon M12 4P M EMC | C.32 |
| 9455640000 | FBCon M12 4P M EMC | D.15 |
| 9455640000 | FBCon M12 4P M EMC | D.5 |
| 9455650000 | POS-4P M12 PG13,5 150mm | C.33 |
| 9456000000 | SAI-4-S 4P M12 | I.12 |
| 9456000000 | SAI-4-S 4P M12 | I.6 |
| 9456000001 | SAI-4-S 5P M12 | I.12 |
| 9456000001 | SAI-4-S 5P M12 | I.6 |
| 9456010000 | SAI-6-S 4P M12 | I.12 |
| 9456010000 | SAI-6-S 4P M12 | I.6 |
| 9456010001 | SAI-6-S 5P M12 | I.12 |
| 9456010001 | SAI-6-S 5P M12 | I.6 |
| 9456020000 | SAI-8-S 4P M12 | I.12 |
| 9456020000 | SAI-8-S 4P M12 | I.6 |
| 9456050000 | SAI-SK-M12 | C.59 |
| 9456050000 | SAI-SK-M12 | D.31 |
| 9456050000 | SAI-SK-M12 | F.10 |
| 9456050000 | SAI-SK-M12 | F.14 |
| 9456050000 | SAI-SK-M12 | F.18 |
| 9456050000 | SAI-SK-M12 | F.23 |
| 9456050000 | SAI-SK-M12 | F.25 |
| 9456050000 | SAI-SK-M12 | F.27 |
| 9456050000 | SAI-SK-M12 | F.37 |
| 9456070150 | SAIL-VSBD-1.5U | B.48 |
| 9456100000 | SAIL-M12G-4-X.XU | B.4 |
| 9456100150 | SAIL-M12G-4-1.5U | B.11 |
| 9456100150 | SAIL-M12G-4-1.5U | B.4 |
| 9456100300 | SAIL-M12G-4-3.0U | B.4 |
| 9456100500 | SAIL-M12G-4-5.0U | B.4 |
| 9456101000 | SAIL-M12G-4-10U | B.4 |
| 9456140150 | SAIL-M12BG-5S1.5U | B.17 |
| 9456150000 | SAIL-M8BW-4-X.XU | B.5 |
| 9456150150 | SAIL-M8BW-4-1.5U | B.19 |
| 9456150150 | SAIL-M8BW-4-1.5U | B.5 |
| 9456150300 | SAIL-M8BW-4-3.0U | B.5 |
| 9456150500 | SAIL-M8BW-4-5.0U | B.5 |
| 9456151000 | SAIL-M8BW-4-10U | B.5 |
| 9456170150 | SAIL-VSCD-M12G-1.5U | B.49 |
| 9456180000 | SAI-4-F 4P PUR 3M | I.8 |
| 9456190000 | SAI-4-F 4P PUR 5M | I.6 |
| 9456190000 | SAI-4-F 4P PUR 5M | I.8 |
| 9456190002 | SAI-4-FMM-4P M12 5M | I.33 |
| 9456190002 | SAI-4-FMM-4P M12 5M | I.34 |
| 9456190002 | SAI-4-FMM-4P M12 5M | I.6 |
| 9456200000 | SAI-4-F 4P PUR 10M | I.6 |
| 9456200000 | SAI-4-F 4P PUR 10M | I.8 |
| 9456200002 | SAI-4-FMM-4P M12 10M | I.33 |
| 9456200002 | SAI-4-FMM-4P M12 10M | I.34 |
| 9456200002 | SAI-4-FMM-4P M12 10M | I.6 |
| 9456210000 | SAI-4-F 4P PUR 15M | I.6 |
| 9456210000 | SAI-4-F 4P PUR 15M | I.8 |
| 9456230000 | SAI-4-F 4P PUR 20M | I.6 |
| 9456230000 | SAI-4-F 4P PUR 20M | I.8 |
| 9456240150 | SAIL-VSCD-1.5U | B.49 |
| 9456320000 | SAI-4-F 5P PUR 3M | I.8 |
| 9456330000 | SAI-4-F 5P PUR 5M | I.6 |
| 9456330000 | SAI-4-F 5P PUR 5M | I.8 |
| 9456340000 | SAI-4-F 5P PUR 10M | I.6 |
| 9456340000 | SAI-4-F 5P PUR 10M | I.8 |
| 9456350000 | SAI-4-F 5P PUR 15M | I.6 |
| 9456350000 | SAI-4-F 5P PUR 15M | I.8 |
| 9456370000 | SAI-4-F 5P PUR 20M | I.6 |
| 9456370000 | SAI-4-F 5P PUR 20M | I.8 |
| 9456380000 | SAIL-M12BW-4-2LX.XU | B.8 |
| 9456380150 | SAIL-M12BW-4-2L1.5U | B.16 |
| 9456380150 | SAIL-M12BW-4-2L1.5U | B.8 |
| 9456380300 | SAIL-M12BW-4-2L3.0U | B.8 |
| 9456380500 | SAIL-M12BW-4-2L5.0U | B.8 |
| 9456381000 | SAIL-M12BW-4-2L10U | B.8 |
| 9456460000 | SAI-6-F 4P PUR 3M | I.8 |
| 9456470000 | SAI-6-F 4P PUR 5M | I.6 |
| 9456470000 | SAI-6-F 4P PUR 5M | I.8 |
| 9456480000 | SAI-6-F 4P PUR 10M | I.6 |
| 9456480000 | SAI-6-F 4P PUR 10M | I.8 |
| 9456490000 | SAI-6-F 4P PUR 15M | I.6 |
| 9456490000 | SAI-6-F 4P PUR 15M | I.8 |
| 9456500000 | SAIL-M12WM12G-5-X.XU | B.7 |
| 9456500150 | SAIL-M12WM12G-5-1.5U | B.7 |
| 9456500300 | SAIL-M12WM12G-5-3.0U | B.7 |
| 9456500500 | SAIL-M12WM12G-5-5.0U | B.7 |
| 9456501000 | SAIL-M12WM12G-5-10U | B.7 |
| 9456510000 | SAI-6-F 4P PUR 20M | I.6 |
| 9456510000 | SAI-6-F 4P PUR 20M | I.8 |
| 9456600000 | SAI-6-F 5P PUR 3M | I.8 |
| 9456610000 | SAI-6-F 5P PUR 5M | I.6 |
| 9456610000 | SAI-6-F 5P PUR 5M | I.8 |
| 9456620000 | SAI-6-F 5P PUR 10M | I.6 |
| 9456620000 | SAI-6-F 5P PUR 10M | I.8 |
| 9456630000 | SAI-6-F 5P PUR 15M | I.6 |
| 9456630000 | SAI-6-F 5P PUR 15M | I.8 |
| 9456650000 | SAI-6-F 5P PUR 20M | I.6 |
| 9456650000 | SAI-6-F 5P PUR 20M | I.8 |
| 9456660000 | SAIL-M12GM8G-4-X.XU | B.5 |
| 9456660150 | SAIL-M12GM8G-4-1.5U | B.29 |
| 9456660150 | SAIL-M12GM8G-4-1.5U | B.5 |
| 9456660300 | SAIL-M12GM8G-4-3.0U | B.5 |
| 9456660500 | SAIL-M12GM8G-4-5.0U | B.5 |
| 9456661000 | SAIL-M12GM8G-4-10U | B.5 |
| 9456670000 | SAIL-M12GM8W-4-X.XU | B.5 |
| 9456670150 | SAIL-M12GM8W-4-1.5U | B.29 |
| 9456670150 | SAIL-M12GM8W-4-1.5U | B.5 |
| 9456670300 | SAIL-M12GM8W-4-3.0U | B.5 |
| 9456670500 | SAIL-M12GM8W-4-5.0U | B.5 |
| 9456671000 | SAIL-M12GM8W-4-10U | B.5 |
| 9456690000 | SAIL-M12W-3-X.XU | B.4 |
| 9456690150 | SAIL-M12W-3-1.5U | B.11 |
| 9456690150 | SAIL-M12W-3-1.5U | B.4 |
| 9456690300 | SAIL-M12W-3-3.0U | B.4 |
| 9456690500 | SAIL-M12W-3-5.0U | B.4 |
| 9456691000 | SAIL-M12W-3-10U | B.4 |
| 9456740000 | SAI-8-F 4P PUR 3M | I.8 |
| 9456750000 | SAI-8-F 4P PUR 5M | I.6 |
| 9456750000 | SAI-8-F 4P PUR 5M | I.8 |
| 9456750002 | SAI-8-FMM-4P M12 5M | I.33 |
| 9456750002 | SAI-8-FMM-4P M12 5M | I.34 |
| 9456750002 | SAI-8-FMM-4P M12 5M | I.6 |
| 9456760000 | SAI-8-F 4P PUR 10M | I.6 |
| 9456760000 | SAI-8-F 4P PUR 10M | I.8 |
| 9456760002 | SAI-8-FMM-4P M12 10M | I.33 |
| 9456760002 | SAI-8-FMM-4P M12 10M | I.34 |
| 9456760002 | SAI-8-FMM-4P M12 10M | I.6 |
| 9456770000 | SAI-8-F 4P PUR 15M | I.6 |
| 9456770000 | SAI-8-F 4P PUR 15M | I.8 |
| 9456790000 | SAI-8-F 4P PUR 20M | I.6 |
| 9456790000 | SAI-8-F 4P PUR 20M | I.8 |
| 9456880000 | SAI-8-F 5P PUR 3M | I.8 |
| 9456890000 | SAI-8-F 5P PUR 5M | I.6 |
| 9456890000 | SAI-8-F 5P PUR 5M | I.8 |
| 9456900000 | SAI-8-F 5P PUR 10M | I.6 |
| 9456900000 | SAI-8-F 5P PUR 10M | I.8 |
| 9456910000 | SAI-8-F 5P PUR 15M | I.6 |
| 9456910000 | SAI-8-F 5P PUR 15M | I.8 |
| 9456930000 | SAI-8-F 5P PUR 20M | I.6 |
| 9456930000 | SAI-8-F 5P PUR 20M | I.8 |
| 9456940000 | SAIS-5/7 | D.5 |
| 9456940000 | SAIS-5/7 | D.8 |
| 9456950000 | SAISW-5/7 | D.5 |
| 9456950000 | SAISW-5/7 | D.8 |
| 9456990150 | SAIL-M12GM12G-2/4-1.5U | B.26 |
| 9457040000 | SAIL-VSA-M12G-1.5U | B.47 |
| 9457230000 | SAIL-M12GM12G-3-X.XU | B.6 |
| 9457230150 | SAIL-M12GM12G-3-1.5U | B.25 |
| 9457230150 | SAIL-M12GM12G-3-1.5U | B.6 |
| 9457230300 | SAIL-M12GM12G-3-3.0U | B.6 |
| 9457230500 | SAIL-M12GM12G-3-5.0U | B.6 |
| 9457231000 | SAIL-M12GM12G-3-10U | B.6 |
| 9457240000 | SAIB-4/7 | D.5 |
| 9457240000 | SAIB-4/7 | D.7 |
| 9457250000 | SAIB-5/7 | D.5 |
| 9457250000 | SAIB-5/7 | D.8 |
| 9457260000 | SAIBW-5/7 | D.5 |

| Order No. | Type | Page |
|---|---|---|
| 9457260000 | SAIBW-5/7 | D.8 |
| 9457270000 | SAIL-M12GM12W-5-X.XU | B.7 |
| 9457270150 | SAIL-M12GM12W-5-1.5U | B.25 |
| 9457270150 | SAIL-M12GM12W-5-1.5U | B.7 |
| 9457270300 | SAIL-M12GM12W-5-3.0U | B.7 |
| 9457270500 | SAIL-M12GM12W-5-5.0U | B.7 |
| 9457271000 | SAIL-M12GM12W-5-10U | B.7 |
| 9457290000 | SAISW-4/7 | D.5 |
| 9457290000 | SAISW-4/7 | D.7 |
| 9457310000 | SAIL-M12GM12W-4-X.XU | B.7 |
| 9457310150 | SAIL-M12GM12W-4-1.5U | B.25 |
| 9457310150 | SAIL-M12GM12W-4-1.5U | B.7 |
| 9457310300 | SAIL-M12GM12W-4-3.0U | B.7 |
| 9457310500 | SAIL-M12GM12W-4-5.0U | B.7 |
| 9457311000 | SAIL-M12GM12W-4-10U | B.7 |
| 9457320000 | SAIL-M12BW-3-X.XU | B.7 |
| 9457320150 | SAIL-M12BW-3-1.5U | B.11 |
| 9457320150 | SAIL-M12BW-3-1.5U | B.7 |
| 9457320300 | SAIL-M12BW-3-3.0U | B.7 |
| 9457320500 | SAIL-M12BW-3-5.0U | B.7 |
| 9457321000 | SAIL-M12BW-3-10U | B.7 |
| 9457340000 | SAIL-M12GM12G-5-X.XU | B.7 |
| 9457340030 | SAIL-M12GM12G-5-0.3U | H.7 |
| 9457340060 | SAIL-M12GM12G-5-0.6U | H.7 |
| 9457340150 | SAIL-M12GM12G-5-1.5U | B.25 |
| 9457340150 | SAIL-M12GM12G-5-1.5U | B.7 |
| 9457340150 | SAIL-M12GM12G-5-1.5U | H.7 |
| 9457340300 | SAIL-M12GM12G-5-3.0U | B.7 |
| 9457340500 | SAIL-M12GM12G-5-5.0U | B.7 |
| 9457341000 | SAIL-M12GM12G-5-10U | B.7 |
| 9457350000 | SAI-8-MF 5P PUR 5M 0L | I.44 |
| 9457380000 | SAIL-M8BWS-3-X.XU | B.5 |
| 9457380150 | SAIL-M8BW-3-1.5U | B.19 |
| 9457380150 | SAIL-M8BW-3-1.5U | B.5 |
| 9457380300 | SAIL-M8BW-3-3.0U | B.5 |
| 9457380500 | SAIL-M8BW-3-5.0U | B.5 |
| 9457381000 | SAIL-M8BW-3-10U | B.5 |
| 9457390000 | SAIL-M12GM12W-3-X.XU | B.7 |
| 9457390150 | SAIL-M12GM12W-3-1.5U | B.25 |
| 9457390150 | SAIL-M12GM12W-3-1.5U | B.7 |
| 9457390300 | SAIL-M12GM12W-3-3.0U | B.7 |
| 9457390500 | SAIL-M12GM12W-3-5.0U | B.7 |
| 9457391000 | SAIL-M12GM12W-3-10U | B.7 |
| 9457400150 | SAIL-VSC-M12G-1.5U | B.49 |
| 9457410150 | SAIL-ZW-M8BW-3L1.5U | B.39 |
| 9457420000 | SAIH-SLL-3x0,75-8x0,34 | B.57 |
| 9457430000 | SAI-8-MF 5P PUR 10m | I.44 |
| 9457450000 | SAIL-M8BGS-3-X.XU | B.4 |
| 9457450150 | SAIL-M8BG-3-1.5U | B.19 |
| 9457450150 | SAIL-M8BG-3-1.5U | B.4 |
| 9457450300 | SAIL-M8BG-3-3.0U | B.4 |
| 9457450500 | SAIL-M8BG-3-5.0U | B.4 |
| 9457451000 | SAIL-M8BG-3-10U | B.4 |
| 9457460000 | SAIL-M8BW-3LX.XU | B.5 |
| 9457460150 | SAIL-M8BW-3L1.5U | B.21 |
| 9457460150 | SAIL-M8BW-3L1.5U | B.5 |
| 9457460300 | SAIL-M8BW-3L3.0U | B.5 |
| 9457460500 | SAIL-M8BW-3L5.0U | B.5 |
| 9457461000 | SAIL-M8BW-3L10U | B.5 |
| 9457490150 | SAIL-ZW-M8BG-3-1.5U | B.39 |
| 9457540000 | SAIS-ZW-5 | D.30 |
| 9457550000 | SAIS-4/7 | D.5 |
| 9457550000 | SAIS-4/7 | D.7 |
| 9457560000 | SAIH-SLL-3X0.75-16X0.34 | B.57 |
| 9457570150 | SAIL-M12GM8WR-3-1.5U | B.30 |
| 9457590000 | SAI-8-F 5P 5M 0.5/1.0U | I.8 |
| 9457600000 | SAI-8-F 5P 10M 0.5/1.0U | I.8 |
| 9457610000 | SAIL-M12G-5-X.XU | B.4 |
| 9457610150 | SAIL-M12G-5-1.5U | B.11 |
| 9457610150 | SAIL-M12G-5-1.5U | B.4 |
| 9457610300 | SAIL-M12G-5-3.0U | B.4 |
| 9457610500 | SAIL-M12G-5-5.0U | B.4 |
| 9457611000 | SAIL-M12G-5-10U | B.4 |
| 9457670000 | SAIL-M12W-5-X.XU | B.4 |
| 9457670150 | SAIL-M12W-5-1.5U | B.11 |
| 9457670150 | SAIL-M12W-5-1.5U | B.4 |
| 9457670300 | SAIL-M12W-5-3.0U | B.4 |
| 9457670500 | SAIL-M12W-5-5.0U | B.4 |
| 9457671000 | SAIL-M12W-5-10U | B.4 |
| 9457680150 | SAIL-VSB-M12G-1.5U | B.48 |
| 9457690000 | SAIL-M12BW-5-X.XU | B.7 |
| 9457690150 | SAIL-M12BW-5-1.5U | B.11 |
| 9457690150 | SAIL-M12BW-5-1.5U | B.7 |
| 9457690300 | SAIL-M12BW-5-3.0U | B.7 |
| 9457690500 | SAIL-M12BW-5-5.0U | B.7 |
| 9457691000 | SAIL-M12BW-5-10U | B.7 |
| 9457700000 | SAIBW-4/7 | D.5 |
| 9457700000 | SAIBW-4/7 | D.7 |
| 9457710150 | SAIL-VSA-1.5U | B.47 |
| 9457720000 | SAI-SA-3-IDC | I.26 |
| 9457730000 | SAIL-M12BG-4-X.XU | B.6 |
| 9457730150 | SAIL-M12BG-4-1.5U | B.11 |
| 9457730150 | SAIL-M12BG-4-1.5U | B.6 |
| 9457730300 | SAIL-M12BG-4-3.0U | B.6 |
| 9457730500 | SAIL-M12BG-4-5.0U | B.6 |
| 9457731000 | SAIL-M12BG-4-10U | B.6 |
| 9457740000 | SAIL-M12GM12G-5-X.XU | B.7 |
| 9457740150 | SAIL-M12BW-4-1.5U | B.11 |
| 9457740150 | SAIL-M12BW-4-1.5U | B.7 |

| Order No. | Type | Page |
|---|---|---|
| 9457740300 | SAIL-M12BW-4-3.0U | B.7 |
| 9457740500 | SAIL-M12BW-4-5.0U | B.7 |
| 9457741000 | SAIL-M12BW-4-10U | B.7 |
| 9457760000 | SAIL-M12GM8W-3LX.XU | B.5 |
| 9457760150 | SAIL-M12GM8W-3L1.5U | B.31 |
| 9457760150 | SAIL-M12GM8W-3L1.5U | B.5 |
| 9457760300 | SAIL-M12GM8W-3L3.0U | B.5 |
| 9457760500 | SAIL-M12GM8W-3L5.0U | B.5 |
| 9457761000 | SAIL-M12GM8W-3L10U | B.5 |
| 9457770000 | SAIL-M12GM8G-3-X.XU | B.4 |
| 9457770150 | SAIL-M12GM8G-3-1.5U | B.29 |
| 9457770150 | SAIL-M12GM8G-3-1.5U | B.4 |
| 9457770300 | SAIL-M12GM8G-3-3.0U | B.4 |
| 9457770500 | SAIL-M12GM8G-3-5.0U | B.4 |
| 9457771000 | SAIL-M12GM8G-3-10U | B.4 |
| 9457780150 | SAIL-VSBD-M12G-1.5U | B.48 |
| 9457790000 | SAIL-M12GM12W-3LX.XU | B.8 |
| 9457790150 | SAIL-M12GM12W-3L1.5U | B.27 |
| 9457790150 | SAIL-M12GM12W-3L1.5U | B.8 |
| 9457790300 | SAIL-M12GM12W-3L3.0U | B.8 |
| 9457790500 | SAIL-M12GM12W-3L5.0U | B.8 |
| 9457791000 | SAIL-M12GM12W-3L10U | B.8 |
| 9457800000 | SAIL-M12BW-3LX.XU | B.8 |
| 9457800150 | SAIL-M12BW-3L1.5U | B.16 |
| 9457800150 | SAIL-M12BW-3L1.5U | B.8 |
| 9457800300 | SAIL-M12BW-3L3.0U | B.8 |
| 9457800500 | SAIL-M12BW-3L5.0U | B.8 |
| 9457801000 | SAIL-M12BW-3L10U | B.8 |
| 9457810000 | SAIL-M12G-3-X.XU | B.4 |
| 9457810150 | SAIL-M12G-3-1.5U | B.11 |
| 9457810150 | SAIL-M12G-3-1.5U | B.4 |
| 9457810300 | SAIL-M12G-3-3.0U | B.4 |
| 9457810500 | SAIL-M12G-3-5.0U | B.4 |
| 9457811000 | SAIL-M12G-3-10U | B.4 |
| 9457820000 | SAIL-M12BG-3-X.XU | B.6 |
| 9457820150 | SAIL-M12BG-3-1.5U | B.11 |
| 9457820150 | SAIL-M12BG-3-1.5U | B.6 |
| 9457820300 | SAIL-M12BG-3-3.0U | B.6 |
| 9457820500 | SAIL-M12BG-3-5.0U | B.6 |
| 9457821000 | SAIL-M12BG-3-10U | B.6 |
| 9457850150 | SAIL-M8BG-4-1.5U | B.19 |
| 9457850150 | SAIL-M8BG-4-1.5U | B.5 |
| 9457850300 | SAIL-M8BG-4-3.0U | B.5 |
| 9457850500 | SAIL-M8BG-4-5.0U | B.5 |
| 9457851000 | SAIL-M8BG-4-10U | B.5 |
| 9457890150 | SAIL-M12GM12W-2/4-1.5U | B.26 |
| 9457900000 | SAIL-M12WM12W-5-X.XU | B.7 |
| 9457900150 | SAIL-M12WM12W-5-1.5U | B.25 |
| 9457900150 | SAIL-M12WM12W-5-1.5U | B.7 |
| 9457900300 | SAIL-M12WM12W-5-3.0U | B.7 |
| 9457900500 | SAIL-M12WM12W-5-5.0U | B.7 |
| 9457901000 | SAIL-M12WM12W-5-10U | B.7 |
| 9457910000 | SAIL-M12BG-5-X.XU | B.7 |
| 9457910150 | SAIL-M12BG-5-1.5U | B.11 |
| 9457910150 | SAIL-M12BG-5-1.5U | B.7 |
| 9457910300 | SAIL-M12BG-5-3.0U | B.7 |
| 9457910500 | SAIL-M12BG-5-5.0U | B.7 |
| 9457911000 | SAIL-M12BG-5-10U | B.7 |
| 9457920150 | SAIL-VSC-1.5U | B.49 |
| 9457930150 | SAIL-VSB-1.5U | B.48 |
| 9457950150 | SAIV-M12BG-4-1.5U | B.13 |
| 9457960150 | SAIV-M12BW-4-1.5U | B.13 |
| 9457970000 | SAIH-SLL-5X0,75-16X0,34 | B.57 |
| 9457980000 | SAIL-M12GM8W-3-X.XU | B.5 |
| 9457980150 | SAIL-M12GM8W-3-1.5U | B.29 |
| 9457980150 | SAIL-M12GM8W-3-1.5U | B.5 |
| 9457980300 | SAIL-M12GM8W-3-3.0U | B.5 |
| 9457980500 | SAIL-M12GM8W-3-5.0U | B.5 |
| 9457981000 | SAIL-M12GM8W-3-10U | B.5 |

# Addresses worldwide

**AE United Arab Emirates**
Weidmuller Middle East FZE
P.O. Box 8591, SAIF-Zone
Sharjah U. A. E.
Phone +971 6 5572723
Fax +971 6 5572724
wme.info@weidmueller.com

**AR Argentina**
CPI SA
Bauness 2660
1431 Buenos Aires
Phone +54 11 45238008
Fax +54 11 45220546
info@cpi.com.ar
www.cpi.com.ar

**AT Austria**
Weidmüller GmbH Austria
Straße 2, Industriezentrum Nö
Süd Straße 2b M59
2355 Wiener Neudorf
Phone +43 2236 6708-0
Fax +43 2236 6708-199
office.at@weidmueller.com

**AU Australia**
Weidmüller Pty. Ltd.
P.O.Box 6944
Huntingwood Drive 43
Huntingwood,
NSW, 2148
Phone +61 2 9671-9999
Fax +61 2 9671-9911
info@weidmuller.com.au
www.weidmuller.com.au

**AZ Azerbaijan**
West Industries Ltd.
Caspian Plaza, 5-th Floor
44 J. Jabbarly Str., Baku
Phone +99412 596 15 15
Fax +99412 596 14 93
sales@west-i.com

**BA Bosnia and Herzegovina**
Representative Office
Weidmüller Interface
GmbH & Co. KG
Beograd-Stari Grad
Danice Marković 2
11050 Beograd
Srbija
Phone +381 11 288 5274
Fax +381 11 288 5274
zoran.rabrenovic@
weidmueller.com

BH ES ELEKTROSISTEM d.o.o.
Bul. Vojvode S.
Stepanovica kod br. 272
78000 BiH - Banja Luka
Phone +387 51 420-340
Fax +387 51 420-341
elsist@inecco.net
www.elektrosistem.ba

**BE Belgium**
Weidmüller Benelux B.V.
Mechelsesteenweg 519 bus
6 en 7
1930 Nossegem
Phone +32 2 752 4070
Fax +32 2 751 3606
info@weidmueller.be
www.weidmueller.be

**BG Bulgaria**
Weid-Bul EOOD
1756 Sofia
13, bul. "Kliment Ohridski"
Phone +359 2 9632560
Fax +359 2 9631098
sofia@weidbul.com
www.weidbul.com

**BH Bahrain**
Khayber Trading Company
P.O. Box 1976 Manama,
Phone +973 720747
Fax +973 720331
khayber@batelco.com.bh

**BR Brazil**
Weidmüller Conexel do Brasil
Conexões Elétricas Ltda.
Rua Garcia Lorca, 176
09695-900, Sao Paulo SP
Phone +55 11 43669600
Fax +55 11 43621677
vendas@weidmueller.com.br
www.weidmueller.com.br

**BY Belarus**
Technikon Ltd.
Nezavisimosti pr.177-9
Minsk 220125
Phone +375 17 3931177
Fax +375 17 3930080
wm@technikon.by

**CA Canada**
W Interconnections CANADA
Ltd.
10 Spy Court, Markham,
Ontario L3 R5 H6
Phone +1 905 475-1507
Fax +1 905 475-2798
info1@weidmuller.ca
www.weidmuller.ca

**CH Switzerland**
Weidmüller Schweiz AG
Rundbuckstraße 2
8212 Neuhausen am Rheinfall
Phone +41 52 6740707
Fax +41 52 6740708
info@weidmueller.ch
www.weidmueller.ch

**CL Chile**
Felipe Bahamondes S.A./
ATS AGRO
Maria Luisa Santander 0475
Casilla 3425
Santiago
Phone +56 2 341-1271
Fax +56 2 341-1275
felipe@atsintech.com

CPI CHILE LTDA
Av. Presidente Frei Montalva
6001-47, Conchali -
Region Metropolitana -
Santiago
cpi@cpichile.cl

**CN China**
Weidmüller Interface
International Trading
(Shanghai) Co., Ltd.
25F, BM Intercontinental
Business Center,
100 Yutong Road,Shanghai
200070
P.R. China
Phone +86 21 22195008
Fax +86 21 22195009
www.cnweidmuller.com

**CO Colombia**
Automatización Avanzada S. A.
Carrera 97 No.24c, 23 B4
4 Bogotá D. C.
Phone +57 1 5478510
Fax +57 1 4223044
comercial@
automatizacionavanzada.com
www.
automatizacionavanzada.com

**CR Costa Rica**
ELVATRON S.A.
la Uruca 400 Norte
Banco Costa Rica
San José Costa Rica
Phone +506 2 961060
Fax +506 5 200609
dirk.haase@elvatron.com
www.elvatron.com

**CZ Czech Republic**
Weidmüller s. r. o.
Lomnického 5/1705
14000 Praha 4
Phone +420 2 44001400
Fax +420 2 44001499
office@weidmueller.cz
www.weidmueller.cz

**DE Germany**
Weidmüller GmbH & Co. KG
Postfach 3054
32720 Detmold
Ohmstraße 9
32758 Detmold
Phone +49 5231 1428-0
Fax +49 5231 1428-116
weidmueller@weidmueller.de
www.weidmueller.de

**DK Denmark**
Wexøe A/S
Lejrvej 31
3500 Vaerloese
Phone +45 45465800
Fax +45 45465801
wexoe@wexoe.dk
www.wexoe.dk

**EC Ecuador**
Elsystec S. A. Electricidad
Sistemas y Tecnología
Vasco de Contreras N35-25
y Mañosca, Quito
Phone +593 2 2456510
Fax +593 2 2456755
Elsystec@uio.satnet.net

**EE Estonia**
Representative Office
Weidmüller Interface
GmbH & Co. KG
Udens str. 12-118
Riga, LV-1007
Latvia
Phone +371 29254766
Fax +371 67624562
ilgonis.rudaks@
weidmueller.com

Soots Interface OÜ
Pärnu mnt 142
11317 Tallinn
Phone +372 5296177
Fax +372 6096933
info@sootsinterface.ee
www.sootsinterface.ee

**EG Egypt**
Standard Electric (OMEGA)
87, Mohamed Farid Street
Heliopolis, Cairo
Phone +20 26422977
Fax +20 26422955
stdelec@rite.com

**ES Spain**
Weidmüller S. A.
Narcis Monturiol 11-13
Pol. Ind. Sudoeste
08960 Sant Just Desvern
Barcelona
Phone +34 93 4803386
Fax +34 93 3718055
weidmuller@weidmuller.es
www.weidmuller.es

**FI Finland**
JUHA-ELEKTRO OY
P. O. Box 57, 641 Helsinki
Kylvöpolku 6, 680 Helsinki
Phone +358 10 8328 100
Fax +358 10 8328 109
info@juha-elektro.fi
www.juha-elektro.fi

**FR France**
Weidmüller E. U. R. L.
12, Chaussée Jules César
B.P. 263 Osny
95523 Cergy Pontoise Cedex
Phone +33 1 34245500
Fax +33 1 34245501
mail@weidmuller.fr

**GB Great Britain**
Weidmüller Ltd
Klippon House
Centurion Court Office
Meridian East, Meridian
Business Park
Leicester, LE19 1TP
Phone +44 1162 823470
Fax +44 1162 893582
marketing@weidmuller.co.uk
www.weidmuller.co.uk

**GR Greece**
Electrorama S.A.
1 An. Martali Str.
41335 Larissa
Phone +30 2410 552533188
Fax +30 2410 283463189
valvizos@electrorama.com.gr

GA Contact Solutions
11, Ippokratous Str.
14452 Metamorfosi Attika
Phone +30 210 2823233
Fax +30 210 2823233
gasaless@gmail.com

**HK Hong Kong**
Weidmüller (Hong Kong)
Limited
Unit 1617, The Metropolis
Tower, No.10, Metropolis
Drive, Hunghom, Kowloon
Phone +852 31548082
Fax +852 31548099
info-hk@weidmueller.de
Hong Kong

**HR Croatia**
Elektro Partner d.o.o.
Slavonska Avenija 24/6
10000 Zagreb
Phone +385 1 6184793
Fax +385 1 6184795
elektropartner@zg.t-com.hr

**HU Hungary**
Weidmüller Kft
Gubacsi út 6
1097 Budapest
Phone +36 1 3827700
Fax +36 1 3827701
info@weidmueller.hu

**ID Indonesia**
PT. Nego Electrindo
Ruko Mega Grosir Cempaka
Mas, Blok I No 20 – 22
Jl. Let.Jend. Suprato –
Jakarta 10640
Phone +62 21 42882255
Fax +62 21 42882266
sales@negoelectrindo.co.id

**IE Ireland**
Please contact
Weidmüller Ltd.
in Great Britain

**IL Israel**
A.U.Shay Ltd.
P.O. Box 10049
Embar Street 23/25
49222 Petach-Tikva
Phone +972 3 9233601
Fax +972 3 9234601

ATEKA Ltd.
4, Ha'Tavor lane
Industrial area Segula
49691 Petach-Tikva
Phone +972 73 2001311
Fax +972 3 9244245
marketing@ateka.co.il
www.ateka.co.il

**IN India**
Weidmuller
Electronics India Pvt. Ltd
Plot # 32, 3rd Floor,
North Court
Lane North Avenue,
Opp Jogger's Park
Kalyani Nagar, Maharastra
411006 Pune
Phone +91 9049800960
Nitish.Rajan@weidmueller.de

**IS Iceland**
Samey Automation Center
Lyngas 13, 210 Garoabaer,
Phone +354 510 5200
Fax +354 510 5201
samey@samey.is

**IT Italy**
Weidmüller S.R.L.
Via Albert Einstein 4
20092 Cinisello Balsamo
Milano
Phone +39 02 660681
Fax +39 02 6124945
weidmuller@weidmuller.it
www.weidmuller.it

**JO Jordan**
HORIZONS
P.O.Box: 330607
Amman Jordan 11133
Phone +962 6 4882114
Fax +962 6 4882115
horizons@go.com.jo

**JP Japan**
Nihon Weidmüller Co. Ltd.
Sphere Tower Tennoz,
2-2-8 Higashi-Shinagawa,
Shinagawa-Ku,
Tokyo 140-0002
Phone +81 3 6711-5300
Fax +81 3 6711-5333
www.weidmuller.co.jp

**KR Korea**
Weidmuller Korea Co. Ltd.
6F Seokyoung B/D,
242-54 Nonhyun-dong,
Gangnam-gu
Seoul, 135-830
Phone +82 2 5160003
Fax +82 2 5160090
info@weidmuller.co.kr

**KW Kuwait**
KANA CONTROLS General
Trading & Cont. CO. W.L.L.
Al Rai Industrial Area,
Plot 28-30, St. 31
P.O.Box: 25593
Safat, 13016
Phone +966-474 1373/4
Fax +966-474 1537
info@kanacontrols.com

**LB Lebanon**
Progress Engineering &
Trading Enterprises
Al Nahr Street, Beirut
Phone +961 1 444664
Fax +961 1 561880
progress@inco.com.lb

**LT Lithuania**
Representative Office
Weidmüller Interface
GmbH & Co. KG
Udens str. 12-118
Riga, LV-1007
Latvia
Phone +371 29254766
Fax +371 67624562
ilgonis.rudaks@
weidmueller.com

ELEKTROS IRANGA
Tinklu g.29a, 5319 Panevezys
Phone +370 45582828
Fax +370 45582727
info@eliranga.lt

**LU Luxembourg**
Please contact
Weidmüller Benelux B.V.
in the Netherlands

**LV Latvia**
Representative Office
Weidmüller Interface
GmbH & Co. KG
Udens str. 12-118
Riga, LV-1007
Latvia
Phone +371 29254766
Fax +371 67624562
ilgonis.rudaks@
weidmueller.com

SIA "ABI4"
Daugavgrivas str. 31b
1007 Riga
Phone +371 67470999
Fax +371 67465637
abi_4@tvnet.lv

**MD Moldova**
BERHORD A&D srl
44, srt. Sarmizegetusa 37/3
Off 414. b-dul Decebal, 3,
Chisinau, MD 2001
Phone +373 22 507137
Fax +373 22 507134
atiuleanu@berhord.com

**ME Montenegro**
Representative Office
Weidmüller Interface
GmbH & Co. KG
Beograd-Stari Grad
Danice Marković 2
11050 Beograd
Srbija
Phone +381 11 288 5274
Fax +381 11 288 5274
zoran.rabrenovic@
weidmueller.com

**MK Macedonia**
Representative Office
Weidmüller Interface
GmbH & Co. KG
Beograd-Stari Grad
Danice Marković 2
11050 Beograd
Srbija
Phone +381 11 288 5274
Fax +381 11 288 5274
zoran.rabrenovic@
weidmueller.com

ELEKTRO – SMK dooel
UL. III Makedonska brigada b.b.
1000 Skopje
Phone +389 22 460 295
Fax +389 22 460 298
Elektro-smk@telekabel.net.mk

Group companies DE
Agency abroad DE
Without own Agency DE

**MT Malta**
E. S. S., Electrical Supplies
& Services Ltd
104 J. Sciberras Str.
Hamrun HMR 08
Phone +356 21 255 777
Fax +356 21 255 999
robert@ess.com.mt

**MU Mauritius**
MUBELO Electrical Ltd
Office 26, Gateway building,
St Jean Road, Quatre Bornes
Phone +230 467 0989
Fax +230 465 4051
richard.mubelo@orange.mu

**MX Mexico**
W Interconnections,
S.A. DE C.V.
Blvd. Hermanos Serdán
No. 698
Col. San Rafael Oriente
Puebla, C.P. 72029
Phone +52 222 22686227
clientes@weidmuller.com.mx

**MY Malaysia**
Connect Plus Technology
Sdn Bhd
No. 43, Jalan PJS, 11/22,
Bandar Sunway,
46150 Petaling Jaya
Selangor Darul Ehsan
Phone +60 3 5633 7363
Fax +60 3-5633 6562
paul@cptech.com.my
www.cptech.com.my

**NL Netherlands**
Weidmüller Benelux B.V.
Franciscusweg 221
1216 SE Hilversum
Postbus 1505
1200 BM Hilversum
Phone +31 35 6261261
Fax +31 35 6232044
info@weidmuller.nl
www.weidmuller.nl

**NO Norway**
Siv. Ing. J. F. Knudtzen A/S
Billingstadsletta 97
P.O. Box 160
1378 Nesbru
Phone +47 66 983350
Fax +47 66 980955
firmapost@jfknudtzen.no
www.jfknudtzen.no

**NZ New Zealand**
Cuthbert S. Steward Limited
27 Te Puni Street
POB 38496
Petone, Wellington
Phone +64 4 5686156
Fax +64 4 5686056
info@weidmueller.de

**OM Oman**
DAN INTERNATIONAL LLC.
PO.BOX 2901
111 Seeb
Phone +968 503 677
Fax +968 503 755
yedu@danintl.com

**PE Peru**
IMPEXINCA S.A.C.
Calle Ortiz de Zevallos N°105,
18 Lima, Miraflores,
Phone +511 447 5608
info@impexinca.pe

J & W CIA. S.A.
Calle 6 Mz. D Lte. 23
Urb. Ind. Grimanesa
Callao 01
Phone +51 1 57 22539
Fax +51 1 57 20152
lespinoza@jwcia.com
www.jwcia.com

**PH Philippines**
Enclosure Systems Specialists Inc
Room 103 Narra Building
2276 Don Chino Roces
Avenue
Makati City 1231
Phone +63 2 813 8580
Fax +63 2 813 8596
sales_encsys@pldtdsl.net

**PK Pakistan**
Kana Controls (Pak)
Apartment No. 33 C III
Chenab Block,
Allama Iqbal Town
Lahore, Pakistan
Phone +92 42 5419948
+92 42 7845160
Fax +92 42 5422895
nadeem@kanapak.com
www.kanapak.com

**PL Poland**
Weidmüller Sp. z o.o.
Ul. Goledzinowska 10
03-302 Warszawa
Phone +48 22 5100940
Fax +48 22 5100941
biuro@weidmuller.com.pl
www.weidmuller.pl

**PT Portugal**
Weidmüller Sistemas de
Interface S. A.
Estrada Outeiro Polima,
R. Augusto
Dias da Silva, Lote B, Esct. 2
2785-515 Abóboda -São
Domingos de Rana
Phone +351 21 4459191
Fax +351 21 4455871
www.weidmueller.pt

**QA Qatar**
Doha Motors Trading Co.
(Technical Division)
Post Box No. 145
Airport Road
Doha - Qatar
Phone +974 465 1441
Fax +974 465 0925
dmtctech@qatar.net.qa

**RO Romania**
Rominterface Impex SRL
Str. Gh. Dem Teodorescu 30 A
30916 Bucuresti - sector 3
Phone +40 21 3220230
Fax +40 21 3228857
office@rominterface.ro

**RS Serbia**
Representative Office
Weidmüller Interface
GmbH & Co. KG
Ustanicka 189, III sprat,
lokal 7a
11050 Beograd
Phone +381 11 288 5274
Fax +381 11 288 5274
zoran.rabrenovic@
weidmueller.com

ES-YU Elektrosistem
Pariske komune 41
11070 Novi Beograd, Serbia
Phone +381 11 3018660
Fax +381 11 2693608
esyu@eunet.rs

**RU Russia**
OOO Weidmüller
Warshavskoye highway, 25A,
bld. 6
117105 Moskau
Phone +7 4 95 771-6940
Fax +7 4 95 771-6941
info@weidmueller.ru
www.weidmueller.ru

**SA Saudi-Arabia**
Al Abdulkarim Holding Co.
P.O Box. 4
Dammam 31411
Phone +9668337110
Fax +9668338242
salehsk@akh.com.sa
www.weidmueller.ae

Saudi Electric Supply Co.
P.O. Box 3298
Al Khobar 31952
Phone +966 3 882 9546227
Fax +966 3 882 9547
Safdar.malik@sesco-ge.com

**SE Sweden**
Weidmüller AB
Axel Daniessons väg 271
P.O. box 31025
200 49 Malmö
Phone +46 (0) 7 71 43 00 44
Fax +46 (0) 40 37 48 60
info@weidmuller.se
www.weidmuller.se

**SG Singapore**
Weidmuller Pte. Ltd.
70 Bendemeer Road
#04-03 Luzerne
Singapore 339940
Phone +65 6841 5311
Fax +65 6841 5377
info@weidmuller.com.sg
www.weidmuller.com.sg

**SI Slovenia**
ELEKTROSPOJI d.o.o.
Stegne 25, 1000 Ljubljana
Phone +386 15113810
Fax +386 15111604
info@elektrospoji.si
www.elektrospoji.si

**SK Slovakia**
ELEKTRIS s.r.o.
Elektrárenská 1
83104 Bratislava
Phone +421 2 49200113
Fax +421 2 49200119
bratislava@elektris.sk

**TH Thailand**
Pisanu Engineering Co., Ltd
800/43-45 Soi Trakulsuk
Asoke-dindaeng Road,
Dindaeng, Bangkok 10400
Phone +66 2 245 9113
Fax +66 2 6429220
jayasankar@pisanu.co.th
www.pisanu.co.th

**TN Tunisia**
Please contact
Weidmüller E.U.R.L.
in France

**TR Turkey**
Weidmüller Elektronik Ticaret
Ltd. Sirketi
Kavacik Mah. Orhan Veli Kanik
Caddesi 9/1
34810 Beykoz – Istanbul
Phone +90 216 5371070 (Pbx)
Fax +90 216 5371077
info@weidmuller.com.tr
www.weidmuller.com.tr

**TW Taiwan**
Fittatek Co., Ltd.
12F No. 185 Fu-Kuo Road,
Tso Ying Dist, Kaohsiung
Phone +886 7 556 0858
Fax +886 7 556 3279
stanley@fittatek.com.tw
www.fittatek.com.tw

Eucan Enterprise Ltd.
No. 145 He Ping 2nd Rd
Kaohsiung
Phone +886 7 715 6610
Fax +886 7 715 8748
mark@eucan.com.tw
www.eucan.com.tw

**UA Ukraine**
TEKO INTERFACE
Lomonosova str. 73g
03022 Kiev
Phone +38 044 3740640
Fax +38 044 3740642
weidmueller@tekointerface.com
www.tekointerface.com.ua

**US United States**
W-Interconnections Inc.
821 Southlake Boulevard,
Virginia - Richmond 23236
Phone +1 804 7942877
Fax +1 804 3792593
info@weidmuller.com
www.weidmuller.com

**UY Uruguay**
REWO Uruguay S.A
AV. Bolivia 2001 Esq Rocafuerte
Carrasco Montevideo 11300
Phone / Fax +598 260 48439
clorda@rewouruguay.com.uy

**UZ Usbekistan**
OOO "Elektro Potential"
Gani Mavljanova str., 2B
100084 Tashkent
Phone +998 98-3003821
Fax +998 71-1249286
mz1958@yandex.ru

**VE Venezuela**
Somerinca C.A.
Quinta Sagrado Corazon
de Jesus -
3ra Transversal -
Los Dos Caminos,
Caracas 1070 - A
Phone +58 212 2352748
Fax +58 212 2399341
klocmoeller@cantv.net
www.kmsomerinca.com.ve

**VN Vietnam**
AUMI Co., Ltd
E1, La Thanh Hotel,
218 Doi Can Street,
Lieu Giai Ward, Ba Dinh District,
Hanoi City
Phone +84 4762 8601
Fax +84 4266 1391
aumi@aumi.com.vn

Linh Kim Hai Co,. Ltd
78 Hoa Cuc Street Ward 7,
Phu Bhuan District,
Ho Chi Minh City
Phone +84 8517 1717
Fax +84 8517 1818
lkh@linhkimhai.com.vn

**ZA South Africa**
Phambili Interface (Pty) Ltd
P.O. Box 193,
1609 Johannesburg
5 Bundo Road, Sebenza
1610 Johannesburg,
Endenvale
Phone +27 11 452 1930
Fax +27 11 452 6455
sales@radinterface.co.za
www.radinterface.co.za

**DE Other countries**
Weidmüller Interface GmbH
& Co. KG
Postfach 3030
32720 Detmold
Klingenbergstraße 16
32758 Detmold
Phone +49 5231 14-0
Fax +49 5231 14-292083
info@weidmueller.de
www.weidmueller.com

We cannot guarantee that there are no mistakes in the publications or software provided by us to the customer for the purpose of making orders. We try our best to quickly correct errors in our printed media.

All orders are based on our general terms of delivery, which can be reviewed on the websites of our group companies where you place your order. On demand we can also send the general terms of delivery to you.

**Weidmüller – Partner in Industrial Connectivity**

As experienced experts we support our customers and partners around the world with products, solutions and services in the industrial environment of power, signal and data. We are at home in their industries and markets and know the technological challenges of tomorrow. We are therefore continuously developing innovative, sustainable and useful solutions for their individual needs. Together we set standards in Industrial Connectivity.

Weidmüller Interface GmbH & Co. KG
Klingenbergstraße 16
32758 Detmold, Germany
T +49 5231 14-0
F +49 5231 14-292083
info@weidmueller.com
www.weidmueller.com

4 050118 168051

Order number: 1366750000/11/2012/SMDM

# X-ON Electronics

Largest Supplier of Electrical and Electronic Components

***Click to view similar products for*** Weidmuller ***manufacturer:***

Other Similar products are found below :

8924550000 56956 0133660000 6720000227 6720005111 68676 69718 EXO24CH 7940000218 8005181001 8008180000 8432240000 8463580000 8545830000 8689870000 8705640000 8869870000 9001080000 9003720000 9004250000 9004780000 9008380000 9013260000 9014100000 9019040000 9025430000 9026010000 9028630000 9032010000 903708 9037350000 9046290000 9046380000 9129643500 913155 9159530000 919656 919764 9202230000 9202850000 9203710000 9204640000 9456750000 9457913000 980811 980826 9912800003 9916280012 9918380000 9919371205