Sensor-Actuator Interfaces and Cables, Round Plugs and IP 67 Remote-I/O Systems

Catalogue 2013/2014

Signal and Power Transmission

Weidmüller

The World of Industrial Connectivity

As experienced experts we support our customers and partners around the world with products, solutions and services in the industrial environment of power, signal and data. Immerse yourself in our world of Industrial Connectivity.
Let's connect.

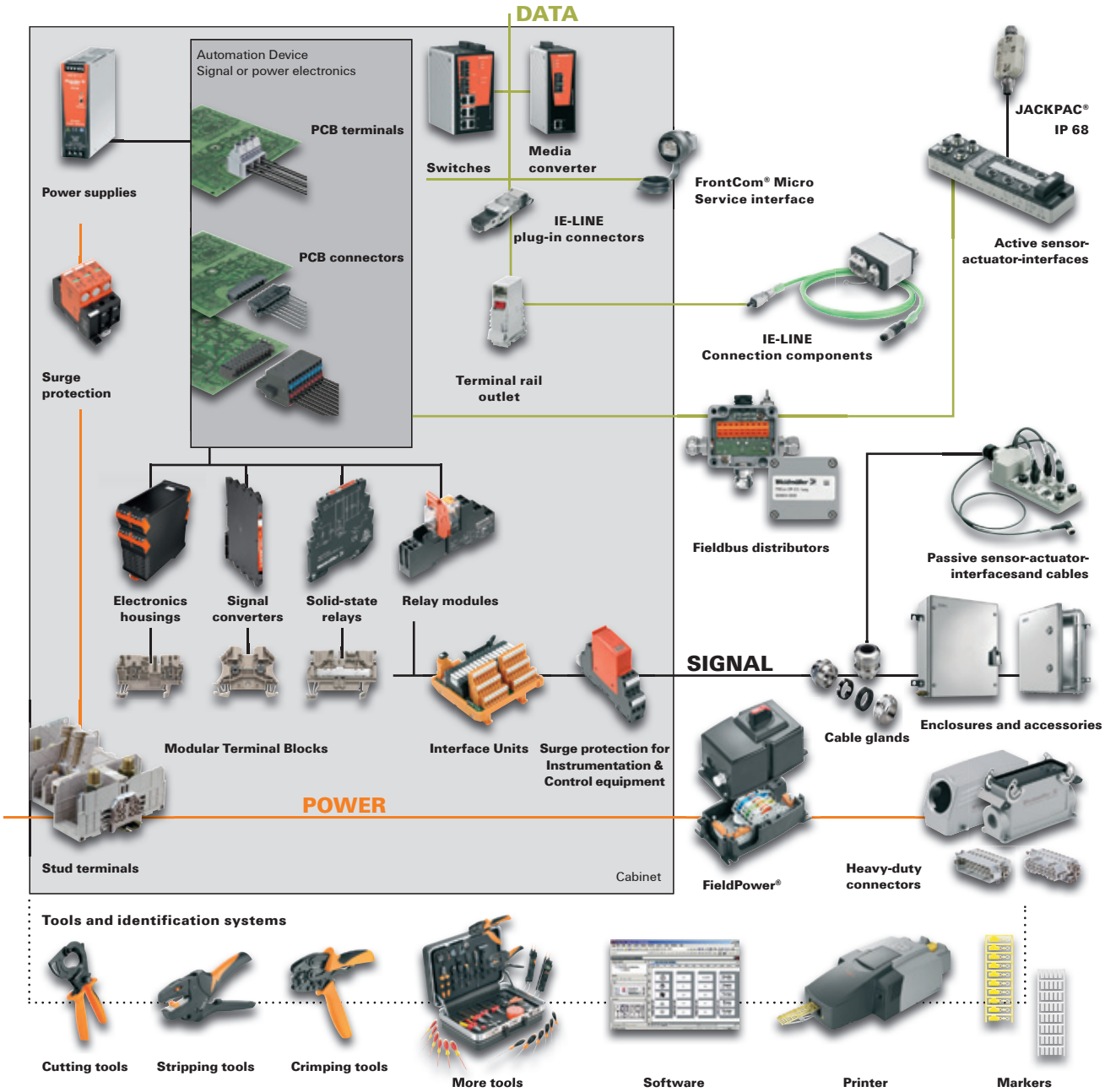

Dear Customers,

The PDF versions of our catalogues offer practical additional functions, helping you to find your way around our product range and simplifying the ordering process.

In addition to the catalogue, the PDF also contains:

- Internal page links
- Links to the online catalogue

Try it out for yourself. Click the order number to obtain more detailed information and close-up images via you web browser. The links in the PDF file also enable you to go directly to the next desired catalogue page.

Further Weidmüller product catalogues can be accessed by clicking the following:

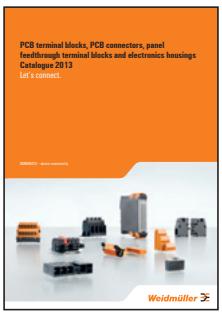

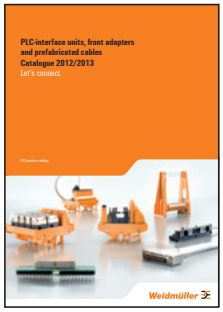

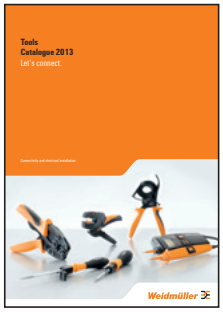

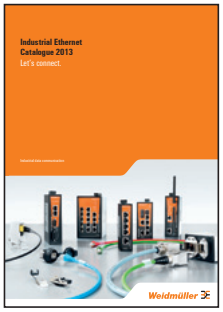

Sensor-Actuator Interfaces and Cables, Round Plugs and IP 67 Remote-I/O Systems
Catalogue 8

Sensor-Actuator Interfaces and Cables, Round Plugs and IP 67 Remote-I/O Systems

Sensor Actuator Interface

M8, M12 Sensor and actuator cables

M8, M12 Fieldbus, data cables and accessories

M8, M12 Plug in connectors and protective caps

7/8" connectors

IP 67 Remote I/O system SAI Active

SAI empty housing

JACKPAC® (IP 67)

Passive distributors

M23 Connectors and cables

Tools and markers

Appendix

Technical appendix

Index

Search according to type or order number
Addresses worldwide

M8, M12 Sensor and actuator cables

M12 one end without connector
Page B.11

M12 one end without connector, shielded
Page B.17

Twin cabling M12 one end without connector
Page B.18

M8 one end without connector
Page B.19

M5 one end without connector
Page B.23

Connecting cables M12 to M12
Page B.25

Connecting cables M12 to M12
Page B.26

Connecting cables M12 to M8
Page B.29

Connecting cables M8 to M8
Page B.32

Twin sensor cables
Page B.37

M12 one end without connector, B-coded
Page B.43

Valve cables one-sided
Page B.50

Valve M12
Page B.56

M8, M12 Fieldbus, data cables and accessories

PROFIBUS-DP - cables Page C.6

PROFIBUS-DP - plug-in connector (M12, Sub-D) Page C.10

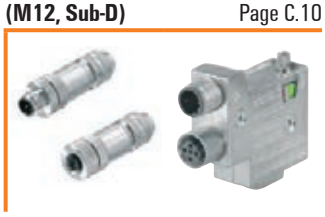

PROFIBUS-DP - FBCon T-distributor Page C.22

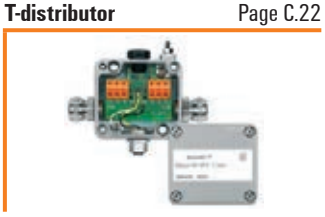

PROFIBUS-PA - cables Page C.28

PROFIBUS-PA - plug-in connector Page C.31

PROFIBUS-PA - FBCon T-distributor Page C.34

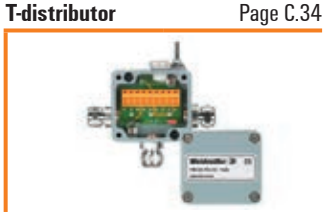

PROFIBUS-PA - FBCon T-distributor with surge protection Page C.40

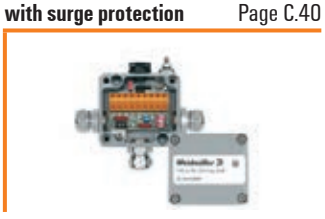

PROFIBUS-PA - FBCon T-distributor ATEX Ex(ia) Page C.50

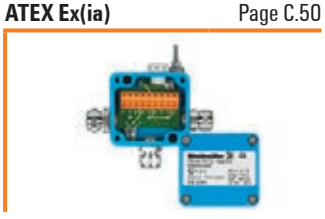

ASI - SAI distributor Page C.59

ASI - Cables Page C.60

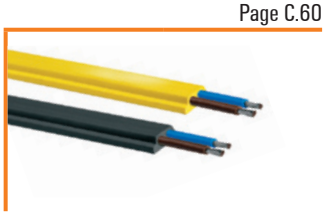

ASI - T-piece Page C.61

CANopen & DeviceNet™ - cables (M12, M8) Page C.62

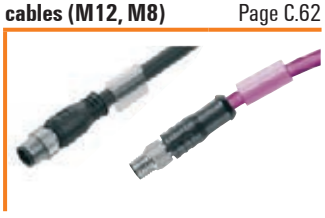

CANopen & DeviceNet™ - connectors Page C.67

EtherCAT Page C.68

Ethernet - cables Page C.69

Ethernet - plug-in connector Page C.77

FOUNDATION Fieldbus - connector (7/8") Page C.80

Accessories cable glands Page C.81

M8, M12 Plug in connector and protective caps

Customisable connectors
M12 Page D.7

Customisable connectors
M8 Page D.20

Insulation displacement connection
M12 Page D.24

Insulation displacement connection
M8 Page D.26

Y-distributor
Page D.28

Twin plugs and wall bushings
Page D.30

Protective caps
Page D.31

Built in plugs
M12 Page D.33

Built in plugs
M8/M5 Page D.35

Valve plugs for custom assembly
Page D.40

Protective sleeve adapter
Page D.42

7/8" connector

7/8" connector
Page E.6

7/8" built-in plug
Page E.8

7/8" one end without connector
Page E.11

IP 67 Remote I/O system SAI Active

SAI-AU for PROFIBUS-DP
Page F.8

SAI-AU for CANopen
Page F.12

SAI-AU for DeviceNet™
Page F.16

SAI-AU Pro Gateway for PROFIBUS-DP
Page F.22

SAI-AU Pro Gateway for DeviceNet™
Page F.24

SAI-AU Pro Gateway for Modbus ASCII
Page F.26

SAI-AU Pro subbus modules with digital inputs/outputs
Page F.28

SAI-AU Pro subbus modules with analogue input/outputs
Page F.29

SAI-AU Pro subbus modules "counter"
Page F.30

SAI-AU Pro subbus modules "thermo"
Page F.31

SAI-AU Pro subbus module "PT100"
Page F.32

SAI-AU Wireless for PROFIBUS-DP
Page F.36

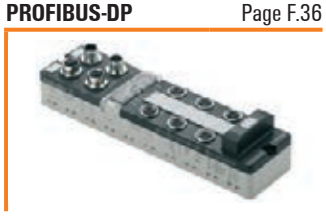

SAI empty housing

SAI empty housing

Page G.8

JACKPAC® (IP 67)

JACKPAC®

Page H.3

JACKPAC® test

Page H.6

Empty housing SAI JACKPAC®

Page H.8

Passive distributors

M12
Page I.8

M12 Line
Page I.11

M12 DIP with DIP-switch
Page I.14

M12 ECO
Page I.16

M12 Push-Pull
Page I.18

M12 CNOMO
Page I.23

M12 bayonet joint
Page I.24

M12 IDC
Page I.26

M12 VA stainless steel
Page I.30

M12 metal distributors
Page I.32

M12 distributors 1:1
Page I.38

M12 distributors, 8-pole
Page I.39

M12 for NPN and PNP sensors
Page I.40

M12 wall bushing
Page I.41

M12 Pre-assembled hood version
Page I.44

M8
Page I.48

M8 Line
Page I.52

M8 distributor with solder pins
Page I.53

M5 Line
Page I.58

M12 Ex Zone 1 and Zone 22
Page I.60

M23 Connectors and cables

Housings for signal transmission Page J.12

Built-in connectors for signal transmission Page J.13

Inserts for signal transmission Page J.14

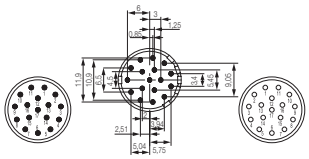

Contacts for signal transmission Page J.16

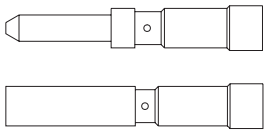

Housings for power transmission Page J.26

Built-in connectors for power transmission Page J.27

Inserts for power transmission Page J.28

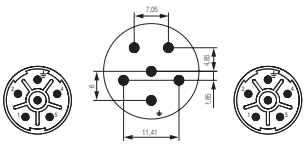

Contacts for power transmission Page J.29

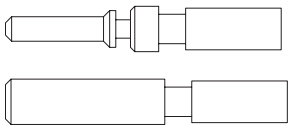

Moulded M23 cables Page J.30

SAI distributor with M23 Page J.31

Tools and markers

Screwty® for M8/M12/M23 Page K.5

Cutting tools Page K.7

Sheathing and insulation stripping tools Page K.8

M23 crimping tools Page K.12

Identification systems Page K.14

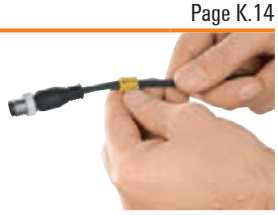

Sensor Actuator Interface

Sensor Actuator Interface Introduction A.2

SAI M12 Line

The thin SAI M12 distributor with a single row linear design can be used in a variety of ways.

Machines are becoming more complex as they integrate new functionality and collect increasing amounts of information. But at the same time, there is less space available for these increasing requirements.

The SAI M12 line of distributors has been designed by Weidmüller to meet the requirements posed by this trend. Our existing SAI M8 line of distributors has been designed to save space while still maintaining their versatility. These features are also found in the new SAI M12 distributor line.

The distributors are versatile because every plug in location can be labelled. Thus they can be mounted from the side or from the top down. They are easy to handle and simple to mount to machine profiles because of their single row design.

The M12 distributors are available as 4-way and 6-way modules, with M12 combi-plugs, or as a fixed cable version.

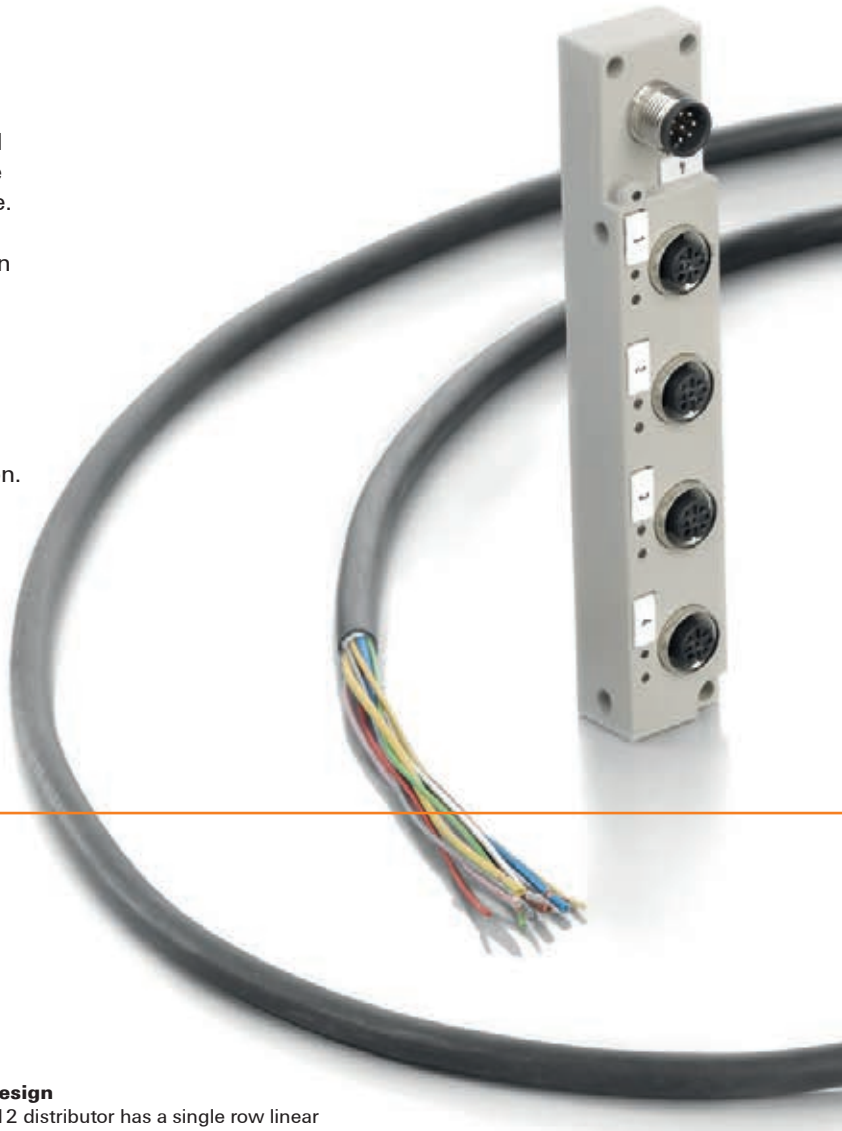

Versatile marking options
All plug in positions of the distributor can be labelled with markers so that all connection points are easily identified.

Thin design
The M12 distributor has a single row linear design which allows it to be handled easily.

The corresponding number of connections
The M12 distributors are available as 4-way and 6-way modules.

Multiple variants
Depending on your application or preference, the M12 distributors can be used either with a fixed, attached cable or with a combi-plug.

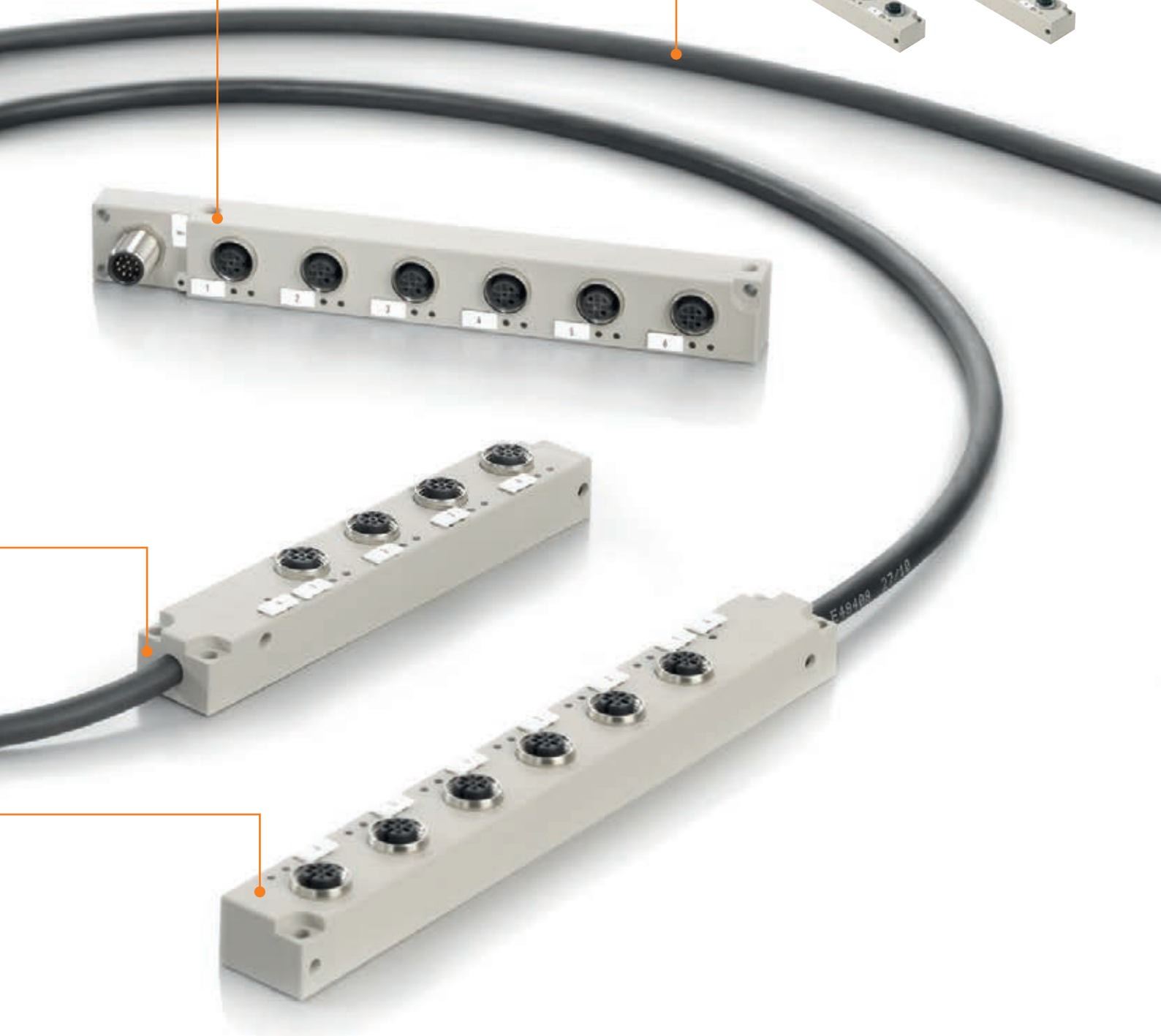

Technical data and ordering data can be found beginning on page I.9

7/8" connectors

Rugged connector solution for supplying power

Weidmüller offers appropriate 7/8" connectors for a variety of different uses. They are available as customisable variants, built-in connectors with front-wall or rear-wall mounting, and as moulded (encapsulated) cables. The contact carriers are designed with 3, 4 or 5 poles. The contacts are gold plated to ensure a long lifespan.

The customisable variants of these products have compact dimensions, yet can still be fitted with a screw wire connection. The 3-pole version is rated for 12 A while the 4- and 5-pole versions are rated for 9 A. One pin is always designated as the PE contact.

The rated voltage is always at least 250 V. These features make the connector perfect for supplying power to devices.

High dielectric strength
A high dielectric strength of at least 250 V is ensured by the wide contact gap. This allows the product to be used as a power supply.

Excellent transmission reliability
The gold-plated contacts and the low insertion force both help to ensure excellent transmission reliability.

Rugged design
Extra rugged, moulded cables are available for series production.

Pluggable and safe device connectivity
Receptacle connectors for front-wall and rear-wall mounting provide you with pluggable device connectivity and IP 67 protection.

Easy to assemble
For easy assembly, the customisable versions can be fitted with the widely used screw wire connection.

D-coded connectors made from stainless steel
The D-coded connectors are made from 1.4404/316L stainless steel and feature a tension-clamp connection. They can be customised and are available with IP 69K protection.

M8 patch cords for EtherCAT applications
The industrial Ethernet cabling systems with M8 connectors are preferred for use with EtherCAT applications.

M23 solder inserts
The M23 solder versions are used for stand-alone soldering or for attaching to circuit boards.

Technical data and ordering data can be found beginning on page E.6

High-quality M8 valve lines

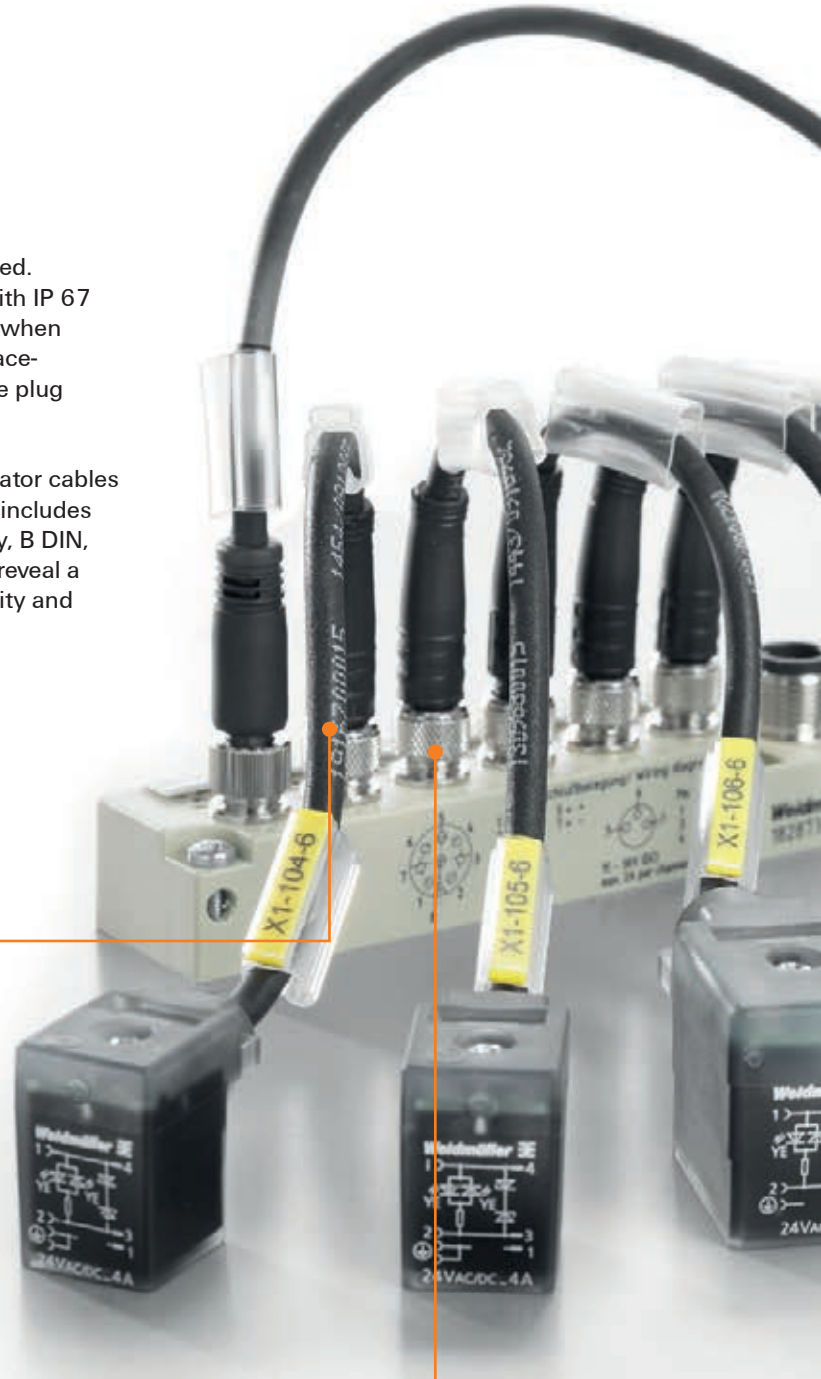

Now with all five valve plug versions

The miniaturisation trend in device design continues unabated. Sub-bus modules are being used increasingly, particularly with IP 67 I/O devices. These should take up as little space as possible when installed in the field. Users are relying more and more on space-saving M8 connectors to minimise the space taken up by the plug connection.

In support of this trend, we are offering the appropriate actuator cables in a variety of application-specific versions. Our product line includes cables with all five valve-connector types: types A, B industry, B DIN, C Industry and C DIN. The specifications for these products reveal a successful balance of space-saving size combined with quality and load resistance.

Flexible lengths
The cables are available in different versions with a minimum length of only 15 cm.

Compact yet durable
The encapsulated moulding of the M8 connector ensures that the connectors are not just compact, but also high-quality and durable.

Injection-moulded valve connectors
High-quality components achieved using state-of-the-art production methods: The moulding around the valve connectors gives them a rugged, high-quality build. A factory test conducted prior to shipment eliminates the risk of assembly errors.

Round plugs for the circuit board
We offer many versions of our round plugs for the circuit board – including straight/angled, male/female, M8/M12, and with A/B/D coding.

M16 connectors
We offer a wide line of M16 connectors for circuit boards and moulded connectors for field cabling.

Shielded built-in round plugs
Circular plugs with lead-out shields for wall installations result in significantly less interference in the device.

Technical data and ordering data can be found beginning on page B.53

SAI empty housing in IP 67
Modular sensor actuator interface, empty housing

The sensor actuator interface (SAI) line of empty housings with IP 67 protection has been designed by Weidmüller without encapsulation so that they are easy to install. Thus the SAI empty housings are well suited for customer specific layouts which they can implement themselves.

The reflow compatible M12 PCB connectors can withstand continuous operating temperatures of up to 105 °C. They can be ordered separately for customer specific housing solutions.

The housing series includes three sizes: a 54 mm wide version and two 30 mm wide versions in a short or a long execution.

The housings are easy to install and production is simplified by the reflow-compatible M12 PCB connectors. They can be installed on the PCB directly from the tray.

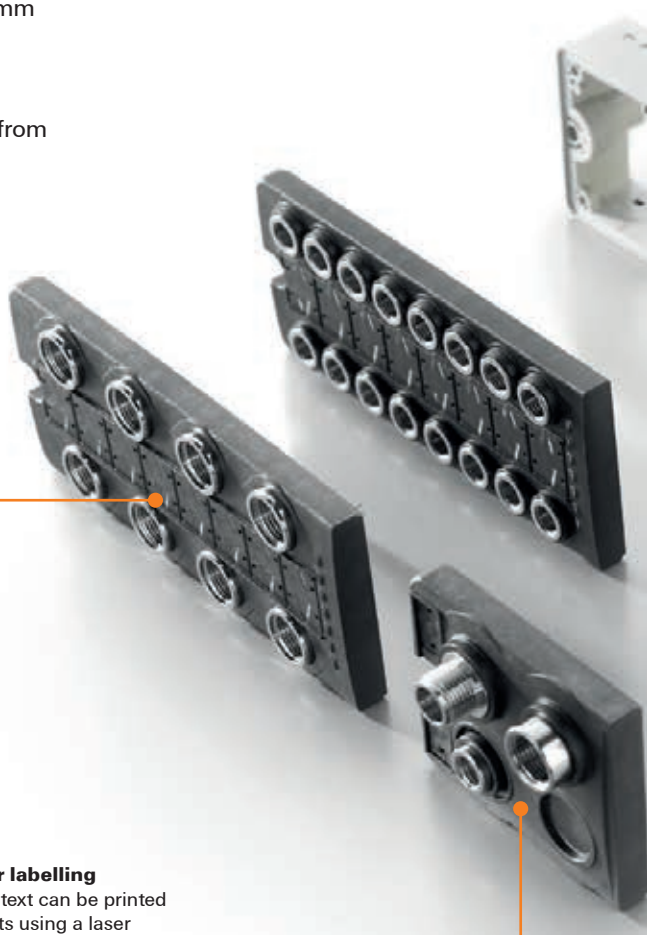

On site diagnostics
Illuminated arrow icons show the user the status of each.

Designer option for laser labelling
Symbols, data, diagrams or text can be printed in detail on the housing parts using a laser labelling process.

Easy to service during installation
Installation with snap on lugs enables simple and quick trouble shooting during application; this is only possible without encapsulation.

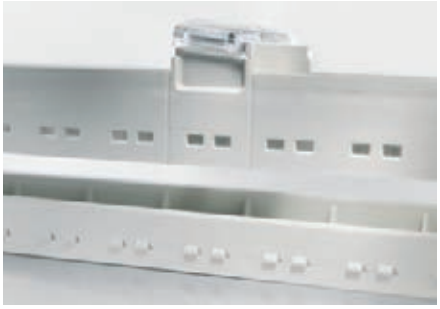

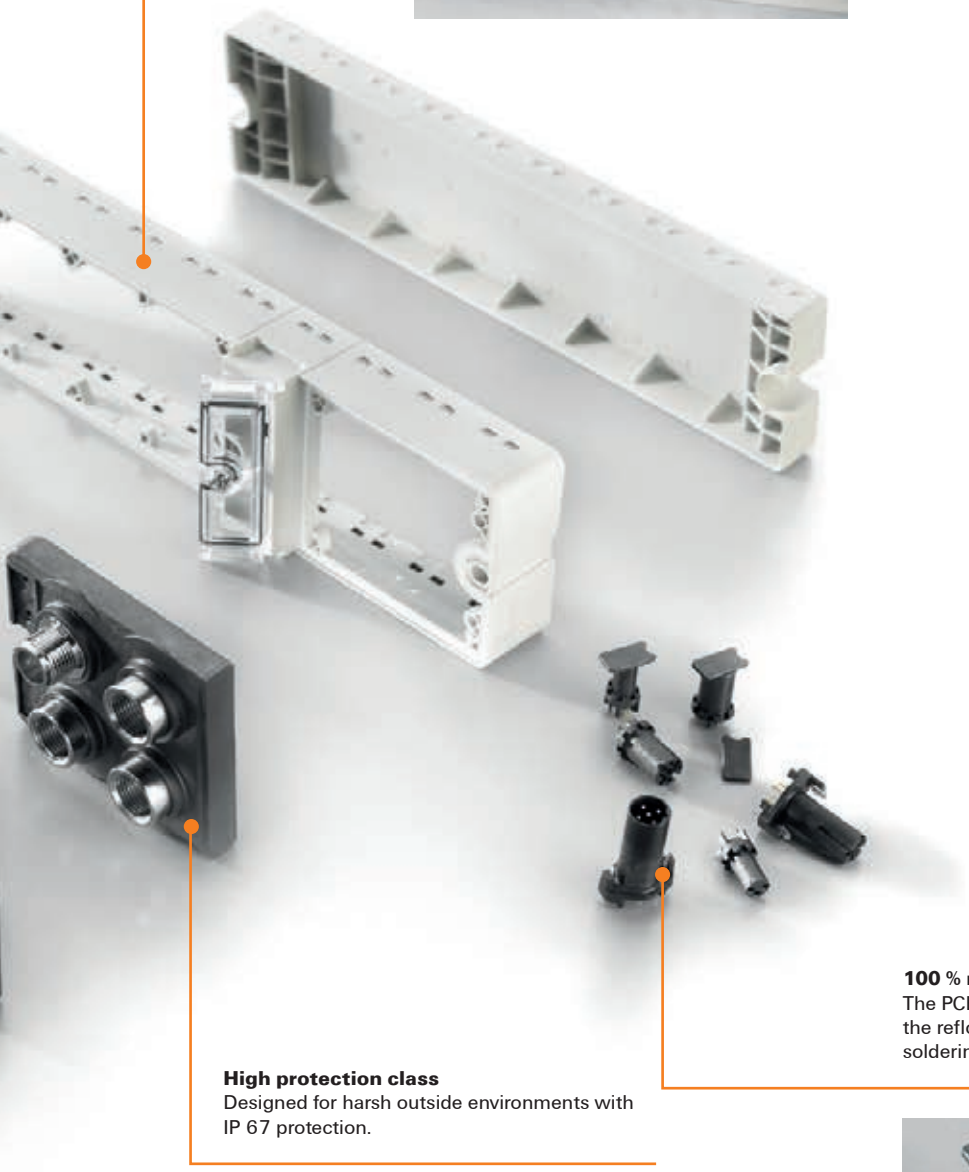

Power reserve for safety
Due to the use of Pocan® insulating plastic, the SAI empty housings are especially sturdy and resistant.

Wide variety of variants
The M12 PCB connectors are available as A-coded, B-coded and also D-coded versions.

100 % reflow-compatible
The PCB connectors fulfil the high demands on the reflow process and are suitable for all other soldering processes.

High protection class
Designed for harsh outside environments with IP 67 protection.

IP 67

Technical data and ordering data can be found beginning on page G.6

Are you already a Weidmüller customer?

Then why not order your M12 or M8 cables from us!

Weidmüller supplies an extremely wide range of M12 and M8 cables, naturally with our proven Weidmüller quality assurance.

To answer as many demands as possible, we offer:

- PVC cables
- PUR/halogen-free cables

Of course, with very short delivery times and best conditions. Please do not hesitate to contacts us for a quote or to receive further information.

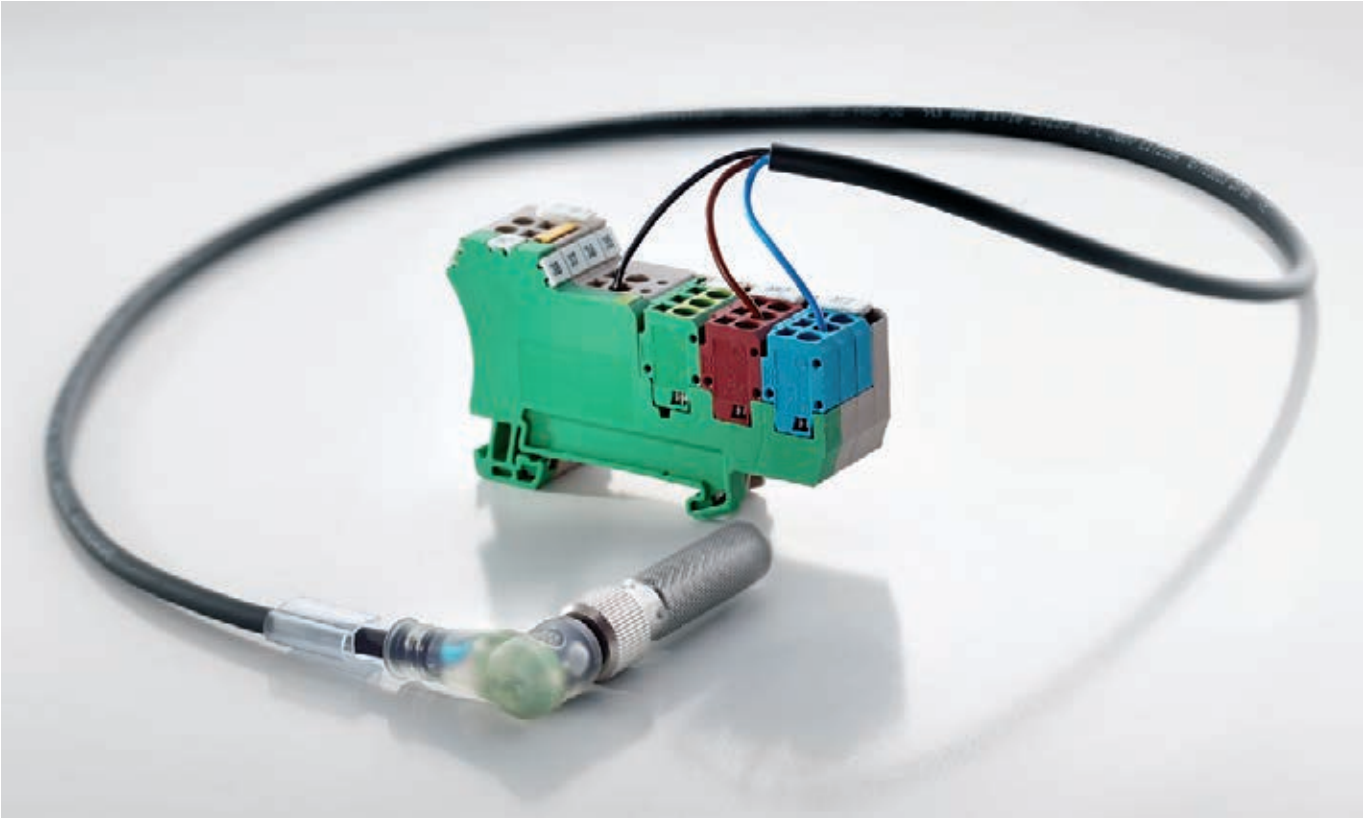

M8, M12 Sensor and actuator cables

M8, M12 Sensor and actuator cables	Introduction	B.2
	Overview of sensor cables	B.4
	Sensor cables	B.10
	Power cables	B.42
	Valve cables	B.46
	Connecting cable for sensors and actuators	B.56
	Connecting cables for Weidmüller distributors	B.57

SAI cable

Weidmüller manufacturers its own SAI cable. This ensures optimal versatility. We do not use fully automatic machines which are difficult to adapt. That is why Weidmüller is well known for delivering promptly with quick turnaround times, despite our wide variety of available options. We can also develop and produce solutions for specific customer requirements. We regularly produce cables, for example, with customer specific labels and logos.

We realise that the cost of having this increased flexibility can be the decisive factor. In order to meet your cost requirements, an additional production line has been specifically designed to keep costs down. This line produces top-selling products for exceptional efficiency and cost savings.

Sensor cables from Weidmüller: shown here with yellow and black cables, together with bus cables

Easy to identify

The EAN number on each label can be scanned in.

Resistant to vibration

M8 with vibration resistance

High quality

Compatible for use in robots;
with recyclable, halogen-free cables

Versatile

Customised cables

One end without connector

Connecting cables

Valve cables

Connection cables / bus cables

Overview of sensor cables

					One end free		M8 socket straight	
			No. of poles				4(S) 3(-) 1(+)	
				Cable material	PUR halogen-free	PVC	PUR halogen-free	PVC
One end free				1.5 m			9457450150	1927240150
				3.0 m			9457450300	1927240300
				5.0 m			9457450500	1927240500
				10.0 m			9457451000	1927241000
				variable			9457450000	1927240000
M8 plug	straight		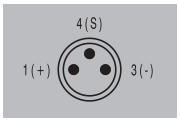	1.5 m	1824590150	1927230150	1824570150	1927150150
				3.0 m	1824590300	1927230300	1824570300	1927150300
				5.0 m	1824590500	1927230500	1824570500	1927150500
				10.0 m	1824591000	1927231000	1824571000	1927151000
				variable	1824590000	1927230000	1824570000	1927150000
			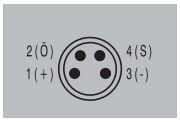	1.5 m	1906270150	1927250150	***	***
				3.0 m	1906270300	1927250300		
				5.0 m	1906270500	1927250500		
				10.0 m	1906271000	1927251000		
				variable	1906270000	1927250000		
	90°		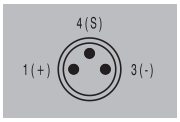	1.5 m	1857550150	1927310150	On request	On request
				3.0 m	1857550300	1927310300		
				5.0 m	1857550500	1927310500		
				10.0 m	1857551000	1927311000		
				variable	1857550000	1927310000		
			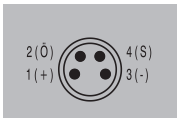	1.5 m	1857560150	1927330150	***	***
				3.0 m	1857560300	1927330300		
				5.0 m	1857560500	1927330500		
				10.0 m	1857561000	1927331000		
				variable	1857560000	1927330000		
M12 plug	straight		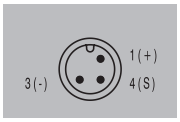	1.5 m	9457810150	1925430150	9457770150	1938170150
				3.0 m	9457810300	1925430300	9457770300	1938170300
				5.0 m	9457810500	1925430500	9457770500	1938170500
				10.0 m	9457811000	1925431000	9457771000	1938171000
				variable	9457810000	1925430000	9457770000	1938170000
			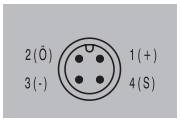	1.5 m	9456100150	1925440150	***	***
				3.0 m	9456100300	1925440300		
				5.0 m	9456100500	1925440500		
				10.0 m	9456101000	1925441000		
				variable	9456100000	1925440000		
			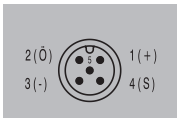	1.5 m	9457610150	1925450150	***	***
				3.0 m	9457610300	1925450300		
				5.0 m	9457610500	1925450500		
				10.0 m	9457611000	1925451000		
				variable	9457610000	1925450000		
	90°		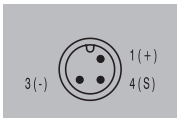	1.5 m	9456690150	1925510150	On request	On request
				3.0 m	9456690300	1925510300		
				5.0 m	9456690500	1925510500		
				10.0 m	9456691000	1925511000		
				variable	9456690000	1925510000		
			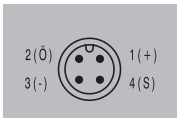	1.5 m	1906260150	1925520150	***	***
				3.0 m	1906260300	1925520300		
				5.0 m	1906260500	1925520500		
				10.0 m	1906261000	1925521000		
				variable	1906260000	1925520000		
			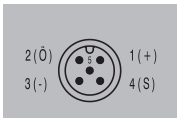	1.5 m	9457670150	1925530150	***	***
				3.0 m	9457670300	1925530300		
				5.0 m	9457670500	1925530500		
				10.0 m	9457671000	1925531000		
				variable	9457670000	1925530000		

Preferred types / extracted from the complete line. Please make a separate enquiry for information about the M8 snap-on version, twin cabling and others.

M8 socket

straight		90°				90° angle with 2 LEDs	
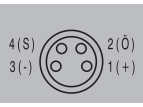		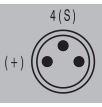		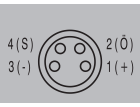		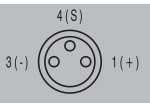	
PUR halogen-free	PVC	PUR halogen-free	PVC	PUR halogen-free	PVC	PUR halogen-free	PVC
9457850150	1927260150	9457380150	1927320150	9456150150	1927340150	9457460150	1927350150
9457850300	1927260300	9457380300	1927320300	9456150300	1927340300	9457460300	1927350300
9457850500	1927260500	9457380500	1927320500	9456150500	1927340500	9457460500	1927350500
9457851000	1927261000	9457381000	1927321000	9456151000	1927341000	9457461000	1927351000
	1927260000	9457380000	1927320000	9456150000	1927340000	9457460000	1927350000
***	***	1824580150	1927170150	***	***	1877250150	1927190150
		1824580300	1927170300			1877250300	1927190300
		1824580500	1927170500			1877250500	1927190500
		1824581000	1927171000			1877251000	1927191000
		1824580000	1927170000			1877250000	1927190000
1880470150	1927160150	***	***	1857660150	1927180150	***	***
1880470300	1927160300			1857660300	1927180300		
1880470500	1927160500			1857660500	1927180500		
1880471000	1927161000			1857661000	1927181000		
1880470000	1927160000			1857660000	1927180000		
***	***	1857670150	1927210150	***	***	On request	On request
		1857670300	1927210300				
		1857670500	1927210500				
		1857671000	1927211000				
		1857670000	1927210000				
On request	On request	***	***	1857680150	1927220150	***	***
				1857680300	1927220300		
				1857680500	1927220500		
				1857681000	1927221000		
				1857680000	1927220000		
***	***	9457980150	1938180150	***	***	9457760150	***
		9457980300	1938180300			9457760300	
		9457980500	1938180500			9457760500	
		9457981000	1938181000			9457761000	
		9457980000	1938180000			9457760000	
9456660150	1938200150	***	***	9456670150	1938210150	***	***
9456660300	1938200300			9456670300	1938210300		
9456660500	1938200500			9456670500	1938210500		
9456661000	1938201000			9456671000	1938211000		
9456660000	1938200000			9456670000	1938210000		
***	***	***	***	***	***	***	***
***	***	1906330150	1938190150	***	***	***	***
		1906330300	1938190300				
		1906330500	1938190500				
		1906331000	1938191000				
		1906330000	1938190000				
On request	On request	***	***	1906340150	1938220150	***	***
				1906340300	1938220300		
				1906340500	1938220500		
				1906341000	1938221000		
				1906340000	1938220000		
***	***	***	***	***	***	***	***

Overview of sensor cables

		No. of poles	Cable material	M12 socket straight			
				1(+) 4(S) 3(-)		1(+) 4(S) 2(Ō) 3(-)	
				PUR halogen-free	PVC	PUR halogen-free	PVC
One end free			1.5 m	9457820150	1925570150	9457730150	1925580150
			3.0 m	9457820300	1925570300	9457730300	1925580300
			5.0 m	9457820500	1925570500	9457730500	1925580500
			10.0 m	9457821000	1925571000	9457731000	1925581000
			variable	9457820000	1925570000	9457730000	1925580000
M8 plug	straight	4(S) 1(+) 3(-)	1.5 m	1937950150	1938230150	***	***
			3.0 m	1937950300	1938230300		
			5.0 m	1937950500	1938230500		
			10.0 m	1937951000	1938231000		
			variable	1937950000	1938230000		
		2(Ō) 1(+) 4(S) 3(-)	1.5 m	***	***	1937980150	1938260150
			3.0 m			1937980300	1938260300
			5.0 m			1937980500	1938260500
			10.0 m			1937981000	1938261000
			variable			1937980000	1938260000
	90°	4(S) 1(+) 3(-)	1.5 m	On request	On request	***	***
			3.0 m				
			5.0 m				
			10.0 m				
			variable				
		2(Ō) 1(+) 4(S) 3(-)	1.5 m	***	***	On request	On request
			3.0 m				
			5.0 m				
			10.0 m				
			variable				
M12 plug	straight	3(-) 1(+) 4(S)	1.5 m	9457230150	1925300150	***	***
			3.0 m	9457230300	1925300300		
			5.0 m	9457230500	1925300500		
			10.0 m	9457231000	1925301000		
			variable	9457230000	1925300000		
		2(Ō) 3(-) 1(+) 4(S)	1.5 m	***	***	1906300150	1925310150
			3.0 m			1906300300	1925310300
			5.0 m			1906300500	1925310500
			10.0 m			1906301000	1925311000
			variable			1906300000	1925310000
		2(Ō) 3(-) 1(+) 4(S)	1.5 m	***	***	***	***
			3.0 m				
			5.0 m				
			10.0 m				
			variable				
	90°	3(-) 1(+) 4(S)	1.5 m	1821050150	On request	***	***
			3.0 m	1821050300			
			5.0 m	1821050500			
			10.0 m	1821051000			
			variable	1821050000			
		2(Ō) 3(-) 1(+) 4(S)	1.5 m	***	***	On request	On request
			3.0 m				
			5.0 m				
			10.0 m				
			variable				
		2(Ō) 3(-) 1(+) 4(S)	1.5 m	***	***	***	***
			3.0 m				
			5.0 m				
			10.0 m				
			variable				

M12 socket

straight		90°					
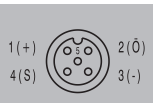		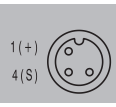		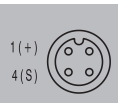		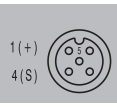	
PUR halogen-free	PVC	PUR halogen-free	PVC	PUR halogen-free	PVC	PUR halogen-free	PVC
9457910150	1925590150	9457320150	1925630150	9457740150	1925640150	9457690150	1925650150
9457910300	1925590300	9457320300	1925630300	9457740300	1925640300	9457690300	1925650300
9457910500	1925590500	9457320500	1925630500	9457740500	1925640500	9457690500	1925650500
9457911000	1925591000	9457321000	1925631000	9457741000	1925641000	9457691000	1925651000
9457910000	1925590000	9457320000	1925630000	9457740000	1925640000	9457690000	1925650000
***	***	1937960150	1938240150	***	***	***	***
		1937960300	1938240300				
		1937960500	1938240500				
		1937961000	1938241000				
		1937960000	1938240000				
***	***	***	***	1937990150	1938270150	***	***
				1937990300	1938270300		
				1937990500	1938270500		
				1937991000	1938271000		
				1937990000	1938270000		
***	***	1937970150	1938250150	***	***	***	***
		1937970300	1938250300				
		1937970500	1938250500				
		1937971000	1938251000				
		1937970000	1938250000				
***	***	***	***	1938000150	1938280150	***	***
				1938000300	1938280300		
				1938000500	1938280500		
				1938001000	1938281000		
				1938000000	1938280000		
***	***	9457390150	1925340150	***	***	***	***
		9457390300	1925340300				
		9457390500	1925340500				
		9457391000	1925341000				
		9457390000	1925340000				
***	***	***	***	9457310150	1925350150	***	***
				9457310300	1925350300		
				9457310500	1925350500		
				9457311000	1925351000		
				9457310000	1925350000		
9457340150	1925320150	***	***	***	***	9457270150	1925360150
9457340300	1925320300					9457270300	1925360300
9457340500	1925320500					9457270500	1925360500
9457341000	1925321000					9457271000	1925361000
9457340000	1925320000					9457270000	1925360000
***	***	1815670150	1925380150	***	***	***	***
		1815670300	1925380300				
		1815670500	1925380500				
		1815671000	1925381000				
		1815670000	1925380000				
***	***	***	***	1906310150	1925390150	***	***
				1906310300	1925390300		
				1906310500	1925390500		
				1906311000	1925391000		
				1906310000	1925390000		
9456500150	On request	***	***	***	***	9457900150	1925400150
9456500300						9457900300	1925400300
9456500500						9457900500	1925400500
9456501000						9457901000	1925401000
9456500000						9457900000	1925400000

Overview of sensor cables

				M12 socket			
				90° angle with 2 LEDs			
		No. of poles		1(+) 4(S) 3(-)		1(+) 4(S) 2(Ô) 3(-)	
			Cable material	PUR halogen-free	PVC	PUR halogen-free	PVC
One end free			1.5 m	9457800150	1925460150	9456380150	1925470150
			3.0 m	9457800300	1925460300	9456380300	1925470300
			5.0 m	9457800500	1925460500	9456380500	1925470500
			10.0 m	9457801000	1925461000	9456381000	1925471000
			variable	9457800000	1925460000	9456380000	1925470000
M8 plug straight		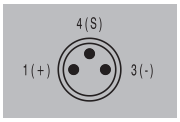	1.5 m	***	***	***	***
			3.0 m				
			5.0 m				
			10.0 m				
			variable				
		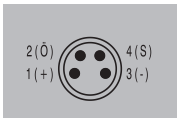	1.5 m	***	***	***	***
			3.0 m				
			5.0 m				
			10.0 m				
			variable				
M8 plug 90°		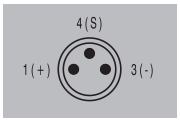	1.5 m	***	***	***	***
			3.0 m				
			5.0 m				
			10.0 m				
			variable				
		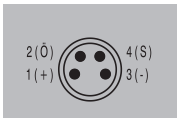	1.5 m	***	***	***	***
			3.0 m				
			5.0 m				
			10.0 m				
			variable				
M12 plug straight		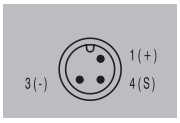	1.5 m	9457790150	1925410150	***	***
			3.0 m	9457790300	1925410300		
			5.0 m	9457790500	1925410500		
			10.0 m	9457791000	1925411000		
			variable	9457790000	1925410000		
		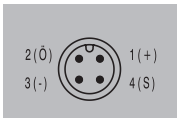	1.5 m	***	***	1906410150	1925420150
			3.0 m			1906410300	1925420300
			5.0 m			1906410500	1925420500
			10.0 m			1906411000	1925421000
			variable			1906410000	1925420000
		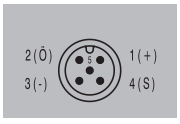	1.5 m	***	***	***	***
			3.0 m				
			5.0 m				
			10.0 m				
			variable				
M12 plug 90°		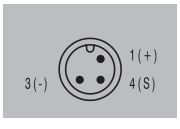	1.5 m	On request	On request	***	***
			3.0 m				
			5.0 m				
			10.0 m				
			variable				
		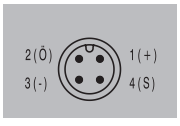	1.5 m	***	***	On request	On request
			3.0 m				
			5.0 m				
			10.0 m				
			variable				
		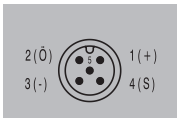	1.5 m	***	***	***	***
			3.0 m				
			5.0 m				
			10.0 m				
			variable				

Sensor cables with plug at one end only

M12

M8

M8 Snap connection

Twin cabling

M5

Sensor/actuator cable pre-assembled with M8/M12 plug-in connector at one end

Machine designers frequently require individual cable lengths. Sensor cables, with a connector fitted at one end only, can be easily adapted to the corresponding situation. The cables are available in many different versions: straight, 90° and with all common pole numbers (3.4 and 5).
Male plugs and Female sockets can be assembled to suit individual customer requirements for connecting cables.
The cable sheathing is of PUR (polyurethane) and is suitable for use with cable carrier systems. Plugs and cables are in neutral black.

Sensor cables

Weidmüller can supply various cable lengths as indicated in the following table:

Typical cable lengths are:

- 1.5 m
- 3.0 m
- 5.0 m
- 10.0 m

Example of designation

Connector at one end only

SAIL-M8 B G R - 3 S 1.5 U

L = Metal nut
P = Plastic nut
V = Stainless steel

M12
M8

not specified = Pin
B= Socket

G = straight
W= 90°

for M8 socket
R = Clip
for M8 pin and M12
not specified

3
4
5
No. poles
A-coded

2/4 bridged
(only with M12B)

PB = Profibus DP
CD = CANBUS/
DeviceNet™

Cable length
1.5 m
3.0 m
5.0 m
10 m
X m

Cable
V = PVC-PVC
U = PUR halogen-free
C = PVC-PVC 0.5 mm²
R = PUR-PVC 0.5 mm²
T = resistant to splatter

– = no options
S = shielded (not with PB/CD)
L = LED (only with M8BW 3 + 4 pol./M12BW 3 pol. + 2/4)
-2L = with 2 LEDs
-3L = with 3 LEDs
-3LW = with 3 LEDs (white LED)
only with M12BW 4 pol.

M12 one end without connector A-coded

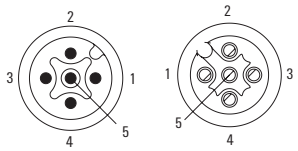

Male Female

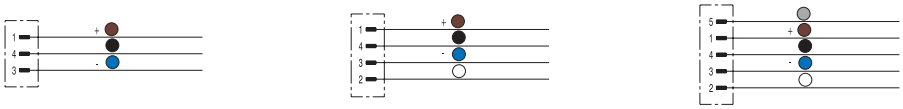

Ordering data

Male, straight		3-pole Type	3-pole Order No.	4-pole Type	4-pole Order No.	5-pole Type	5-pole Order No.
PVC	1.5 m	SAIL-M12G-3-1.5V	1925430150	SAIL-M12G-4-1.5V	1925440150	SAIL-M12G-5-1.5V	1925450150
PUR halogen-free	1.5 m	SAIL-M12G-3-1.5U	9457810150	SAIL-M12G-4-1.5U	9456100150	SAIL-M12G-5-1.5U	9457610150
PUR halogen-free yellow	1.5 m	SAIL-M12G-3-1.5UGE	1092980150	SAIL-M12G-4-1.5UGE	1077750150	SAIL-M12G-5-1.5UGE	1092990150
Resistant to welding beads	1.5 m	SAIL-M12G-3-1.5T	1021750150	SAIL-M12G-4-1.5T	1021770150	SAIL-M12G-5-1.5T	1021650150
Male, angled							
PVC	1.5 m	SAIL-M12W-3-1.5V	1925510150	SAIL-M12W-4-1.5V	1925520150	SAIL-M12W-5-1.5V	1925530150
PUR halogen-free	1.5 m	SAIL-M12W-3-1.5U	9456690150	SAIL-M12W-4-1.5U	1906260150	SAIL-M12W-5-1.5U	9457670150
PUR halogen-free yellow	1.5 m	SAIL-M12W-3-1.5UGE	1093160150	SAIL-M12W-4-1.5UGE	1093170150	SAIL-M12W-5-1.5UGE	1093180150
Resistant to welding beads	1.5 m	SAIL-M12W-3-1.5T	1021760150	SAIL-M12W-4-1.5T	1021790150	SAIL-M12W-5-1.5T	1021660150
Female, straight							
PVC	1.5 m	SAIL-M12BG-3-1.5V	1925570150	SAIL-M12BG-4-1.5V	1925580150	SAIL-M12BG-5-1.5V	1925590150
PUR halogen-free	1.5 m	SAIL-M12BG-3-1.5U	9457820150	SAIL-M12BG-4-1.5U	9457730150	SAIL-M12BG-5-1.5U	9457910150
PUR halogen-free yellow	1.5 m	SAIL-M12BG-3-1.5UGE	1092910150	SAIL-M12BG-4-1.5UGE	1092920150	SAIL-M12BG-5-1.5UGE	1092930150
Resistant to welding beads	1.5 m	SAIL-M12BG-3-1.5T	1968590150	SAIL-M12BG-4-1.5T	1968580150	SAIL-M12BG-5-1.5T	1021670150
Female, angled							
PVC	1.5 m	SAIL-M12BW-3-1.5V	1925630150	SAIL-M12BW-4-1.5V	1925640150	SAIL-M12BW-5-1.5V	1925650150
PUR halogen-free	1.5 m	SAIL-M12BW-3-1.5U	9457320150	SAIL-M12BW-4-1.5U	9457740150	SAIL-M12BW-5-1.5U	9457690150
PUR halogen-free yellow	1.5 m	SAIL-M12BW-3-1.5UGE	1092940150	SAIL-M12BW-4-1.5UGE	1092960150	SAIL-M12BW-5-1.5UGE	1092970150
Resistant to welding beads	1.5 m	SAIL-M12BW-3-1.5T	1968560150	SAIL-M12BW-4-1.5T	1968570150	SAIL-M12BW-5-1.5T	1021690150
Note		Other versions on request		Other versions on request		Other versions on request	

Standard cable lengths

All cables listed under the ordering data have a length of 1.5 metres. The last four ordering digits must be changed when ordering other standard cable lengths.

1.5 m	xxxxxx0150
3.0 m	xxxxxx0300
5.0 m	xxxxxx0500
10.0 m	xxxxxx1000

Technical data

Rated current	4 A
Protection degree	IP 65, IP 66, IP 67, IP 68
Core cross-section	0.34 mm²
Contact surface	Gold-plated
Temperature range of housing	-25...+85 °C
Rated voltage (acc. to VDE standard 0110 ISO group C)	
Approvals	cULus; GOSTME25; ROHS

Chapter W includes additional technical specifications for the cable

Dimensioned drawing

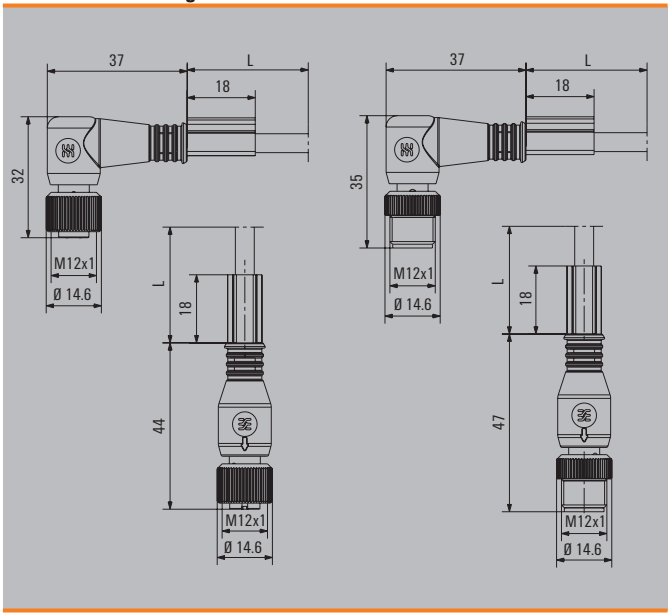

M12 one end without connector
A-coded
with plastic threaded ring

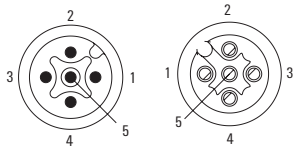

Male Female

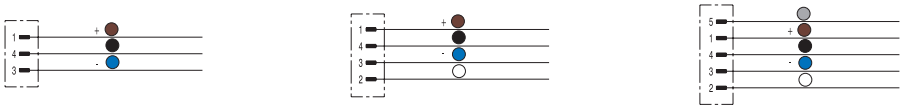

Ordering data

		3-pole	4-pole	5-pole
Male, straight				
PUR halogen-free	1.5 m			
Male, angled				
PUR halogen-free	1.5 m			
Female, straight				
PUR halogen-free	1.5 m			
Female, angled				
PUR halogen-free	1.5 m			
Note				

Type	Order No.	Type	Order No.	Type	Order No.
SAIP-M12G-3-1.5U	1108800150	SAIP-M12G-4-1.5U	1108810150	SAIP-M12G-5-1.5U	1108820150
SAIP-M12W-3-1.5U	1108670150	SAIP-M12W-4-1.5U	1108680150	SAIP-M12W-5-1.5U	1108690150
SAIP-M12BG-3-1.5U	1108730150	SAIP-M12BG-4-1.5U	1108740150	SAIP-M12BG-5-1.5U	1108750150
SAIP-M12BW-3-1.5U	1108770150	SAIP-M12BW-4-1.5U	1108780150	SAIP-M12BW-5-1.5U	1108790150

Standard cable lengths

All cables listed under the ordering data have a length of 1.5 metres. The last four ordering digits must be changed when ordering other standard cable lengths.

1.5 m	xxxxxx0150
3.0 m	xxxxxx0300
5.0 m	xxxxxx0500
10.0 m	xxxxxx1000

Technical data

Rated current	4 A
Protection degree	IP 65, IP 66, IP 67, IP 68
Core cross-section	0.34 mm²
Contact surface	Gold-plated
Temperature range of housing	-25...+85 °C
Rated voltage (acc. to VDE standard 0110 ISO group C)	250 V (3- and 4-pole) / 125 V (5-pole)
Approvals	

Chapter W includes additional technical specifications for the cable

Dimensioned drawing

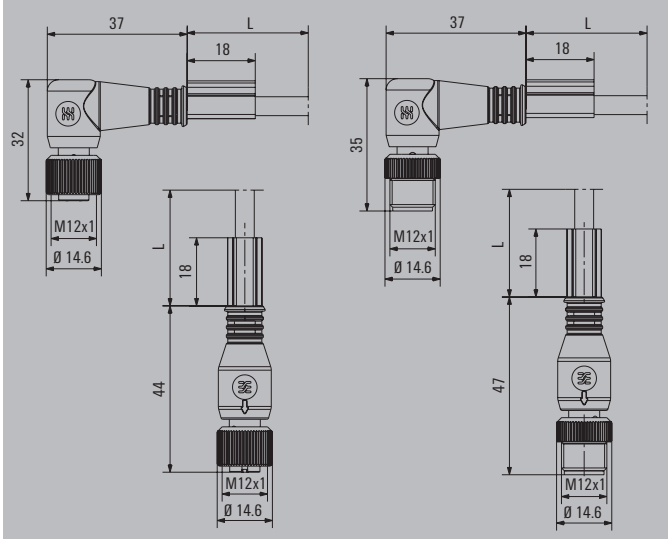

M12 one end without connector
A-coded
with stainless-steel threaded ring
1.4404/316L

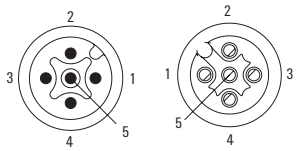

Male Female

Ordering data

Female, straight		3-pole Type	3-pole Order No.	4-pole Type	4-pole Order No.
PUR halogen-free	1.5 m	SAIV-M12BG-2/4-1.5U	1939410150	SAIV-M12BG-4-1.5U	9457950150
Female, angled					
PUR halogen-free	1.5 m	SAIV-M12BW-2/4-1.5U	1939370150	SAIV-M12BW-4-1.5U	9457960150
Note					

Standard cable lengths

All cables listed under the ordering data have a length of 1.5 metres. The last four ordering digits must be changed when ordering other standard cable lengths.

1.5 m	xxxxxx0150
3.0 m	xxxxxx0300
5.0 m	xxxxxx0500
10.0 m	xxxxxx1000

Technical data

Rated current	4 A
Protection degree	IP 65, IP 66, IP 67, IP 68
Core cross-section	0.34 mm²
Contact surface	Gold-plated
Temperature range of housing	-25...+85 °C
Rated voltage (acc. to VDE standard 0110 ISO group C)	250 V
Approvals	

Chapter W includes additional technical specifications for the cable

Dimensioned drawing

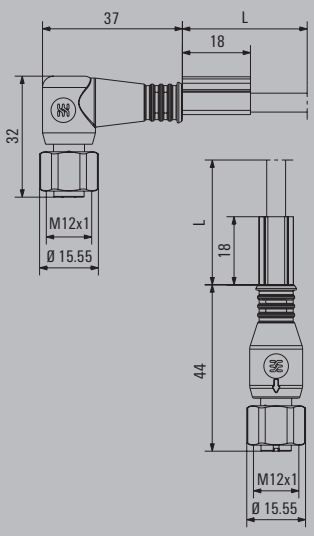

Sensor cables

M12 8 / 12-pole
A-coded

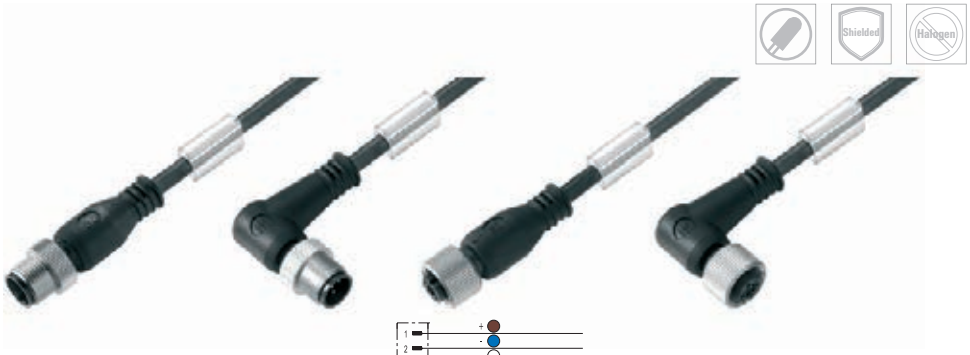

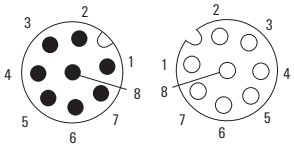

Male Female

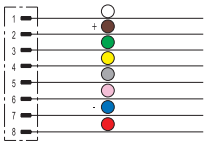

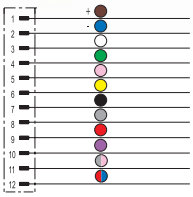

Ordering data

		8-pole	12-pole
Male, straight			
PUR halogen-free	1.5 m	SAIL-M12G-8-1.5U **1279410150**	SAIL-M12G-12-1.5U **1311700150**
Male, angled			
PUR halogen-free	1.5 m	SAIL-M12W-8-1.5U **1279420150**	SAIL-M12W-12-1.5U **1311690150**
Female, straight			
PUR halogen-free	1.5 m	SAIL-M12BG-8-1.5U **1865870150**	SAIL-M12BG-12-1.5U **1879710150**
Female, angled			
PUR halogen-free	1.5 m	SAIL-M12BW-8-1.5U **1883460150**	SAIL-M12BW-12-1.5U **1898240150**
Male, straight - Socket, straight			
PUR halogen-free	1.5 m	SAIL-M12GM12G-8-1.5U **1279440150**	
Male, straight - Socket, angled			
PUR halogen-free	1.5 m	SAIL-M12GM12W-8-1.5U **1279450150**	
Note			

Standard cable lengths

All cables listed under the ordering data have a length of 1.5 metres. The last four ordering digits must be changed when ordering other standard cable lengths.

1.5 m	xxxxxx0150
3.0 m	xxxxxx0300
5.0 m	xxxxxx0500
10.0 m	xxxxxx1000

Technical data

Rated current	1 A
Protection degree	IP 67, IP 68
Core cross-section	0.25 mm²
Contact surface	Gold-plated
Temperature range of housing	-25...+85 °C
Rated voltage (acc. to VDE standard 0110 ISO group C)	30 V
Approvals	

Dimensioned drawing

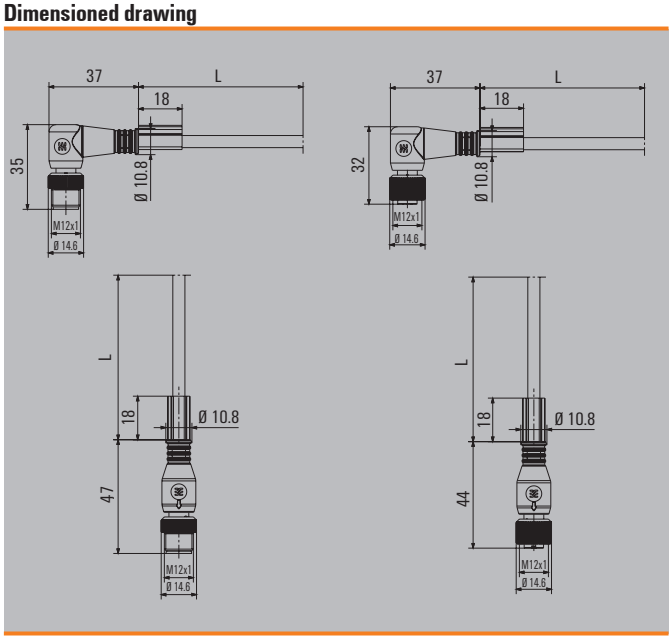

M12 8-pole
A-coded
shielded

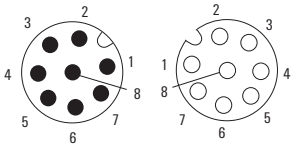

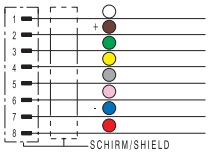

Ordering data

		Type	8-pole Order No.
Male, straight			
PUR halogen-free	1.5 m	SAIL-M12G-8S1.5U	**1279430150**
Male, angled			
PUR halogen-free	1.5 m	SAIL-M12W-8S1.5U	**1276060150**
Female, straight			
PUR halogen-free	1.5 m	SAIL-M12BG-8S1.5U	**1890520150**
Female, angled			
PUR halogen-free	1.5 m	SAIL-M12BW-8S1.5U	**1275470150**
Male, straight - Socket, straight			
PUR halogen-free	1.5 m	SAIL-M12GM12G-8S1.5U	**1279460150**
Male, straight - Socket, angled			
PUR halogen-free	1.5 m	SAIL-M12GM12W-8S1.5U	**1279470150**
Note			

Standard cable lengths

All cables listed under the ordering data have a length of 1.5 metres. The last four ordering digits must be changed when ordering other standard cable lengths.

1.5 m	xxxxxx0150
3.0 m	xxxxxx0300
5.0 m	xxxxxx0500
10.0 m	xxxxxx1000

Technical data

Rated current	1 A
Protection degree	IP 67
Core cross-section	0.25 mm²
Contact surface	Gold-plated
Temperature range of housing	-25...+85 °C
Rated voltage (acc. to VDE standard 0110 ISO group C)	30 V
Approvals	

Dimensioned drawing

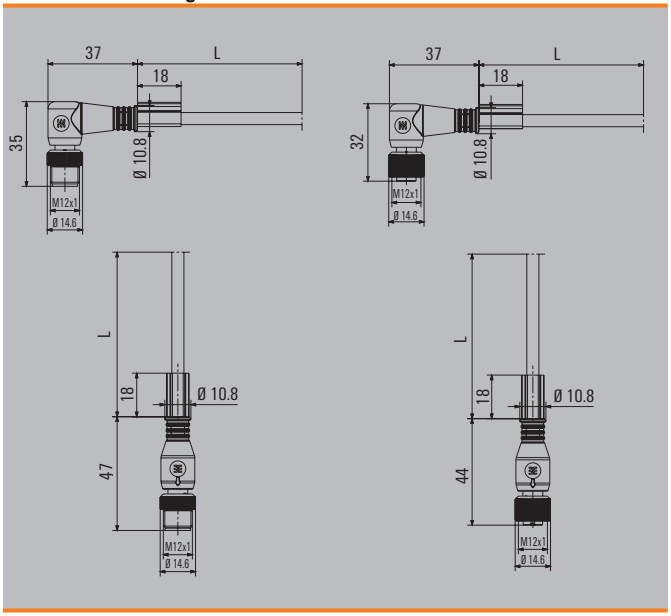

M12 one end without connector with LED A-coded female, angled

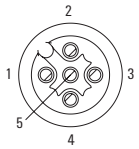

Female

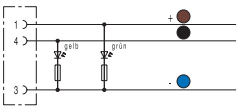

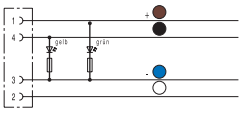

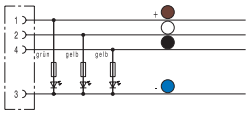

Ordering data

Female, angled	
PVC	1.5 m
PUR halogen-free	1.5 m
PUR halogen-free yellow	1.5 m
Resistant to welding beads	1.5 m
Note	

2 LEDs	3-pole
Type	**Order No.**
SAIL-M12BW-3L1.5V	1925460150
SAIL-M12BW-3L1.5U	9457800150
SAIL-M12BW-3L1.5UGE	1114880150
SAIL-M12BW-3L1.5T	1004330150

2 LEDs	4-pole
Type	**Order No.**
SAIL-M12BW-4-2L1.5V	1925470150
SAIL-M12BW-4-2L1.5U	9456380150
SAIL-M12BW-4-2L1.5UGE	1092950150
SAIL-M12BW-4-2L1.5T	1007000150

3 LEDs	4-pole
Type	**Order No.**
SAIL-M12BW-4-3L1.5V	1963960150
SAIL-M12BW-4-3L1.5U	1963940150
Other versions on request	

Standard cable lengths

All cables listed under the ordering data have a length of 1.5 metres. The last four ordering digits must be changed when ordering other standard cable lengths.	1.5 m	xxxxxx0150
	3.0 m	xxxxxx0300
	5.0 m	xxxxxx0500
	10.0 m	xxxxxx1000

Technical data

Rated current	4 A
Protection degree	IP 65, IP 66, IP 67, IP 68
Core cross-section	0.34 mm²
Contact surface	Gold-plated
Temperature range of housing	-25...+85 °C
Rated voltage (acc. to VDE standard 0110 ISO group C)	250 V (3- and 4-pole) / 125 V (5-pole)
Approvals	CSA; cURus; GOSTME25; ROHS

Chapter W includes additional technical specifications for the cable

Dimensioned drawing

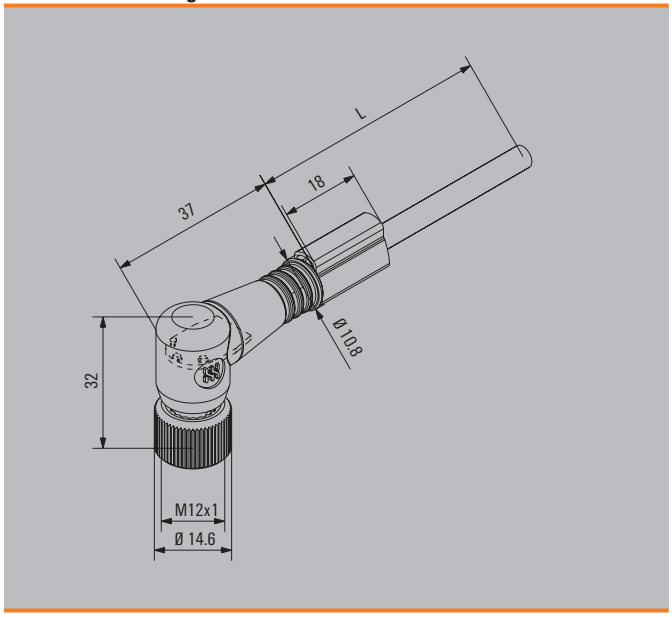

M12 one end without connector shielded A-coded

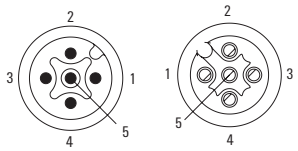

Male Female

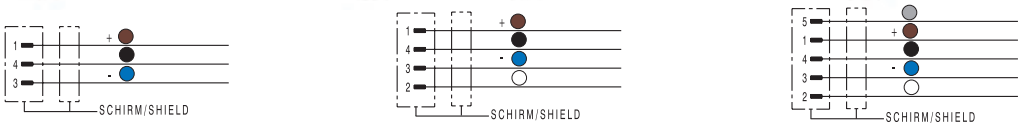

Ordering data

		3-pole	4-pole	5-pole
Male, straight				
PUR halogen-free	1.5 m	SAIL-M12G-3S1.5U **1906470150**	SAIL-M12G-4S1.5U **1906480150**	SAIL-M12G-5S1.5U **1926690150**
Male, angled				
PUR halogen-free	1.5 m	SAIL-M12W-3S1.5U **1906500150**	SAIL-M12W-4S1.5U **1059650150**	SAIL-M12W-5S1.5U **1906520150**
Female, straight				
PUR halogen-free	1.5 m	SAIL-M12BG-3S1.5U **1867410150**	SAIL-M12BG-4S1.5U **1812540150**	SAIL-M12BG-5S1.5U **9456140150**
Female, angled				
PUR halogen-free	1.5 m	SAIL-M12BW-3S1.5U **1906950150**	SAIL-M12BW-4S1.5U **1808970150**	SAIL-M12BW-5S1.5U **1906540150**
Note		Other versions on request	Other versions on request	Other versions on request

Standard cable lengths

All cables listed under the ordering data have a length of 1.5 metres. The last four ordering digits must be changed when ordering other standard cable lengths.

1.5 m	xxxxxx0150
3.0 m	xxxxxx0300
5.0 m	xxxxxx0500
10.0 m	xxxxxx1000

Technical data

Rated current	4 A
Protection degree	IP 67
Core cross-section	mm²
Contact surface	Gold-plated
Temperature range of housing	-25...+85 °C
Rated voltage (acc. to VDE standard 0110 ISO group C)	250 V (3- and 4-pole) / 125 V (5-pole)
Approvals	cULus; GOSTME25; ROHS

Chapter W includes additional technical specifications for the cable

Dimensioned drawing

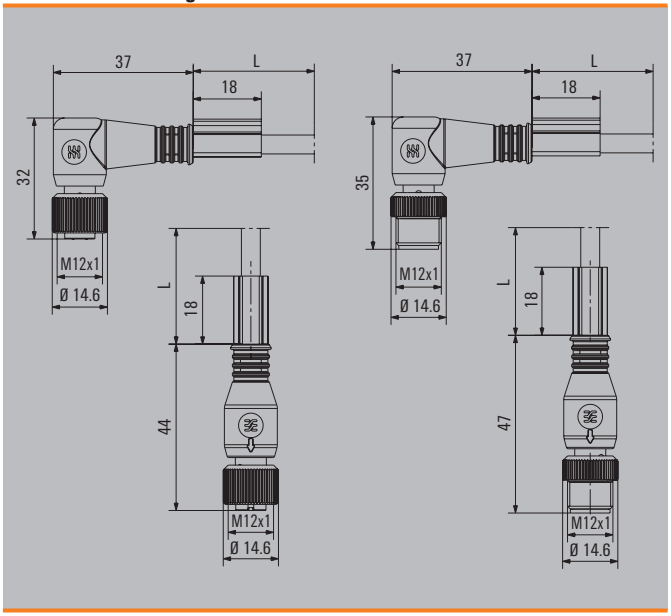

Sensor cables

Twin cabling
M12 one end without connector

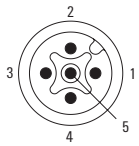

Male

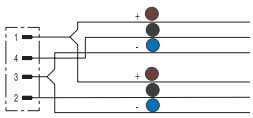

Ordering data

Male straight - open ended		3-pole	
PUR halogen-free	1.5 m	Type	Order No.
Note		SAIL-ZW-3-1.5U	1964310150

Standard cable lengths

All cables listed under the ordering data have a length of 1.5 metres. The last four ordering digits must be changed when ordering other standard cable lengths.	1.5 m	xxxxxx0150
	3.0 m	xxxxxx0300
	5.0 m	xxxxxx0500
	10.0 m	xxxxxx1000

Technical data

Rated current	4 A
Protection degree	IP 65, IP 66, IP 67, IP 68
Core cross-section	0.34 mm²
Contact surface	Gold-plated
Temperature range of housing	-25...+85 °C
Rated voltage (acc. to VDE standard 0110 ISO group C)	250 V (3- and 4-pole) / 125 V (5-pole)
Approvals	CSA; cURus; GOSTME25; ROHS

Chapter W includes additional technical specifications for the cable

Dimensioned drawing

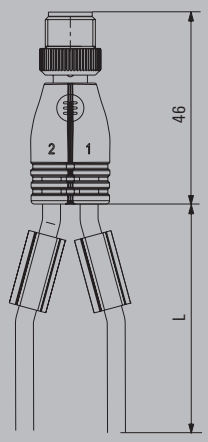

M8 one end without connector

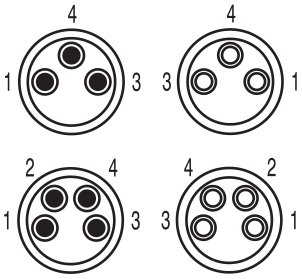

Male Female

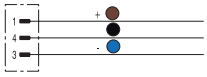

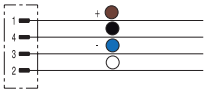

Ordering data

Male, straight		3-pole Type	3-pole Order No.	4-pole Type	4-pole Order No.
PVC	1.5 m	SAIL-M8G-3-1.5V	1927230150	SAIL-M8G-4-1.5V	1927250150
PUR halogen-free	1.5 m	SAIL-M8G-3-1.5U	1824590150	SAIL-M8G-4-1.5U	1906270150
Male, angled					
PVC	1.5 m	SAIL-M8W-3-1.5V	1927310150	SAIL-M8W-4-1.5V	1927330150
PUR halogen-free	1.5 m	SAIL-M8W-3-1.5U	1857550150	SAIL-M8W-4-1.5U	1857560150
Female, straight					
PVC	1.5 m	SAIL-M8BG-3-1.5V	1927240150	SAIL-M8BG-4-1.5V	1927260150
PUR halogen-free	1.5 m	SAIL-M8BG-3-1.5U	9457450150	SAIL-M8BG-4-1.5U	9457850150
PUR halogen-free yellow	1.5 m	SAIL-M8BG-3-1.5UGE	1093190150	SAIL-M8BG-4-1.5UGE	1093200150
Female, angled					
PVC	1.5 m	SAIL-M8BW-3-1.5V	1927320150	SAIL-M8BW-4-1.5V	1927340150
PUR halogen-free	1.5 m	SAIL-M8BW-3-1.5U	9457380150	SAIL-M8BW-4-1.5U	9456150150
PUR halogen-free yellow	1.5 m	SAIL-M8BW-3-1.5UGE	1093220150	SAIL-M8BW-4-1.5UGE	1093240150
Note					

Standard cable lengths

All cables listed under the ordering data have a length of 1.5 metres. The last four ordering digits must be changed when ordering other standard cable lengths.

1.5 m	xxxxxx0150
3.0 m	xxxxxx0300
5.0 m	xxxxxx0500
10.0 m	xxxxxx1000

Technical data

Rated current	4 A
Protection degree	IP 65, IP 66, IP 67, IP 68
Core cross-section	0.25 mm²
Contact surface	Gold-plated
Temperature range of housing	-25...+85 °C
Rated voltage (acc. to VDE standard 0110 ISO group C)	60 V (3-pole) / 30 V (4-pole)
Approvals	cURus; GOSTME25; ROHS

Chapter W includes additional technical specifications for the cable

Dimensioned drawing

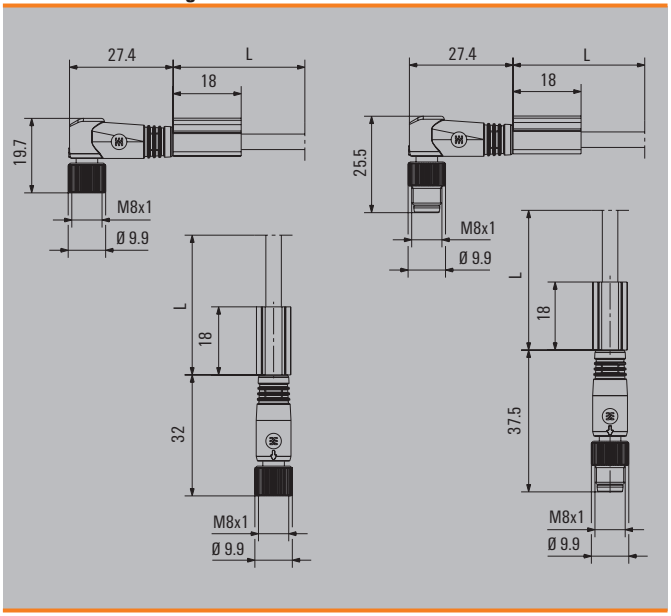

Sensor cables

M8 one end without connector snap-on connection

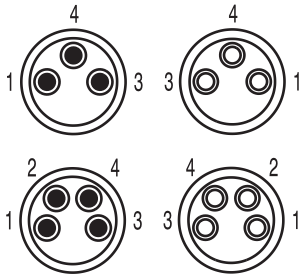

Male Female

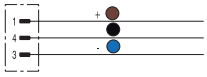

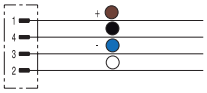

Ordering data

Female, straight		3-pole Type	3-pole Order No.	4-pole Type	4-pole Order No.
PVC	1.5 m	SAIL-M8BGR-3-1.5V	1948710150	SAIL-M8BGR-4-1.5V	1948730150
PUR halogen-free	1.5 m	SAIL-M8BGR-3-1.5U	1827020150	SAIL-M8BGR-4-1.5U	1948530150
Female, angled					
PVC	1.5 m	SAIL-M8BWR-3-1.5V	1948720150	SAIL-M8BWR-4-1.5V	1948740150
PUR halogen-free	1.5 m	SAIL-M8BWR-3-1.5U	1827010150	SAIL-M8BWR-4-1.5U	1948540150
Note		Other versions on request		Other versions on request	

Standard cable lengths

All cables listed under the ordering data have a length of 1.5 metres. The last four ordering digits must be changed when ordering other standard cable lengths.	1.5 m	xxxxxx0150
	3.0 m	xxxxxx0300
	5.0 m	xxxxxx0500
	10.0 m	xxxxxx1000

Technical data

Rated current	4 A
Protection degree	IP 65
Core cross-section	0.25 mm²
Contact surface	Gold-plated
Temperature range of housing	-25...+85 °C
Rated voltage (acc. to VDE standard 0110 ISO group C)	60 V (3-pole) / 30 V (4-pole)
Approvals	

Chapter W includes additional technical specifications for the cable

Dimensioned drawing

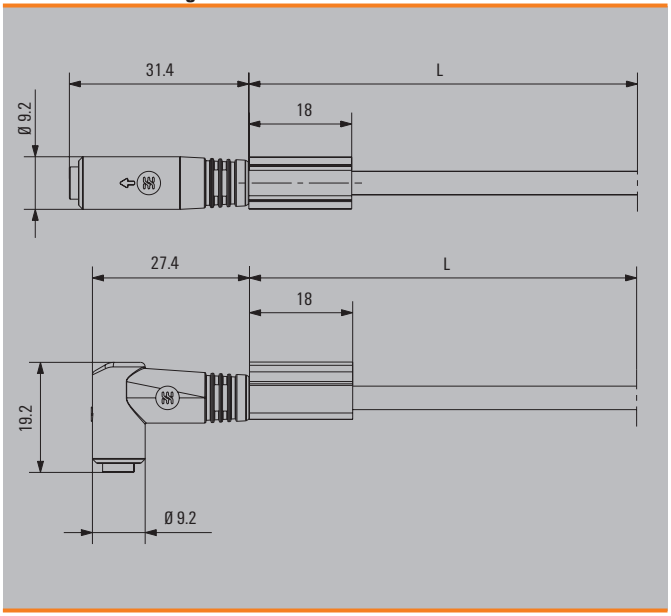

M8 one end without connector with LED

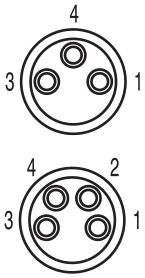

Female

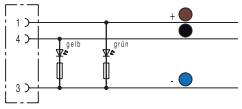

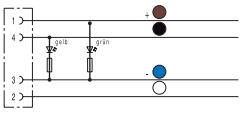

Ordering data

Female, angled		3-pole Type	3-pole Order No.	4-pole Type	4-pole Order No.
PVC	1.5 m	SAIL-M8BW-3L1.5V	1927350150	SAIL-M8BW-4L1.5V	1927360150
PUR halogen-free	1.5 m	SAIL-M8BW-3L1.5U	9457460150	SAIL-M8BW-4L1.5U	1906400150
PUR halogen-free yellow	1.5 m	SAIL-M8BW-3L1.5UGE	1093210150	SAIL-M8BW-4L1.5UGE	1093230150
Note		Other versions on request		Other versions on request	

Standard cable lengths

All cables listed under the ordering data have a length of 1.5 metres. The last four ordering digits must be changed when ordering other standard cable lengths.	1.5 m	xxxxxx0150
	3.0 m	xxxxxx0300
	5.0 m	xxxxxx0500
	10.0 m	xxxxxx1000

Technical data

Rated current	4 A
Protection degree	IP 65, IP 66, IP 67, IP 68
Core cross-section	0.25 mm²
Contact surface	Gold-plated
Temperature range of housing	-25...+85 °C
Rated voltage (acc. to VDE standard 0110 ISO group C)	60 V (3-pole) / 30 V (4-pole)
Approvals	CSA; cURus; GOSTME25; ROHS

Chapter W includes additional technical specifications for the cable

Dimensioned drawing

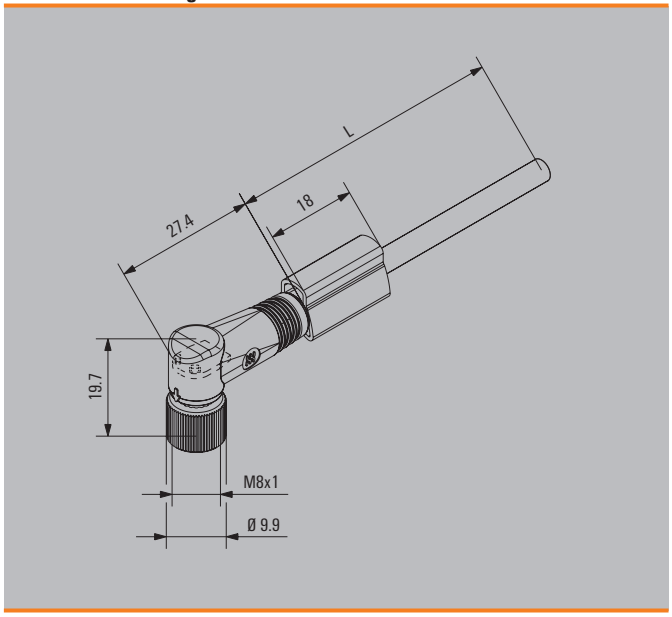

Sensor cables

M8 one end without connector shielded

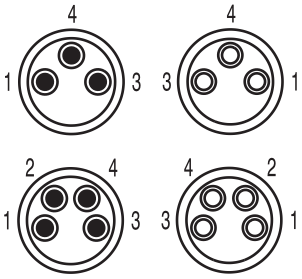

Male Female

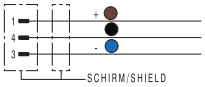

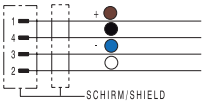

Ordering data

		3-pole	4-pole
Male, straight			
PUR halogen-free	1.5 m	SAIL-M8G-3S1.5U **1906560150**	SAIL-M8G-4S1.5U **1906570150**
Male, angled			
PUR halogen-free	1.5 m	SAIL-M8W-3S1.5U **1906580150**	SAIL-M8W-4S1.5U **1906590150**
Female, straight			
PUR halogen-free	1.5 m	SAIL-M8BG-3S1.5U **1906600150**	SAIL-M8BG-4S1.5U **1906610150**
Female, angled			
PUR halogen-free	1.5 m	SAIL-M8BW-3S1.5U **1906620150**	SAIL-M8BW-4S1.5U **1906630150**
Note		Other versions on request	Other versions on request

Standard cable lengths

All cables listed under the ordering data have a length of 1.5 metres. The last four ordering digits must be changed when ordering other standard cable lengths.

1.5 m	xxxxxx0150
3.0 m	xxxxxx0300
5.0 m	xxxxxx0500
10.0 m	xxxxxx1000

Technical data

Rated current	4 A
Protection degree	IP 67
Core cross-section	0.34 mm²
Contact surface	Gold-plated
Temperature range of housing	-25...+85 °C
Rated voltage (acc. to VDE standard 0110 ISO group C)	60 V (3-pole) / 30 V (4-pole)
Approvals	

Chapter W includes additional technical specifications for the cable

Dimensioned drawing

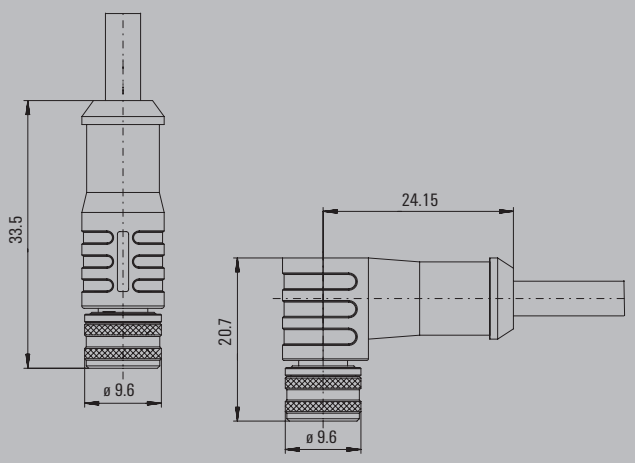

M5 one end without connector

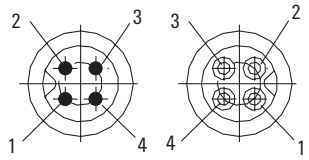

Male Female

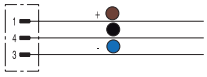

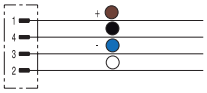

Ordering data

Type	Length	3-pole Order No.	4-pole Type	4-pole Order No.
Male, straight				
PUR halogen-free	1.5 m	**1854060150**	SAIL-M5G-4P-1.5U	**1871700150**
Male, angled				
PUR halogen-free	1.5 m	**1873280150**	SAIL-M5W-4P-1.5U	**1873240150**
Female, straight				
PUR halogen-free	1.5 m	**1873290150**	SAIL-M5BG-4P-1.5U	**1873250150**
Female, angled				
PUR halogen-free	1.5 m	**1873260150**	SAIL-M5BW-4P-1.5U	**1873270150**
Note		Other versions on request	Other versions on request	

Standard cable lengths

All cables listed under the ordering data have a length of 1.5 metres. The last four ordering digits must be changed when ordering other standard cable lengths.	1.5 m	xxxxxx0150
	3.0 m	xxxxxx0300
	5.0 m	xxxxxx0500
	10.0 m	xxxxxx1000

Technical data

Rated current	1 A
Protection degree	IP 67
Core cross-section	0.25 mm²
Contact surface	Gold-plated
Temperature range of housing	-25...+85 °C
Rated voltage (acc. to VDE standard 0110 ISO group C)	60 V
Approvals	

Chapter W includes additional technical specifications for the cable

Dimensioned drawing

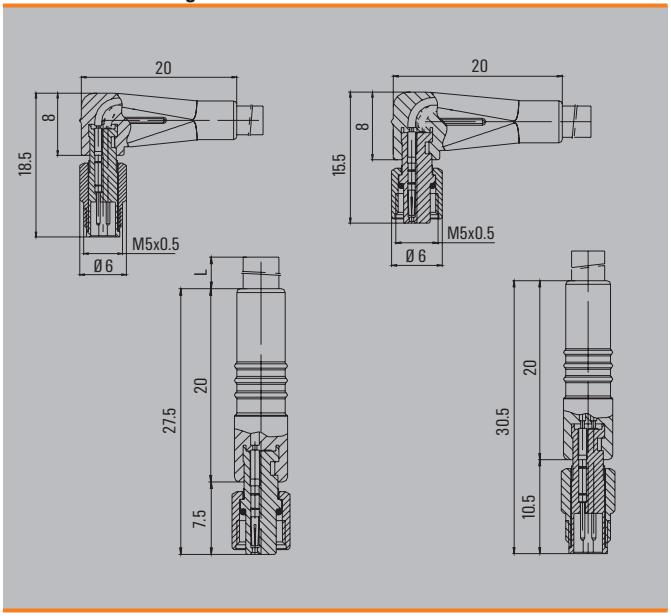

Connecting cables

M12

M8

M8 Snap connection

Twin cabling

Many applications with sensors require suitable connecting cables. The connecting cables are available in different designs.
The M12/M8 plug-in connectors are available in straight and 90° versions and also with LEDs.

- When plugged in, the M12 connecting cables comply with IP 68 ingress protection class.
- The cable sheathing is black and made of polyurethane (PUR or PVC).
- The connecting cables are supplied with two marking sleeves.

Corresponding tags TM-I 18 for the marking sleeves can be found in chapter I.

Sensor cables

Weidmüller can supply various cable lengths as indicated in the following table:

Typical cable lengths are:

• 1.5 m	• 3.0 m	• 5.0 m	• 10.0 m

Example of designation

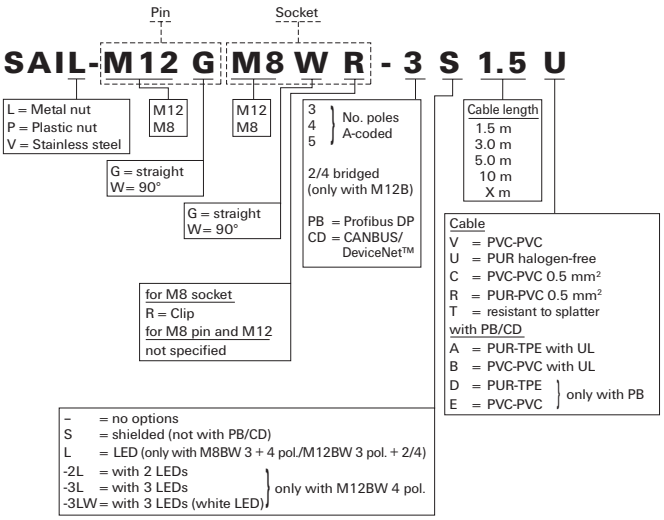

Connecting cables
M12 to M12
A-coded

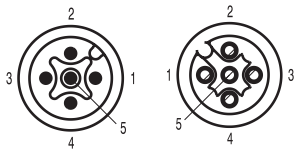

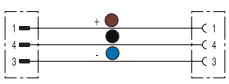

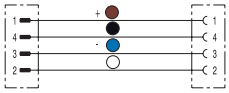

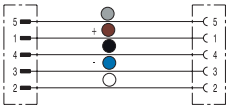

Ordering data

Male, straight - Female, straight		3-pole Type	3-pole Order No.	4-pole Type	4-pole Order No.	5-pole Type	5-pole Order No.
PVC	1.5 m	SAIL-M12GM12G-3-1.5V	1925300150	SAIL-M12GM12G-4-1.5V	1925310150	SAIL-M12GM12G-5-1.5V	1925320150
PUR halogen-free	1.5 m	SAIL-M12GM12G-3-1.5U	9457230150	SAIL-M12GM12G-4-1.5U	1906300150	SAIL-M12GM12G-5-1.5U	9457340150
PUR halogen-free yellow	1.5 m	SAIL-M12GM12G-3-1.5UGE	1093010150	SAIL-M12GM12G-4-1.5UGE	1093020150	SAIL-M12GM12G-5-1.5UGE	1093030150
Resistant to welding beads	1.5 m	SAIL-M12GM12G-3-1.5T	1021710150	SAIL-M12GM12G-4-1.5T	1021730150	SAIL-M12GM12G-5-1.5T	1011970150
Male, straight - Female, angled							
PVC	1.5 m	SAIL-M12GM12W-3-1.5V	1925340150	SAIL-M12GM12W-4-1.5V	1925350150	SAIL-M12GM12W-5-1.5V	1925360150
PUR halogen-free	1.5 m	SAIL-M12GM12W-3-1.5U	9457390150	SAIL-M12GM12W-4-1.5U	9457310150	SAIL-M12GM12W-5-1.5U	9457270150
PUR halogen-free yellow	1.5 m	SAIL-M12GM12W-3-1.5UGE	1093050150	SAIL-M12GM12W-4-1.5UGE	1093070150	SAIL-M12GM12W-5-1.5UGE	1093080150
Resistant to welding beads	1.5 m	SAIL-M12GM12W-3-1.5T	1021720150	SAIL-M12GM12W-4-1.5T	1021740150	SAIL-M12GM12W-5-1.5T	1011990150
Male, angled - Female, angled							
PVC	1.5 m	SAIL-M12WM12W-3-1.5V	1925380150	SAIL-M12WM12W-4-1.5V	1925390150	SAIL-M12WM12W-5-1.5V	1925400150
PUR halogen-free	1.5 m	SAIL-M12WM12W-3-1.5U	1815670150	SAIL-M12WM12W-4-1.5U	1906310150	SAIL-M12WM12W-5-1.5U	9457900150
Note		Other versions on request		Other versions on request		Other versions on request	

Standard cable lengths

All cables listed under the ordering data have a length of 1.5 metres. The last four ordering digits must be changed when ordering other standard cable lengths.	1.5 m	xxxxxx0150
	3.0 m	xxxxxx0300
	5.0 m	xxxxxx0500
	10.0 m	xxxxxx1000

Technical data

Rated current	4 A
Protection degree	IP 65, IP 66, IP 67, IP 68
Core cross-section	0.34 mm²
Contact surface	Gold-plated
Temperature range of housing	-25...+85 °C
Rated voltage (acc. to VDE standard 0110 ISO group C)	250 V (3- and 4-pole) / 125 V (5-pole)
Approvals	cULus; GOSTME25; ROHS

Chapter W includes additional technical specifications for the cable

Dimensioned drawing

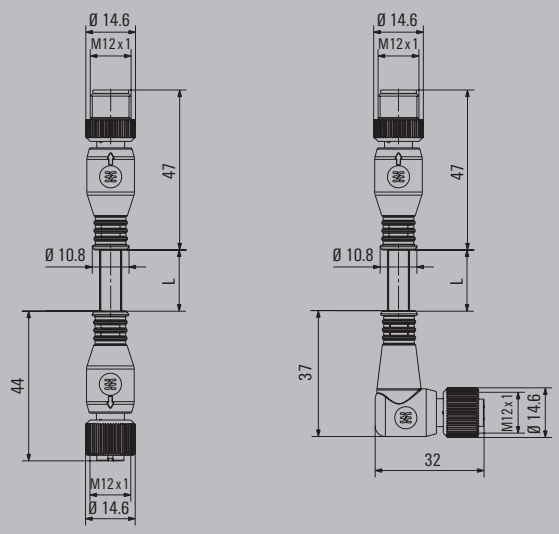

Connecting cables
M12 to M12
A-coded
Bridged between pins 2 and 4

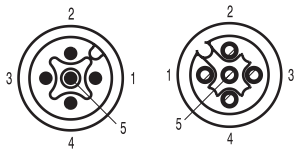

Male Female

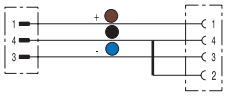

Ordering data

Male, straight - Female, straight		Type	3-pole Order No.
PVC	1.5 m	SAIL-M12GM12G-2/4-1.5V	1925330150
PUR halogen-free	1.5 m	SAIL-M12GM12G-2/4-1.5U	9456990150
PUR halogen-free yellow	1.5 m	SAIL-M12GM12G-2/4-1.5UGE	1093000150
Male, straight - Female, angled			
PVC	1.5 m	SAIL-M12GM12W-2/4-1.5V	1925370150
PUR halogen-free	1.5 m	SAIL-M12GM12W-2/4-1.5U	9457890150
PUR halogen-free yellow	1.5 m	SAIL-M12GM12W-2/4-1.5UGE	1093040150
Note			

Standard cable lengths

All cables listed under the ordering data have a length of 1.5 metres. The last four ordering digits must be changed when ordering other standard cable lengths.

1.5 m	xxxxxx0150
3.0 m	xxxxxx0300
5.0 m	xxxxxx0500
10.0 m	xxxxxx1000

Technical data

Rated current	4 A
Protection degree	IP 65, IP 66, IP 67, IP 68
Core cross-section	0.34 mm²
Contact surface	Gold-plated
Temperature range of housing	-25...+85 °C
Rated voltage (acc. to VDE standard 0110 ISO group C)	250 V (3- and 4-pole) / 125 V (5-pole)
Approvals	cULus; GOSTME25; ROHS

Chapter W includes additional technical specifications for the cable

Dimensioned drawing

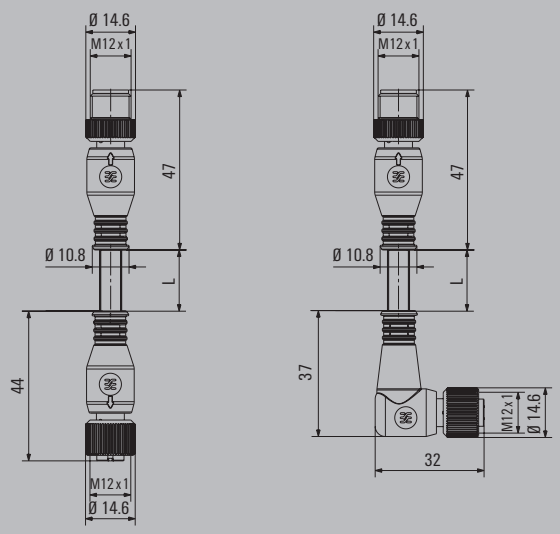

Connecting cables
M12 to M12, LED
A-coded
male, straight - female, angled

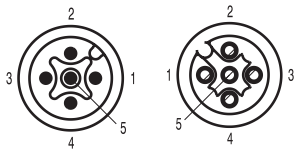

Male Female

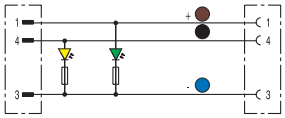

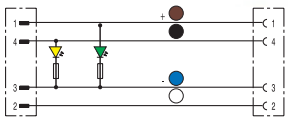

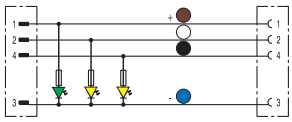

Ordering data

Male, straight - Female, angled		2 LEDs 3-pole		2 LEDs 4-pole		3 LEDs 4-pole	
		Type	Order No.	Type	Order No.	Type	Order No.
PVC	1.5 m	SAIL-M12GM12W-3L1.5V	1925410150	SAIL-M12GM12W-4-2L1.5V	1925420150	SAIL-M12GM12W-4-3L1.5V	1963930150
PUR halogen-free	1.5 m	SAIL-M12GM12W-3L1.5U	9457790150	SAIL-M12GM12W-4-2L1.5U	1906410150	SAIL-M12GM12W-4-3L1.5U	1963910150
PUR halogen-free yellow	1.5 m					SAIL-M12GM12W-4-3LW1.5UGE	1093060150
Resistant to welding beads	1.5 m	SAIL-M12GM12W-3L1.5T	1004320150	SAIL-M12GM12W-4-2L1.5T	1004310150	SAIL-M12GM12W-4-3LW1.5T	1020930150
Note		Other versions on request		Other versions on request		Other versions on request	

Standard cable lengths

All cables listed under the ordering data have a length of 1.5 metres. The last four ordering digits must be changed when ordering other standard cable lengths.	1.5 m	xxxxxx0150
	3.0 m	xxxxxx0300
	5.0 m	xxxxxx0500
	10.0 m	xxxxxx1000

Technical data

Rated current	4 A
Protection degree	IP 65, IP 66, IP 67, IP 68
Core cross-section	0.34 mm²
Contact surface	Gold-plated
Temperature range of housing	-25...+85 °C
Rated voltage (acc. to VDE standard 0110 ISO group C)	250 V (3- and 4-pole) / 125 V (5-pole)
Approvals	cURus; GOSTME25; ROHS

Chapter W includes additional technical specifications for the cable

Dimensioned drawing

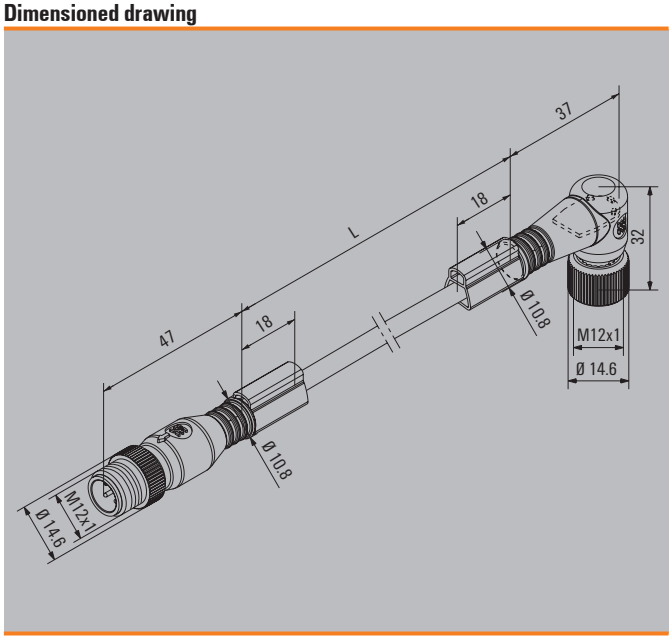

Connecting cables
M12 to M12
A-coded
shielded

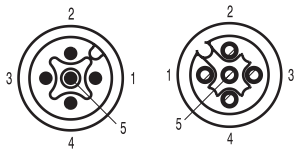

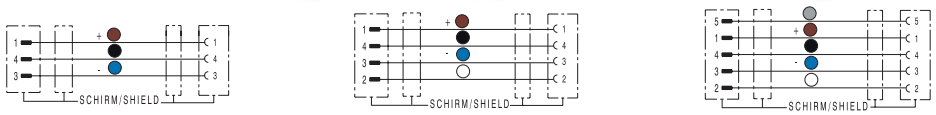

Ordering data

Male, straight - Female, straight		3-pole	4-pole	5-pole
PUR halogen-free	1.5 m			
Type		**Order No.**	**Order No.**	**Order No.**
		SAIL-M12GM12G-3S1.5U **1058490150**	SAIL-M12GM12G-4S1.5U **1058500150**	SAIL-M12GM12G-5S1.5U **1058510150**
Male, straight - Female, angled				
PUR halogen-free	1.5 m			
		SAIL-M12GM12W-3S1.5U **1059470150**	SAIL-M12GM12W-4S1.5U **1059480150**	SAIL-M12GM12W-5S1.5U **1059540150**
Male, angled - Female, angled				
PUR halogen-free	1.5 m			
		SAIL-M12WM12W-3S1.5U **1059720150**	SAIL-M12WM12W-4S1.5U **1059730150**	SAIL-M12WM12W-5S1.5U **1059740150**
Note		Other versions on request	Other versions on request	Other versions on request

Standard cable lengths

All cables listed under the ordering data have a length of 1.5 metres. The last four ordering digits must be changed when ordering other standard cable lengths.

1.5 m	xxxxxx0150
3.0 m	xxxxxx0300
5.0 m	xxxxxx0500
10.0 m	xxxxxx1000

Technical data

Rated current	4 A
Protection degree	IP 67
Core cross-section	0.34 mm²
Contact surface	Gold-plated
Temperature range of housing	-25...+85 °C
Rated voltage (acc. to VDE standard 0110 ISO group C)	250 V (3- and 4-pole) / 125 V (5-pole)
Approvals	cULus; GOSTME25; ROHS

Chapter W includes additional technical specifications for the cable

Dimensioned drawing

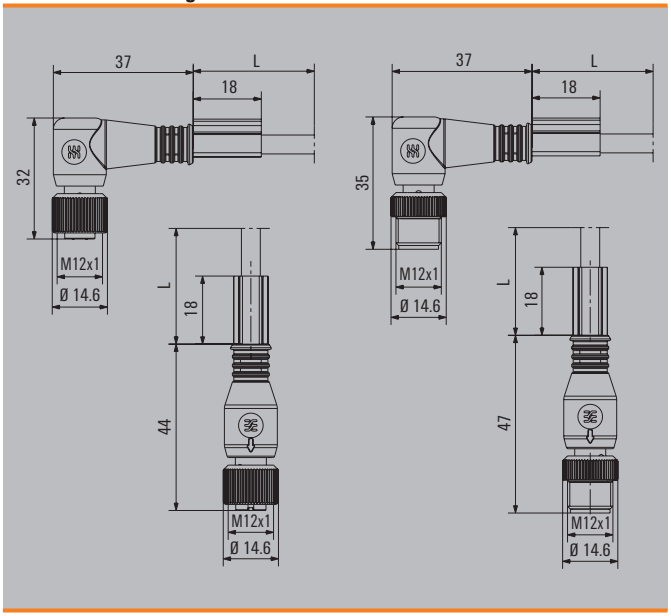

Connecting cables
M12 to M8

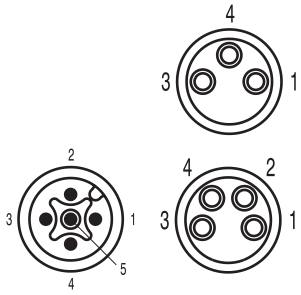

Male Female

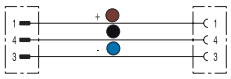

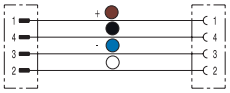

Ordering data

		3-pole	4-pole
Type		**Order No.**	**Order No.**
Male, straight - Female, straight			
PVC	1.5 m	1938170150	1938200150
PUR halogen-free	1.5 m	9457770150	9456660150
Male, straight - Female, angled			
PVC	1.5 m	1938180150	1938210150
PUR halogen-free	1.5 m	9457980150	9456670150
Male, angled - Female, angled			
PVC	1.5 m	1938190150	1938220150
PUR halogen-free	1.5 m	1906330150	1906340150
Note		Other versions on request	Other versions on request

Standard cable lengths

All cables listed under the ordering data have a length of 1.5 metres. The last four ordering digits must be changed when ordering other standard cable lengths.	1.5 m	xxxxxx0150
	3.0 m	xxxxxx0300
	5.0 m	xxxxxx0500
	10.0 m	xxxxxx1000

Technical data

Rated current	4 A
Protection degree	IP 65, IP 66, IP 67, IP 68
Core cross-section	0.25 mm²
Contact surface	Gold-plated
Temperature range of housing	-25...+85 °C
Rated voltage (acc. to VDE standard 0110 ISO group C)	60 V (3-pole) / 30 V (4-pole)
Approvals	cURus; GOSTME25; ROHS

Chapter W includes additional technical specifications for the cable

Dimensioned drawing

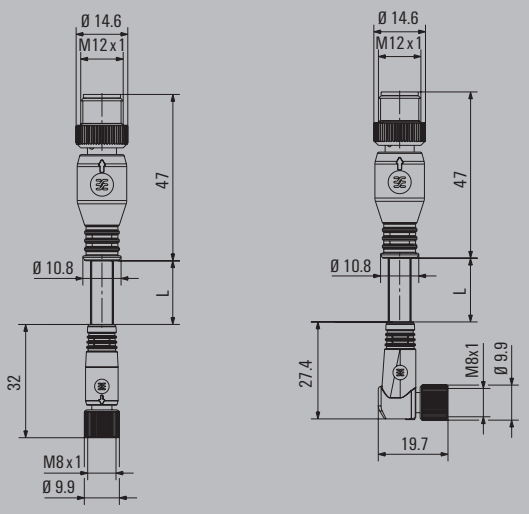

Connecting cables
M12 to M8
snap-on connection

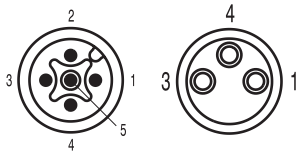

Male Female

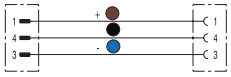

Ordering data

Male, straight - Female, straight			3-pole
PUR halogen-free	1.5 m	SAIL-M12GM8GR-3-1.5U	1984530150
Male, straight - Female, angled			
PUR halogen-free	1.5 m	SAIL-M12GM8WR-3-1.5U	9457570150
PUR halogen-free yellow	1.5 m	SAIL-M12GM8WR-3-1.5UGE	1093150150
Note		Other versions on request	

Standard cable lengths

All cables listed under the ordering data have a length of 1.5 metres. The last four ordering digits must be changed when ordering other standard cable lengths.	1.5 m	xxxxxx0150
	3.0 m	xxxxxx0300
	5.0 m	xxxxxx0500
	10.0 m	xxxxxx1000

Technical data

Rated current	4 A
Protection degree	IP 65, IP 66, IP 67, IP 68
Core cross-section	0.25 mm²
Contact surface	Gold-plated
Temperature range of housing	-25...+85 °C
Rated voltage (acc. to VDE standard 0110 ISO group C)	60 V (3-pole) / 30 V (4-pole)
Approvals	

Chapter W includes additional technical specifications for the cable

Dimensioned drawing

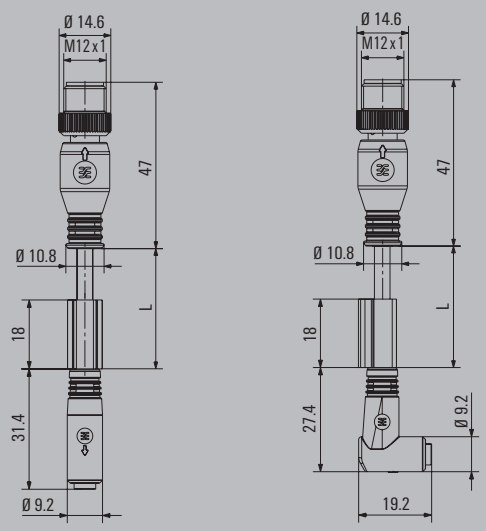

Connecting cables
M12 to M8 LED

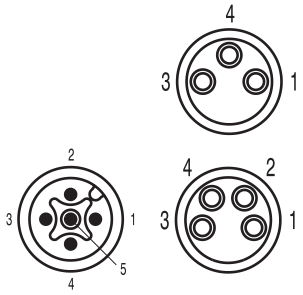

Male Female

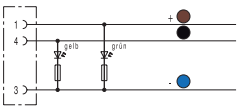

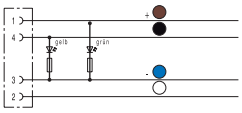

Ordering data

Male, straight - Female, angled		2 LEDs 3-pole Type	Order No.	2 LEDs 4-pole Type	Order No.
PVC	1.5 m	SAIL-M12GM8W-3L1.5V	1962290150	SAIL-M12GM8W-4L1.5V	1962300150
PUR halogen-free	1.5 m	SAIL-M12GM8W-3L1.5U	9457760150	SAIL-M12GM8W-4L1.5U	1906430150
PUR halogen-free yellow	1.5 m	SAIL-M12GM8W-3L1.5UGE	1093110150	SAIL-M12GM8W-4L1.5UGE	1093130150
Note					

Standard cable lengths

All cables listed under the ordering data have a length of 1.5 metres. The last four ordering digits must be changed when ordering other standard cable lengths.	1.5 m	xxxxxx0150
	3.0 m	xxxxxx0300
	5.0 m	xxxxxx0500
	10.0 m	xxxxxx1000

Technical data

Rated current	4 A
Protection degree	IP 65, IP 66, IP 67, IP 68
Core cross-section	0.25 mm²
Contact surface	Gold-plated
Temperature range of housing	-25...+85 °C
Rated voltage (acc. to VDE standard 0110 ISO group C)	60 V (3-pole) / 30 V (4-pole)
Approvals	cURus; GOSTME25; ROHS

Chapter W includes additional technical specifications for the cable

Dimensioned drawing

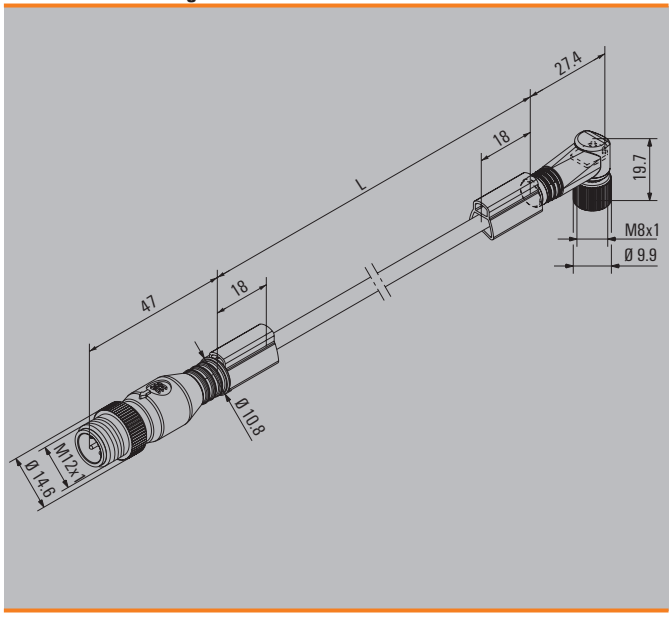

Sensor cables

Connecting cables
M8 to M8

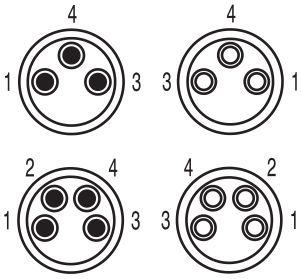

Male Female

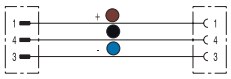

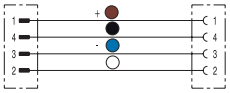

Ordering data

Type		3-pole Order No.	4-pole Type	4-pole Order No.
Male, straight - Female, straight				
PVC	1.5 m	SAIL-M8GM8G-3-1.5V **1927150150**	SAIL-M8GM8G-4-1.5V	**1927160150**
PUR halogen-free	1.5 m	SAIL-M8GM8G-3-1.5U **1824570150**	SAIL-M8GM8G-4-1.5U	**1880470150**
PUR halogen-free yellow	1.5 m	SAIL-M8GM8G-3-1.5UGE **1104470150**		
Male, straight - Female, angled				
PVC	1.5 m	SAIL-M8GM8W-3-1.5V **1927170150**	SAIL-M8GM8W-4-1.5V	**1927180150**
PUR halogen-free	1.5 m	SAIL-M8GM8W-3-1.5U **1824580150**	SAIL-M8GM8W-4-1.5U	**1857660150**
Male, angled - Female, angled				
PVC	1.5 m	SAIL-M8WM8W-3-1.5V **1927210150**	SAIL-M8WM8W-4-1.5V	**1927220150**
PUR halogen-free	1.5 m	SAIL-M8WM8W-3-1.5U **1857670150**	SAIL-M8WM8W-4-1.5U	**1857680150**
Note			Other versions on request	

Standard cable lengths

All cables listed under the ordering data have a length of 1.5 metres. The last four ordering digits must be changed when ordering other standard cable lengths.	1.5 m	xxxxxx0150
	3.0 m	xxxxxx0300
	5.0 m	xxxxxx0500
	10.0 m	xxxxxx1000

Technical data

Rated current	4 A
Protection degree	IP 67
Core cross-section	0.25 mm²
Contact surface	Gold-plated
Temperature range of housing	-25...+85 °C
Rated voltage (acc. to VDE standard 0110 ISO group C)	60 V (3-pole) / 30 V (4-pole)
Approvals	cURus; GOSTME25; ROHS

Chapter W includes additional technical specifications for the cable

Dimensioned drawing

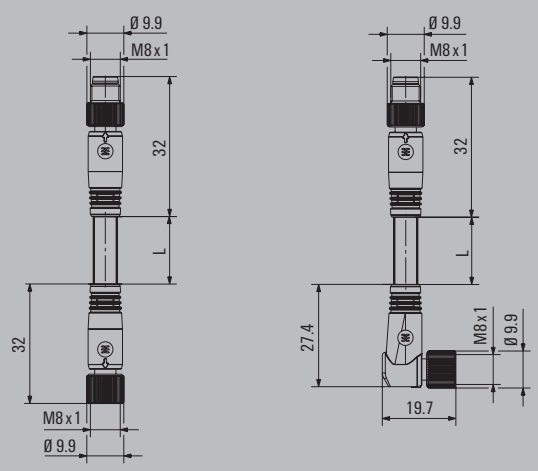

Connecting cables
M8 to M8
snap-on connection

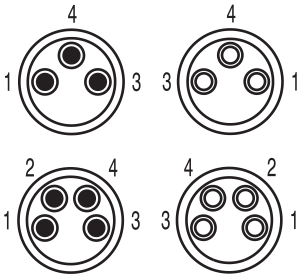

Male Female

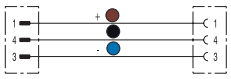

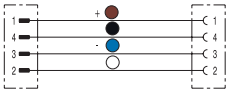

Ordering data

Type		3-pole Order No.	Type	4-pole Order No.
Male, straight - Female, straight				
PVC	1.5 m			
PUR halogen-free	1.5 m			
Male, straight - Female, angled				
PVC	1.5 m	SAIL-M8GM8GR-3-1.5V	**1948650150**	SAIL-M8GM8GR-4-1.5V **1948680150**
PUR halogen-free	1.5 m	SAIL-M8GM8GR-3-1.5U	**1948470150**	SAIL-M8GM8GR-4-1.5U **1948500150**
Male, angled - Female, angled				
PVC	1.5 m	SAIL-M8GM8WR-3-1.5V	**1948660150**	SAIL-M8GM8WR-4-1.5V **1948690150**
PUR halogen-free	1.5 m	SAIL-M8GM8WR-3-1.5U	**1948480150**	SAIL-M8GM8WR-4-1.5U **1948510150**
Note		SAIL-M8WM8WR-3-1.5V	**1948670150**	SAIL-M8WM8WR-4-1.5V **1948700150**
		SAIL-M8WM8WR-3-1.5U	**1948490150**	SAIL-M8WM8WR-4-1.5U **1948520150**
		Other versions on request		Other versions on request

Standard cable lengths

All cables listed under the ordering data have a length of 1.5 metres. The last four ordering digits must be changed when ordering other standard cable lengths.

1.5 m	xxxxxx0150
3.0 m	xxxxxx0300
5.0 m	xxxxxx0500
10.0 m	xxxxxx1000

Technical data

Rated current	4 A
Protection degree	IP 65
Core cross-section	0.25 mm²
Contact surface	Gold-plated
Temperature range of housing	-25...+85 °C
Rated voltage (acc. to VDE standard 0110 ISO group C)	60 V (3-pole) / 30 V (4-pole)
Approvals	

Chapter W includes additional technical specifications for the cable

Dimensioned drawing

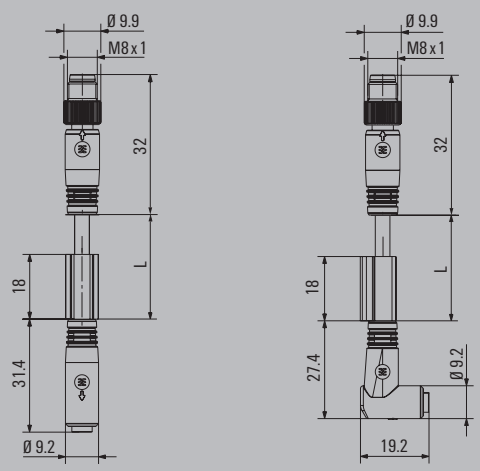

Sensor cables

Connecting cables
M8 to M8 LED

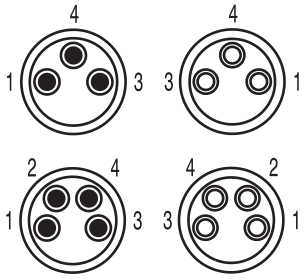

Male Female

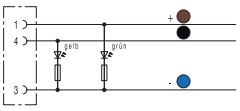

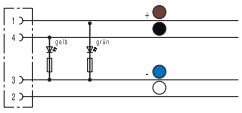

Ordering data

Male, straight - Female, angled		2 LEDs 3-pole Type	Order No.	2 LEDs 4-pole Type	Order No.
PVC	1.5 m	SAIL-M8GM8W-3L1.5V	1927190150	SAIL-M8GM8W-4L1.5V	1927200150
PUR halogen-free	1.5 m	SAIL-M8GM8W-3L1.5U	1877250150	SAIL-M8GM8W-4L1.5U	1906450150
Note		Other versions on request		Other versions on request	

Standard cable lengths

All cables listed under the ordering data have a length of 1.5 metres. The last four ordering digits must be changed when ordering other standard cable lengths.	1.5 m	xxxxxx0150
	3.0 m	xxxxxx0300
	5.0 m	xxxxxx0500
	10.0 m	xxxxxx1000

Technical data

Rated current	4 A
Protection degree	IP 67
Core cross-section	0.25 mm²
Contact surface	Gold-plated
Temperature range of housing	-25...+85 °C
Rated voltage (acc. to VDE standard 0110 ISO group C)	60 V (3-pole) / 30 V (4-pole)
Approvals	cURus; GOSTME25; ROHS

Chapter W includes additional technical specifications for the cable

Dimensioned drawing

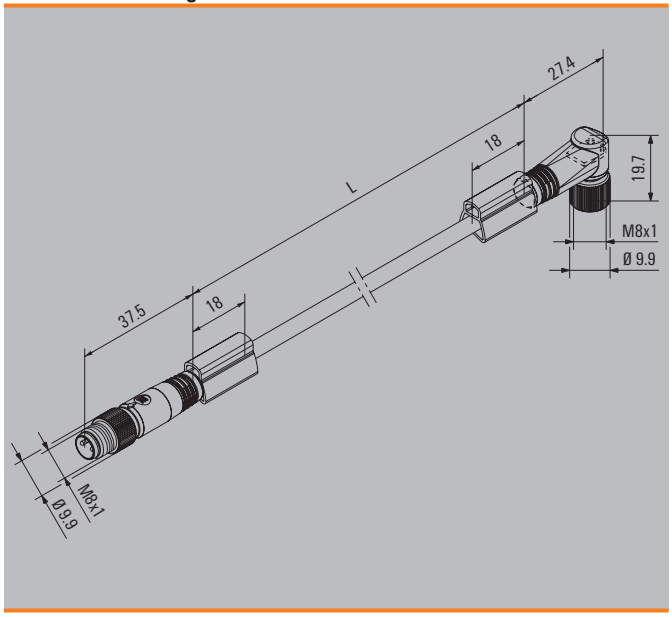

Twin sensor cables with three plug-in connectors: M12/M8

Twin sensor cables

In general, two sensor cables can be fed with an M12 connector to the distributor. A wide variety of wiring arrangements are possible with these cables. All M12 and M8 connections can be implemented.

Weidmüller has all the necessary components available. With mechanical engineering, this type of application is an exception.

4-pole connection

In the SAI distributor, the 4 pole socket is fitted with pins 1, 3, 4 and 5. The 4 pole SAI plug is fitted with pins 1, 2, 3 and 4. This corresponds to market standards.

Special care must be taken when wiring combinations of 4-pole plugs and distributors.

Designation

Twin plug
Bifurcation open for "1" and "2" ends

One designation is no longer necessary when dealing with identical cable lengths.

Bifurcation 1 / Bifurcation 2

SAIL-ZW - M8 - 3.0 / 1.5 U

- SAIL: L = Metal nut; P = Plastic nut
- M8: M12; M8
- 3.0 / 1.5: Cable length 1.5 m, 3.0 m, 5.0 m, 10 m, X m
- U: Cable V = PVC-PVC; U = PUR halogen-free; T = resistant to splatter

Twin plug
Connecting cable

Bifurcation 1 and 2 identical / Bifurcation 1 and 2 identical length

SAIL-ZW-M12BW - 2/4 - 1.5 U

- SAIL: L = Metal nut; P = Plastic nut
- M12: M12; M8
- B: B = Socket
- W: G = straight; W = 90°
- 2/4: with M8BG / M8BW: 3- = 3-pole; with M12BG / M12BW: 3- = 3-pole, 2/4- = 2/4 bridged; with M8BW LED: 3L = LED; with M12BW LED: 3L = 3-pole LED, 2/4L = 2/4 bridged LED
- 1.5: Cable length 1.5 m, 3.0 m, 5.0 m, 10 m, X m
- U: Cable V = PVC-PVC; U = PUR halogen-free; T = resistant to splatter

Twin cabling
M12 to M12

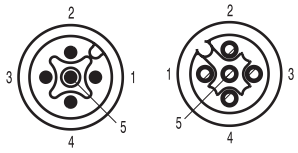

Male Female

Ordering data

Male straight - 2 females straight		3-pole	2 LEDs	3-pole
		Type	Order No.	Type	Order No.
PUR halogen-free	1.5 m	SAIL-ZW-M12BG-3-1.5U	1005460150		
Male straight - 2 females angled					
PUR halogen-free	1.5 m	SAIL-ZW-M12BW-3-1.5U	1005270150	SAIL-ZW-M12BW-3L1.5U	1912110150
Note					

Standard cable lengths

All cables listed under the ordering data have a length of 1.5 metres. The last four ordering digits must be changed when ordering other standard cable lengths.	1.5 m	xxxxxx0150
	3.0 m	xxxxxx0300
	5.0 m	xxxxxx0500
	10.0 m	xxxxxx1000

Technical data

Rated current	4 A
Protection degree	IP 65, IP 66, IP 67, IP 68
Core cross-section	0.34 mm²
Contact surface	Gold-plated
Temperature range of housing	-25...+85 °C
Rated voltage (acc. to VDE standard 0110 ISO group C)	250 V
Approvals	CSA; cURus; GOSTME25; ROHS

Chapter W includes additional technical specifications for the cable

Dimensioned drawing

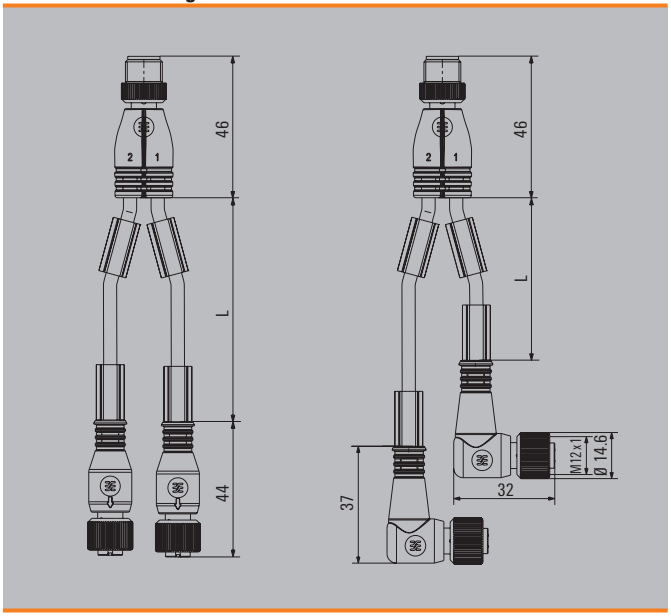

Sensor cables

Twin cabling M12 to M12 bridge between pins 2 and 4

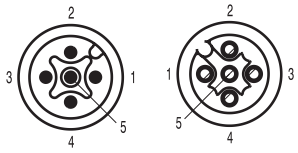

Male Female

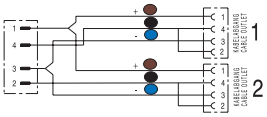

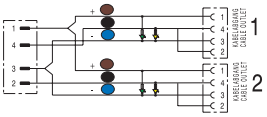

Ordering data

Male straight - 2 females straight		3-pole	2 LEDs	3-pole	
		Type	Order No.	Type	Order No.
PUR halogen-free	1.5 m	SAIL-ZW-M12BG-2/4-1.5U	**1812550150**		
Male straight - 2 females angled					
PUR halogen-free	1.5 m	SAIL-ZW-M12BW-2/4-1.5U	**1964280150**	SAIL-ZW-M12BW-2/4L1.5U	**1964290150**
Note					

Standard cable lengths

All cables listed under the ordering data have a length of 1.5 metres. The last four ordering digits must be changed when ordering other standard cable lengths.	1.5 m	xxxxxx0150
	3.0 m	xxxxxx0300
	5.0 m	xxxxxx0500
	10.0 m	xxxxxx1000

Technical data

Rated current	4 A
Protection degree	IP 65, IP 66, IP 67, IP 68
Core cross-section	0.34 mm²
Contact surface	Gold-plated
Temperature range of housing	-25...+85 °C
Rated voltage (acc. to VDE standard 0110 ISO group C)	250 V (3- and 4-pole) / 125 V (5-pole)
Approvals	

Chapter W includes additional technical specifications for the cable

Dimensioned drawing

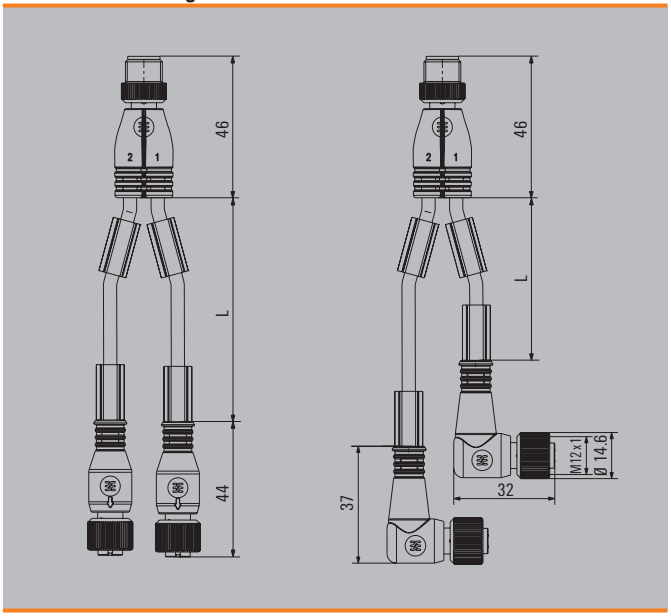

Twin cabling
M12 to M8

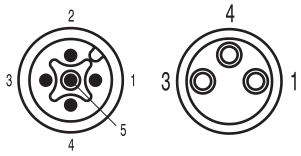

Male Female

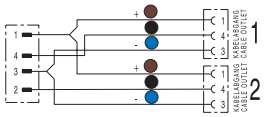

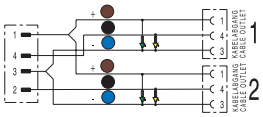

Ordering data

Male straight - 2 females straight		3-pole Type	3-pole Order No.	2 LEDs Type	2 LEDs 3-pole Order No.
PUR halogen-free	1.5 m	SAIL-ZW-M8BG-3-1.5U	9457490150		
PUR halogen-free yellow	1.5 m	SAIL-ZW-M8BG-3-1.5UGE	1093250150		
Male straight - 2 females angled					
PUR halogen-free	1.5 m	SAIL-ZW-M8BW-3-1.5U	1964300150	SAIL-ZW-M8BW-3L1.5U	9457410150
PUR halogen-free yellow	1.5 m	SAIL-ZW-M8BW-3-1.5UGE	1093260150		
Note				Other versions on request	

Standard cable lengths

All cables listed under the ordering data have a length of 1.5 metres. The last four ordering digits must be changed when ordering other standard cable lengths.	1.5 m	xxxxxx0150
	3.0 m	xxxxxx0300
	5.0 m	xxxxxx0500
	10.0 m	xxxxxx1000

Technical data

Rated current	4 A
Protection degree	IP 65, IP 66, IP 67, IP 68
Core cross-section	0.25 mm²
Contact surface	Gold-plated
Temperature range of housing	-25...+85 °C
Rated voltage (acc. to VDE standard 0110 ISO group C)	60 V (3-pole) / 30 V (4-pole)
Approvals	cURus; GOSTME25; ROHS

Chapter W includes additional technical specifications for the cable

Dimensioned drawing

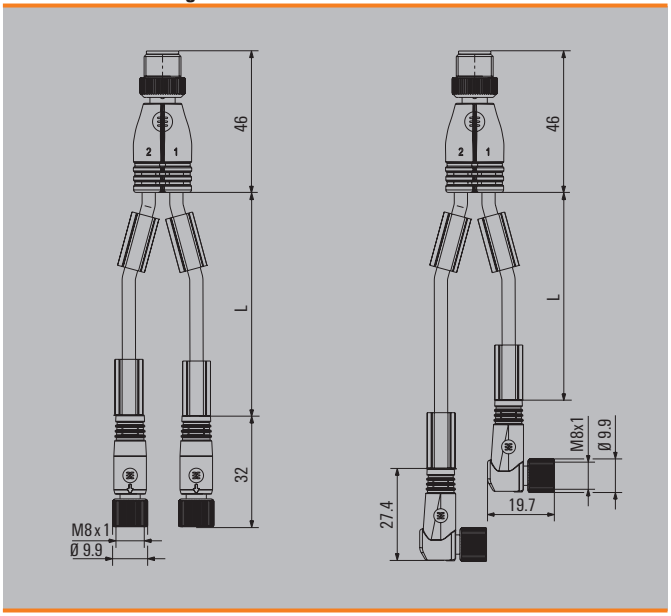

M16 lines, moulded
One end without connector

Female

Ordering data

		12-pole
	Type	Order No.
PUR 1.5 m	SAIL-M16BW-12-1.5U	1259010150
Note		

Standard cable lengths

All cables listed in the ordering data have a length of 1.5 metres. The last four ordering digits must be changed when ordering other standard cable lengths.	1.5 m	xxxxxx0150
	3.0 m	xxxxxx0300
	5.0 m	xxxxxx0500
	10.0 m	xxxxxx1000

Technical data

Rated current	3 A
Protection degree	IP 67
Core cross-section	0.25 mm²
Contact surface	Gold-plated
Temperature range of housing	-25 ... +70 °C
Rated voltage (acc. to VDE standard 0110 ISO goup C)	60 V

Dimensioned drawing

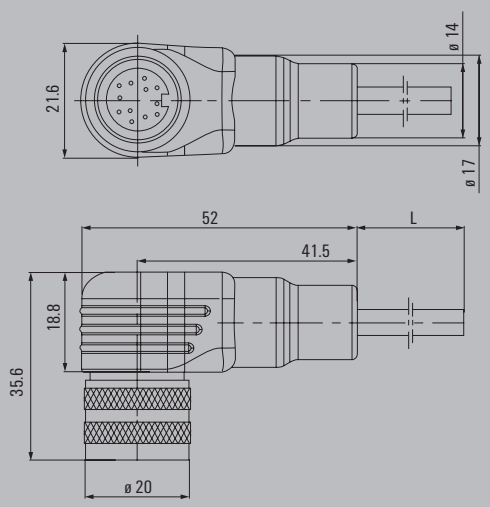

B-coded M12 cables

Connector coding is very important to avoid the potential risk of damage due to connectors being incorrectly plugged together. This risk is particularly high when you need to plug in differing voltages. For example, it is not unusual to connect 110 or 230 V with a M12 plug-in connector. However if a 24 V electric potential is connected with a 110 or 230 V line, it will inevitably lead to destructive results. B-coding has been introduced for such cases. B-coded connectors are shaped so that they can not be fitted together unless extreme force is used. This coding makes it safe to use the standard M12 connector system in a single machine for different voltages which may exceeding 24 V. For the SAI Active Universal System, the power plug is A-coded since it only provides 24 V. The Profibus DP also takes advantage of this coding scheme. It is currently the only bus system using B-coded M12 plugs for IP 67-protected connections. In this case, special approved bulk stock cable is used instead of the power cables.

M12 one end without connector
unshielded
B-coded

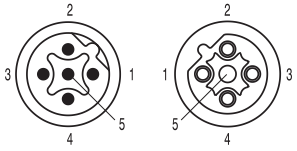

Male Female

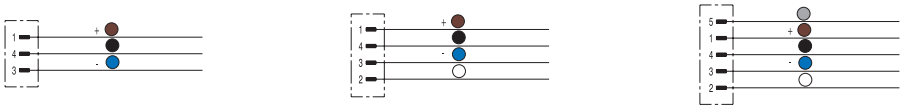

Ordering data

		3-pole	4-pole	5-pole
Male, straight				
PUR halogen-free	1.5 m			
Male, angled				
PUR halogen-free	1.5 m			
Female, straight				
PUR halogen-free	1.5 m			
Female, angled				
PUR halogen-free	1.5 m			
Note				

Type	Order No.	Type	Order No.	Type	Order No.
SAIL-M12G-3B-1.5U	**1057770150**	SAIL-M12G-4B-1.5U	**1057780150**	SAIL-M12G-5B-1.5U	**1057790150**
SAIL-M12W-3B-1.5U	**1057800150**	SAIL-M12W-4B-1.5U	**1057810150**	SAIL-M12W-5B-1.5U	**1057820150**
SAIL-M12BG-3B-1.5U	**1057740150**	SAIL-M12BG-4B-1.5U	**1057750150**	SAIL-M12BG-5B-1.5U	**1061880150**
SAIL-M12BW-3B-1.5U	**1061890150**	SAIL-M12BW-4B-1.5U	**1061900150**	SAIL-M12BW-5B-1.5U	**1057760150**

Standard cable lengths

All cables listed under the ordering data have a length of 1.5 metres. The last four ordering digits must be changed when ordering other standard cable lengths.

1.5 m	xxxxxx0150
3.0 m	xxxxxx0300
5.0 m	xxxxxx0500
10.0 m	xxxxxx1000

Technical data

Rated current	4 A
Protection degree	IP 65, IP 66, IP 67, IP 68
Core cross-section	0.34 mm²
Contact surface	Gold-plated
Temperature range of housing	-25...+85 °C
Rated voltage (acc. to VDE standard 0110 ISO group C)	250 V (3- and 4-pole) / 125 V (5-pole)
Approvals	

Chapter W includes additional technical specifications for the cable

Dimensioned drawing

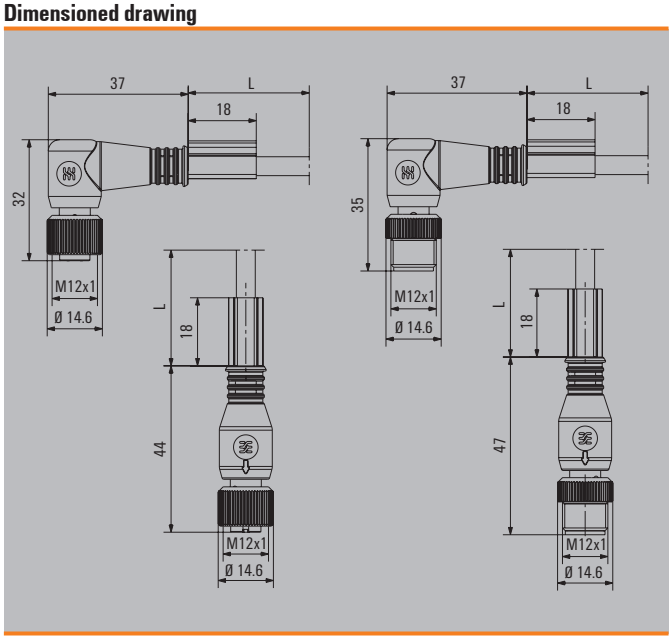

M12 connecting cable
unshielded
B-coded

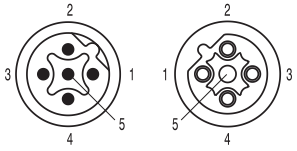

Male Female

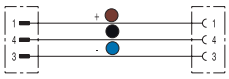

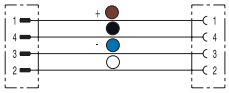

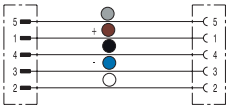

Ordering data

Type	Order No. 3-pole	Order No. 4-pole	Order No. 5-pole
Male, straight - Female, straight			
PUR halogen-free 1.5 m	SAIL-M12GM12G-3B-1.5U **1057830150**	SAIL-M12GM12G-4B-1.5U **1057840150**	SAIL-M12GM12G-5B-1.5U **1057850150**
Male, straight - Female, angled			
PUR halogen-free 1.5 m	SAIL-M12GM12W-3B-1.5U **1057900150**	SAIL-M12GM12W-4B-1.5U **1057910150**	SAIL-M12GM12W-5B-1.5U **1057920150**
Male, angled - Female, angled			
PUR halogen-free 1.5 m	SAIL-M12WM12W-3B-1.5U **1061910150**	SAIL-M12WM12W-4B-1.5U **1061920150**	SAIL-M12WM12W-5B-1.5U **1061930150**
Male, angled - female, straight			
PUR halogen-free 1.5 m	SAIL-M12WM12G-3B-1.5U **1057870150**	SAIL-M12WM12G-4B-1.5U **1057880150**	SAIL-M12WM12G-5B-1.5U **1057890150**
Note	Other versions on request	Other versions on request	Other versions on request

Standard cable lengths

All cables listed under the ordering data have a length of 1.5 metres. The last four ordering digits must be changed when ordering other standard cable lengths.	1.5 m	xxxxxx0150
	3.0 m	xxxxxx0300
	5.0 m	xxxxxx0500
	10.0 m	xxxxxx1000

Technical data

Rated current	4 A
Protection degree	IP 65, IP 66, IP 67, IP 68
Core cross-section	0.34 mm²
Contact surface	Gold-plated
Temperature range of housing	-25...+85 °C
Rated voltage (acc. to VDE standard 0110 ISO group C)	250 V (3- and 4-pole) / 125 V (5-pole)
Approvals	

Chapter W includes additional technical specifications for the cable

Dimensioned drawing

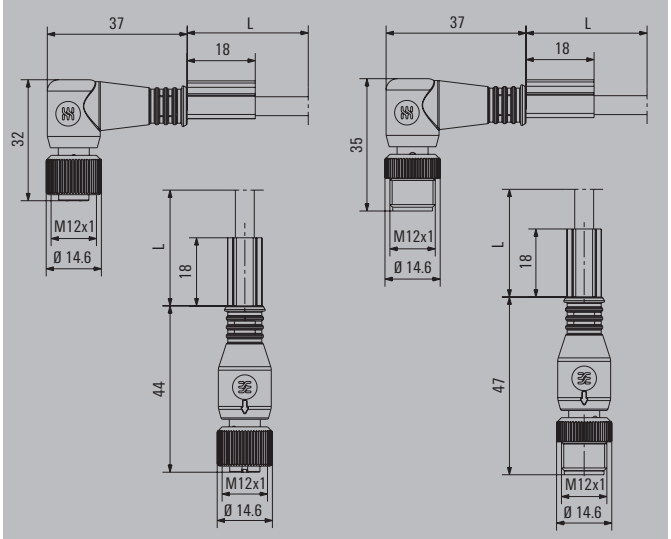

Valve plug, ISO 4400

Machine builders frequently need different cable lengths for valve plugs. Valve plugs with free cable ends can be used to adjust the cable exactly to the lengths required.

Weidmüller can also supply valve plugs as connecting cables with M12 plugs.

The status of the valve plug is shown by an LED. Every valve plug is fitted with a protective circuit.

The Weidmüller range includes valve plugs of type A, B and C to DIN and industry standards.

Weidmüller plugs comply with IP 67 ingress protection class when plugged in.

The outgoing direction is also crucial. Weidmüller can supply 0° versions, i.e. the outgoing direction of the cable is at the PE contact.

Valve plug Type A **Valve plug Type B**

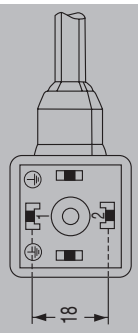

Contact gap 18 mm

Type: VSA

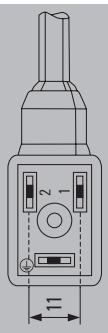

Contact gap 11 mm
Industry standard
Type: VSB

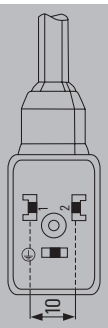

Contact gap 10 mm
to DIN 43650 (ISO 6952)
Type: VSBD

Valve plug Type C

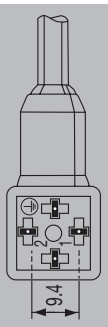

Contact gap 9.4 mm
Industry standard
Type: VSC

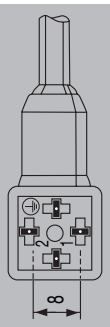

Contact gap 8 mm
to DIN 43650 (ISO 6952)
Type: VSCD

Types

Type	Contact gap
Type A	18 mm
Type B industry standard	11 mm
Type B DIN	10 mm
Type C industry standard	9.4 mm
Type C DIN	8.0 mm

Example of designation

Valve plug
Connector at one end only

SAIL-VSBD - 1.5 U

Valve plug	Cable length	Cable
VSA	1.5 m	Q = PUR-TPE
VSB	3.0 m	V = PVC-PVC
VSBD	5.0 m	U = PUR-PVC
VSC	10 m	
VSCD	X m	

Valve plug
Connecting cable

SAIL-VSBD - M8W 1.5 U

Socket: VSBD
Pin: M8W

Valve plug	M12 / M8	G = straight / W = 90°	Cable length	Cable
VSA	M12	G = straight	1.5 m	Q = PUR-TPE
VSB	M8	W = 90°	3.0 m	V = PVC-PVC
VSBD			5.0 m	U = PUR-PVC
VSC			10 m	
VSCD			X m	

Design A

Ordering data

		Type	A Order No.
Open cable end - valve plug			
	1.5 m	SAIL-VSA-1.5U	**9457710150**
Male straight - valve plug			
	1.5 m	SAIL-VSA-M12G-1.5U	**9457040000**
Male angled - valve plug			
	1.5 m	SAIL-VSA-M12W-1.5U	**1857690150**
Note		Other versions on request	

Standard cable lengths

All cables listed under the ordering data have a length of 1.5 metres. The last four ordering digits must be changed to order other standard cable lengths.	1.5 m	xxxxxx0150
	3.0 m	xxxxxx0300
	5.0 m	xxxxxx0500
	10.0 m	xxxxxx1000

Technical data

Sheathing colour	Grey
Sheath material	PUR
Rated current	4 A
Protection degree	IP 67
Core cross-section	0.75 mm²
Contact surface	tinned
Temperature range of housing	-25...+85 °C
Rated voltage (acc. to VDE standard 0110 ISO group C)	24 V
Approvals	

L in the drawing is the cable length

Dimensioned drawing

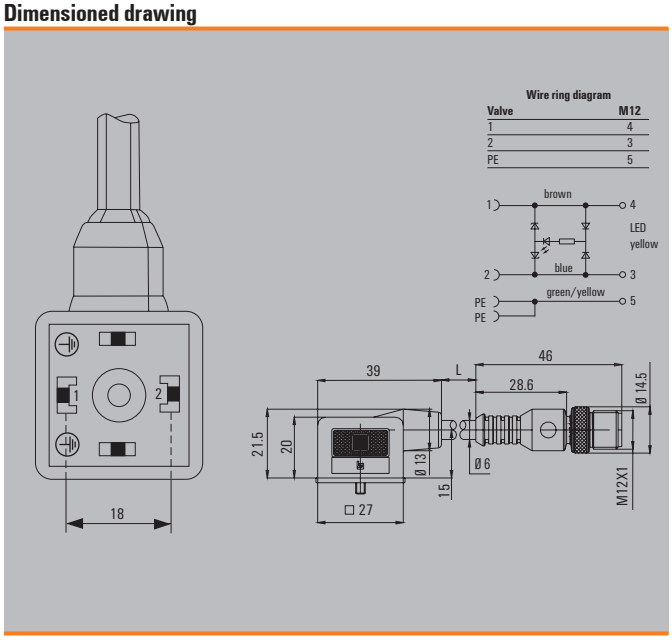

Valve cables

Design B/BD

B = Industrial standard
BD = DIN Standard

Ordering data

		B	BD
Open cable end - valve plug	**Type**	**Order No.**	**Type** / **Order No.**
1.5 m	SAIL-VSB-1.5U	**9457930150**	SAIL-VSBD-1.5U / **9456070150**
Male straight - valve plug			
1.5 m	SAIL-VSB-M12G-1.5U	**9457680150**	SAIL-VSBD-M12G-1.5U / **9457780150**
Male angled - valve plug			
1.5 m	SAIL-VSB-M12W-1.5U	**1857700150**	SAIL-VSBD-M12W-1.5U / **1857710150**
Note	Other versions on request		Other versions on request

Standard cable lengths

All cables listed under the ordering data have a length of 1.5 metres. The last four ordering digits must be changed to order other standard cable lengths.	1.5 m	xxxxxx0150
	3.0 m	xxxxxx0300
	5.0 m	xxxxxx0500
	10.0 m	xxxxxx1000

Technical data

Sheathing colour	Grey
Sheath material	PUR
Rated current	4 A
Protection degree	IP 67
Core cross-section	0.75 mm²
Contact surface	tinned
Temperature range of housing	-25...+85 °C
Rated voltage (acc. to VDE standard 0110 ISO group C)	24 V
Approvals	

L in the drawing is the cable length

Dimensioned drawing

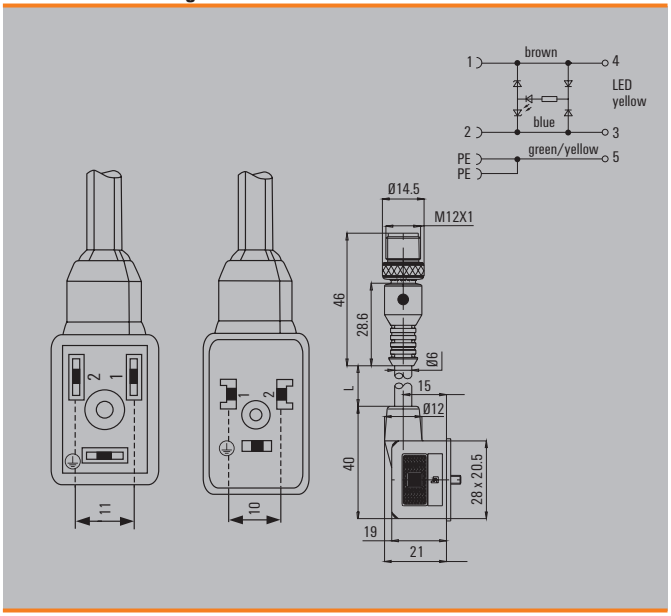

Design C/CD

C = Industrial standard
CD = DIN Standard

Ordering data

		C	CD
Open cable end - valve plug	**Type**	**Order No.**	**Type** / **Order No.**
1.5 m	SAIL-VSC-1.5U	**9457920150**	SAIL-VSCD-1.5U **9456240150**
Male straight - valve plug			
1.5 m	SAIL-VSC-M12G-1.5U	**9457400150**	SAIL-VSCD-M12G-1.5U **9456170150**
Male angled - valve plug			
1.5 m	SAIL-VSC-M12W-1.5U	**1857720150**	SAIL-VSCD-M12W-1.5U **1857730150**
Note	Other versions on request		Other versions on request

Standard cable lengths

All cables listed under the ordering data have a length of 1.5 metres. The last four ordering digits must be changed to order other standard cable lengths.	1.5 m	xxxxxx0150
	3.0 m	xxxxxx0300
	5.0 m	xxxxxx0500
	10.0 m	xxxxxx1000

Technical data

Sheathing colour	Grey
Sheath material	PUR
Rated current	4 A
Protection degree	IP 67
Core cross-section	0.5 mm²
Contact surface	tinned
Temperature range of housing	-25...+85 °C
Rated voltage (acc. to VDE standard 0110 ISO group C)	24 V
Approvals	

L in the drawing is the cable length

Dimensioned drawing

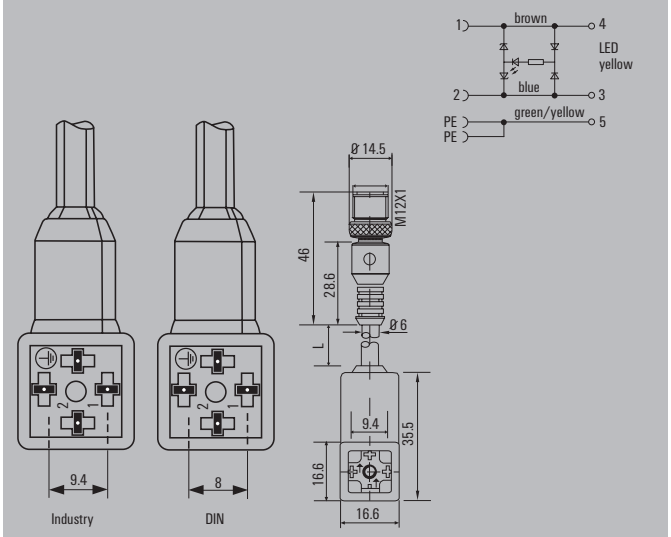

Introduction

Type A

Type B

Type C

When building special machines, individual cable lengths are frequently required, which are then joined directly to Weidmüller's IDC distributors. Our product portfolio contains a corresponding valve plug for such applications.

This valve plug has a transparent enclosure with integral seal. In addition, a protective sleeve can be slipped over the cable to protect the connected line. The connection cross-section is 0.5 mm^2 for direct connection to our SAI IDC distributor.
The status of the valve plug is indicated by an LED. All valve plugs are fitted with protective circuits.

The Weidmüller range includes valve plug forms A, B and C to DIN and industry standards. The plug conforms to ingress protection class IP 67 when plugged in.

Types

Type	Contact gap
Type A	18 mm
Type B industry standard	11 mm
Type B DIN	10 mm
Type C industry standard	9.4 mm
Type C DIN	8.0 mm

Design A

Suitable for IDC
plug-in connectors and protective hose
connection

Ordering data

Open cable end - valve plug		A
1.5 m	Type	Order No.
	SAIL-VSA-1.5U(0.5)	1845120150
Note	Supplied without protective hose	

Standard cable lengths

All cables listed under the ordering data have a length of 1.5 metres. The last four ordering digits must be changed to order other standard cable lengths.	1.5 m	xxxxxx0150
	3.0 m	xxxxxx0300
	5.0 m	xxxxxx0500
	10.0 m	xxxxxx1000

Technical data

Sheathing colour	Black
Sheath material	PUR
Rated current	4 A
Protection degree	IP 67
Core cross-section	0.5 mm²
Contact surface	tinned
Temperature range of housing	-25...+85 °C
Rated voltage (acc. to VDE standard 0110 ISO group C)	24 V
Approvals	

L in the drawing is the cable length

Dimensioned drawing

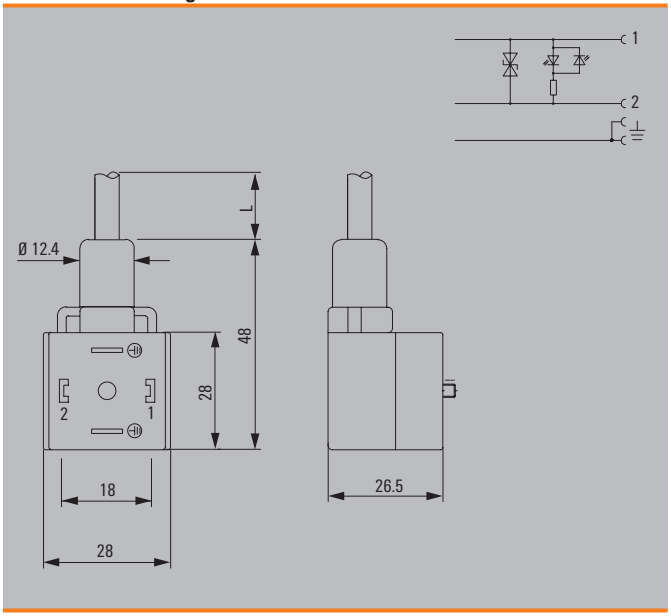

Valve cables

Design B/BD

B = industry standard
BD = DIN standard

Suitable for IDC
plug-in connectors and protective hose
connection

Ordering data

Open cable end - valve plug		B	BD
		Type / Order No.	Type / Order No.
	1.5 m	SAIL-VSB-1.5U(0.5) / 1845140150	SAIL-VSBD-1.5U(0.5) / 1845160150
Note		Supplied without protective hose	Supplied without protective hose

Standard cable lengths

All cables listed under the ordering data have a length of 1.5 metres. The last four ordering digits must be changed to order other standard cable lengths.	1.5 m	xxxxxx0150
	3.0 m	xxxxxx0300
	5.0 m	xxxxxx0500
	10.0 m	xxxxxx1000

Technical data

Sheathing colour	Black
Sheath material	PUR
Rated current	4 A
Protection degree	IP 67
Core cross-section	0.5 mm²
Contact surface	tinned
Temperature range of housing	-25...+85 °C
Rated voltage (acc. to VDE standard 0110 ISO group C)	24 V
Approvals	

L in the drawing is the cable length

Dimensioned drawing

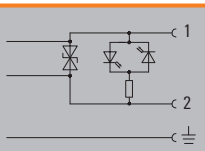

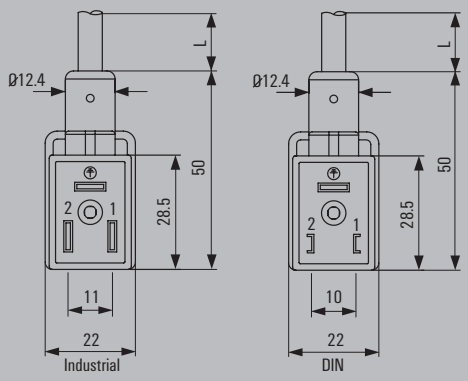

Design A

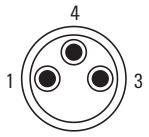

Male

Ordering data

Male straight - valve plug		A
	Type	Order No.
1.5 m	SAIL-VSA-M8G-3-1.5U	1099760150
Note		

Standard cable lengths

All cables listed under the ordering data have a length of 1.5 metres. The last four ordering digits must be changed to order other standard cable lengths.	1.5 m	xxxxxx0150
	3.0 m	xxxxxx0300
	5.0 m	xxxxxx0500
	10.0 m	xxxxxx1000

Technical data

Sheathing colour	Black
Sheath material	PUR
Rated current	4 A
Protection degree	IP 67 (when screwed in)
Core cross-section	0.34 mm²
Contact surface	tinned
Temperature range of housing	-25...+85 °C
Rated voltage (acc. to VDE standard 0110 ISO group C)	24 V
Approvals	

Dimensioned drawing

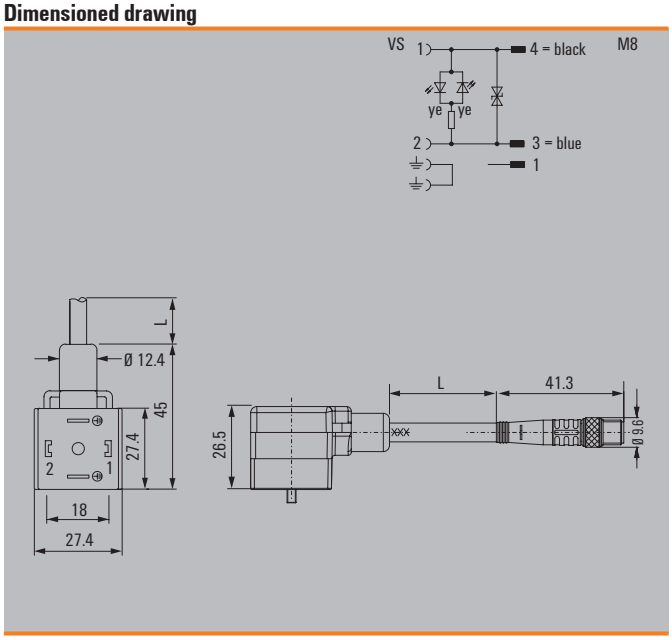

Valve cables

Design B/BD

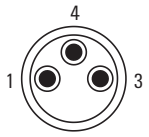

Male

Ordering data

Male straight - valve plug		BD Type	BD Order No.	B Type	B Order No.
	1.5 m	SAIL-VSB-M8G-3-0.15U	1271590015		
	1.5 m			SAIL-VSBD-M8G-3-1.5U	1099770150
Male straight - valve plug 180°					
	1.5 m			SAIL-VSBD180-M8G-3-1.5U	1276450150
Note					

Standard cable lengths

All cables listed under the ordering data have a length of 1.5 metres. The last four ordering digits must be changed to order other standard cable lengths.	1.5 m	xxxxxx0150
	3.0 m	xxxxxx0300
	5.0 m	xxxxxx0500
	10.0 m	xxxxxx1000

Technical data

Sheathing colour	Black
Sheath material	PUR
Rated current	4 A
Protection degree	IP 67 (when screwed in)
Core cross-section	0.34 mm²
Contact surface	tinned
Temperature range of housing	-25...+85 °C
Rated voltage (acc. to VDE standard 0110 ISO group C)	24 V
Approvals	

Dimensioned drawing

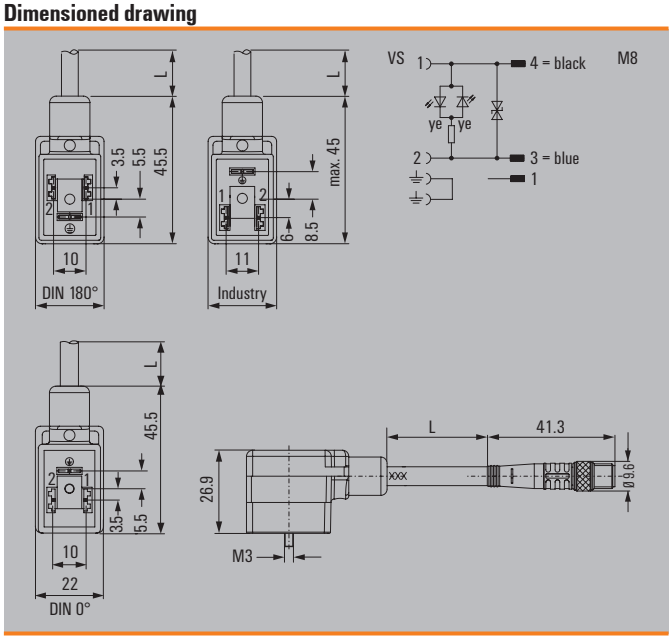

Design C/CD

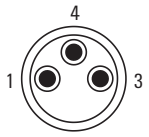

Male

Ordering data

Male straight - valve plug		CD	C
		Type / Order No.	Type / Order No.
	1.5 m		
	1.5 m	SAIL-VSCD-M8G-3-1.5U / **1916700150**	SAIL-VSC-M8G-0.15U / **1309680015**
Note			

Standard cable lengths

All cables listed under the ordering data have a length of 1.5 metres. The last four ordering digits must be changed to order other standard cable lengths.	1.5 m	xxxxxx0150
	3.0 m	xxxxxx0300
	5.0 m	xxxxxx0500
	10.0 m	xxxxxx1000

Technical data

Sheathing colour	Black
Sheath material	PUR
Rated current	4 A
Protection degree	IP 67 (when screwed in)
Core cross-section	0.34 mm²
Contact surface	tinned
Temperature range of housing	-25...+85 °C
Rated voltage (acc. to VDE standard 0110 ISO group C)	24 V
Approvals	

Dimensioned drawing

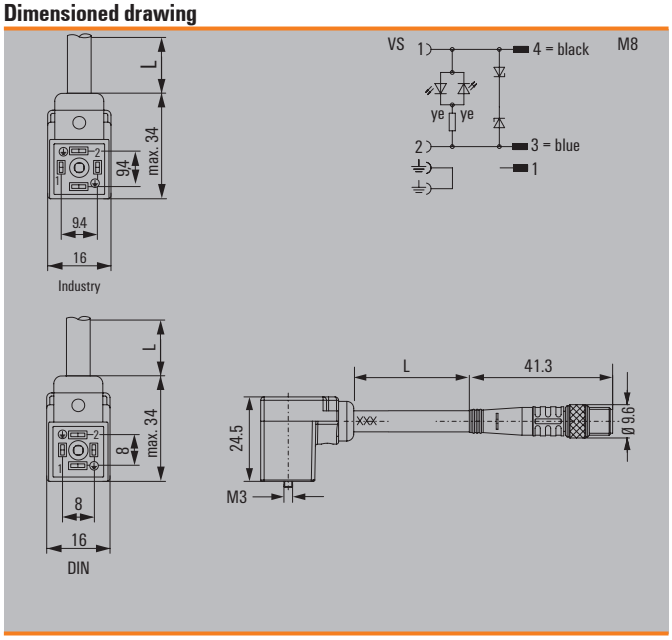

Cables 3, 4, 5 poles

Weidmüller can provide the following types of cables for connecting sensors and actuators:

- The outer sheathing of the cables is made from polyurethane and the inner stranded wires have PVC insulation.
- They are available with 3, 4 and 5 poles.
- In addition, the cables are also available with PVC outer sheathing and PVC insulation internally.

Ordering data

PUR halogen-free	Qty.	Order No.
SAIH-SLL-3x0.34mm² (PUR)	100 m	1902110000
SAIH-SLL-4x0.25mm² (PUR)	100 m	1902120000
SAIH-SLL-4x0.34mm² (PUR)	100 m	1902130000
SAIH-SLL-3x0.25mm² (PUR)	100 m	1902140000
PVC		
SAIH-SLL-3x0.34mm² (PVC)	100 m	1902160000
SAIH-SLL-4x0.25mm² (PVC)	100 m	1902170000
SAIH-SLL-4x0.34mm² (PVC)	100 m	1902180000
SAIH-SLL-3x0.25mm² (PVC)	100 m	1902190000
Note		

Technical data

Colour		black
Cross-section	mm²	0.25 ... 0.34
Qty.		100 Metre
Note		

Ordering data

PUR halogen-free yellow	Qty.	Order No.
SAIH-SLL-3x0.34mm² (UGE)	100 m	1345520000
SAIH-SLL-4x0.34mm² (UGE)	100 m	1345530000
SAIH-SLL-5x0.34mm² (UGE)	100 m	1345540000
PUR halogen-free shielded		
SAIH-SLL-3x0.34mm² (SI PUR)	100 m	1357320000
SAIH-SLL-4x0.34mm² (SI PUR)	100 m	1357330000
SAIH-SLL-5x0.34mm² (SI PUR)	100 m	1357340000
Note		

Technical data

Colour		black, yellow
Cross-section	mm²	0.34
Qty.		100 Metre
Note		

Bus cables

Owing to their easy assembly and adaptability, Weidmüller distributors have become very popular among machine manufacturers. For such applications, Weidmüller can supply corresponding bus cables for custom assembly.

The bus cables are available in three different versions. All bus cables are suitable for moving cable carriers and are available by the metre. All three trunk cables can be ordered in individual lengths. A typical order quantity is a 500 metre drum. The colour coding of wires conforms to the standard in mechanical engineering.

The connection hoods of the M12 SAI distributors are always fitted with the same terminals so that only one type of cable is equired.

Advantages of bus cables supplied by the metre:

- Special lengths for bus cables
- No cable waste
- No storage space required for different cable lengths
- Bulk stock will be cut to desired length.

Ordering data

Type	Qty.	Order No.
SAIH-SLL 3 x 0.75 – 16 x 0.34	1 m	**9457560000**
SAIH-SLL 5 x 0.75 – 16 x 0.34	1 m	**9457970000**
SAIH-SLL 3 x 0.75 – 8 x 0.34	1 m	**9457420000**
SAIH-SLL 3 x 1.0 – 16 x 0.5	1 m	**1344720000**

M8, M12 Fieldbus, data cables and accessories

M8, M12 Fieldbus, data cables and accessories	Introduction	C.2
	Fieldbus distributor - Overview	C.4
	PROFIBUS-DP - cables	C.6
	PROFIBUS-DP - connectors (M12, Sub-D)	C.11
	PROFIBUS-DP - FBCon T-distributor	C.22
	PROFIBUS-PA - cables	C.26
	PROFIBUS PA - connectors	C.31
	PROFIBUS-PA - FBCon T-distributor	C.34
	PROFIBUS-PA - FBCon T-distributor with surge protection	C.40
	PROFIBUS-PA - FBCon T-distributor ATEX Ex(ia)	C.50
	AS-Interface Line	C.58
	ASI - Cables	C.60
	ASI - T-piece	C.61
	CANopen & DeviceNet™ - cables (M12, M8)	C.62
	CANopen & DeviceNet™ - connectors	C.67
	EtherCat - connectors (M8)	C.68
	Ethernet cables	C.69
	Ethernet plug-in connector	C.77
	FOUNDATION Fieldbus - connector (7/8")	C.80
	Accessories cable glands	C.81

Bus cables

The bus system lies at the heart of automation engineering. High quality products are essential here, if you hope to achieve long term, smooth functionality.
It's not only the slaves and controllers that play a significant role; the type of cables and connection mechanisms in use are also very important. Weidmüller bus cables are the ideal solution. The products, which we manufacture ourselves, (used, for example, in the Profibus, Industrial Ethernet and CANopen/DeviceNet™ sectors) have a 360 degree shielding within the moulding. This provides effective protection for signal and data transmission.
Delivery times are another decisive factor. Our special production strategy allows us to quickly manufacture parts that are customised to a specific order. We have a dedicated department that is focussed on this strategy and which is located close to the Detmold central warehouse in order to keep delivery times to a minimum.

Bus cables: shown here in the standard colours:
blue (Profibus-PA Ex i), black (CANopen/DeviceNet or Profibus-PA), magenta (Profibus-DP) and green (Industrial Ethernet) together with the sensor cables

Cables

M12 plug-in connector

Sub-D connector

FBCon T-distributor

System description, fieldbus components

FBCon fieldbus distributors are available in industrial and Ex(ia) versions. They are used for coupling 1-8 field devices devices or sensors.
The connection is made via a spur. The spur is connected by an M12 plug in connector or directly via an EMC cable gland. The communication and device powering is handled by a common 2-core wire.

The distributors offer the following features irrespective of the version:

- Tension clamp connection technology
- Surge protection for the main line
- Current limiter for each stub line
- EMC cable gland
- M12 plug in connectors
- External earth stud
- Interruption-free bus operation
- Industrial specification
- Bus termination integrated (non EX)
- ⊛ ATEX version
- Pressure equalising element
- IP 65, IP 66, IP 67 Ingress protection class
- Stainless steel versions
- PROFIBUS-PA compatible

Typical PROFIBUS system layout

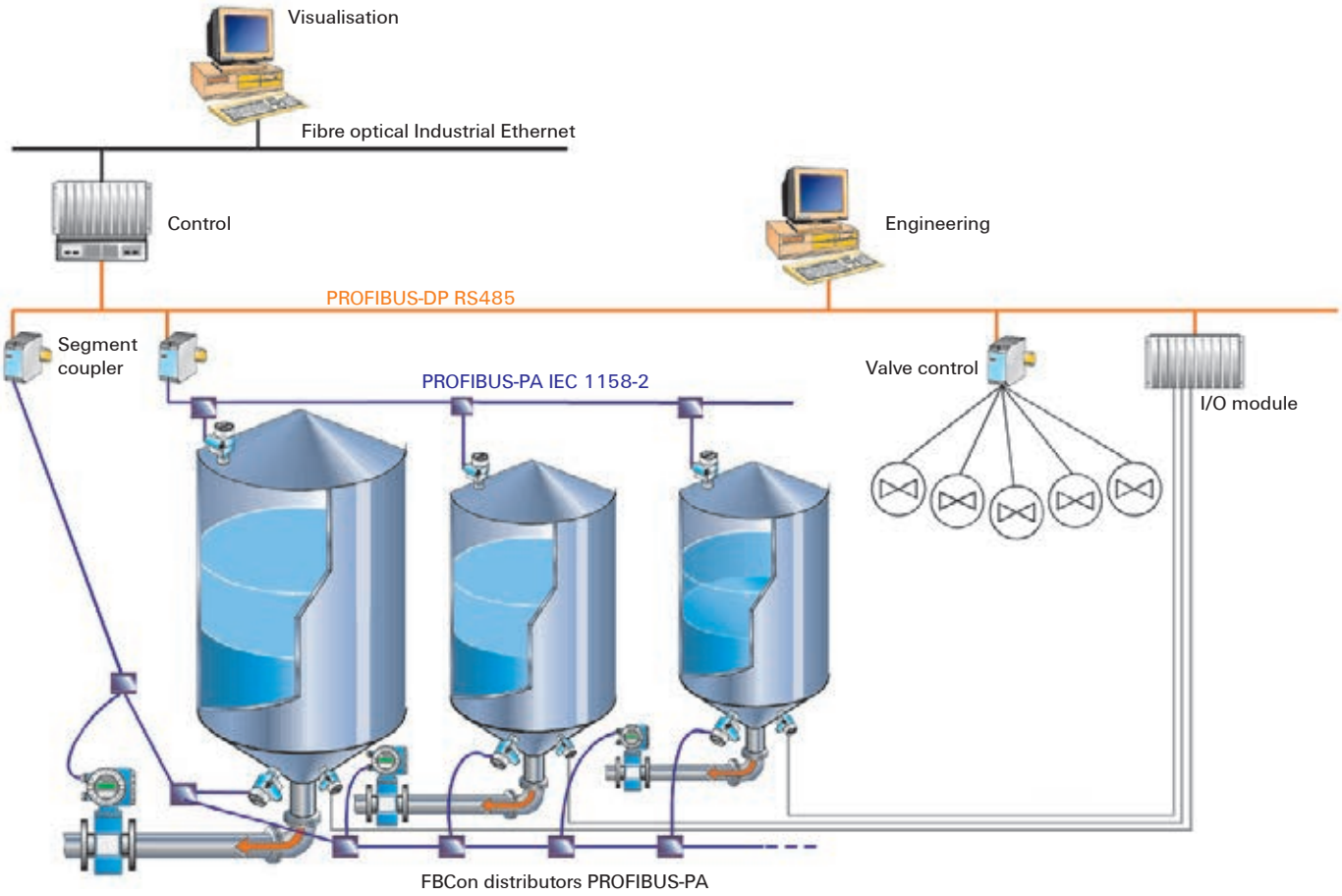

Product coding

The FBCon family of distributors includes various forms. The product name indicates the respective features as follows:

FBCon	Field Bus Connection
PA	PROFIBUS-PA Process Automation
DP	PROFIBUS-DP Decentralised Periphery
SS	Stainless Steel
CG	Stainless steel cable gland on stainless steel housing. On standard aluminium housings, the cable gland is nickel-plated brass.
PCG	Plastic Cable Gland
CG/M12	M12 plug-in connector for the stub cables and cable gland for the trunk cable
1way	Number of outgoing stub lines
Limiter	Current limiter: protects the PROFIBUS-PA network in the event of an overload in the stub line
OVP	Surge protection: protects the system in the event of a voltage surge
EX	Approved for potentially explosive areas
ATEX	For explosive atmospheres

The standard distributors are grey. The Ex approved distributors are painted blue.

PROFIBUS-PA distributors are generally equipped with a switch in terminating resistor. In potentially explosive areas, the terminating resistor is manufactured with a separate box. This must be used instead of the right-hand cable gland. In the case of PROFIBUS-DP, an additional external 24 V DC power supply is required. This makes the terminator independent of the last station in the network.

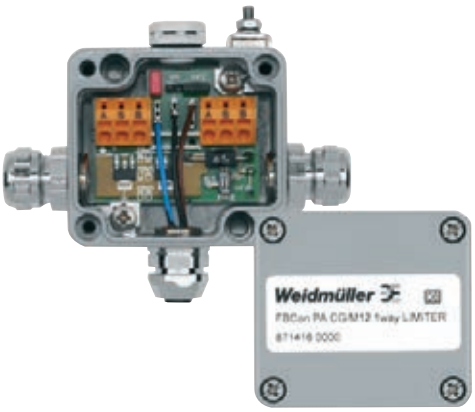

FBCon PA CG/M12 1way Limiter

FBCon SS PCG 1way

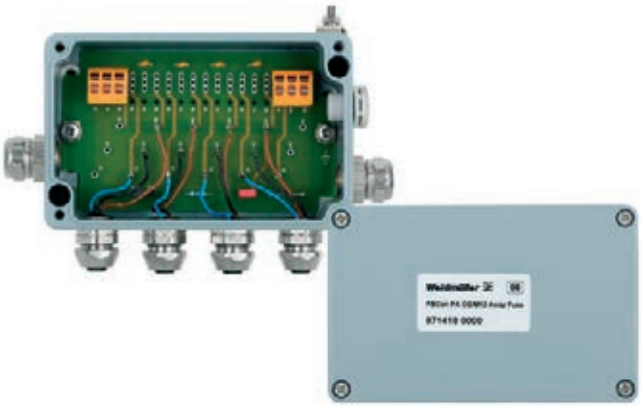

FBCon PA CG 1way Ex

PROFIBUS-DP - cables

PROFIBUS-DPcables
one end without connector

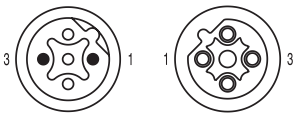

Male Female

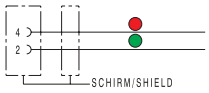

Ordering data

		2-pole
Male, straight		
PUR halogen-free	1.5 m	
PVC/PVC	1.5 m	
Male, angled		
PUR halogen-free	1.5 m	
PVC/PVC	1.5 m	
Female, straight		
PUR halogen-free	1.5 m	
PVC/PVC	1.5 m	
Female, angled		
PUR halogen-free	1.5 m	
PVC/PVC	1.5 m	
Note		

Type	Order No.
SAIL-M12G-PB-1.5D	1873300150
SAIL-M12G-PB-1.5E	1058530150
SAIL-M12W-PB-1.5D	1061970150
SAIL-M12W-PB-1.5E	1062340150
SAIL-M12BG-PB-1.5D	1873320150
SAIL-M12BG-PB-1.5E	1058540150
SAIL-M12BW-PB-1.5D	1062300150
SAIL-M12BW-PB-1.5E	1062370150
Other versions on request	

Standard cable lengths

All cables listed under the ordering data have a length of 1.5 metres. The last four ordering digits must be changed when ordering other standard cable lengths.

1.5 m	xxxxxx0150
3.0 m	xxxxxx0300
5.0 m	xxxxxx0500
10.0 m	xxxxxx1000

Technical data

Sheathing colour	violet
Protection degree	IP 67
Wire cross section	PUR 0.24 mm² / PVC 0.34 mm²
Contact surface	Gold-plated
Temperature range of housing	-25...+85 °C

Chapter W includes additional technical specifications for the cable

Dimensioned drawing

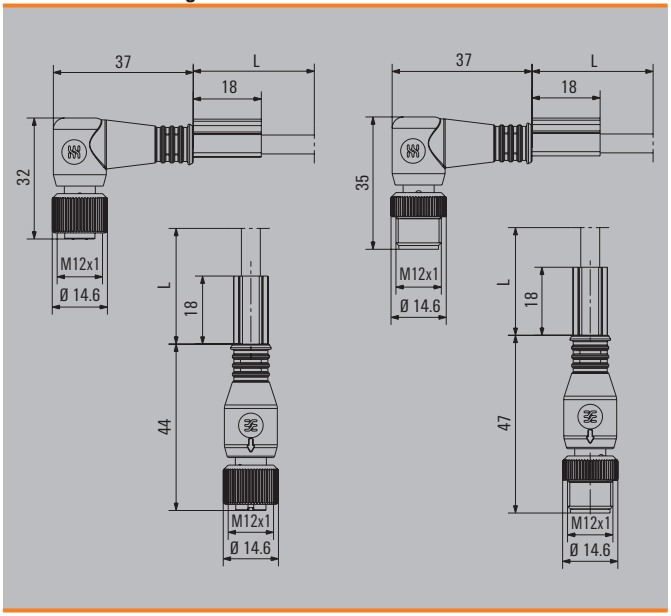

PROFIBUS-DP cables
Connecting cables

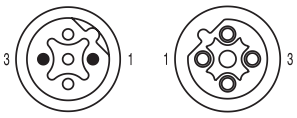

Male Female

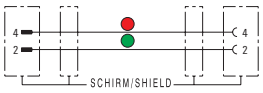

Ordering data

		2-pole
Male, straight - Female, straight		
PUR halogen-free	1.5 m	
PVC/PVC	1.5 m	
Male, straight - Female, angled		
PUR halogen-free	1.5 m	
PVC/PVC	1.5 m	
Male, angled - Female, angled		
PUR halogen-free	1.5 m	
PVC/PVC	1.5 m	
Note		

Type	Order No.
SAIL-M12GM12G-PB-1.5D	**1873310150**
SAIL-M12GM12G-PB-1.5E	**1058570150**
SAIL-M12GM12W-PB-1.5D	**1062310150**
SAIL-M12GM12W-PB-1.5E	**1062380150**
SAIL-M12WM12W-PB-1.5D	**1062330150**
SAIL-M12WM12W-PB-1.5E	**1062400150**
Other versions on request	

Standard cable lengths

All cables listed under the ordering data have a length of 1.5 metres. The last four ordering digits must be changed when ordering other standard cable lengths.	1.5 m	xxxxxx0150
	3.0 m	xxxxxx0300
	5.0 m	xxxxxx0500
	10.0 m	xxxxxx1000

Technical data

Sheathing colour	violet
Protection degree	IP 67
Wire cross section	PUR 0.24 mm² / PVC 0.34 mm²
Contact surface	Gold-plated
Temperature range of housing	-25...+85 °C

Chapter W includes additional technical specifications for the cable

Dimensioned drawing

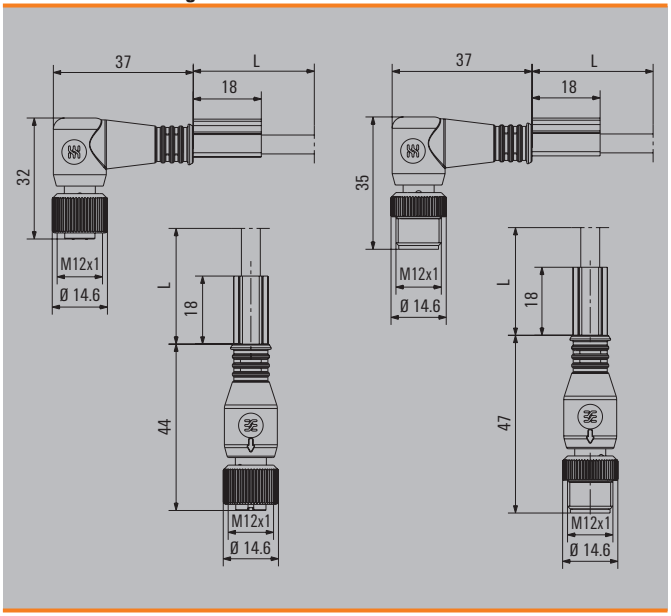

PROFIBUS-DP bulk lengths

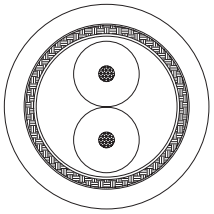

Technical data

Assembly		
Wire	Conductor: 19-wire strands copper shiny, AWG 24, 0.64 mm Ø nominal Insulation: PE foam, 2.55 mm Ø nominal	
Pair	2 wires according to 3.2.1 (red, green) laid as a pair, 5.1 mm Ø nominal	
Interior sheathing	Coil-filling interior sheathing, 5.3 mm Ø nominal	
Shield	a) Overlapping aluminium film, 6.1 mm Ø nominal b) Braided tin-plated copper, coverage approx. 65%, 6.1 Ø nominal	
Outer cladding	TPE-U free from halogens, 8.0 +/- 0.4 mm	
Electrical characteristics at 20 °C		
Conductor resistance	< 84.0 Ω/km	
Insulation resistance	> 1 GΩ ● km	
Operational capacity	< 35 nF/km	
Characteristic impedance	9.6 Khz (RW)	300 Ω
	38.4 Khz (RW)	185 +/- 20 Ω
	3-20 Mhz	150 +/- 15 Ω
Attenuation	9.6 Khz	3 dB/km
	38.4 Khz	5 dB/km
	4 Mhz	26 dB/km
	16 Mhz	55 dB/km
Test voltage (50 Hz, 1 min.)	Wire/wire	0.5 kV_{eff}
	Wire/shield	0.5 kV_{eff}
Mechanical and thermal characteristics		
Temperature range	Stationary	-40 °C to +70 °C
	Moving	-20 °C to +60 °C
Min. permitted bending radius	Once	7.5 x d
	Multiple	15 x d
Max. tensile load resistance	Static	50 N/mm²
	Dynamic	20 N/mm²
Suitable for dragline cable carriers	Yes	
Halogen-free	Yes	

Note

Ordering data

	Type	Order No.
Metre goods	SAIH-PB-2X0.24-PUR	1232620000

Note

PROFIBUS-DP bulk lengths

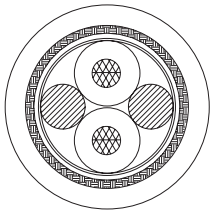

Technical data

Assembly		
Wire	Conductor: copper wire, without insulation, AWG 22, 0.64 mm Ø nominal Insulation: PE foam, 2.55 mm Ø nominal	
Pair	2 wires according to 4.1 (red, green) to pair stranded, 5.1 mm Ø nominal	
Interior sheathing	Plastic foil, 5.2 mm Ø nominal	
Shield	a) AL foil, 5.4 mm Ø nominal b) Braiding tin-plated copper, coverage approx. 60 %, 6.0 mm Ø nominal	
Outer cladding	PVC YM, 7.8 +/- 0.2 mm Ø nominal	
Electrical characteristics at 20 °C		
Conductor resistance	< 55 Ω/km	
Insulation resistance	> 1 GΩ ● km	
Operational capacity	30 pF/m nominal	
Characteristic impedance	9.6 Khz (RW)	270 Ω
	38.4 Khz (RW)	185 Ω
	3-20 Mhz	150 +/- 15 Ω
Attenuation	9.6 Khz	2.2 dB/km
	38.4 Khz	3.4 dB/km
	100 Khz	4.5 dB/km
	1 Mhz	11.5 dB/km
	3 Mhz	18.2 dB/km
	10 Mhz	33.2 dB/km
	20 Mhz	48.0 dB/km
Test voltage (50 Hz, 1 min.)	Wire/wire	1.5 kV_{eff}
	Wire/shield	1.5 kV_{eff}
Mechanical and thermal characteristics		
Temperature range	Stationary	-40 °C to +70 °C
	Moving	-20 °C to +70 °C
Min. permitted bending radius	Once	9 x d
	Multiple	18 x d
Max. tensile load resistance	Static	50 N/mm²
	Dynamic	20 N/mm²
Suitable for dragline cable carriers	No	
Halogen-free	No	

Note

Ordering data

	Type	Order No.
Metre goods	SAIH-PB-2X0.34-PVC	1933640000

Note

Mounts behind wall PROFIBUS DP
B-coded, shielded

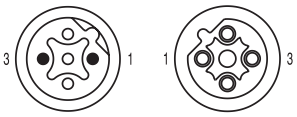

Male **Female**

M12 built-in connector

Male, straight

M12 built-in connector

Female, straight

Technical data

Cable gland	PG9, Mounts behind wall	PG9, Mounts behind wall
Housing base material	Zinc diecast, nickel-plated	Zinc diecast, nickel-plated
Contact socket diameter	M12	M12
Core cross-section	0.25 mm²	0.25 mm²
Rated current	4 A	4 A
Rated voltage	250 V	250 V
Temperature range of housing	-20...+60 °C	-20...+60 °C
Protection degree	IP 68 (when screwed in)	IP 68 (when screwed in)
Contact surface	gold-plated	gold-plated
Sheath material	PUR halogen-free	PUR halogen-free
Tightening torque	1 Nm (to housing)	1 Nm (to housing)

Note

Ordering data

PUR halogen-free	0.5 m
PUR halogen-free	1m
PUR halogen-free	2 m
PUR halogen-free	5 m

Note

Type	2-pole Order No.
SAIE-M12S-PB-0.5U HW	1279490050
SAIE-M12S-PB-1.0U HW	1279490100
SAIE-M12S-PB-2.0U HW	1279490200
SAIE-M12S-PB-5.0U HW	1279490300

Other versions / Lengths on request

Type	2-pole Order No.
SAIE-M12B-PB-0.5U HW	1279480050
SAIE-M12B-PB-1.0U HW	1279480100
SAIE-M12B-PB-2.0U HW	1279480200
SAIE-M12B-PB-5.0U HW	1279480300

Other versions / Lengths on request

Dimensioned drawing

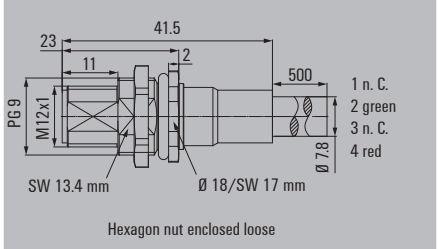

Dimensioned drawing

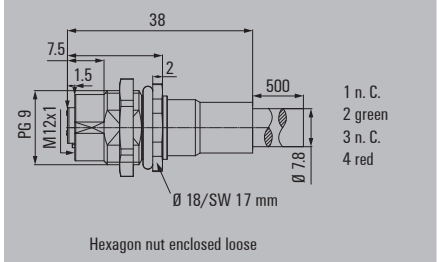

Tension clamp connection M12, stainless steel B-coded

SAIS / SAIB VA

straight

Ordering data

Male		Type	QTY	Order No.
	5-pole. PG 9	SAIS 5/9-VA-B-COD	1	1920720000
Socket				
	5-pole. PG 9	SAIB 5/9-VA-B-COD	1	1920730000
Note				

Technical data

Type of connection	Tension clamp connection
Housing main material	1.4404/316L
Contact tube diameter	M12
Cable diameter	6...8 mm (PG9)
Wire cross-section, min. / max.	0.25...0.5 mm²
Rated current	4 A
Rated voltage	125 V
Temperature range of housing	-25...+85 °C
Protection degree	IP 69K
Contact surface	Gold-plated
Note	PB = PROFIBUS (B-COD)Torque, see E.12

Dimensioned drawing

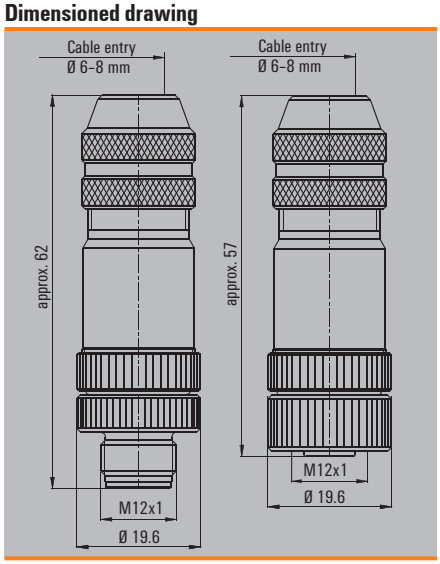

PB = PROFIBUS (B-COD)Torque, see E.12

Screw connection M12, metal (EMC)
B-coded

Industrial Ethernet

SAISM / SAIBM

straight

SAISW / SAIBW

Angled

Ordering data

Male		Type	Qty.	Order No.	Type	Qty.	Order No.
	5-pole. PG 9	SAISM 5/8S M12 5P B-COD	1	1784790000	SAISW-M-5/8 M12 B-COD	1	1944570000
Socket							
	5-pole. PG 9	SAIBM 5/8S M12 5P B-COD	1	1784780000	SAIBW-M-5/8 M12 B-COD	1	1944580000
Note							

Technical data

Type of connection	Screw connection	Screw connection
Housing main material	CuZn	CuZn
Contact tube diameter	M12	M12
Cable diameter	6...8 mm (PG9)	6...8 mm (PG9)
Wire cross-section, min. / max.	0.14...0.75 mm²	0.14...0.75 mm²
Rated current	4 A	4 A
Rated voltage	125 V	125 V
Temperature range of housing	-25...+85 °C	-25...+85 °C
Protection degree	IP 67	IP 67
Contact surface	Gold-plated	Gold-plated
Note	Torque, see E.12	Torque, see E.12

Torque, see E.12

Dimensioned drawing

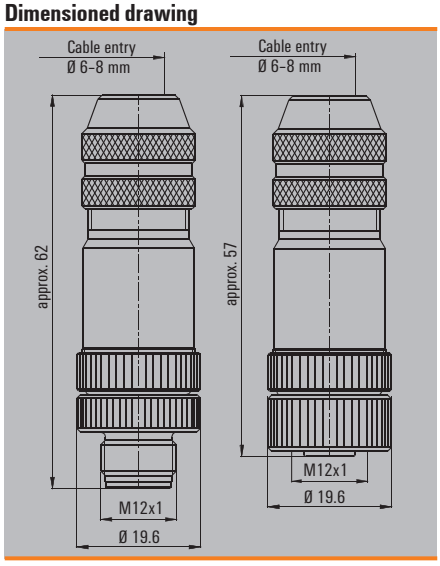

Dimensioned drawing

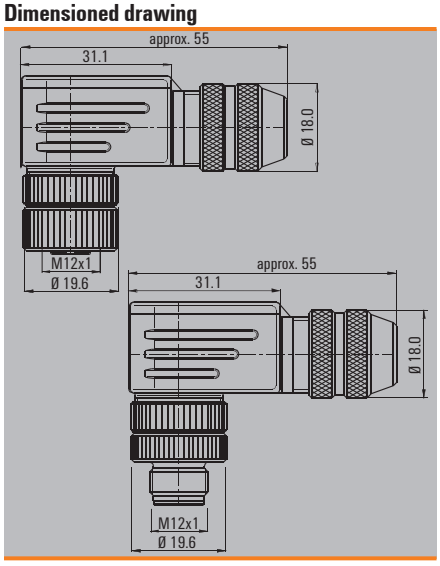

IDC connection
B-coded

Industrial Ethernet

SAIS / SAIB

straight

Ordering data

Male		Type	Qty.	Order No.
	3-pole. PG 9	SAIS-3-IDC-M12B-COD	1	1864730000
Socket				
	3-pole. PG 9	SAIB-3-IDC-M12B-COD	1	1864740000
Note				

Technical data

Type of connection	Insulation displacement connection
Housing main material	CuZn
Contact tube diameter	M12
Cable diameter	7...8.8 mm
Wire cross-section, min. / max.	0.34...0.75 mm²
Rated current	4 A
Rated voltage	32 V
Temperature range of housing	-25...+85 °C
Protection degree	IP 67
Contact surface	tinned
Note	PB = PROFIBUS (B-COD) IE = Industrial Ethernet (D-COD)

Dimensioned drawing

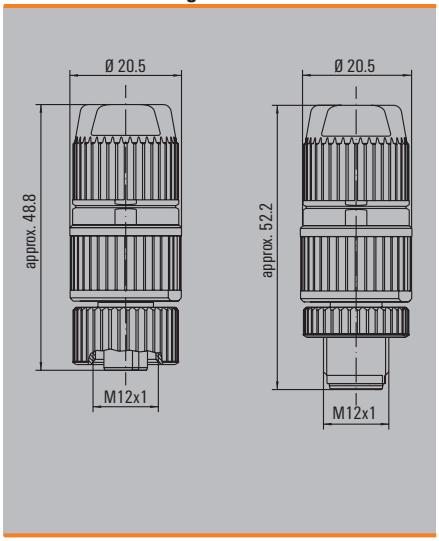

PB = PROFIBUS (B-COD)
IE = Industrial Ethernet (D-COD)

Sub-D

This compact connector provides a convenient bus connection for all standardised PROFIBUS-DP devices. A data transmission rate of max. 12 Mbps is possible. An additional Sub-D connector on top of the plug enables analysis/programming devices to be connected without modifying the wiring.

The 9-pin sub-D connector is available in four versions:

1. without terminating resistor
2. with built-in terminating resistor
3. with switch in terminating resistor and connection for programming unit via IDC connection
4. with switch in terminating resistor and connection for programming unit via tension clamp connection.

- T-piece functions
- Good shield contact
- Ample space for connecting the bus cable
- Cable entry can be closed off with blanking panel
- Fully insulated housing
- Reliable strain relief

PB-DP SUB-D

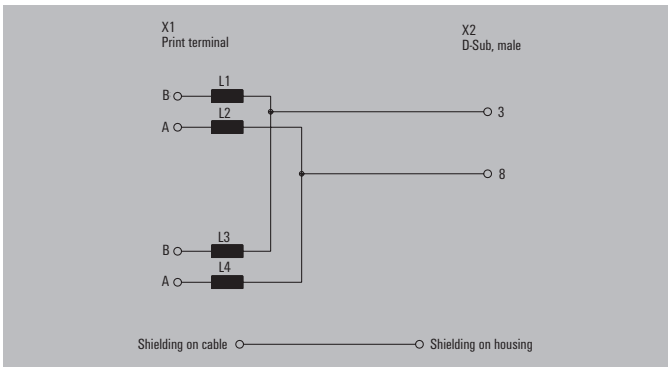

Technical data

Data transmission rate		max. 12 Mbps
ESD		protection to IEC 801-2
Operating temperature	°C	0 ... 60
Storage temperature	°C	-25 ... +80
Ingress protection class		IP 40
Dimensions (LxWxH)	mm	64.6 x 47.5 x 16
Housing material		PC UL 94 V-1
Plug-in connector		sub-D 9-pin
Cable connection		2 No. horizontal
Cable diameter mm	mm	4.5 ... 8
Single conductor cross-section	mm^2	rigid max. 1.5
		flexible max. 1.0
Type of connection	Screw	8395500000 and 8460860000
	IDC	1916980000
	Tension clamp	1934200000
Note		

Ordering data

Type	Qty.	Order No.
PB-DP SUB-D	1	**8395500000**

Sub-D

PB-DP SUB-D TERM

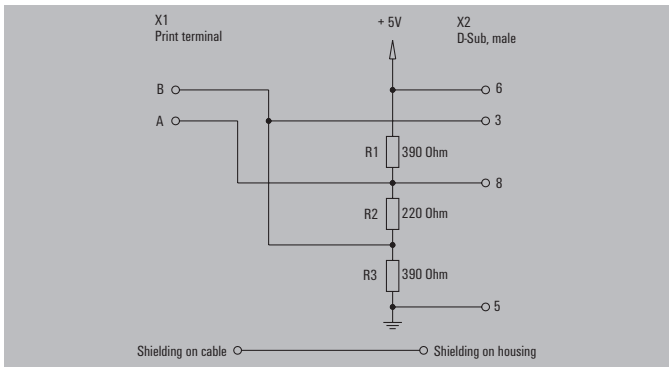

Ordering data

Type	Qty.	Order No.
PB-DP SUB-D TERM	1	8460860000

PB-DP SUB-D IDC/ZF TERM PS

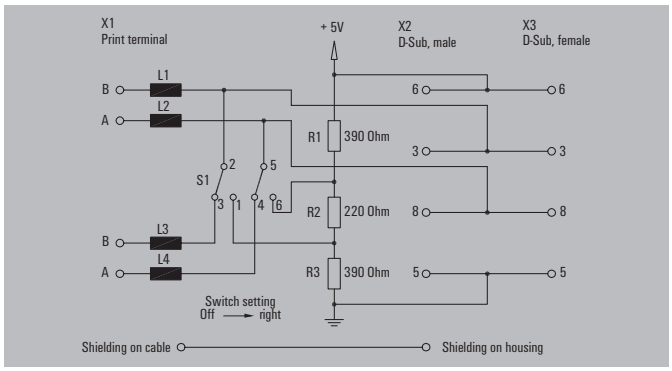

Ordering data

Type	Qty.	Order No.
PB-DP SUB-D IDC TERM PS	1	1919680000
PB-DP SUB-D ZF TERM PS	1	1934200000

PROFIBUS Sub-D connector with M12 (90°)

Weidmüller's new Sub-D product line features fully shielded connector variants that enable direct tapping with M12 cables. This allows you to avoid the types or errors that often occur when installing similar connectors with screw connections. The increased contact reliability of the Sub-D connectors more than compensates for the cost of the extra M12 connectors.

Special features:

- Complete shielded housing
- Compact housing for small places
- Connection without any mistakes because of the M12 connector
- 100 % certified components

PB-DP SUB-D M12 TERM

PROFIBUS-Connector 90° M12 with switch, without programming connector

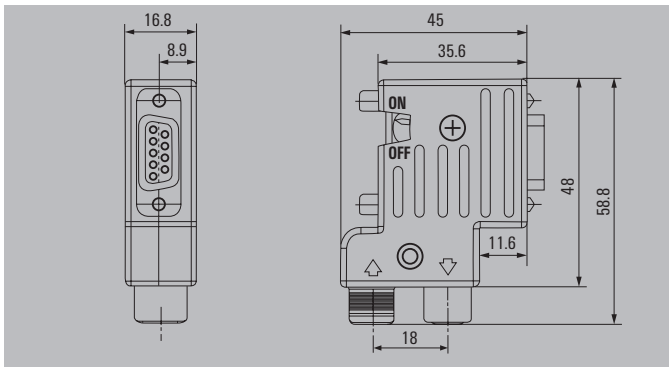

Technical data

Data rate	acc. to PROFIBUS Specification, 12 Mbit/s
Connector pinning	acc. to PROFIBUS Specification
PROFIBUS DP connector	D-Sub 9-pole, male
PROFIBUS DP program connector	D-Sub 9-pole, female
PROFIBUS cable connector	M12 B coded, male + female, Pin 2 and 4, connected, Cable output: M12 female, Cable entry: M12 male
Mechanical lifetime	200 connections
Temperature range	-20 °C to +70 °C
Permissible humidity	Max. 75 % at +25 °C, non-condensing
Ingress protection class	IP 30
Housing material	ZnAl
D-Sub screw connection	UNC 4-40

Note

Ordering data

Type	Qty.	Order No.
PB-DP SUB-D M12 TERM	1	1140650000

PROFIBUS Sub-D connector with M12 (90°)

PB-DP SUB-D M12 TERM PS

PROFIBUS-Connector 90° M12 with switch, with programming connector

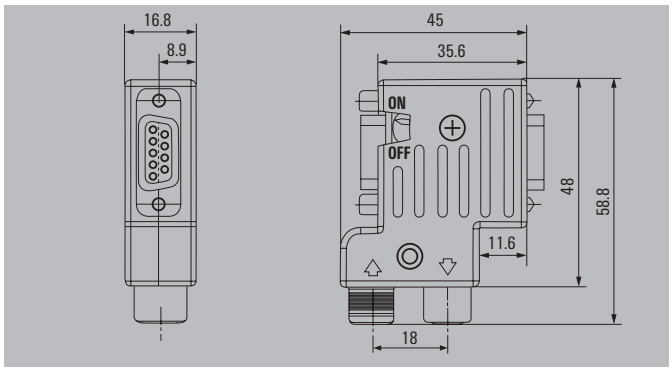

Ordering data

Type	Qty.	Order No.
PB-DP SUB-D M12 TERM PS	1	1140640000

PROFIBUS Sub-D Connector with tension clamp connection (35°)

The new Sub-D Family from Weidmüller offers a fully shielded version.

Special features:

- Completely shielded housing
- Compact design for use in small spaces

PB-DP SUB-D ZF35TERM

PROFIBUS-Connector 35° with switch, without programming connector

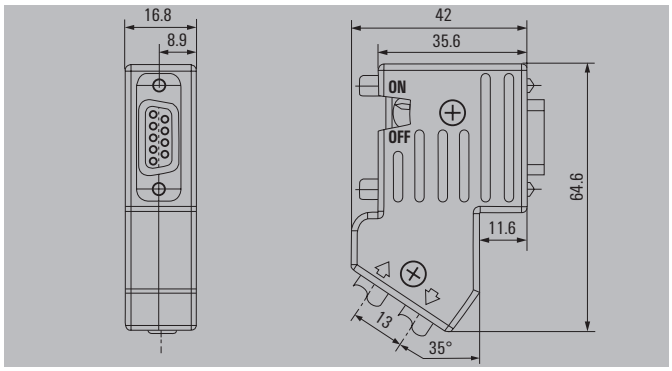

Technical data

Data rate	acc. to PROFIBUS Specification, 12 Mbit/s
Connector pinning	acc. to PROFIBUS Specification
PROFIBUS DP connector	D-Sub 9-pole, male
PROFIBUS DP program connector	D-Sub 9-pole, female
PROFIBUS cable connector	Tension clamp
Mechanical lifetime	200 mating cycles
Temperature range	-20 °C to +70 °C
Permissible humidity	Max. 75 % at +25 °C, non-condensing
Ingress protection class	IP 30
Housing material	ZnAl
D-Sub screw connection	UNC 4-40

Note

Ordering data

Type	Qty.	Order No.
PB-DP SUB-D ZF35TERM	1	1173220000

PROFIBUS Sub-D Connector with tension clamp connection (35°)

PB-DP SUB-D ZF35TERM PS

PROFIBUS-Connector 35° with switch, with programming connector

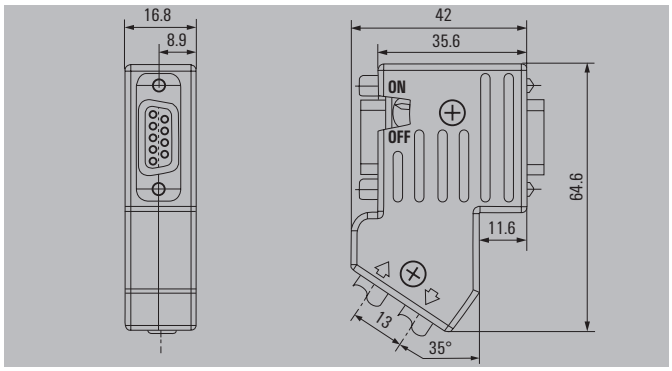

Ordering data

Type	Qty.	Order No.
PB-DP SUB-D ZF35TERM PS	1	1173240000

PROFIBUS Sub-D Connector with tension clamp connection (90°)

The new Sub-D Family from Weidmüller offers a fully shielded Version.

Special features:

- Completely shielded housing
- Compact design for use in small spaces

PB-DP SUB-D ZF

PROFIBUS-Connector 90° without switch, without programming connector

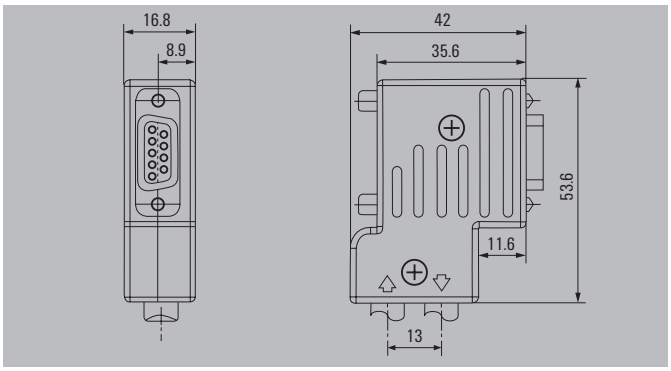

Technical data

Data rate	acc. to PROFIBUS Specification, 12 Mbit/s
Connector pinning	acc. to PROFIBUS Specification
PROFIBUS DP connector	D-Sub 9-pole, male
PROFIBUS DP program connector	D-Sub 9-pole, female
PROFIBUS cable connector	Tension clamp
Mechanical lifetime	200 mating cycles
Temperature range	-20 °C to +70 °C
Permissible humidity	Max. 75 % at +25 °C, non-condensingg
Ingress protection class	IP 30
Housing material	ZnAl
D-Sub screw connection	UNC 4-40

Note	

Ordering data

Type	Qty.	Order No.
PB-DP SUB-D ZF	1	1161890000

PROFIBUS Sub-D Connector with tension clamp connection (90°)

PB-DP SUB-D ZF TERM

PROFIBUS-Connector 90° with switch, without programming connector

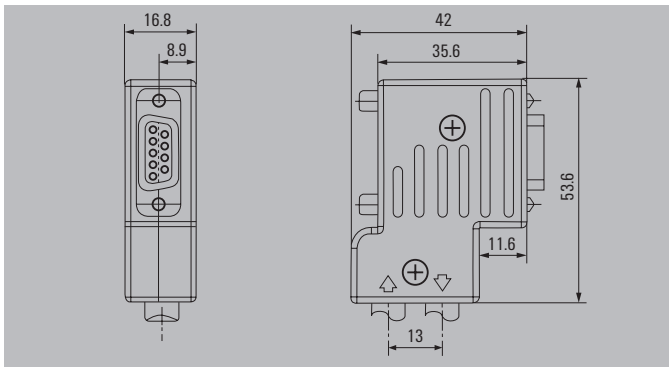

Ordering data

Type	Qty.	Order No.
PB-DP SUB-D ZF TERM	1	1161870000

PB-DP SUB-D ZF TERM PS

PROFIBUS-Connector 90° with switch, with programming connector

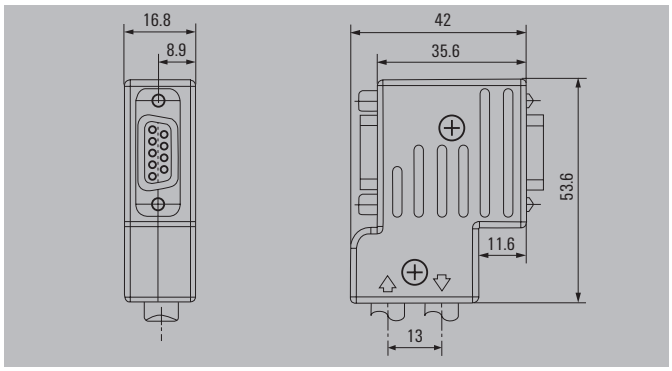

Ordering data

Type	Qty.	Order No.
PB-DP SUB-D ZF TERM PS	1	1161880000

PROFIBUS-DP distributors

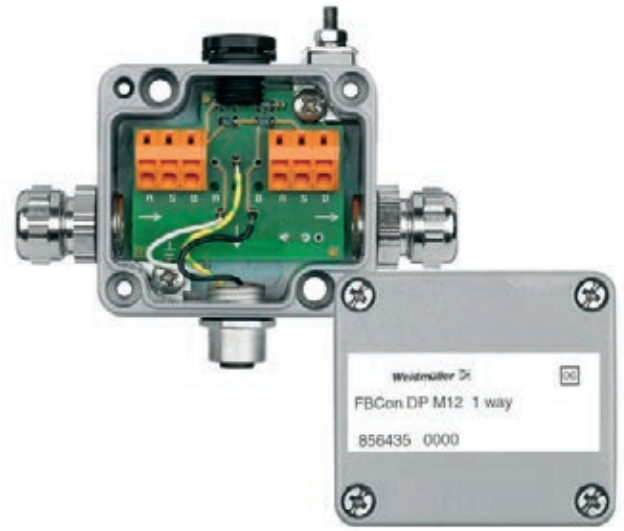

PROFIBUS-DP distributor

The PROFIBUS-DP topology is a line structure. The spur (T-distributor) connects the individual field devices or remote I/Os to the bus cable. The length of the spur cable depends on the transmission rate and should be as short as possible. The total of all spur lengths for transmission rates up to 1.5 MBaud may not exceed max. 6.6 m. The trunk cable passes through an EMC cable gland into an aluminium or stainless steel enclosure where it is connected to a tension clamp terminal. The spur line to the device is connected using a B-coded M12 socket or an EMC cable gland. Terminating resistors must be wired onto the start and end of the PROFIBUS-DP network. The Terminator modules can take care of this task. The electrically isolated 24 V DC power supply for the bus terminator is routed into the cable gland on the right side. The housing features a pressure-compensation mechanism that counters the effects of climatic fluctuations. The guidelines issued by the PROFIBUS user organisation must be observed.

PROFIBUS-DP

Technical data

Operating temperature	–25 °C to 55 °C
Ingress protection class	IP 66
Enclosure material	High grade aluminium alloy (AL – SI 12)
Finish	Painted RAL 7001
PROFIBUS-DP connection	Tension clamp terminals 0.5 – 1.5 mm²
Cable entry	Cable gland M16
Cable gland clamping range	5.5 – 9.5 mm
Contact surface	M12 plug/socket CuZnAu
Transmission rate	Max. 1.5 MBaud
Power supply bus connection	Bus terminator 24 VDC +/–10 %
Trunk cable via cable gland	

Installation advice

Torques	
M16 cable gland at enclosure	6.0 Nm
Union nut, M16 cable gland	4.0 Nm
Enclosure cover	1.8 – 2.0 N
External earthing cable	1.8 – 2.0 Nm
Adaptor/stud cable	0.5 Nm

Pin assignment

Pin no.	Connection	Wire colour
Pin 1	unassigned	
Pin 2	RxDx/TxD-N / A-wire	green
Pin 3	unassigned	
Pin 4	RxDx/TxD-N / B-wire	red
Pin 5	shield	
Cable gland	shield	

Socket B-coded

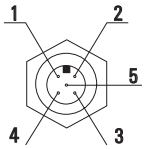

1-channel distributor

Cable gland

Ordering data

Type	Cable gland	QTY	Order No.
Aluminium housing			
FBCon DP CG 1way	branch line CG	1	**8564340000**
Stainless steel enclosure			
FBCon SS DP PCG 1way	all connections PCG	1	**8714260000**

CG = brass cable gland
PCG = plastic cable gland

Dimensioned drawing

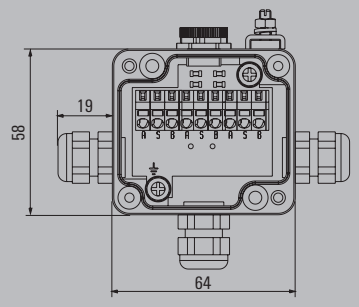

Wiring diagram

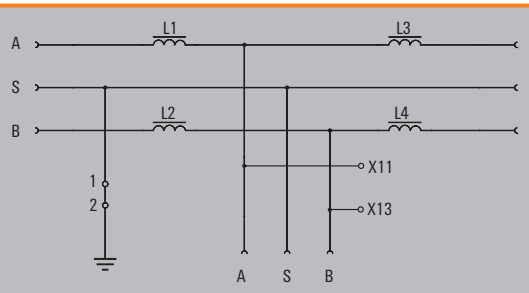

1-channel distributor

M12 connection

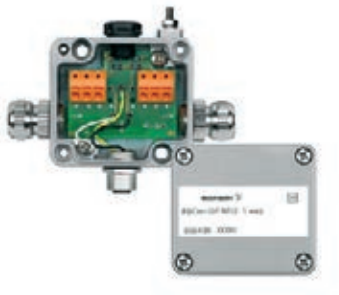

Ordering data

Type	Cable gland	QTY	Order No.
Aluminium housing			
FBCon DP M12 1way	branch line M12	1	**8564350000**
Stainless steel enclosure			
FBCon SS DP M12 1way	branch line M12	1	**8714270000**

CG = brass cable gland
PCG = plastic cable gland

Dimensioned drawing

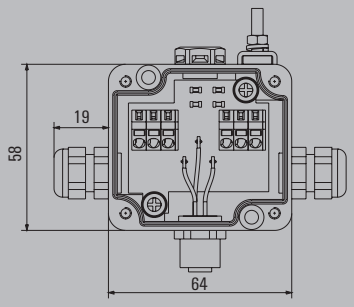

Wiring diagram

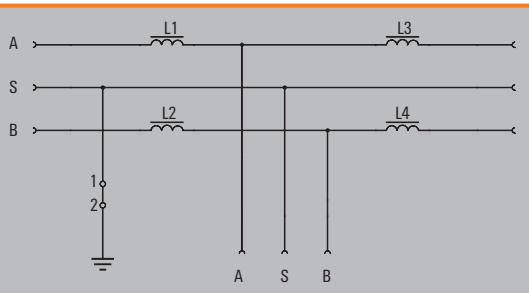

PROFIBUS-DP - FBCon T-distributor

Terminator

Cable gland

Terminator

M12 connection

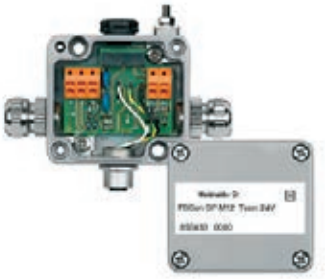

Ordering data

Type	Cable gland	QTY	Order No.
Aluminium housing			
FBCon DP CG Term 24V	branch line CG	1	**8564290000**
Stainless steel enclosure			
FBCon SS DP PCG Term 24V	all connections PCG	1	**8714240000**

CG = brass cable gland
PCG = plastic cable gland

Ordering data

Type	Cable gland	QTY	Order No.
Aluminium housing			
FBCon DP M12 Term 24V	branch line M12	1	**8564330000**
Stainless steel enclosure			
FBCon SS DP M12 Term 24V	branch line M12	1	**8714250000**

Dimensioned drawing

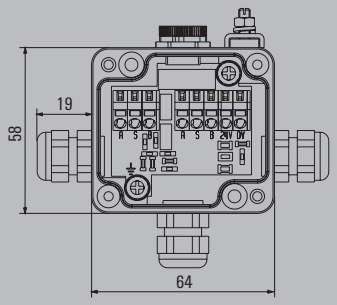

Dimensioned drawing

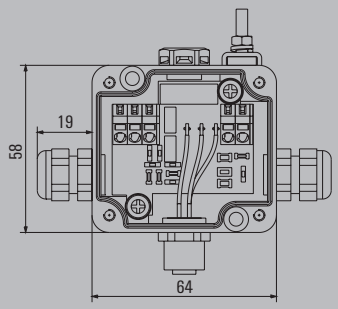

Wiring diagram

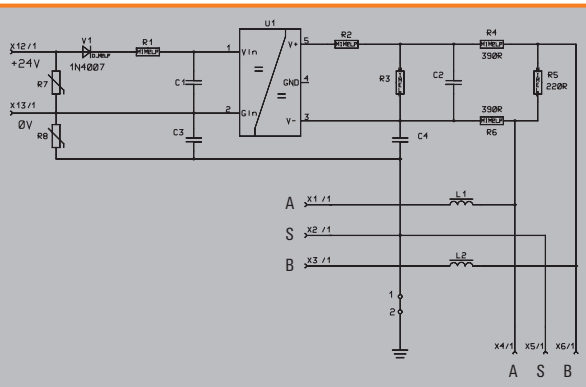

Wiring diagram

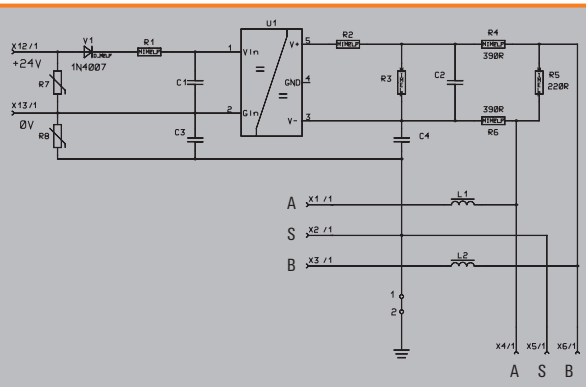

PROFIBUS-DP IP 20 T-distributor

The distributor for PROFIBUS-DP enables the user to connect it conveniently in the electrical cabinet. It can be mounted on TS 32/35 rails and used to connect standardised PROFIBUS-DP lines. Spur cables can also be connected. Please note that spur cables should be kept as short as possible. Part No. 8788580000 has a 9-pin Sub-D socket for connecting analysis/programming devices.

- T-piece functions
- Good shield contact
- Ample space for connecting the bus cable
- TS 32/35 terminal rail mounting
- Standardised Sub-D connection for PROFIBUS-DP

RS PB-DP T

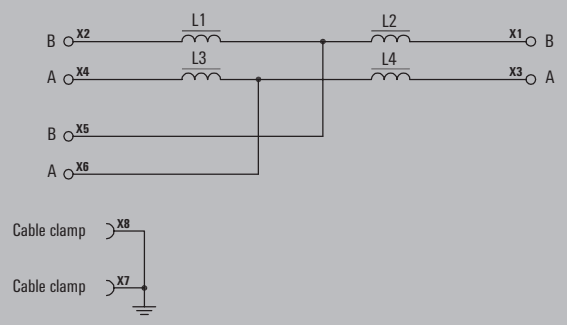

RS PB-DP T SUB-D

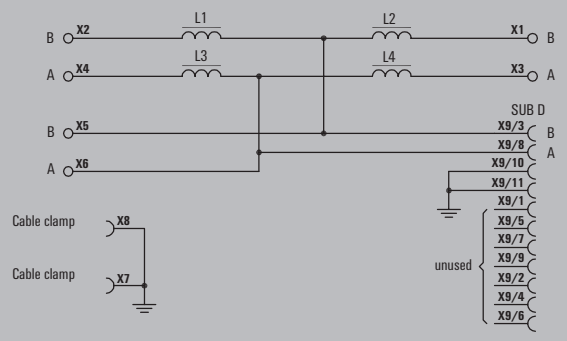

Technical data

Data transmission rate		max. 1.5 Mbps (with max. 6.6 m spur line) max. 12 Mbps (no spur lines)
Operating temperature	°C	0 ... 55
Storage temperature	°C	-25 ... +70
Ingress protection class		IP 20
Dimensions (LxWxH)	mm	70 x 45 x 42
Plug-in connector		sub-D 9-pin
Cable diameter	mm	4.5 ... 8
Single conductor cross-section	mm^2	0.5 ... 2.5
Type of connection		screw

Note

Ordering data

Type	Qty.	Order No.
RS PB-DP T	1	8800040000
RS PB-DP T SUB-D	1	8788580000

The PROFIBUS-PA is an open fieldbus standard (EN 50170, IEC 1158-2, DIN 19245). It was specifically designed for the requirements of process engineering, such as remote powering and intrinsic safety. The PROFIBUS-PA enables operation of several PA sensors and actuators on one bus line.
The devices are powered using twin cable technology, and the transmission of process data is digital.

Integration in the PROFIBUS-DP network is done by means of a segment coupler.

Specific advantages of PROFIBUS-PA:
- Low wiring costs
- Minimal planning costs for the process control system
- Remote interrogation or programming of the field device
- Further development and support by the PROFIBUS User Organisation

Whether for servicing or system modification, the PROFIBUS-PA FB connectors from Weidmüller enable connection or replacement of field devices without interrupting the bus system.

An extensive range of accessories, such as pre-assembled cables are also available.

PROFIBUS-PA cables

PROFIBUS-PA connectors

Profibus PA distributors

PROFIBUS-PAcables
One end without connector

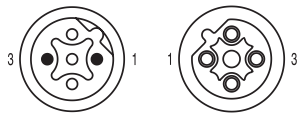

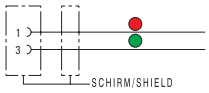

Ordering data

Type		Order No.
Male, straight		
PVC blue	1.0 m	FBCEX PA M12 M 1M **1785150100**
PVC black	1.0 m	FBC PA M12 M 1M **1785120100**
Male, angled		
PVC blue	1.0 m	FBCEX PA M12 MA 1M **1076580100**
PVC black	1.0 m	FBC PA M12 MA 1M **1076540100**
Female, straight		
PVC blue	1.0 m	FBCEX PA M12 FM 1M **1785140100**
PVC black	1.0 m	FBC PA M12 FM 1M **1785110100**
Female, angled		
PVC blue	1.0 m	FBCEX PA M12 FMA 1M **1076520100**
PVC black	1.0 m	FBC PA M12 FMA 1M **1076530100**
Note		

Wall bushing

Ordering data

Type	Length	Qty.	Order No.
SAI-WDF-5P M12 60 mm	60 mm	1	**1819450000**

Standard cable lengths

All cables listed under the ordering data have a length of 1.5 metres. The last four ordering digits must be changed when ordering other standard cable lengths.	1.0 m	xxxxxx0100
	2.0 m	xxxxxx0200
	5.0 m	xxxxxx0500
	10.0 m	xxxxxx1000

Technical data

Sheathing colour	blue (RAL 5015)
Protection degree	IP 67
Core cross-section	1 mm²
Contact surface	gold-plated
Temperature range of housing	-25...+85 °C

Chapter W includes additional technical specifications for the cable

Dimensioned drawing

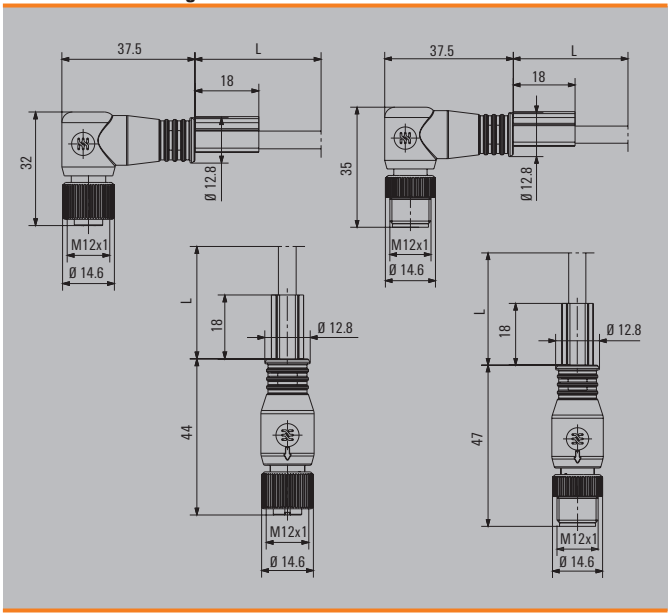

PROFIBUS-PAcables

Connecting line

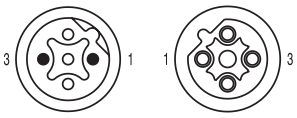

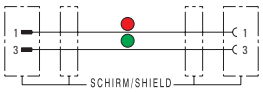

Ordering data

Type		Order No.
Male, straight - Female, straight		
PVC blue	1.0 m	FBCEX PA M12 M-FM 1M **1785130100**
PVC black	1.0 m	FBC PA M12 M-FM 1M **1785100100**
Male, straight - Female, angled		
PVC blue	1.0 m	FBCEX PA M12 M-FMA 1M **1075390100**
PVC black	1.0 m	FBC PA M12 M-FMA 1M **1075620100**
Male, angled - Female, angled		
PVC blue	1.0 m	FBCEX PA M12 MA-FMA 1M **1075410100**
PVC black	1.0 m	FBC PA M12 MA-FMA 1M **1076550100**
Male, angled - female, straight		
PVC blue	1.0 m	FBCEX PA M12 MA-FM 1M **1075450100**
PVC black	1.0 m	FBC PA M12 MA-FM 1M **1075460100**
Note		

Wall bushing

Ordering data

Type	Length	Qty.	Order No.
SAI-WDF-5P M12 60 mm	60 mm	1	**1819450000**

Standard cable lengths

All cables listed under the ordering data have a length of 1.5 metres. The last four ordering digits must be changed when ordering other standard cable lengths.	1.0 m	xxxxxx0100
	2.0 m	xxxxxx0200
	5.0 m	xxxxxx0500
	10.0 m	xxxxxx1000

Technical data

Sheathing colour	blue (RAL 5015)
Protection degree	IP 67
Core cross-section	1 mm²
Contact surface	gold-plated
Temperature range of housing	-25...+85 °C

Chapter W includes additional technical specifications for the cable

Dimensioned drawing

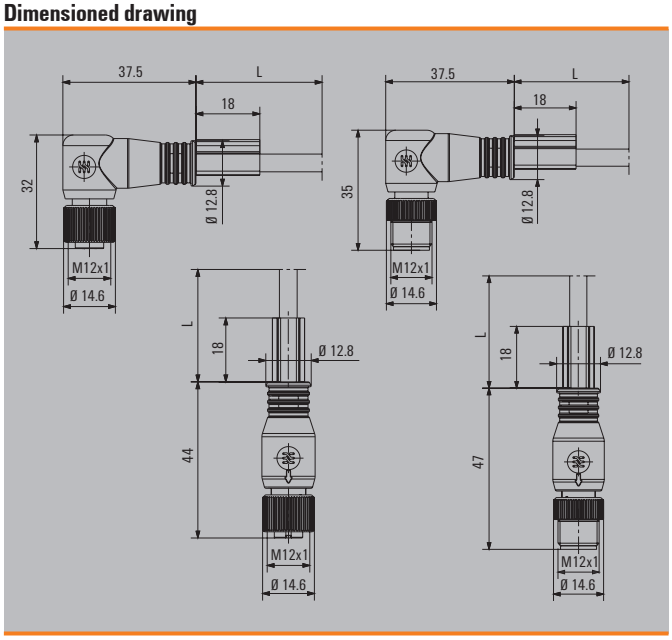

PROFIBUS-PA bulk lengths

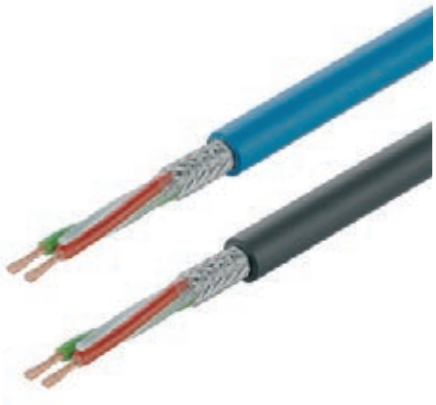

Technical data

PROFIBUS-PA bulk lengths		
Application		• Fieldbus cable for PROFIBUS-PA field networks in accordance with IEC 1158-2 • The cable is suitable for installation in both dry and humid spaces. When used with the black, UV-resistant cladding, it can also be installed outdoors.
General characteristics		None of the materials used for the cables during production are detrimental to paint adhesion **(they are LBS-free).** **LBS** = Materials detrimental to paint adhesion
Assembly		
Conductor		Copper wire, without insulation, 1.0 mm^2, finely stranded
Insulating sleeve		Foam skin (02YS), wire Ø approx. 2.55 mm Wire colours: red and green
Stranding		2 wires with 2 drain wires approx. 1.0 mm Ø stranded
Wrapping		1 layer insulation foil
Shield		Braiding made from tin-plated copper wire, Coverage 85 % ± 5
Outer cladding		PVC, blue RAL 5015 or black Outer diameter: 8.0 mm ± 0.4
Electrical characteristics at 20 °C		
Wire resistance (loop)		max. 44 Ω/km
Insulation resistance		min. 5 GΩ x km
Working capacity at 800 Hz		nom. 52 nF/km
Inductance at 800 Hz		approx. 0.4 mH/km
Characteristic impedance	at 31.25 kHz	100 Ω ± 20 %
	at ≥ 1 MHz	nom. 80 Ω
Wave attenuation	at 39 kHz	max. 0.3 dB/100 m
	at 100 kHz	nom. 0.35 dB/100 m
	at 1 MHz	nom. 1.2 dB/100 m
Signal dispersion speed		nom. 79 %
Coupling resistance at < 30 MHz		max. 250 mOhm/m
Operating voltage (not for three-phase use)		Peak value 100 V
Test voltage	Wire/wire	$U_{eff.}$ 1500 V
	Wire/shield	$U_{eff.}$ 1500 V
Mechanical and thermal characteristics		
Min. bending radius stationary installed / during installation		65 mm
Temperature range during installation		-5 °C to +60 °C
Temperature range stationary installed		-30 °C to +80 °C
Flammability		Flame retardant in accordance with VDE 0482, part 265-2-1 / IEC 60 332-1

Note

Ordering data

Type	Order No.
SAIH-PB-PA-2X1.0-PVC-BL	1232630000
SAIH-PB-PA-2X1.0-PVC-SW	1232640000

Note

Tension clamp connection M12, stainless steel A-coded

SAIS / SAIB VA

straight

Ordering data

Type	QTY	Order No.
Male		
5-pole. PG 9		
SAIS 5/9-VA	1	1920700000
Socket		
5-pole. PG 9		
SAIB 5/9-VA	1	1920710000
Note		

Technical data

Type of connection	Tension clamp connection
Housing main material	1.4404/316L
Contact tube diameter	M12
Cable diameter	6...8 mm (PG9)
Wire cross-section, min. / max.	0.25...0.5 mm²
Rated current	4 A
Rated voltage	125 V
Temperature range of housing	-25...+85 °C
Protection degree	IP 69K
Contact surface	Gold-plated
Note	PB = PROFIBUS (B-COD)Torque, see E.12

Dimensioned drawing

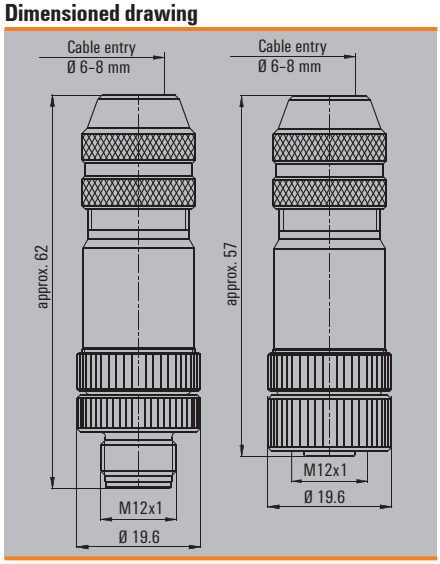

PB = PROFIBUS (B-COD)Torque, see E.12

M12 screw connection, metal (shielded)
A-coded

FBCon / SAIS

straight

SAISW / SAIBW

Angled

Ordering data

Male		Type	Qty.	Order No.	Type	Qty.	Order No.
	4-pole. PG 9	FBCon M12 4P M EMC	1	**9455640000**	SAISW-M-4/8 M12	1	**1803930000**
	5-pole. PG 9	SAIS-M-5/8S M12 5P A-COD	1	**1784740000**	SAISW-M-5/8 M12	1	**1803940000**
Socket							
	4-pole. PG 9	FBCon M12 4P FM EMC	1	**8426220000**	SAIBW-M-4/8 M12	1	**1803910000**
	5-pole. PG 7	SAIB-5/6S M12 5P A-COD	1	**1191020000**			
	5-pole. PG 9	SAIB-M-5/8S M12 5P A-COD	1	**1784750000**	SAIBW-M-5/8 M12	1	**1803920000**
Note		Other versions on request			Other versions on request		

Technical data

Type of connection	Screw connection	Screw connection
Housing main material	CuZn	CuZn
Contact tube diameter	M12	M12
Cable diameter	4...6 mm (PG7)/ 6...8 mm (PG9)	6...8 mm (PG9)
Wire cross-section, min. / max.	0.25...0.75 mm²	0.14...0.5 mm²
Rated current	4 A	4 A
Rated voltage	250 V	125 V
Temperature range of housing	-25...+85 °C	-25...+85 °C
Protection degree	IP 67	IP 67
Contact surface	Gold-plated	Gold-plated
Note	Torque, see E.12	Torque, see E.12

Torque, see E.12

Dimensioned drawing

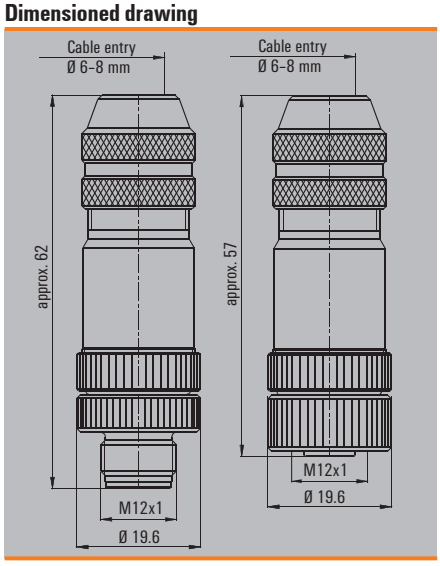

Dimensioned drawing

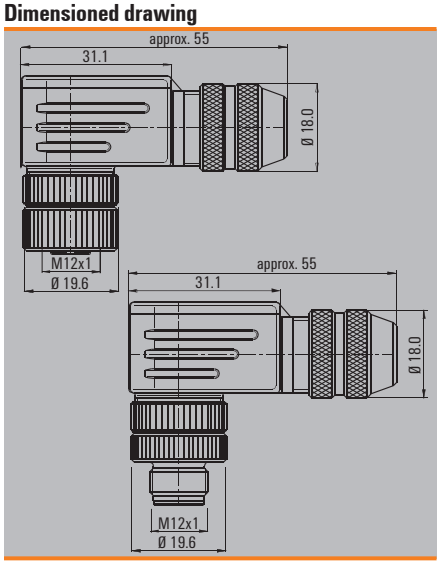

Positioning plug connector

Positioning plug connector

Technical data

No. of poles	4	4/5
Version	pin	pin
Temperature range	-40 °C ... 85 °C	-40 °C ... 85 °C
Housing material	stainless steel (VA)	Cu Zn nickel surface
Connection thread	PG 9	PG 13.5 / M 20
Plug thread	M12	M12
Strand cross-section	0.34 mm^2	0.34 mm^2
Housing class of protection to DIN 40050 IEC 529	IP 67	IP 67
Strand length (fitted with wire-end ferrules)	500 mm	150/300 mm
Nominal current per contact	4 A	4 A
Rated voltage	250 V	125 V 5-pole/250 V 4-pole
Contact surface	gold-plated	CuZnAu
Type of connection	screw	screw
Flammability class to UL-94		V-2
Nominal voltage to VDE standard 0110/ISO Group C		125 V ~ 150 V =
Resistance to creepage		KC 600
Contact resistance to IEC 512 Part 2		≤ 8 mΩ
Insulation resistance to IEC 512 Part 2		≥ 10^{12} Ω
Note		

Ordering data

	Type	Qty.	Order No.
Positioning plug connector PG9 500 mm	SAIE-M12S-4-0.5U-AEH-VA	1	**1861220001**
Adapter PG9 / M20	SAIE-EW-M20/PG9-SW24-VA	1	**1950270000**
Positioning plug connector PG 13.5 150 mm			
Positioning plug connector PG 13.5 300 mm			
Positioning plug connector M 20 150 mm			
Positioning plug connector M 20 300 mm			
Positioning plug connector M 20 300 mm B-coded			
Note			

Type	Qty.	Order No.
POS-4P M12 PG13.5 150mm	1	**9455650000**
POS-4P M12 PG13.5 300 mm	1	**8425910000**
POS-4P M12 M20 150mm	1	**8425930000**
POS-4P M12 M20 300mm	1	**8425940000**
POS-5P M12/M20 300MM	1	**1795500000**

Dimensioned drawing

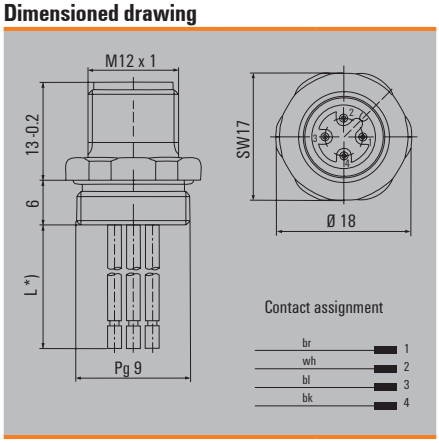

Dimensioned drawing

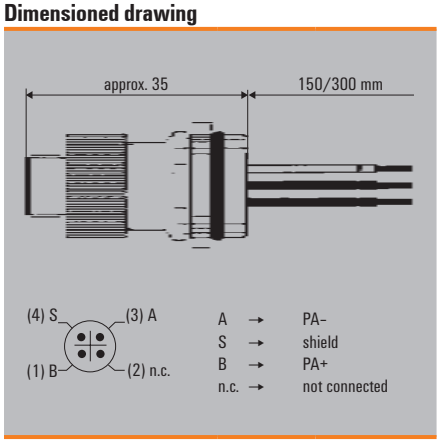

Fitting information

	Torque settings
Set screw	1.8 - 2.0 Nm
Knurled ring	hand-tight
Lock-nut	6.25 Nm

If the device is exposed to vibration, we recommend using a stub cable to isolate the device from the vibration.

FBCon distributors for the industrial market

PROFIBUS-PA T-connector
- **for industrial applications**
- **standard**

The **PROFIBUS-PA** installation products are increasingly used in the:
- food and beverage industry
- process industries and
- chemical industry

The product range offers a wide choice of customer solutions for use in harsh conditions. This includes standard and EX versions of single and multi-way design with M12 plug-in connection or cable glands. Weidmüller offers a solution for almost every application. If you cannot find your solution here, please contact the branch / sales office responsible for you.

PROFIBUS-PA T-connector
standard
- 1, 2, 4, 8-way with EMC cable gland
  Industrial + EX / ATEX
- Optional surge protectio

The **PROFIBUS-PA T-connector** is intended for direct coupling of measuring devices, sensors, actuators, etc.
- IP 66 Ingress protection class
- Modular design
- Uninterruptible bus operation for service situations
- Simple handling
- Low installation costs
- External earth stud
- Pressure equalising element
- EMC cable gland

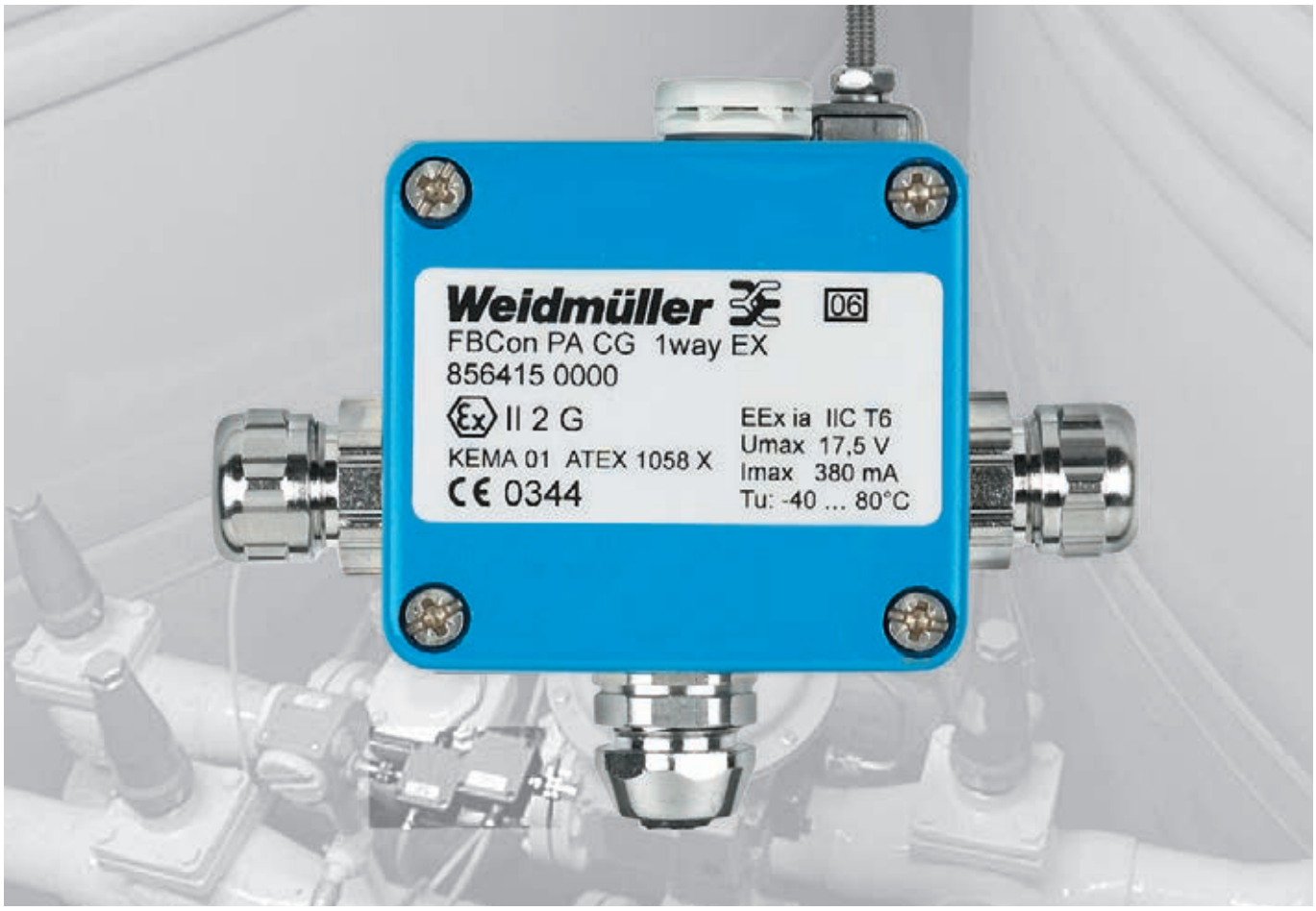

FBCon Fieldbus distributor

PROFIBUS-PA Fieldbus distributor: robust and well-tested

FBCon fieldbus distributors are available in industrial and Ex(ia) versions. They are used for coupling 1-8 field devices or sensors. The connection is made via a spur. The spur is connected by an M12 plug-in connector or directly via an EMC cable gland.
The communication and device powering is handled by a common 2-core wire.
The PROFIBUS-PA distributors normally feature a switchable terminating resistor. For the Ex zone, the terminating resistor is made with a separate box. Current limiting variants help to ensure that the facility can operate smoothly.

Weidmüller offers a comprehensive line of accessories including pre-assembled PROFIBUS-PA cables in the standard lengths, and plug in connectors for a wide variety of applications.

- Fieldbus distributor for PROFIBUS-PA and PROFIBUS-DP
- Standard distributor for use in the safe zone
- Aluminium housing for connecting from 1 to 8 field devices
- Stainless steel distributor for applications in the food processing industry, for connecting from 1 to 8 field devices
- Intrinsically safe (ia) Ex version in aluminium housing for connecting from 1 to 8 field devices
- EMC cable gland for a secure contact with the shielding

Technical data for PROFIBUS-PA standard distributors

Temperature range	
Operating temperature	from –40 °C to 85 °C
Ingress protection class	IP 66
Housing material	High-quality aluminium alloy (AL-Si 12)
Surface	Stove-enamelled RAL 7001
PROFIBUS-PA connection	Tension clamp connection 0.5 - 1.5 mm^2
Cable entry	Cable gland M16
Clamping range	5.5 - 9.5 mm
Measuring device connector M12 x 14-pin	Contacts MS, surface CUZnAu
Note	

Handling information

Torques	
M16 gland to housing	6.25 Nm
M16 union nut on cable gland	4.5 Nm
Housing cover	1.8 - 2.0 Nm
External earth stud	1.8 - 2.0 Nm

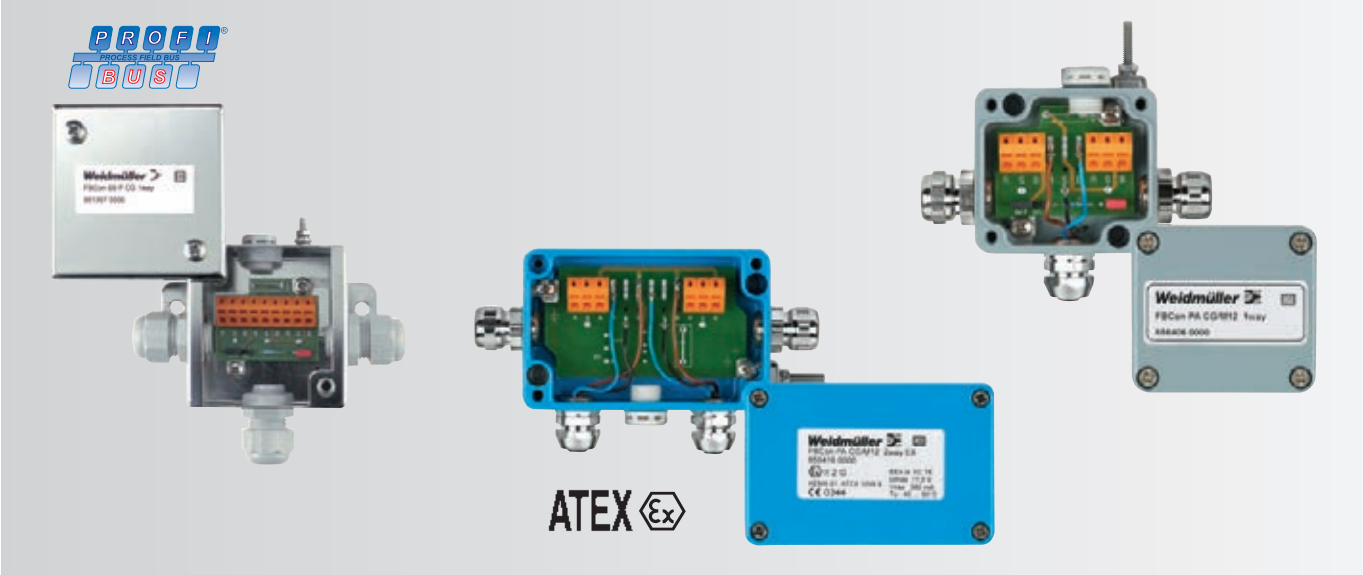

PROFIBUS-PA - FBCon T-distributor

1-channel distributor

Cable gland

Ordering data

Type	Cable gland	QTY	Order No.
Aluminium housing			
FBCon PA CG 1way	branch line CG	1	**8564090000**
Stainless steel enclosure			
FBCon SS CG 1way	branch line CG	1	**8703430000**
FBCon SS PCG 1way	all connections PCG	1	**8613670000**

CG = brass cable gland
PCG = plastic cable gland

Dimensioned drawing

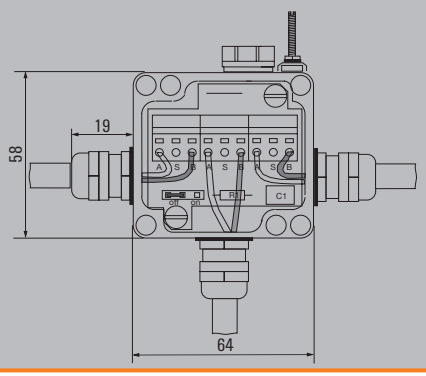

Wiring diagram

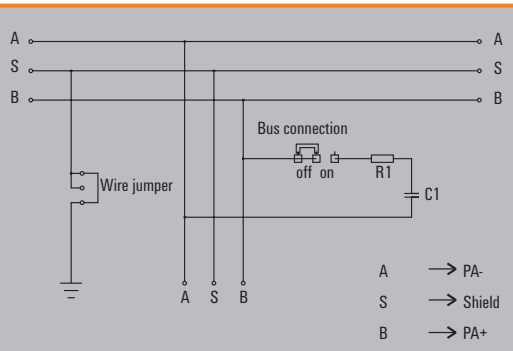

1-channel distributor

M12 connection

Ordering data

Type	Cable gland	QTY	Order No.
Aluminium housing			
FBCon PA CG/M12 1way	branch line M12	1	**8564060000**
Stainless steel enclosure			
FBCon SS CG/M12 1way	branch line M12	1	**8726020000**

CG = brass cable gland
PCG = plastic cable gland

Dimensioned drawing

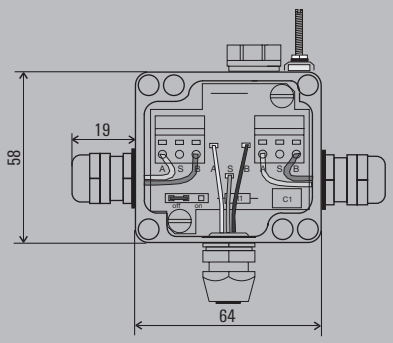

Wiring diagram

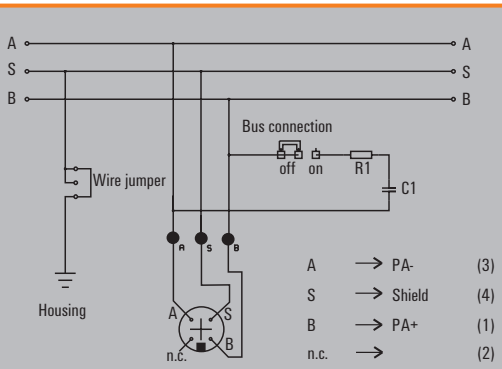

2-channel distributor

Cable gland

Ordering data

Type	Cable gland	QTY	Order No.
Aluminium housing			
FBCon PA CG 2way	branch line CG	1	**8564100000**
Stainless steel enclosure			

CG = brass cable gland
PCG = plastic cable gland

Dimensioned drawing

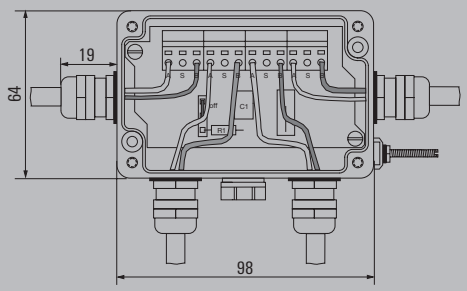

Wiring diagram

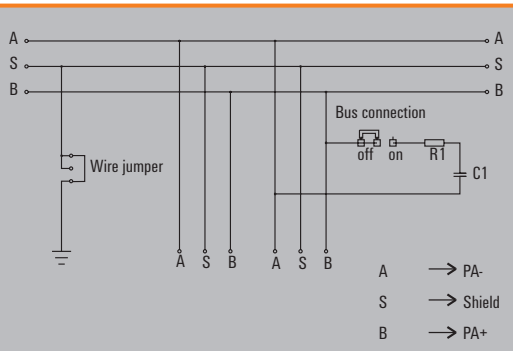

2-channel distributor

M12 connection

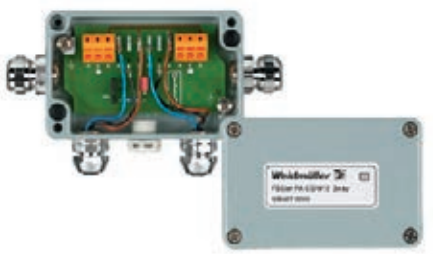

Ordering data

Type	Cable gland	QTY	Order No.
Aluminium housing			
FBCon PA CG/M12 2way	branch line M12	1	**8564070000**
Stainless steel enclosure			

CG = brass cable gland
PCG = plastic cable gland

Dimensioned drawing

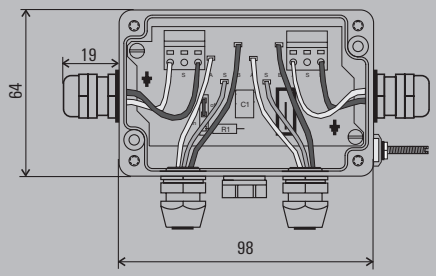

Wiring diagram

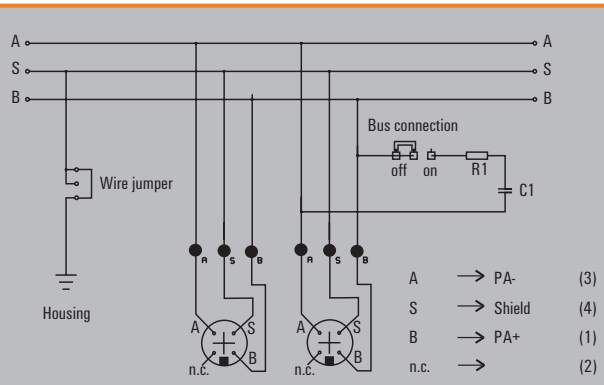

PROFIBUS-PA - FBCon T-distributor

4-channel distributor

Cable gland

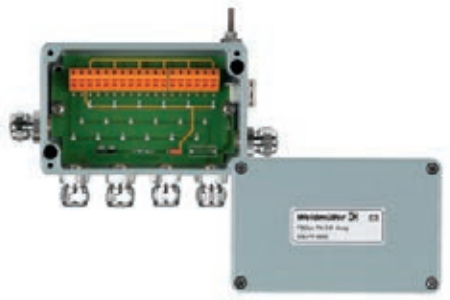

Ordering data

Type	Cable gland	QTY	Order No.
Aluminium housing			
FBCon PA CG 4way	branch line CG	1	**8564110000**
Stainless steel enclosure			
FBCon SS CG 4way	branch line CG	1	**8703450000**
FBCon SS PCG 4way	all connections PCG	1	**8613680000**

CG = brass cable gland
PCG = plastic cable gland

Dimensioned drawing

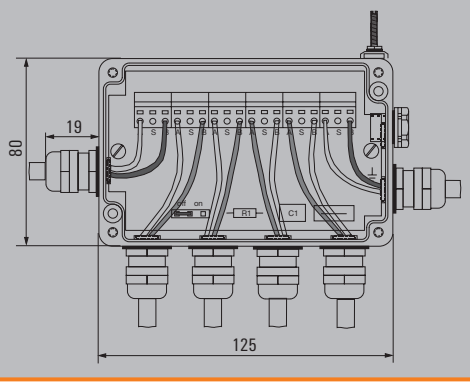

Wiring diagram

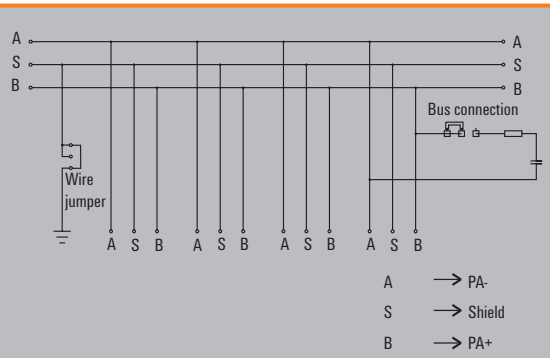

4-channel distributor

M12 connection

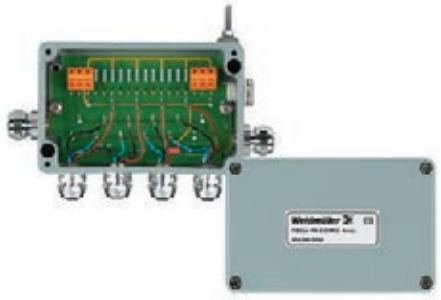

Ordering data

Type	Cable gland	QTY	Order No.
Aluminium housing			
FBCon PA CG/M12 4way	branch line M12	1	**8564080000**
Stainless steel enclosure			
FBCon SS CG/M12 4way	branch line M12	1	**8726040000**

CG = brass cable gland
PCG = plastic cable gland

Dimensioned drawing

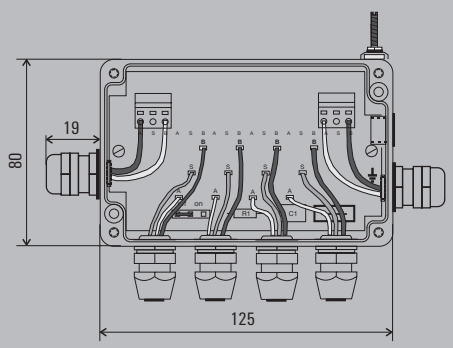

Wiring diagram

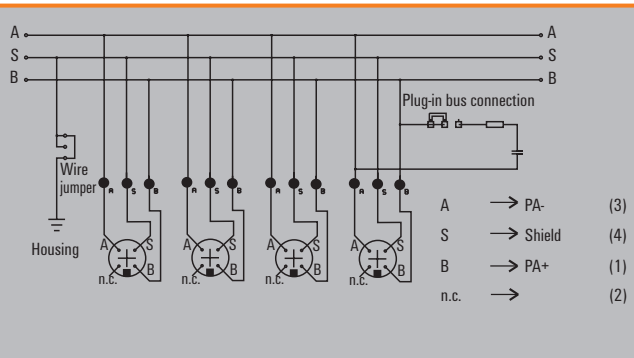

8-channel distributor

Cable gland

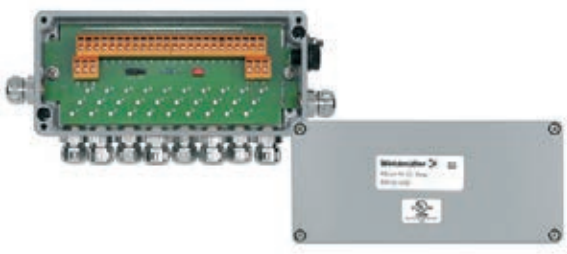

Ordering data

Type	Cable gland	QTY	Order No.
Aluminium housing			
FBCon PA CG 8way	branch line CG	1	**8564300000**
Stainless steel enclosure			
FBCon SS CG 8way	branch line CG	1	**8703470000**
FBCon SS PCG 8way	all connections PCG	1	**8640720000**

CG = brass cable gland
PCG = plastic cable gland

Dimensioned drawing

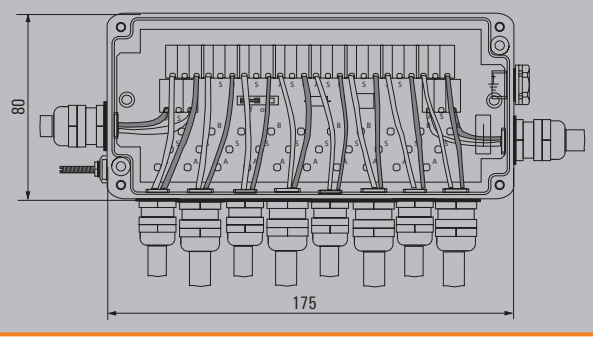

Wiring diagram

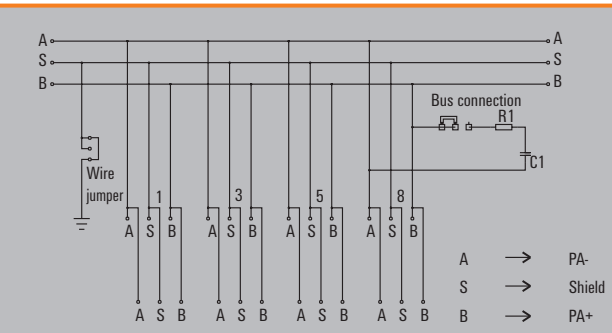

8-channel distributor

M12 connection

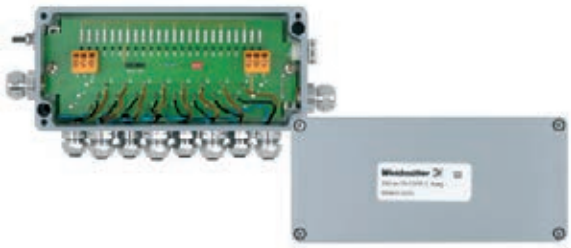

Ordering data

Type	Cable gland	QTY	Order No.
Aluminium housing			
FBCon PA CG/M12 8way	branch line M12	1	**8564310000**
Stainless steel enclosure			
FBCon SS CG/M12 8way	branch line M12	1	**8726050000**

CG = brass cable gland
PCG = plastic cable gland

Dimensioned drawing

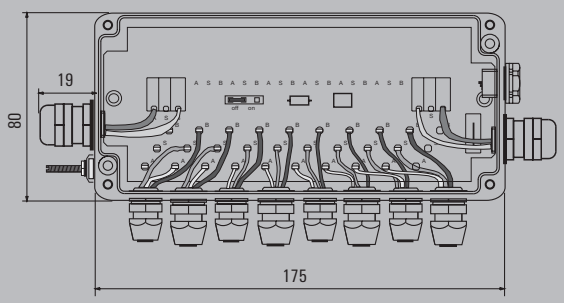

Wiring diagram

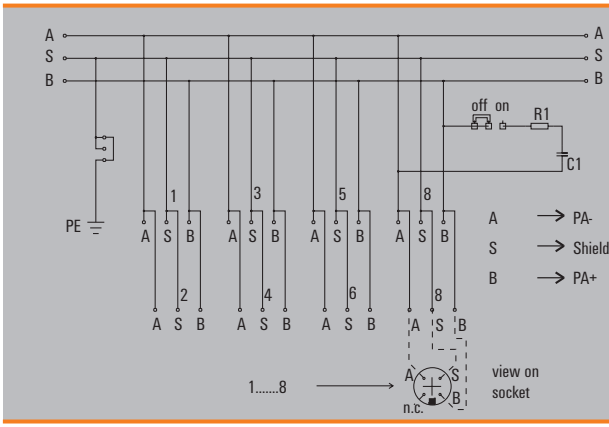

PROFIBUS-PA - FBCon T-distributor with surge protection

Fieldbus components for industrial applications with surge protection or current limiter

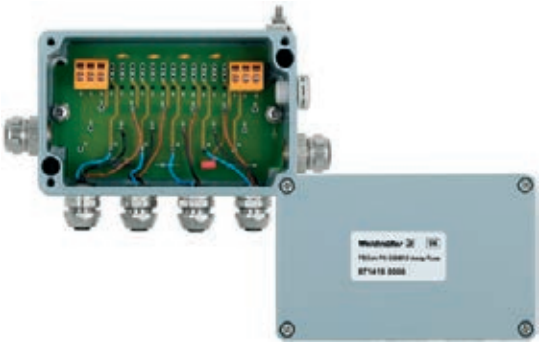

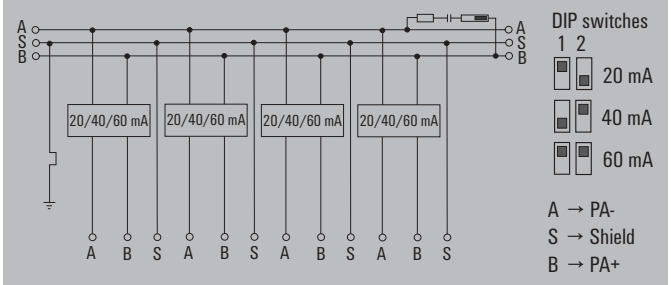

Example: 4-way module with current limiter

PROFIBUS-PA T-connectors

Fine surge protection or integrated current limiting mechanisms are designed for protecting connected measuring devices, sensors or actuators from surge voltages. Gas-discharge tubes and suppressor diodes are voltage-limiting protection mechanisms.
If a rapidly rising voltage pulse reaches the input of a T-connector with surge protection, the gas discharge tube ignites and discharges a high current.
The residual pulse is limited by a suppressor diode.

In the case of a slow rise in voltage, the pulse is processed by the diode alone.
The housing is connected to the protective earth via an external earth stud.
When using the connectors for current limiting, the PROFIBUS-PA network is protected against short circuits with protective circuitry.
The current can be set to either 20 mA, 40 mA or 60 mA by means of two DIP switches.

Surge protection
Technical data

Operating temperature	-40 °C to 85 °C
Ingress protection class	IP 67
Enclosure material	High grade aluminium alloy (AL - SI 12)
Finish	Painted RAL 7001
PROFIBUS-PA connection	Tension clamp terminals 0.5 - 1.5 mm²
Cable entry	Cable gland M16
Branch	M12 socket (4-pin)
Cable gland clamping range	5.5 - 9.5 mm
Nominal voltage DC/AC	UN = 24 V DC/18 V AC
Max. permissible operating voltage	UC = 30 V DC/21 V AC
Rated current at 30 °C	IN = 500 mA
Trip surge voltage (1 kV/µs)	< 600 V
Rated discharge surge current (8/20 µs)	ISN = 10 KA (wire-wire, wire-PE)
Output voltage limit (8/20 µs)	UP = 65 V
PROFIBUS-PA bus terminator	Via jumper

Installation advice

Torques	
Screw terminals	0.4 Nm
M16 cable gland at enclosure	6.0 Nm
Union nut M16 cable gland	4.0 Nm
Enclosure cover	1.8 - 2.0 Nm
External earthing cable	1.8 - 2.0 Nm

Limiter
Technical data

Operating temperature	-40 °C to 85 °C
Ingress protection class	IP 67
Enclosure material	High grade aluminium alloy (AL - SI 12)
Finish	Painted RAL 7001
PROFIBUS-PA connection	Tension clamp terminals 0.5 - 1.5 mm²
Cable entry	Cable gland M16
Branch	M12 socket (4-pin)
Cable gland clamping range	5.5 - 9.5 mm
Short-circuit protection per station	20, 40, 60 mA settings
PROFIBUS-PA bus terminator	Via jumper

Installation advice

Torques	
Screw terminals	0.4 Nm
M16 cable gland at enclosure	6.0 Nm
Union nut M16 cable gland	4.0 Nm
Enclosure cover	1.8 - 2.0 Nm
External earthing cable	1.8 - 2.0 Nm

1-channel distributor (OVP)

Cable gland

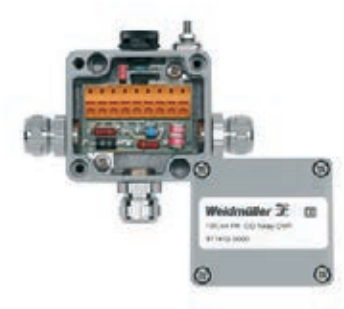

Ordering data

Type	Cable gland	QTY	Order No.
Aluminium housing			
FBCon PA CG 1way OVP	branch line CG	1	**8714120000**
Stainless steel enclosure			
FBCon SS PCG 1way OVP	all connections PCG	1	**8715270000**

CG = brass cable gland
PCG = plastic cable gland

Dimensioned drawing

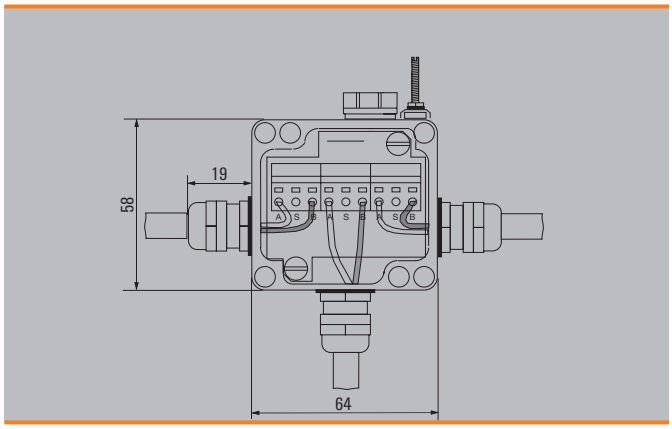

Wiring diagram

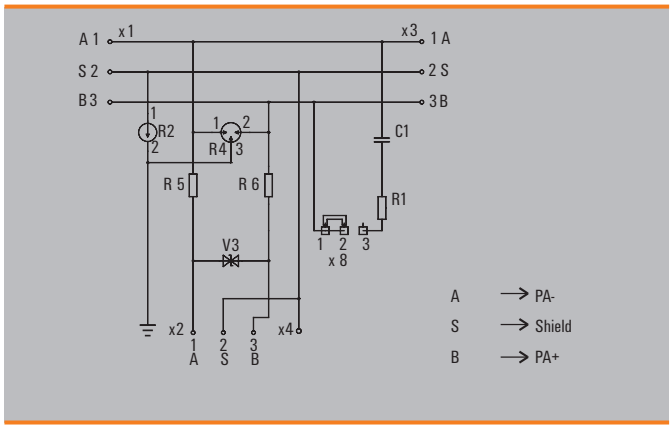

1-channel distributor (OVP)

M12 connection

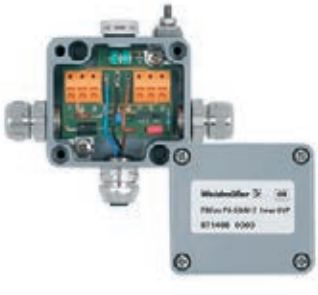

Ordering data

Type	Cable gland	QTY	Order No.
Aluminium housing			
FBCon PA CG/M12 1way OVP	branch line M12	1	**8714080000**
Stainless steel enclosure			

CG = brass cable gland
PCG = plastic cable gland

Dimensioned drawing

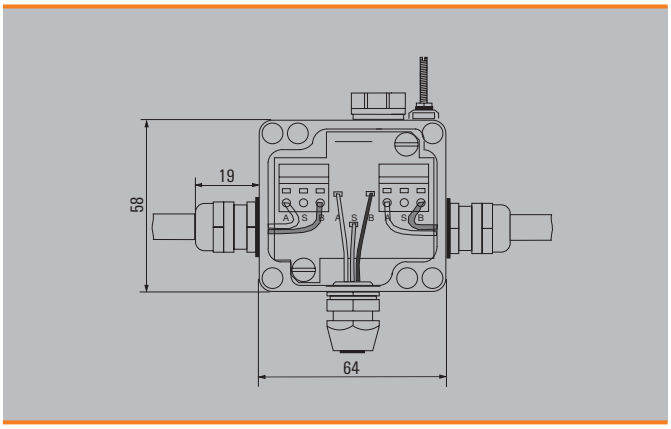

Wiring diagram

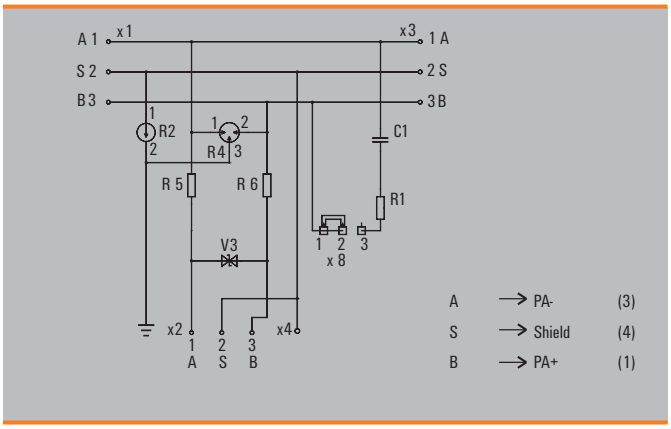

PROFIBUS-PA - FBCon T-distributor with surge protection

2-channel distributor (OVP)

Cable gland

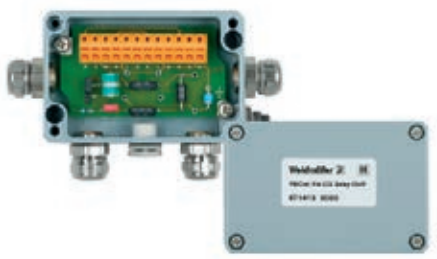

Ordering data

Type	Cable gland	QTY	Order No.
Aluminium housing			
FBCon PA CG 2way OVP	branch line CG	1	**8714130000**
Stainless steel enclosure			

CG = brass cable gland
PCG = plastic cable gland

Dimensioned drawing

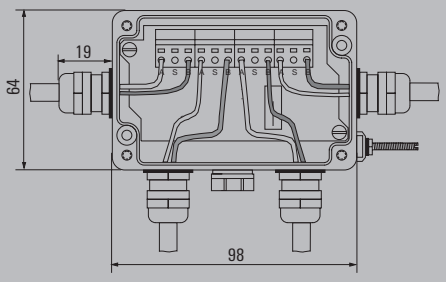

Wiring diagram

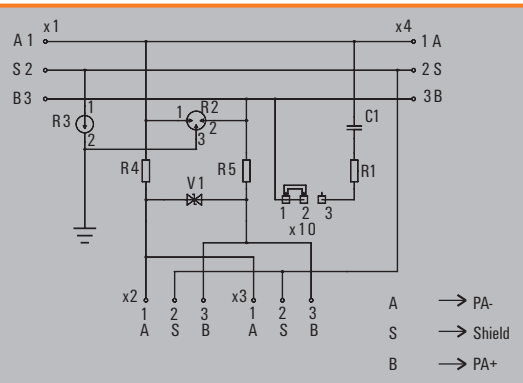

2-channel distributor (OVP)

M12 connection

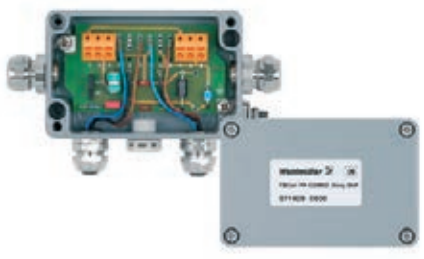

Ordering data

Type	Cable gland	QTY	Order No.
Aluminium housing			
FBCon PA CG/M12 2way OVP	branch line M12	1	**8714090000**
Stainless steel enclosure			

CG = brass cable gland
PCG = plastic cable gland

Dimensioned drawing

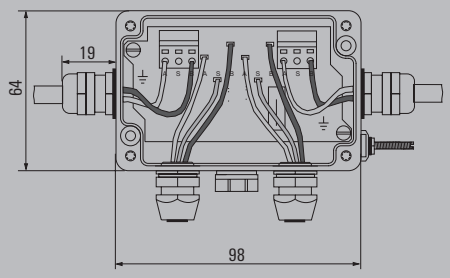

Wiring diagram

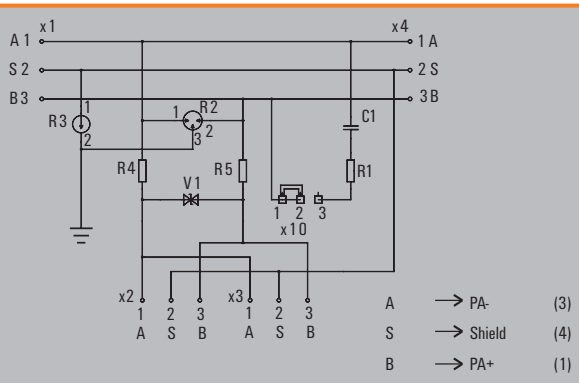

4-channel distributor (OVP)

Cable gland

Ordering data

Type	Cable gland	QTY	Order No.
Aluminium housing			
FBCon PA CG 4way OVP	branch line CG	1	**8714140000**
Stainless steel enclosure			
FBCon SS PCG 4way OVP	all connections PCG	1	**8726080000**

CG = brass cable gland
PCG = plastic cable gland

Dimensioned drawing

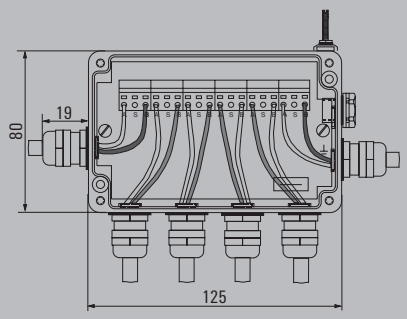

Wiring diagram

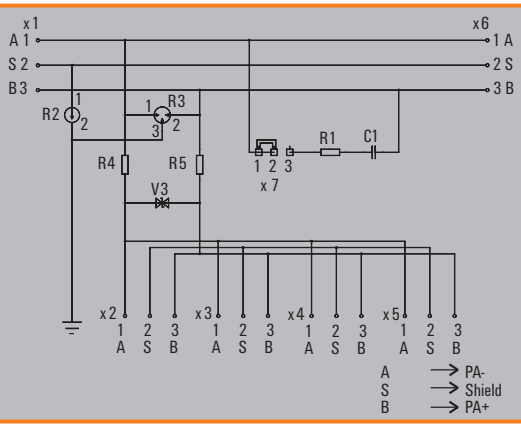

4-channel distributor (OVP)

M12 connection

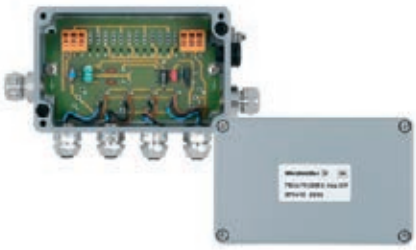

Ordering data

Type	Cable gland	QTY	Order No.
Aluminium housing			
FBCon PA CG/M12 4way OVP	branch line M12	1	**8714100000**
Stainless steel enclosure			

CG = brass cable gland
PCG = plastic cable gland

Dimensioned drawing

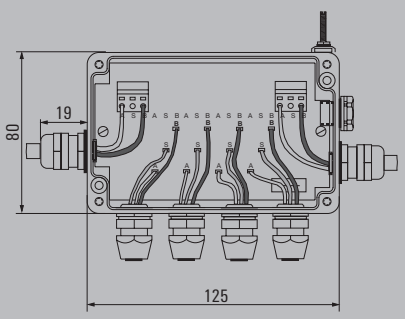

Wiring diagram

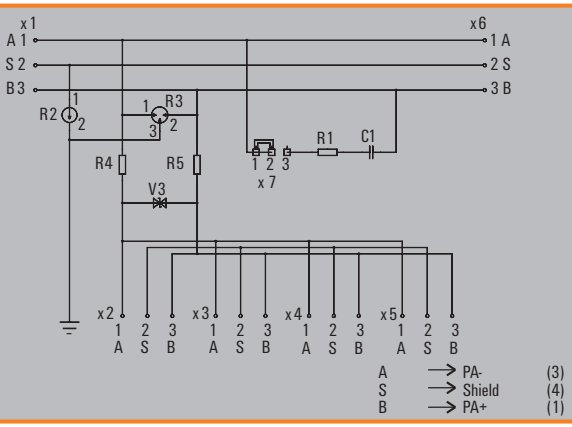

PROFIBUS-PA - FBCon T-distributor with surge protection

8-channel distributor (OVP)

Cable gland

Ordering data

Type	Cable gland	QTY	Order No.
Aluminium housing			
FBCon PA CG 8way OVP	branch line CG	1	**8714150000**
Stainless steel enclosure			
FBCon SS PCG 8way OVP	all connections PCG	1	**8726090000**

CG = brass cable gland
PCG = plastic cable gland

Dimensioned drawing

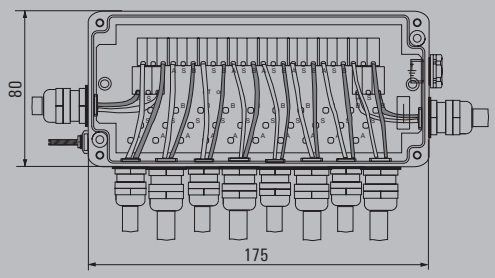

Wiring diagram

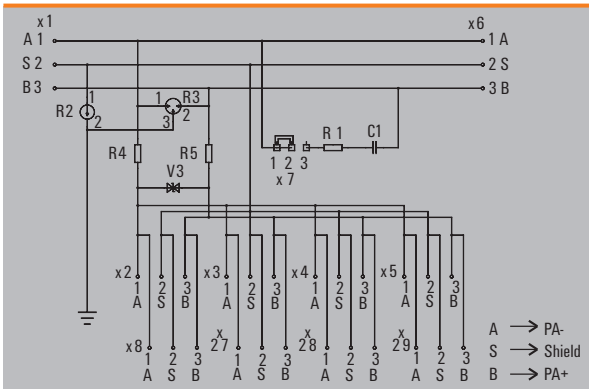

8-channel distributor (OVP)

M12 connection

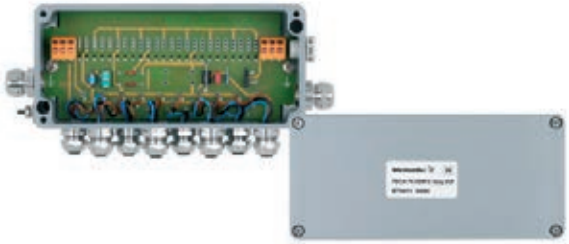

Ordering data

Type	Cable gland	QTY	Order No.
Aluminium housing			
FBCon PA CG/M12 8way OVP	branch line M12	1	**8714110000**
Stainless steel enclosure			

CG = brass cable gland
PCG = plastic cable gland

Dimensioned drawing

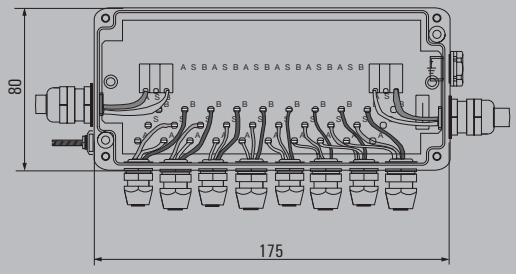

Wiring diagram

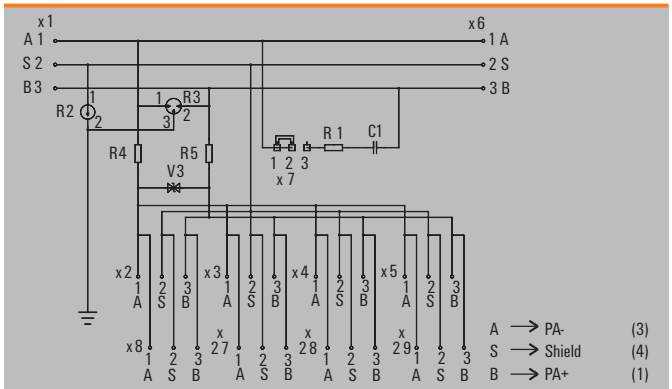

1-channel distributor (limiter)

Cable gland

Ordering data

Type	Cable gland	QTY	Order No.
Aluminium housing			
FBCon PA CG 1way Limiter	branch line CG	1	**8714200000**
Stainless steel enclosure			
FBCon SS PCG 1way Limiter	all connections PCG	1	**8726110000**

CG = brass cable gland
PCG = plastic cable gland

Dimensioned drawing

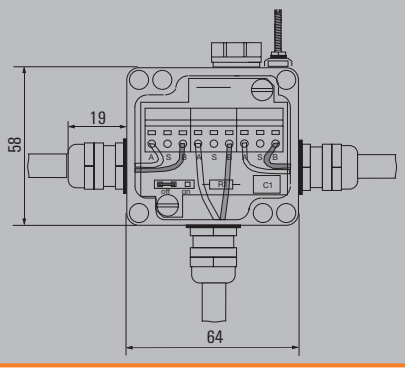

Wiring diagram

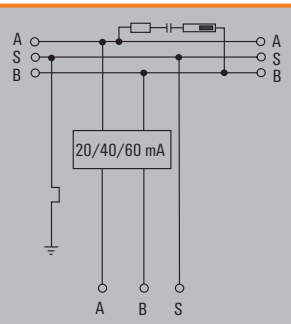

DIP switches

1 2

20 mA

40 mA

60 mA

A → PA-

S → Shield

B → PA+

1-channel distributor (limiter)

M12 connection

Ordering data

Type	Cable gland	QTY	Order No.
Aluminium housing			
FBCon PA CG/M12 1way Limiter	branch line M12	1	**8714160000**
Stainless steel enclosure			

CG = brass cable gland
PCG = plastic cable gland

Dimensioned drawing

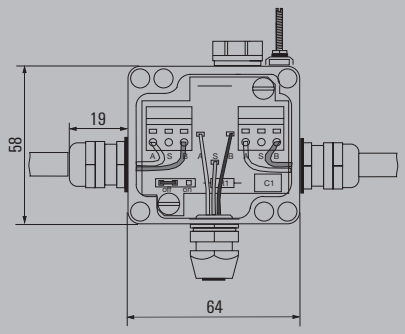

Wiring diagram

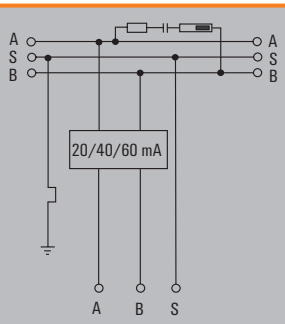

DIP switches

1 2

20 mA

40 mA

60 mA

A → PA- (3)

S → Shield (4)

B → PA+ (1)

PROFIBUS-PA - FBCon T-distributor with surge protection

2-channel distributor (limiter)

Cable gland

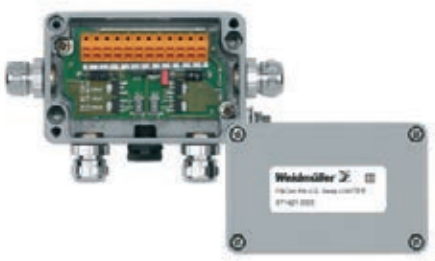

Ordering data

Type	Cable gland	QTY	Order No.
Aluminium housing			
FBCon PA CG 2way Limiter	branch line CG	1	**8714210000**
Stainless steel enclosure			

CG = brass cable gland
PCG = plastic cable gland

Dimensioned drawing

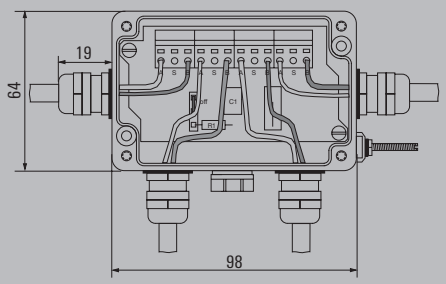

Wiring diagram

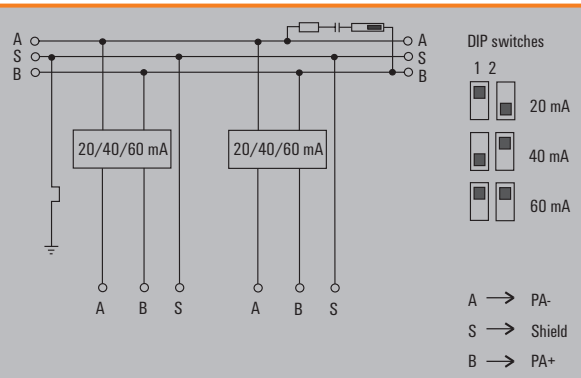

2-channel distributor (limiter)

M12 connection

Ordering data

Type	Cable gland	QTY	Order No.
Aluminium housing			
FBCon PA CG/M12 2way Limiter	branch line M12	1	**8714170000**
Stainless steel enclosure			

CG = brass cable gland
PCG = plastic cable gland

Dimensioned drawing

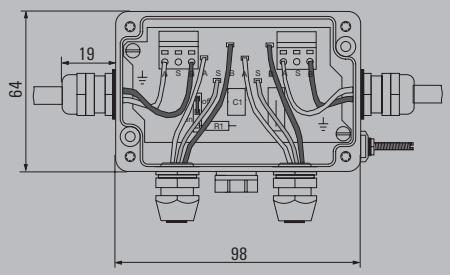

Wiring diagram

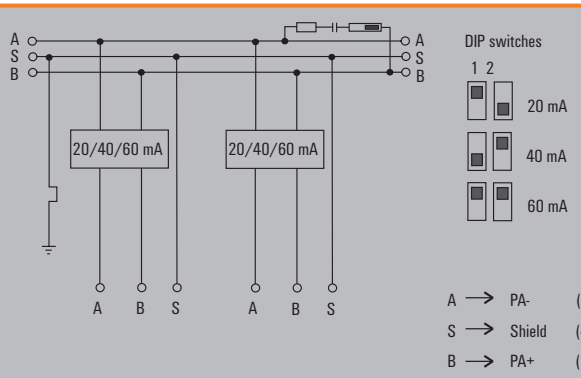

4-channel distributor (limiter)

Cable gland

Ordering data

Type	Cable gland	QTY	Order No.
Aluminium housing			
FBCon PA CG 4way Limiter	branch line CG	1	**8714220000**
Stainless steel enclosure			
FBCon SS PCG 4way Limiter	all connections PCG	1	**8715260000**

CG = brass cable gland
PCG = plastic cable gland

Dimensioned drawing

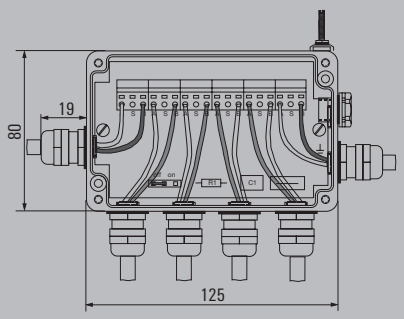

Wiring diagram

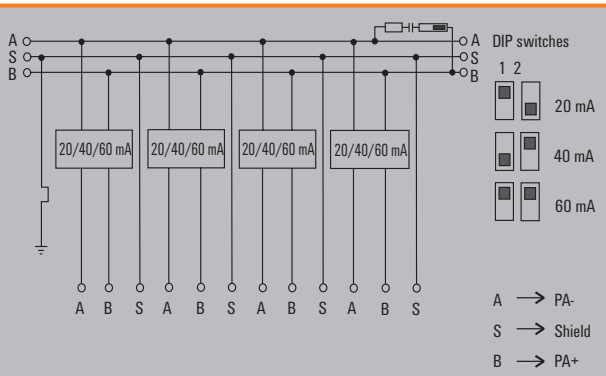

4-channel distributor (limiter)

M12 connection

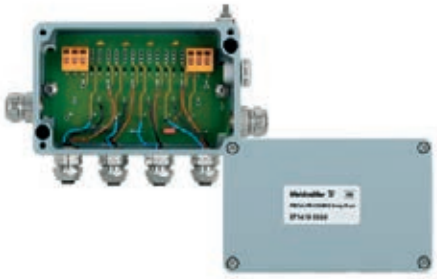

Ordering data

Type	Cable gland	QTY	Order No.
Aluminium housing			
FBCon PA CG/M12 4way Limiter	branch line M12	1	**8714180000**
Stainless steel enclosure			

CG = brass cable gland
PCG = plastic cable gland

Dimensioned drawing

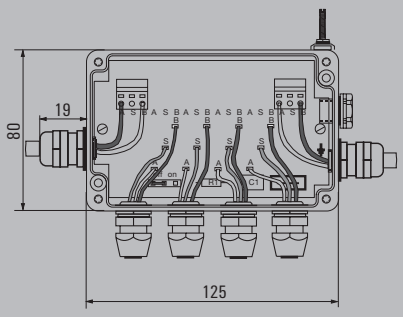

Wiring diagram

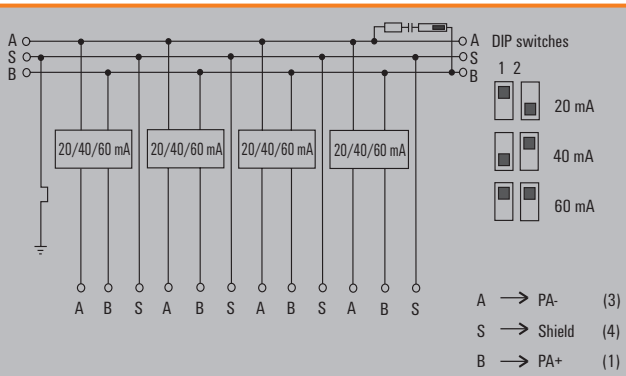

PROFIBUS-PA - FBCon T-distributor with surge protection

8-channel distributor (limiter)

Cable gland

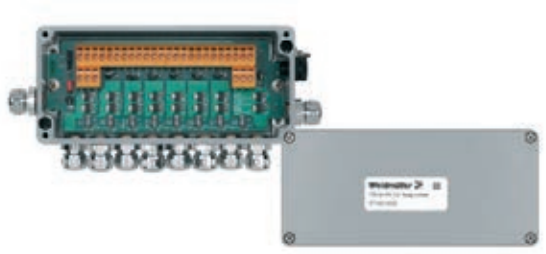

Ordering data

Type	Cable gland	QTY	Order No.
Aluminium housing			
FBCon PA CG 8way Limiter	branch line CG	1	**8714230000**
Stainless steel enclosure			
FBCon SS PCG 8way Limiter	all connections PCG	1	**8726160000**

CG = brass cable gland
PCG = plastic cable gland

Dimensioned drawing

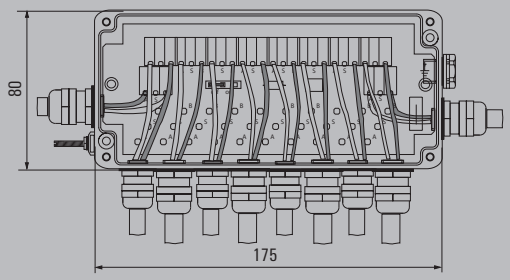

Wiring diagram

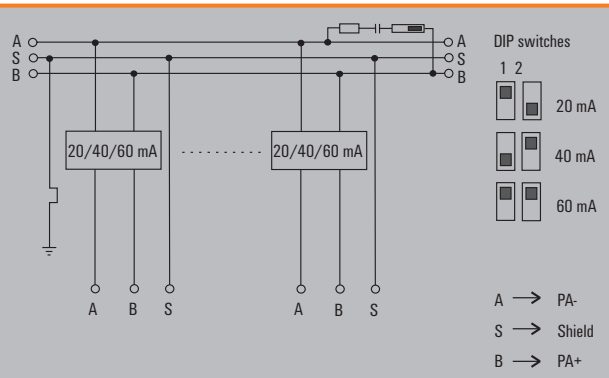

8-channel distributor (limiter)

M12 connection

Ordering data

Type	Cable gland	QTY	Order No.
Aluminium housing			
FBCon PA CG/M12 8way Limiter	branch line M12	1	**8714190000**
Stainless steel enclosure			

CG = brass cable gland
PCG = plastic cable gland

Dimensioned drawing

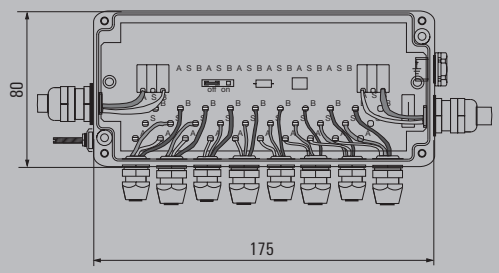

Wiring diagram

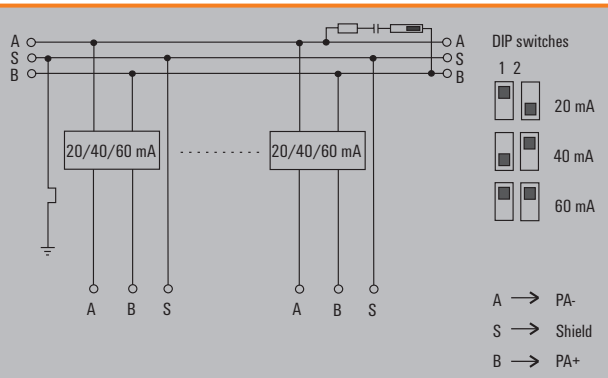

FBCon distributors for Ex areas

PROFIBUS-PA T-connector
- **Ex(ia)**

The PROFIBUS-PA installation products are increasingly used in the
- food industry
- basic industries and
- chemical industry.

The product range offers a wide choice of customer solutions for use in harsh conditions. This includes standard and EX versions of single and multi-way design with M12 plug in connection or cable glands. Weidmüller offers a solution for almost every application. If you cannot find your solution here, please contact the branch / sales office responsible for you.

PROFIBUS-PA T-connector
- Ex(ia)
- 1-way
- 2-way
- 4-way
- 8-way

The PROFIBUS-PA T connector Ex(ia) specification is intended for direct coupling of measuring devices, sensors, actuators, etc. in potentially explosive areas.
- Approval for intrinsically safe use ATEX approval
- IP 66 Ingress Protection Class
- Modular design
- Uninterruptible bus operation
- Simple handling
- External earth terminal
- External bus terminator

Approvals

Weidmüller

Bus Terminator 8556460000

Datum:27.11.00, Seite 1/2

Technische Beschreibung /Einsatzgebiete:

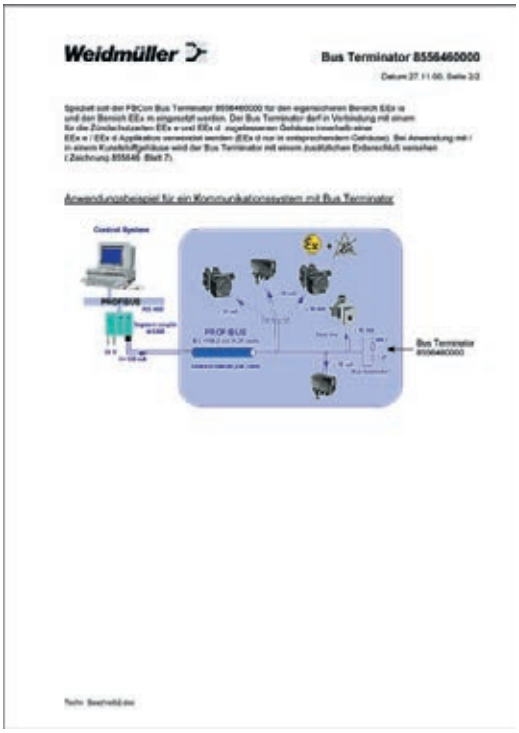

Weidmüller

Bus Terminator 8556460000

Datum:27.11.00, Seite 2/2

Anwendungsbeispiel für ein Kommunikationssystem mit Bus Terminator

KEMA

EC-TYPE EXAMINATION CERTIFICATE

KEMA

AMENDMENT 1

Manufacturer: Weidmüller Interface GmbH & Co.

Description

Test documentation

Page 1/1

PROFIBUS-PA - FBCon T-distributor ATEX Ex(ia)

1-channel distributor Ex

Cable gland

Ordering data

Type	Cable gland	QTY	Order No.
Aluminium housing			
FBCon PA CG 1way Ex	branch line CG	1	**8564180000**
Stainless steel enclosure			

CG = brass cable gland
PCG = plastic cable gland

Dimensioned drawing

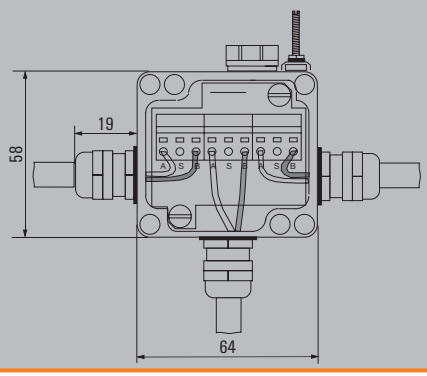

Wiring diagram

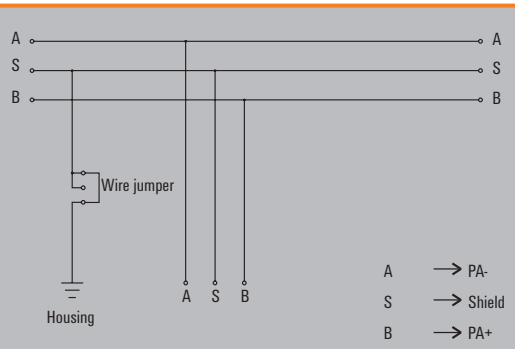

1-channel distributor Ex

M12 connection

Ordering data

Type	Cable gland	QTY	Order No.
Aluminium housing			
FBCon PA CG/M12 1way Ex	branch line M12	1	**8564150000**
Stainless steel enclosure			

CG = brass cable gland
PCG = plastic cable gland

Dimensioned drawing

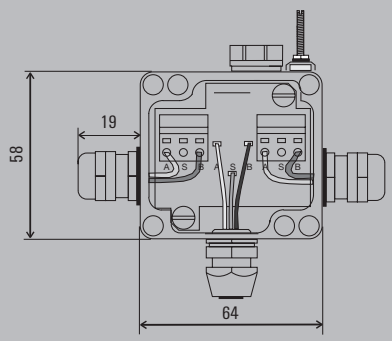

Wiring diagram

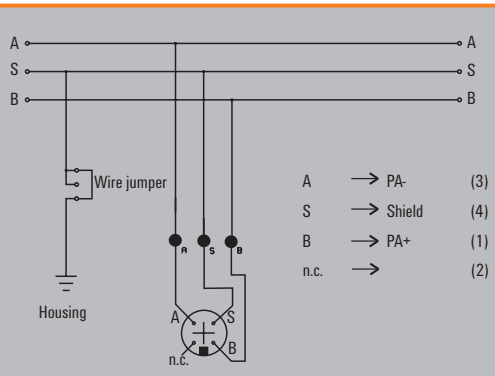

2-channel distributor Ex

Cable gland

Ordering data

Type	Cable gland	QTY	Order No.
Aluminium housing			
FBCon PA CG 2way Ex	branch line CG	1	**8564190000**
Stainless steel enclosure			

CG = brass cable gland
PCG = plastic cable gland

Dimensioned drawing

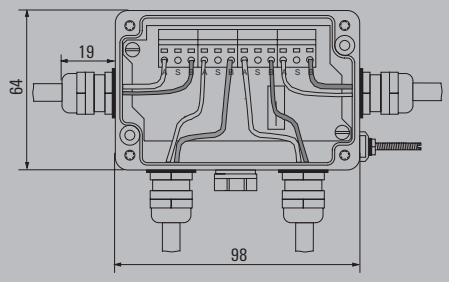

Wiring diagram

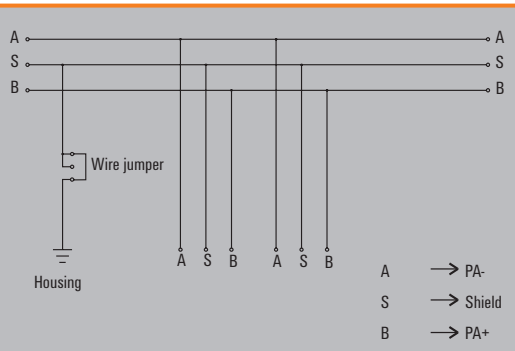

2-channel distributor Ex

M12 connection

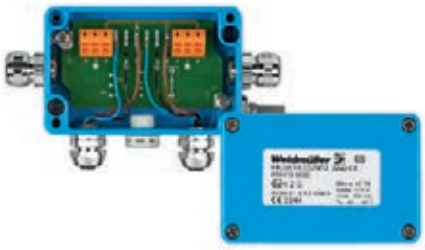

Ordering data

Type	Cable gland	QTY	Order No.
Aluminium housing			
FBCon PA CG/M12 2way Ex	branch line M12	1	**8564160000**
Stainless steel enclosure			

CG = brass cable gland
PCG = plastic cable gland

Dimensioned drawing

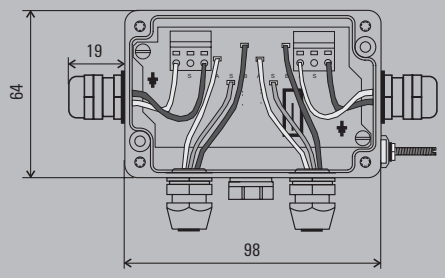

Wiring diagram

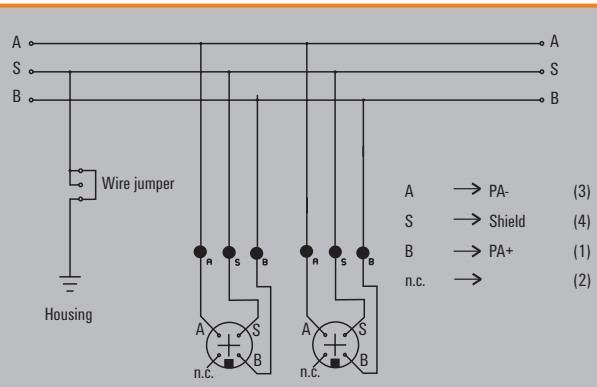

PROFIBUS-PA - FBCon T-distributor ATEX Ex(ia)

4-channel distributor Ex

Cable gland

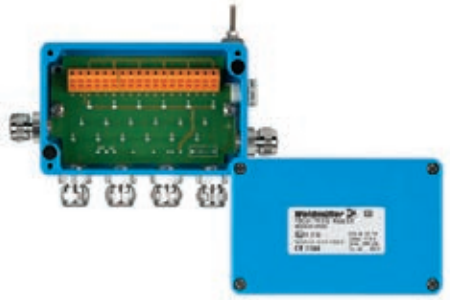

Ordering data

Type	Cable gland	QTY	Order No.
Aluminium housing			
FBCon PA CG 4way Ex	branch line CG	1	**8564200000**
Stainless steel enclosure			

CG = brass cable gland
PCG = plastic cable gland

Dimensioned drawing

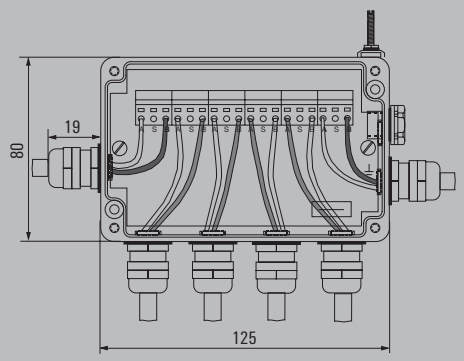

Wiring diagram

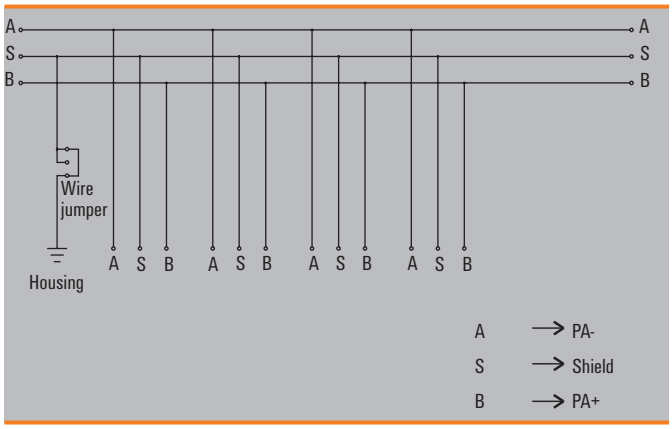

4-channel distributor Ex

M12 connection

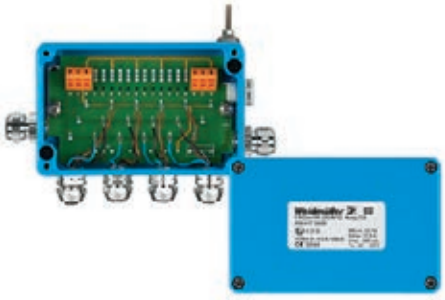

Ordering data

Type	Cable gland	QTY	Order No.
Aluminium housing			
FBCon PA CG/M12 4way Ex	branch line M12	1	**8564170000**
Stainless steel enclosure			

CG = brass cable gland
PCG = plastic cable gland

Dimensioned drawing

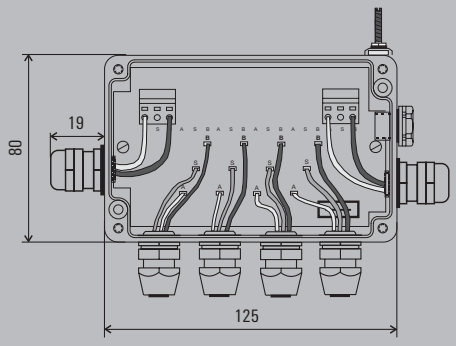

Wiring diagram

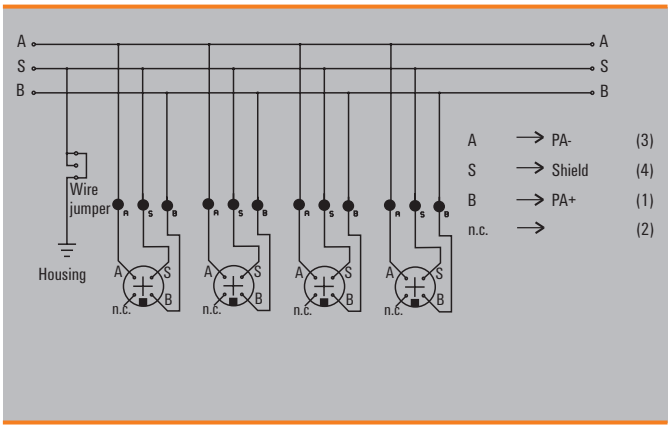

8-channel distributor Ex

Cable gland

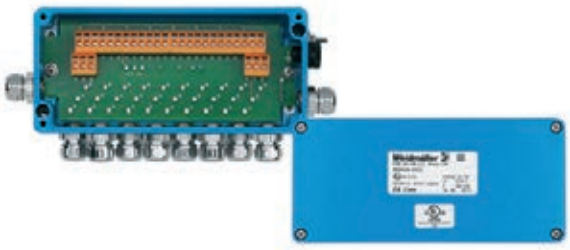

Ordering data

Type	Cable gland	QTY	Order No.
Aluminium housing			
FBCon PA CG 8way Ex	branch line CG	1	**8564240000**
Stainless steel enclosure			

CG = brass cable gland
PCG = plastic cable gland

Dimensioned drawing

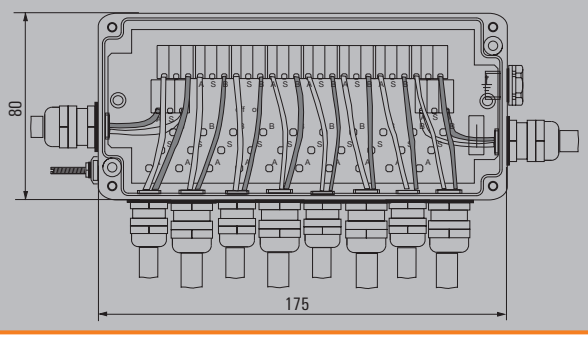

Wiring diagram

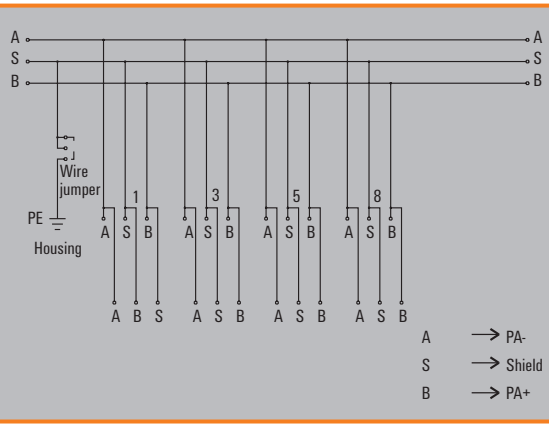

8-channel distributor Ex

M12 connection

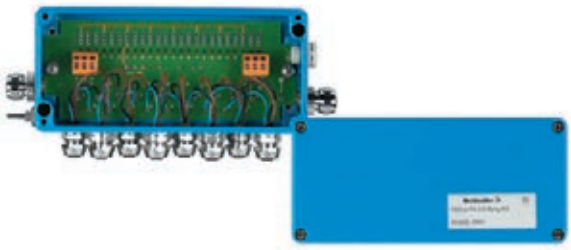

Ordering data

Type	Cable gland	QTY	Order No.
Aluminium housing			
FBCon PA CG/M12 8way Ex	branch line M12	1	**8564250000**
Stainless steel enclosure			

CG = brass cable gland
PCG = plastic cable gland

Dimensioned drawing

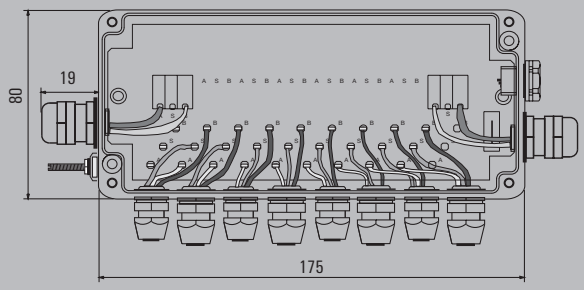

Wiring diagram

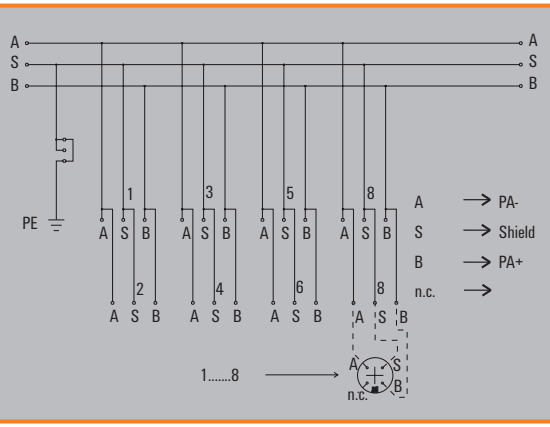

FBCon bus terminator
FBCon bus terminator without earth connection

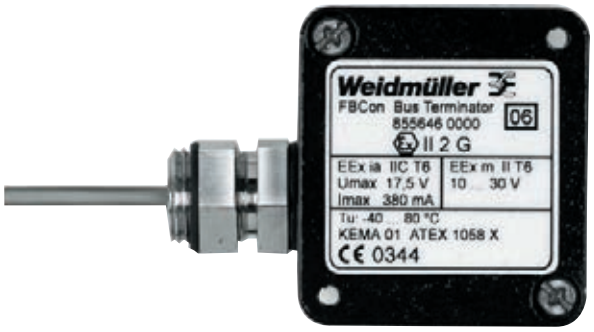

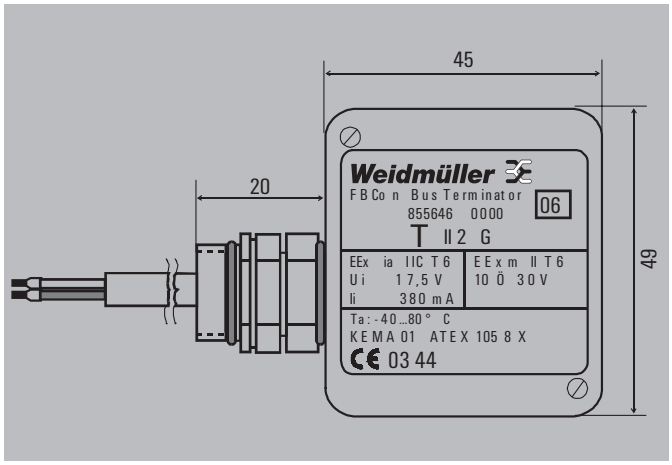

Technical data

Operating temperature	-40 °C to 80 °C
Ingress protection class	IP 66
Enclosure material	High grade aluminium alloy (Al – Si 12)
Finish	Black powder-coated
Connection lead	2 x 0.14 mm²
Cable entry	Bus adapter M16

Ordering data

Type	Qty.	Order No.
FBCon Bus Terminator EEx with locking clip, without earth connection	1	8556460000
FBCon Bus Terminator EEx without locking clip, without earth connection	1	8606190000

Wiring diagram

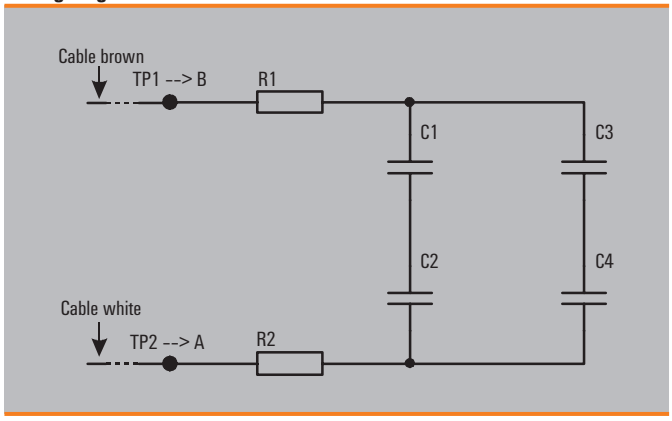

FBCon Bus Terminator with earth connection

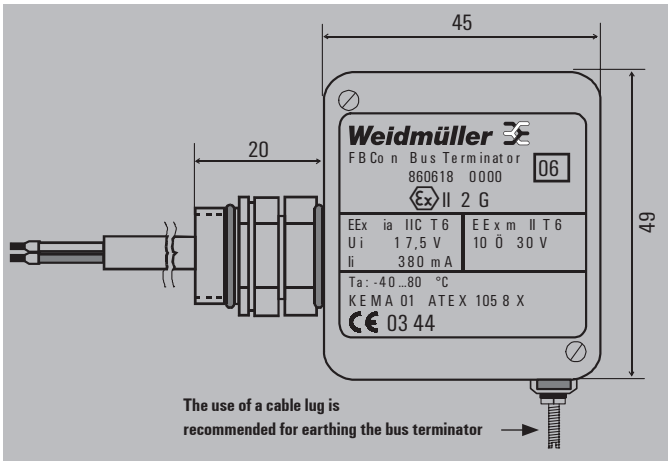

Technical data

Operating temperature	-40 °C to 80 °C
Ingress protection class	IP 66
Enclosure material	High grade aluminium alloy (Al – Si 12)
Finish	Black powder-coated
Connection lead	2 x 0.14 mm²
Cable entry	Bus adapter M16

Ordering data

Type	Qty.	Order No.
FBCon Bus Terminator EEx with locking clip, withearth connection	1	8606180000
FBCon Bus Terminator EEx without locking clip, with earth connection	1	8606200000

Housing cover without clip-on foot

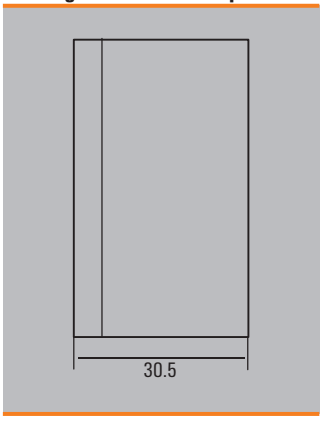

Housing cover with clip-on foot

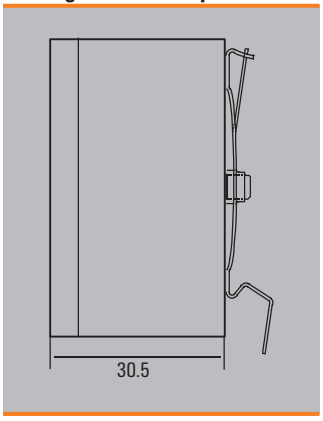

Actuator-Sensor Interface Line

The new space-saving SAI AS-Interface family makes new applications possible. The narrow 24 mm form of the modules means that they can fit into a very small installation space. The length is also remarkable, since the M8 module with 4 connections is only 123 mm long.

The ribbon cable locks into the base part, while the coded cable rules out the possibility of misconnection. The piercing connectors make the module easy to connect with the help of a screwdriver. Pure input modules only require the yellow ribbon cable. The additional voltage for the outputs is fed to the module via the black cable.

The implementation of the new AS-Interface specification 3.0 means that modules with 8 inputs on one address with 62 slaves are possible in one network. Also modules with 4 inputs and 4 outputs with 62 slaves are now available. These modules require an M4 master.

All modules are certified by the AS-Interface Association and conform to the AS-Interface specifications.

The outputs, as well as the supply for sensors, are protected against short circuits and overload. These faults are signalled to the master using the peripheral bit. At the same time, the AS-I and fault LEDs blink alternately red/green in accordance with the AS-Interface specification.

All outputs can be simultaneously operated at the maximum current capacity of 0.5 A.

The housing has IP 67 class of protection, which guarantees resistance to water and dust. The addressing is performed via the infrared adapter with the user-friendly hand programming tool.

With the Weidmüller MultiCard markers, each I/O point can be individually marked, while a further marker is available for the complete module.

There are eight module versions, with four different I/O configurations available:

- 4 inputs
- 8 inputs
- 4 outputs
- 4 inputs and 4 outputs

Each I/O variant is available in two connection versions. The sensors or actuators can be connected with 5-pole M12 or 3-pole M8 plug-in connectors.

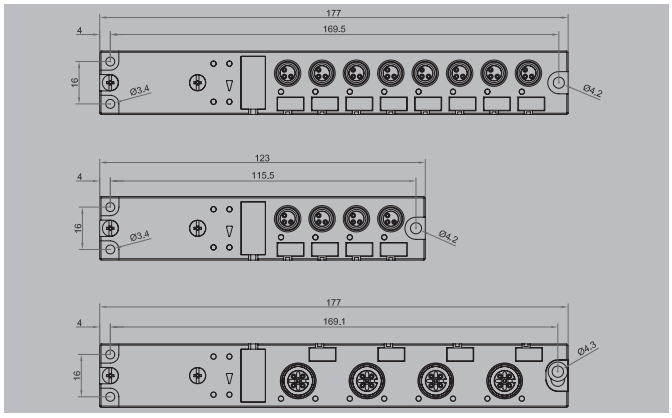

SAI-ASI Line V3

SAI-ASI Line

M8

SAI-ASI Line

M12

Ordering data

IO variants	Type	Qty.	Order No.	Type	Qty.	Order No.
4 inputs	SAI-ASI-L-M8-4I V3	1	1962640000	SAI-ASI-L-M12-4I V3	1	1962680000
4 outputs	SAI-ASI-L-M8-4O V3	1	1962660000	SAI-ASI-L-M12-4O V3	1	1962700000
4 inputs / 4 outputs	SAI-ASI-L-M8-4I/4O V3	1	1962670000	SAI-ASI-L-M12-4I/4O V3	1	1962710000
8 inputs	SAI-ASI-L-M8-8I V3	1	1962650000	SAI-ASI-L-M12-8I V3	1	1962690000
Note						

Technical specifications of bus system

Bus user	Slave
No. of subscribers	62
Transmission rate	167 kbits
Diagnosis indication	red
Station addresses	Infrared
AS interface spezifikation	V3.0
Note	

Technical data

General data	
Insulation material of housing	PBT
Flammability class UL 94	V-0
Operating temperature	-25 °C ... 60 °C
Storage temperature	-25 °C ... 85 °C
Protection class	IP 67
Electrical data	
Rated voltage	26.5 ...31.6 V
max. current-carrying capacity per output signal	0.5 A
Output level	Short-circuit-protected
Total current max.	2 A
Digital input type	TYPE 1 to EN 61131-2
E/A function indicator	LED yellow
Sensor voltage indicator	LED green

Accessories

Miscellaneous accessories	Type	Qty.	Order No.
M12 protective cap	SAI-SK-M12	30	9456050000
M8 protective cap	SAI-SK M8	50	1802760000
Note			

AS-Interface ribbon cables

AS-Interface ribbon cable, rubber

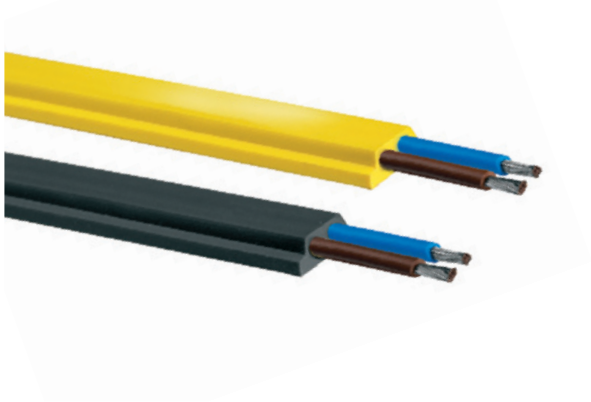

Technical data

Use	AS-Interface
Colour	yellow, black
Type of cable	profiled cable
Conductor cross-section	2 x 1.5 mm²
Material	EPDM (rubber)
Halogen-free	yes
Temperature range (at rest)	–40 °C ... +85 °C
Temperature range (moving)	–25 °C ... +85 °C
Flammability class	flammable
Ozone/weather-resistant	partially resistant
Minimum bending radii	fixed: 12 mm movable: 24 mm
Flexural properties	no break after 30,000 backward and forward movements

Ordering data

Type	Designation	Qty.	Order No.
AS-KG-ge	Ribbon cable yellow	100 m	**9455110000**
AS-KG-sw	Ribbon cable black	100 m	**9455120000**

Coupling module single from ribbon cable to round cable

Technical data

Connection AS-Interface	ribbon cable
No. connectable cables	1
Type of cable	ribbon cable, yellow + black
Flexible lead cross-section	1.5 mm²
Connection type	piercing technology
Outlet line	
Type of cable	PUR
Conductor cross-section	0.34 mm²
Cable length	2 m
Operating voltage	≤ 40 V
Operating current	≤ 4 A
General data	
Pollution severity DIN EN 0110	3
Ambient temperature	–25 °C ... +75 °C
Storage temperature	–40 °C ... +85 °C
Housing material	PA 6-GF-FR
Shock resistance	30 g/11 ms
Vibration resistance	10 ... 55 Hz; 1.0 mm amplitude
Specific data	
Ingress protection class DIN 40050	IP 67
Weight	20 g
M12 Pin assignment	
Pin 1: blue	AS-Interface „+" blue
Pin 3: brown	AS-Interface „–" brown

Ordering data

Type	Qty.	Order No.
SAI-ASI T FR	1	**1925010000**

Bridge module ribbon cable

Technical data

Connection AS-Interface	ribbon cable
No. connectable cables	2
Type of cable	ribbon cable, yellow + black
Flexible lead cross-section	1.5 mm²
Connection type	piercing technology
Outlet line	
Type of cable	PUR solid
Operating voltage	≤ 40 V
Operating current	≤ 4 A
General data	
Pollution severity DIN EN 0110	3
Ambient temperature	-25 °C ... +75 °C
Storage temperature	-40 °C ... +85 °C
Housing material	PA 6-GF-FR
Shock resistance	30 g/11 ms
Vibration resistance	10 ... 55 Hz; 1.0 mm amplitude
Specific data	
Ingress protection class DIN 40050	IP 65
Weight	20 g without cable

Ordering data

Type	Qty.	Order No.
SAI-ASI T FF small	1	**1026090000**

Coupling module ribbon cable to round cable / yellow + black (2 m)

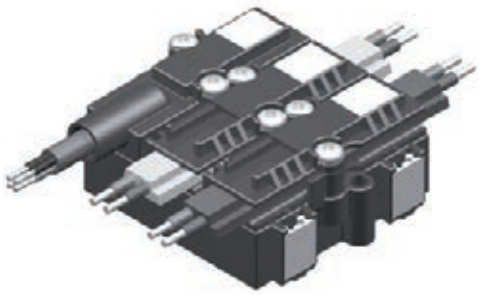

Technical data

Connection AS-Interface	ribbon cable
No. connectable cables	2
Type of cable	ribbon cable, yellow + black
Flexible lead cross-section	1.5 mm²
Connection type	piercing technology
Outlet line	
Type of cable	PUR
Conductor cross-section	0.34 mm²
Cable length	2 m
Operating voltage	≤ 40 V
Operating current	≤ 4 A
General data	
Pollution severity DIN EN 0110	3
Ambient temperature	-25 °C ... +75 °C
Storage temperature	-40 °C ... +85 °C
Housing material	PA 6-GF-FR
Shock resistance	30 g/11 ms
Vibration resistance	10 ... 55 Hz; 1.0 mm amplitude
Specific data	
Ingress protection class DIN 40050	IP 65 / IP 67
Weight	50 g without cable
M12 Pin assignment	
Pin 1: brown	AS-Interface „+"
Pin 2: white	ext. power supply „-"
Pin 3: blue	AS-Interface „-"
Pin 4: black	ext. power supply „+"

Ordering data

Type	Qty.	Order No.
SAI-ASI T FFR	1	**1924980000**

CAN/DeviceNet™ cables one end without connector

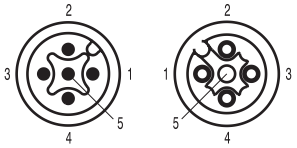

Male Female

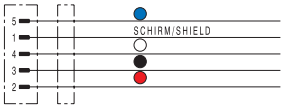

Ordering data

		Type	5-pole Order No.
Male, straight			
PUR/TPE	1.5 m	SAIL-M12G-CD-1.5A	**1964700150**
PVC/PVC	1.5 m	SAIL-M12G-CD-1.5B	**1060110150**
Male, angled			
PUR/TPE	1.5 m	SAIL-M12W-CD-1.5A	**1062220150**
PVC/PVC	1.5 m	SAIL-M12W-CD-1.5B	**1062170150**
Female, straight			
PUR/TPE	1.5 m	SAIL-M12BG-CD-1.5A	**1964690150**
PVC/PVC	1.5 m	SAIL-M12BG-CD-1.5B	**1060120150**
Female, angled			
PUR/TPE	1.5 m	SAIL-M12BW-CD-1.5A	**1061980150**
PVC/PVC	1.5 m	SAIL-M12BW-CD-1.5B	**1062180150**
Note		Other versions on request	

Standard cable lengths

All cables listed under the ordering data have a length of 1.5 metres. The last four ordering digits must be changed when ordering other standard cable lengths.

1.5 m	xxxxxx0150
3.0 m	xxxxxx0300
5.0 m	xxxxxx0500
10.0 m	xxxxxx1000

Technical data

Sheathing colour	Black
Protection degree	IP 67
Wire cross section	2 x 0.34 + 2 x 0.22 mm²
Contact surface	Gold-plated
Temperature range of housing	-25...+85 °C

Chapter W includes additional technical specifications for the cable

Dimensioned drawing

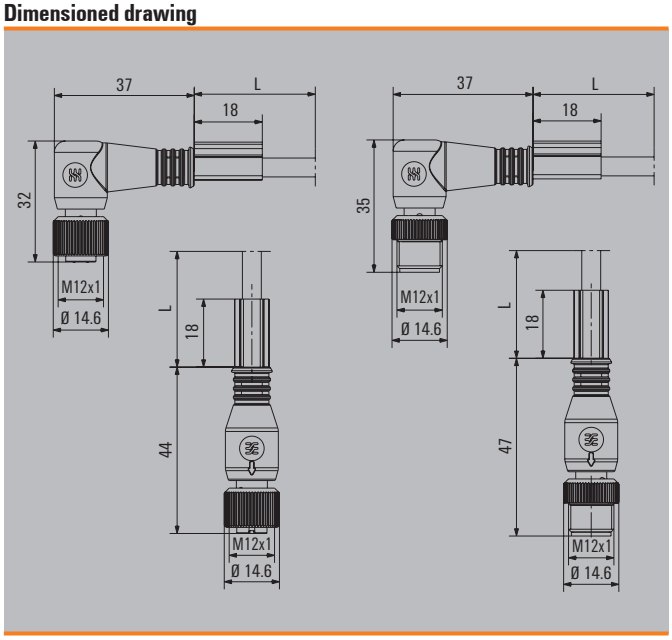

CAN/DeviceNet™ cables
connecting cables

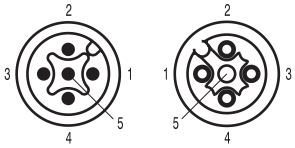

Male Female

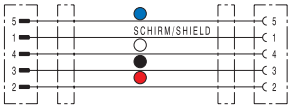

Ordering data

Type	Order No.	5-pole
Male, straight - Female, straight		
PUR/TPE 1.5 m		
PVC/PVC 1.5 m		
Male, straight - Female, angled		
PUR/TPE 1.5 m		
PVC/PVC 1.5 m		
Male, angled - Female, angled		
PUR/TPE 1.5 m		
PVC/PVC 1.5 m		
Note		

Type	Order No.	5-pole
SAIL-M12GM12G-CD-1.5A	1964710150	
SAIL-M12GM12G-CD-1.5B	1060130150	
SAIL-M12GM12W-CD-1.5A	1061990150	
SAIL-M12GM12W-CD-1.5B	1062190150	
SAIL-M12WM12W-CD-1.5A	1062150150	
SAIL-M12WM12W-CD-1.5B	1062210150	
Other versions on request		

Standard cable lengths

All cables listed under the ordering data have a length of 1.5 metres. The last four ordering digits must be changed when ordering other standard cable lengths.

1.5 m	xxxxxx0150
3.0 m	xxxxxx0300
5.0 m	xxxxxx0500
10.0 m	xxxxxx1000

Technical data

Sheathing colour	Black
Protection degree	IP 67
Wire cross section	2 x 0.34 + 2 x 0.22 mm²
Contact surface	Gold-plated
Temperature range of housing	-25...+85 °C

Chapter W includes additional technical specifications for the cable

Dimensioned drawing

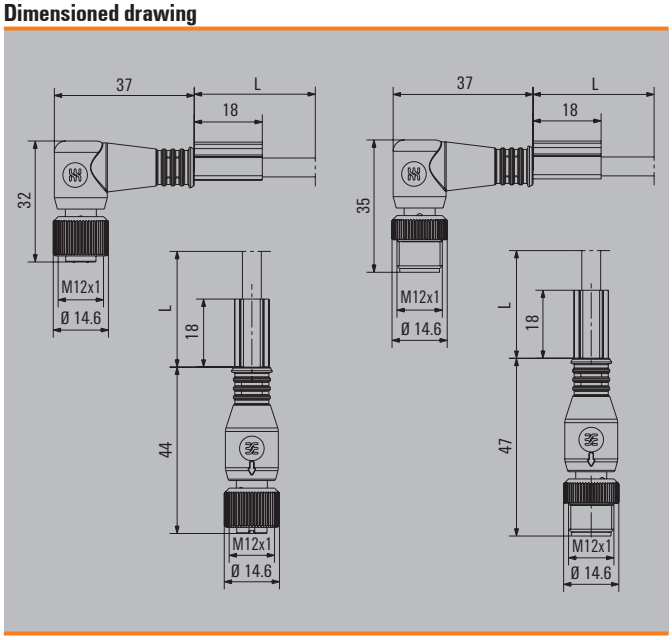

CAN/DeviceNet™ cables
Connecting cables

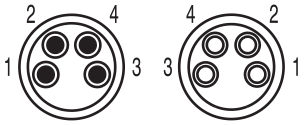

Male Female

Technical data

Operating voltage	Max. 300 V peak
Wire	Conductor: copper wire, without insulation, AWG 24, 7-wire Insulation: PE 2Y
Quad	4 wires according to 3.1 are stranded in group of four
Stranding sequence	Brown, green, white, yellow
Wrapping	Plastic foil
Shield	Braiding tin-plated copper, opt. Coverage ≥ 85 %
Outer cladding	PVC, YM
Electrical properties	
Conductor resistance (at 20 °C)	≤ 87 Ω/km
Insulation resistance	≤ 1 GΩ x km
Dielectric strength (50 Hz 1 min.)	Wire/wire 1000 V
Characteristic impedance 1-1000 KHz	nom. 100-120 Ω
Operational capacity	nom. 56 pF/m
Mechanical characteristics	
Min. permitted bending radius	One time: 7.5 x cable diameter Multiple times: 15 x cable diameter
Max. permitted tensile load	Static: 50 N/mm² Dynamic: 20 N/mm²
Weight	Approx. 78 kg/km
Thermal characteristics	
moving	-20 °C to 70 °C
Stationary	-40 °C to 70 °C

Note

Dimensioned drawing

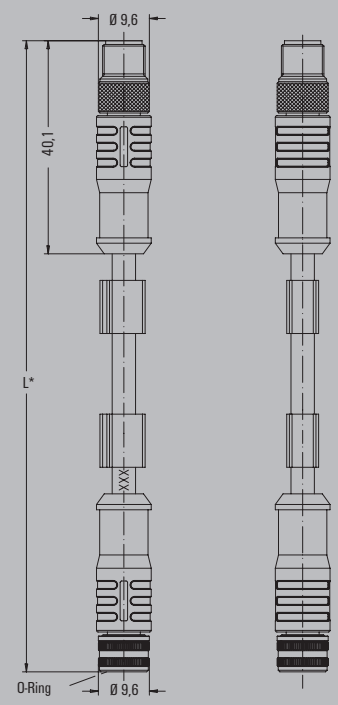

L in the drawing is the cable length

Ordering data

	Type	Qty.	2-pole Order No.
0.2 m	SAIL-M8GM8G-4S-0.2-CAN		1216820020
0.25 m	SAIL-M8GM8G-4S-0.25-CAN		1216820025
0.3 m	SAIL-M8GM8G-4S-0.3-CAN		1216820030
0.5 m	SAIL-M8GM8G-4S-0.5-CAN		1216820050
0.8 m	SAIL-M8GM8G-4S-0.8-CAN		1216820080
1.0 m	SAIL-M8GM8G-4S-1.0-CAN		1216820100
1.5 m	SAIL-M8GM8G-4S-1.5-CAN		1216820150
3.0 m	SAIL-M8GM8G-4S-3.0-CAN		1216820300
3.5 m	SAIL-M8GM8G-4S-3.5-CAN		1216820350
5.0 m	SAIL-M8GM8G-4S-5.0-CAN		1216820500
7.0 m	SAIL-M8GM8G-4S-7.0-CAN		1216820700
10.0 m	SAIL-M8GM8G-4S-10-CAN		1216821000

Note

The four-pole Standard M8 sensor cables are especially well suited for the Universal Pro system.
With their diameter of 0.34 mm², these cables allow a system to be expanded up to 50 meters.
The 360° shielding guarantees that signal transmission is error-free.

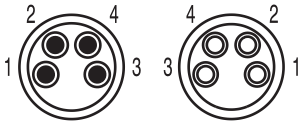

Male **Female**

Universal Pro cables

Terminating resistor

Technical data

Cable construction	
No. of poles	4
Sheathing colour	grey
Material	PUR/PUR
Core cross-section	0.34 mm²
Contact surface	Gold-plated
Nominal voltage	30 V
Rated current	4 A
Protection class	IP 67
Ambient temperature, min.	-30 °C
Ambient temperature, max.	90 °C
Note	

Ordering data

Male, straight - female, straight	Type	Qty.	Order No.
0.3 m	SAIL-M8GM8G-4S-0.3Q-SB	1	1981900030
1.0 m	SAIL-M8GM8G-4S-1.0Q-SB	1	1981900100
1.5 m	SAIL-M8GM8G-4S-1.5U-SB	1	1981900150
3.0 m	SAIL-M8GM8G-4S-3.0Q-SB	1	1981900300
5.0 m	SAIL-M8GM8G-4S-5.0Q-SB	1	1981900500
10.0 m	SAIL-M8GM8G-4S-10Q-SB	1	1981901000
15.0 m	SAIL-M8GM8G-4S-15Q-SB	1	1981901500
20.0 m	SAIL-M8GM8G-4S-20Q-SB	1	1981902000
Female, straight - open end			
1.5 m	SAIL-M8BG-4S-1.5U-SB	1	1981910150
3.0 m	SAIL-M8BG-4S-3.0Q-SB	1	1981910300
5.0 m	SAIL-M8BG-4S-5.0Q-SB	1	1981910500
10.0 m	SAIL-M8BG-4S-10Q-SB	1	1981911000
Note	Other versions on request		

Ordering data – Terminating resistor

	Type	Qty.	Order No.
	SAI END CAN M8 4P	1	1955340000
Note			

Dimensioned drawing

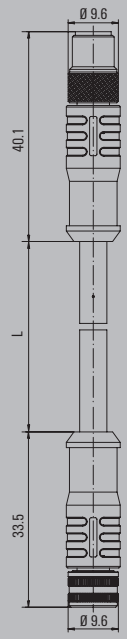

L in the drawing is the cable length

CAN / DeviceNet™ bulk lengths

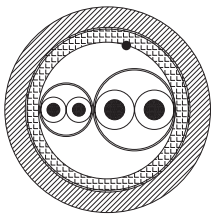

Technical data

Component A (1x2x0.34) ST	
Conductor	Tin-plated copper 0.34 mm2 (19 wires) according to UL 1581 Tab 20.1
Insulation	Polyolefine mixture according to UL Style 80 °C 30 V colour code: 2 conductor red/black Diameter: 1.6 ±0.1 mm
Assembly	Two twisted conductors + aluminium-polyester band (Ai exterior)
Element B (1x2x0.22) ST	
Conductor	Tin-plated copper 0.22 mm² (19 wires) according to UL 1581 Tab 20.1
Insulation	Polyethylene foam skin Colour code: 2 conductors white/blue Diameter: approx. 2.0 mm
Assembly	Two twisted conductors + aluminium-polyester band (Ai exterior)
Complete assembly	Element A + Element B drilled
Drain wire	Tin-plated copper 0.34 mm² (19 wires) according to UL 1581 Tab 20.1
Shield	Tin-plated copper braiding, coverage 85 ± 5 %
Band	Fibre band
Outer cladding	Polyurethane mixture according to UL Style 80 °C 30 V Colour code: black RAL 9005
Marking	Not required
General characteristics	
Nom. impedance 0.3-20 MHz	(pair 2 x 0.22 mm²) - 120 ±10 % Ω
Nominal power rating 800 Hz	(pair 2 x 0.22 mm²) - 39 pF/mt
Operating voltage	Low-voltage computer cable
Test voltage	1000 V
Conductor resistance	Conductor A: max. 55 Ω/km at 20 °C Conductor B: max. 90 Ω/km at 20 °C
Min. bending radius	5 x D (during installation) 10 x D (during operations)
Temperature range	-40 °C...+80 °C (during installation) -10 °C ... +80 °C (during operations)
Reference	UL 1581
Attenuation (max.)	0.5 MHz ... 1.64 bd/100 mt
(pair 0.22 mm²)	1.0 MHz ... 2.30 db/100 mt
Max. speed	180 mt/min
Max. acceleration	5 mt/s²
Copper weight	33.6 kg/km (approx.)
Total weight	79 kg/km (approx.)

Note	

Ordering data

	Type	Order No.
4-pole	SAIH-CD-2x0.34/2x0.22-PURs	1058630000
Note		

Screw connection M12, metal (EMC)

SAIS / SAIB

straight

SAISW / SAIBW

Angled

Ordering data

Male			
	5-pole. PG 9		
Socket			
	5-pole. PG 9		
Note			

Type	Qty.	Order No.
SAIS-M-5/8S M12 5P A-COD	1	1784740000
SAIB-M-5/8S M12 5P A-COD	1	1784750000
Other versions on request		

Type	Qty.	Order No.
SAISW-M-5/8 M12	1	1803940000
SAIBW-M-5/8 M12	1	1803920000
Other versions on request		

Technical data

Type of connection	Screw connection	Screw connection
Housing main material	CuZn	CuZn
Contact tube diameter	M12	M12
Cable diameter	4...6 mm (PG7)/ 6...8 mm (PG9)	6...8 mm (PG9)
Wire cross-section, min. / max.	0.14...0.75 mm²	0.14...0.5 mm²
Rated current	4 A	4 A
Rated voltage	125 V	125 V
Temperature range of housing	-25...+85 °C	-25...+85 °C
Protection degree	IP 67	IP 67
Contact surface	Gold-plated	Gold-plated
Note	Torque, see E.12	Torque, see E.12

Torque, see E.12

Dimensioned drawing

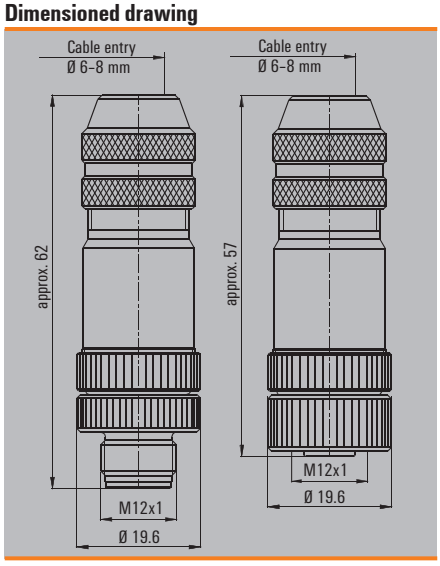

Dimensioned drawing

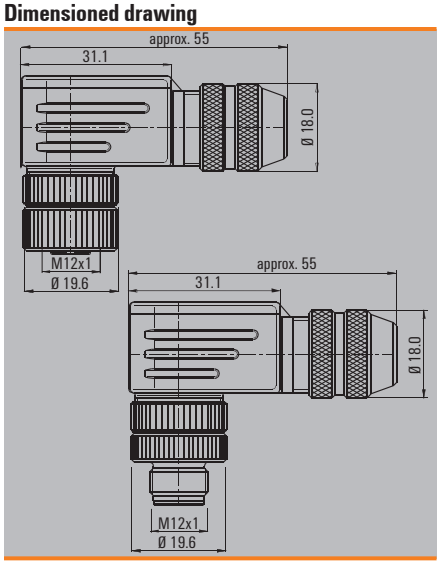

EtherCAT - lines (M8)

EtherCAT lines

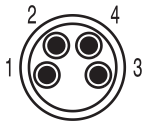

Male

RJ45

Ordering data

	M8 Male-Open-Ended	4-pole	M8 Male-Male	4-pole	M8 Male-RJ45	4-pole
	Type	Order No.	Type	Order No.	Type	Order No.
0.1 m	SAIL-M8G-4S0.1UIE	1160820010	SAIL-M8GM8SG-4S0.1UIE	1160930010		
0.3 m	SAIL-M8G-4S0.3UIE	1160820030	SAIL-M8GM8SG-4S0.3UIE	1160930030		
0.5 m	SAIL-M8G-4S0.5UIE	1160820050	SAIL-M8GM8SG-4S0.5UIE	1160930050		
1.0 m	SAIL-M8G-4S1.0UIE	1160820100	SAIL-M8GM8SG-4S1.0UIE	1160930100		
2.0 m	SAIL-M8G-4S2.0UIE	1160820200	SAIL-M8GM8SG-4S2.0UIE	1160930200	SAIL-M8GRJ45-4S2.0UIE	1201210200
3.0 m	SAIL-M8G-4S3.0UIE	1160820300	SAIL-M8GM8SG-4S3.0UIE	1160930300		
4.0 m	SAIL-M8G-4S4.0UIE	1160820400	SAIL-M8GM8SG-4S4.0UIE	1160930400		
5.0 m	SAIL-M8G-4S5.0UIE	1160820500	SAIL-M8GM8SG-4S5.0UIE	1160930500	SAIL-M8GRJ45-4S5.0UIE	1201210500
7.5 m	SAIL-M8G-4S7.5UIE	1160820750	SAIL-M8GM8SG-4S7.5UIE	1160930750	SAIL-M8GRJ45-4S7.5UIE	1201210750
10.0 m	SAIL-M8G-4S10UIE	1160821000			SAIL-M8GRJ45-4S10UIE	1201211000
15.0 m			SAIL-M8GM8SG-4S15UIE	1160931500		
20.0 m			SAIL-M8GM8SG-4S20UIE	1160932000		
30.0 m			SAIL-M8GM8SG-4S30UIE	1160933000		
40.0 m			SAIL-M8GM8SG-4S40UIE	1160934000		
50.0 m			SAIL-M8GM8SG-4S50UIE	1160935000		
Note						

Standard cable lengths

All cables listed under the ordering data have a length of 1.5 metres. The last four ordering digits must be changed when ordering other standard cable lengths.	1.5 m	xxxxxx0150
	3.0 m	xxxxxx0300
	5.0 m	xxxxxx0500
	10.0 m	xxxxxx1000

Technical data

Protection degree	IP 67
Contact surface	Gold-plated
Sheathing colour	Green
Temperature range of housing	-25...+85 °C
Core cross-section	0.15

Chapter W includes additional technical specifications for the cable

Dimensioned drawing

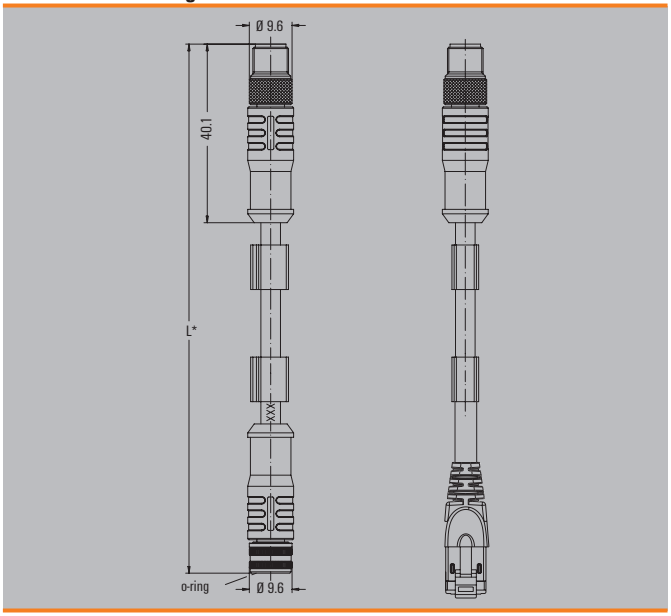

Assembled cable - dragline cable M12

- Cat.5
- PUR
- D-coded
- PROFINET type C

M12 / M12

M12		M12
1	yellow	1
2	white	2
3	orange	3
4	blue	4

M12 / M12

M12		M12
1	yellow	1
2	white	2
3	orange	3
4	blue	4

Technical data

Product type	Dragline cable	Dragline cable
Category	Cat.5 (ISO/IEC 11801) / Cat.5e (TIA T568-B)	Cat.5 (ISO/IEC 11801) / Cat.5e (TIA T568-B)
Shielding	SF/UTP	SF/UTP
Version connector left / Version connector right	M12 IP 67 straight male / M12 IP 67 straight male	M12 IP 67 straight male / M12 IP 67 straight socket
Cross-section	4*AWG 22/7 - 0.36 mm²	4*AWG 22/7 - 0.36 mm²
Sheath diameter, max.	6.7 mm	6.7 mm
Material sheath	PUR	PUR
Sheathing colour	green (RAL 6018)	green (RAL 6018)
Insulation cross-section	1.5 mm	1.5 mm
Min. bending radius, repetitive	7.5 *diameter	7.5 *diameter
Min. bending radius, once only	5 *diameter	5 *diameter
Bending cycles	3 Mio	3 Mio
Speed	180 m/min	180 m/min
Acceleration	4 m/s²	4 m/s²
Pulling force	≤ 150 N	≤ 150 N
Ambient temperature (operational)	-40 °C...+70 °C	-40 °C...+70 °C
Installation temperature	-20 °C...+60 °C	-20 °C...+60 °C
Storage temperature	-50 °C...+70 °C	-50 °C...+70 °C
Abrasion resistance	very good	very good
Halogen	in accordance with IEC 60754-2	in accordance with IEC 60754-2
Resistance to spread of flame	in accordance with IEC 60332-1	in accordance with IEC 60332-1
Resistance to oils	in accordance with IEC 60811-2-1	in accordance with IEC 60811-2-1
Note		

Ordering data

	Type	QTY	Order No.	Type	QTY	Order No.
0,5 m	IE-C5DD4UG0005MCSMCS-E	1	1025950005			
1,5 m	IE-C5DD4UG0015MCSMCS-E	1	1025950015	IE-C5DD4UG0015MSSMCS-E	1	1059330015
3 m	IE-C5DD4UG0030MCSMCS-E	1	1025950030	IE-C5DD4UG0030MSSMCS-E	1	1059330030
5 m	IE-C5DD4UG0050MCSMCS-E	1	1025950050	IE-C5DD4UG0050MSSMCS-E	1	1059330050
10 m	IE-C5DD4UG0100MCSMCS-E	1	1025950100	IE-C5DD4UG0100MSSMCS-E	1	1059330100
Note						

Accessories

	Type	QTY	Order No.	Type	QTY	Order No.
Sheathing stripper						
For UTP and STP data cables	AM 12	1	9030060000	AM 12	1	9030060000
For coaxial and round data cables	IE-CST	1	9204350000	IE-CST	1	9204350000
Markers						
Insertion label, yellow, 12 mm	TM-I 12 NEUTRAL GE	320	1718411687	TM-I 12 NEUTRAL GE	320	1718411687
Insertion label, yellow, 18 mm	TM-I 18 NEUTRAL GE	320	1718431687	TM-I 18 NEUTRAL GE	320	1718431687
Transparent sleeves, 12-mm length	TM 4/12 HF/HB	500	1719840000	TM 4/12 HF/HB	500	1719840000
Transparent sleeves, 18-mm length	TM 4/18 HF/HB	500	1719850000	TM 4/18 HF/HB	500	1719850000
Wire and cable marker, ø 4,7 - 7,4 mm	VT SF 5/21 NEUTRAL WS V0	160	1689470001	VT SF 5/21 NEUTRAL WS V0	160	1689470001
Wire and cable marker, ø 5,8 - 7,8 mm	VT SF 6/21 NEUTRAL WS V0	160	1730560001	VT SF 6/21 NEUTRAL WS V0	160	1730560001
Note						

Assembled cable - dragline cable M12

- Cat.5
- PUR
- D-coded
- PROFINET type C

M12 / open

	M12
yellow	1
white	2
orange	3
blue	4

M12 / RJ45

RJ45		M12
1	yellow	1
3	white	2
2	orange	3
6	blue	4

Technical data

Product type	Dragline cable	Dragline cable
Category	Cat.5 (ISO/IEC 11801) / Cat.5e (TIA T568-B)	Cat.5 (ISO/IEC 11801) / Cat.5e (TIA T568-B)
Shielding	SF/UTP	SF/UTP
Version connector left / Version connector right	M12 IP 67 straight male / Open	M12 IP 67 straight male / RJ45 IP 20
Cross-section	4*AWG 22/7 - 0.36 mm²	4*AWG 22/7 - 0.36 mm²
Sheath diameter, max.	6.7 mm	6.7 mm
Material sheath	PUR	PUR
Sheathing colour	green (RAL 6018)	green (RAL 6018)
Insulation cross-section	1.5 mm	1.5 mm
Min. bending radius, repetitive	7.5 *diameter	7.5 *diameter
Min. bending radius, once only	5 *diameter	5 *diameter
Bending cycles	3 Mio	3 Mio
Speed	180 m/min	180 m/min
Acceleration	4 m/s²	4 m/s²
Pulling force	≤ 150 N	≤ 150 N
Ambient temperature (operational)	-40 °C...+70 °C	-40 °C...+70 °C
Installation temperature	-20 °C...+60 °C	-20 °C...+60 °C
Storage temperature	-50 °C...+70 °C	-50 °C...+70 °C
Abrasion resistance	very good	very good
Halogen	in accordance with IEC 60754-2	in accordance with IEC 60754-2
Resistance to spread of flame	in accordance with IEC 60332-1	in accordance with IEC 60332-1
Resistance to oils	in accordance with IEC 60811-2-1	in accordance with IEC 60811-2-1
Note		

Ordering data

	Type	QTY	Order No.	Type	QTY	Order No.
1 m				IE-C5DD4UG0010MCSA20-E	1	**1044470010**
1,5 m	IE-C5DD4UG0015MCSXXX-X	1	**1025940015**	IE-C5DD4UG0015MCSA20-E	1	**1044470015**
3 m	IE-C5DD4UG0030MCSXXX-X	1	**1025940030**	IE-C5DD4UG0030MCSA20-E	1	**1044470030**
5 m	IE-C5DD4UG0050MCSXXX-X	1	**1025940050**	IE-C5DD4UG0050MCSA20-E	1	**1044470050**
10 m	IE-C5DD4UG0100MCSXXX-X	1	**1025940100**	IE-C5DD4UG0100MCSA20-E	1	**1044470100**
Note						

Accessories

Sheathing stripper	Type	QTY	Order No.	Type	QTY	Order No.
For UTP and STP data cables	AM 12	1	**9030060000**	AM 12	1	**9030060000**
For coaxial and round data cables	IE-CST	1	**9204350000**	IE-CST	1	**9204350000**
Markers						
Insertion label, yellow, 12 mm	TM-I 12 NEUTRAL GE	320	**1718411687**	TM-I 12 NEUTRAL GE	320	**1718411687**
Insertion label, yellow, 18 mm	TM-I 18 NEUTRAL GE	320	**1718431687**	TM-I 18 NEUTRAL GE	320	**1718431687**
Transparent sleeves, 12-mm length	TM 4/12 HF/HB	500	**1719840000**	TM 4/12 HF/HB	500	**1719840000**
Transparent sleeves, 18-mm length	TM 4/18 HF/HB	500	**1719850000**	TM 4/18 HF/HB	500	**1719850000**
Wire and cable marker, ø 4,7 - 7,4 mm	VT SF 5/21 NEUTRAL WS V0	160	**1689470001**	VT SF 5/21 NEUTRAL WS V0	160	**1689470001**
Wire and cable marker, ø 5,8 - 7,8 mm	VT SF 6/21 NEUTRAL WS V0	160	**1730560001**	VT SF 6/21 NEUTRAL WS V0	160	**1730560001**
Note						

Assembled cable - M12 dragline cable, angled

- Cat.5
- PUR
- D-coded
- PROFINET type C

M12 / M12

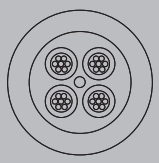

M12 / M12

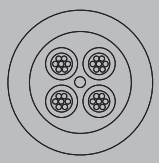

Technical data

Product type	Dragline cable	Dragline cable
Category	Cat.5 (ISO/IEC 11801) / Cat.5e (TIA T568-B)	Cat.5 (ISO/IEC 11801) / Cat.5e (TIA T568-B)
Shielding	SF/UTP	SF/UTP
Version connector left / Version connector right	M12 IP 67 straight male / M12 IP 67 angled male	M12 IP 67 angled male / M12 IP 67 angled male
Cross-section	4*AWG 22/7 - 0.36 mm²	4*AWG 22/7 - 0.36 mm²
Sheath diameter, max.	6.7 mm	6.7 mm
Material sheath	PUR	PUR
Sheathing colour	green (RAL 6018)	green (RAL 6018)
Insulation cross-section	1.5 mm	1.5 mm
Min. bending radius, repetitive	7.5 *diameter	7.5 *diameter
Ambient temperature (operational)	-40 °C...+70 °C	-40 °C...+70 °C
Installation temperature	-20 °C...+60 °C	-20 °C...+60 °C
Storage temperature	-50 °C...+70 °C	-50 °C...+70 °C
Abrasion resistance	very good	very good
Halogen	in accordance with IEC 60754-2	in accordance with IEC 60754-2
Resistance to oils	in accordance with IEC 60811-2-1	in accordance with IEC 60811-2-1
Fire safety for railway vehicles		

Note

Ordering data

Cat.5 PROFINET, PUR, M12 straight-M12 angled	Type	QTY	Order No.	Type	QTY	Order No.
1,5 m	IE-C5DD4UG0015MCSMCA-E	1	**1059770015**			
3,0 m	IE-C5DD4UG0030MCSMCA-E	1	**1059770030**			
5,0 m	IE-C5DD4UG0050MCSMCA-E	1	**1059770050**			
10,0 m	IE-C5DD4UG0100MCSMCA-E	1	**1059770100**			
Cat.5 PROFINET, PUR, M12 angled-M12 angled						
1,5 m				IE-C5DD4UG0015MCAMCA-E	1	**1059890015**
3,0 m				IE-C5DD4UG0030MCAMCA-E	1	**1059890030**
5,0 m				IE-C5DD4UG0050MCAMCA-E	1	**1059890050**
10,0 m				IE-C5DD4UG0100MCAMCA-E	1	**1059890100**
Cat.5, PUR, M12 angled-open						
1,5 m						
3,0 m						
5,0 m						
10,0 m						

Note

Accessories

Markers	Type	QTY	Order No.	Type	QTY	Order No.
Insertion label, yellow, 12 mm	TM-I 12 NEUTRAL GE	320	**1718411687**	TM-I 12 NEUTRAL GE	320	**1718411687**
Insertion label, yellow, 18 mm	TM-I 18 NEUTRAL GE	320	**1718431687**	TM-I 18 NEUTRAL GE	320	**1718431687**
Transparent sleeves, 12-mm length	TM 4/12 HF/HB	500	**1719840000**	TM 4/12 HF/HB	500	**1719840000**
Transparent sleeves, 18-mm length	TM 4/18 HF/HB	500	**1719850000**	TM 4/18 HF/HB	500	**1719850000**

Note

Assembled cable - M12 dragline cable, angled

- Cat.5
- PUR
- D-coded
- PROFINET type C

M12 / open

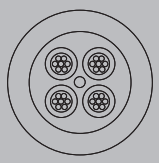

Technical data

Product type	Dragline cable
Category	Cat.5 (ISO/IEC 11801) / Cat.5e (TIA T568-B)
Shielding	SF/UTP
Version connector left / Version connector right	M12 IP 67 angled male / Open
Cross-section	4*AWG 22/7 - 0.36 mm²
Sheath diameter, max.	6.7 mm
Material sheath	PUR
Sheathing colour	green (RAL 6018)
Insulation cross-section	1.5 mm
Min. bending radius, repetitive	7.5 *diameter
Ambient temperature (operational)	-40 °C...+70 °C
Installation temperature	-20 °C...+60 °C
Storage temperature	-50 °C...+70 °C
Abrasion resistance	very good
Halogen	in accordance with IEC 60754-2
Resistance to oils	in according with IEC 60811-2-1
Fire safety for railway vehicles	

Note

Ordering data

	Type	QTY	Order No.
Cat.5 PROFINET, PUR, M12 straight-M12 angled			
1,5 m			
3,0 m			
5,0 m			
10,0 m			
Cat.5 PROFINET, PUR, M12 angled-M12 angled			
1,5 m			
3,0 m			
5,0 m			
10,0 m			
Cat.5, PUR, M12 angled-open			
1,5 m	IE-C5DD4UG0015MCAXXX-X	1	**1059750015**
3,0 m	IE-C5DD4UG0030MCAXXX-X	1	**1059750030**
5,0 m	IE-C5DD4UG0050MCAXXX-X	1	**1059750050**
10,0 m	IE-C5DD4UG0100MCAXXX-X	1	**1059750100**

Note

Accessories

Markers	Type	QTY	Order No.
Insertion label, yellow, 12 mm	TM-I 12 NEUTRAL GE	320	**1718411687**
Insertion label, yellow, 18 mm	TM-I 18 NEUTRAL GE	320	**1718431687**
Transparent sleeves, 12-mm length	TM 4/12 HF/HB	500	**1719840000**
Transparent sleeves, 18-mm length	TM 4/18 HF/HB	500	**1719850000**

Note

Assembled cable - railway cable M12

- Cat.5
- Radox
- D-coded

M12 / M12

M12		M12
1	yellow	1
2	white	2
3	orange	3
4	blue	4

M12 / M12

M12		M12
1	yellow	1
2	white	2
3	orange	3
4	blue	4

Technical data

Product type	System cable	System cable
Category	Cat.5 (ISO/IEC 11801) / Cat.5e (TIA T568-B)	Cat.5 (ISO/IEC 11801) / Cat.5e (TIA T568-B)
Shielding	SF/UTP	SF/UTP
Version connector left / Version connector right	M12 IP 67 straight male / M12 IP 67 straight male	M12 IP 67 straight male / M12 IP 67 straight socket
Cross-section	2*2*AWG 22/7 - 2*2*0.36 mm²	2*2*AWG 22/7 - 2*2*0.36 mm²
Sheath diameter, max.	7.55 mm	7.55 mm
Material sheath	Radox GKW S	Radox GKW S
Sheathing colour	Black	Black
Insulation cross-section	1.95 mm	1.95 mm
Min. bending radius, repetitive	6 *diameter	6 *diameter
Ambient temperature (operational)	-40 °C...+90 °C	-40 °C...+90 °C
Installation temperature	-25 °C...+90 °C	-25 °C...+90 °C
Storage temperature	-40 °C...+90 °C	-40 °C...+90 °C
Abrasion resistance	very good	very good
Halogen	in accordance with IEC 60754-2	in accordance with IEC 60754-2
Resistance to oils	in accordance with EN 50306-3	in accordance with EN 50306-3
Fire safety for railway vehicles	According to DIN 5510-2 fire safety levels 1,2,3,4, According to BS 6853, According to EN50288-2-2	According to DIN 5510-2 fire safety levels 1,2,3,4, According to BS 6853, According to EN50288-2-2
Note		

Ordering data

	Type	QTY	Order No.	Type	QTY	Order No.
1,5 m	IE-C5DB4RE0015MCSMCS-E	1	**1010850015**	IE-C5DB4RE0015MSSMCS-E	1	**1059340015**
3 m	IE-C5DB4RE0030MCSMCS-E	1	**1010850030**	IE-C5DB4RE0030MSSMCS-E	1	**1059340030**
5 m	IE-C5DB4RE0050MCSMCS-E	1	**1010850050**	IE-C5DB4RE0050MSSMCS-E	1	**1059340050**
10 m	IE-C5DB4RE0100MCSMCS-E	1	**1010850100**	IE-C5DB4RE0100MSSMCS-E	1	**1059340100**

Note

Accessories

Sheathing stripper	Type	QTY	Order No.	Type	QTY	Order No.
For UTP and STP data cables	AM 12	1	**9030060000**	AM 12	1	**9030060000**
For coaxial and round data cables	IE-CST	1	**9204350000**	IE-CST	1	**9204350000**
Markers						
Insertion label, yellow, 12 mm	TM-I 12 NEUTRAL GE	320	**1718411687**	TM-I 12 NEUTRAL GE	320	**1718411687**
Insertion label, yellow, 18 mm	TM-I 18 NEUTRAL GE	320	**1718431687**	TM-I 18 NEUTRAL GE	320	**1718431687**
Transparent sleeves, 12-mm length	TM 4/12 HF/HB	500	**1719840000**	TM 4/12 HF/HB	500	**1719840000**
Transparent sleeves, 18-mm length	TM 4/18 HF/HB	500	**1719850000**	TM 4/18 HF/HB	500	**1719850000**
Wire and cable marker, ø 4,7 - 7,4 mm	VT SF 5/21 NEUTRAL WS V0	160	**1689470001**	VT SF 5/21 NEUTRAL WS V0	160	**1689470001**
Wire and cable marker, ø 5,8 - 7,8 mm	VT SF 6/21 NEUTRAL WS V0	160	**1730560001**	VT SF 6/21 NEUTRAL WS V0	160	**1730560001**

Note

Assembled cable - railway cable M12

- Cat.5
- Radox
- D-coded

M12 / open

	M12
yellow	1
white	2
orange	3
blue	4

Technical data

Product type	System cable
Category	Cat.5 (ISO/IEC 11801) / Cat.5e (TIA T568-B)
Shielding	SF/UTP
Version connector left / Version connector right	M12 IP 67 straight male / Open
Cross-section	2*2*AWG 22/7 - 2*2*0.36 mm²
Sheath diameter, max.	7.55 mm
Material sheath	Radox GKW S
Sheathing colour	Black
Insulation cross-section	1.95 mm
Min. bending radius, repetitive	6 *diameter
Ambient temperature (operational)	-40 °C...+90 °C
Installation temperature	-25 °C...+90 °C
Storage temperature	-40 °C...+90 °C
Abrasion resistance	very good
Halogen	in accordance with IEC 60754-2
Resistance to oils	in accordance with EN 50306-3
Fire safety for railway vehicles	According to DIN 5510-2 fire safety levels 1,2,3,4, According to BS 6853, According to EN50288-2-2

Note

Ordering data

	Type	QTY	Order No.
1,5 m	IE-C5DB4RE0015MCSXXX-X	1	1010840015
3 m	IE-C5DB4RE0030MCSXXX-X	1	1010840030
5 m	IE-C5DB4RE0050MCSXXX-X	1	1010840050
10 m	IE-C5DB4RE0100MCSXXX-X	1	1010840100

Note

Accessories

Sheathing stripper	Type	QTY	Order No.
For UTP and STP data cables	AM 12	1	9030060000
For coaxial and round data cables	IE-CST	1	9204350000
Markers			
Insertion label, yellow, 12 mm	TM-I 12 NEUTRAL GE	320	1718411687
Insertion label, yellow, 18 mm	TM-I 18 NEUTRAL GE	320	1718431687
Transparent sleeves, 12-mm length	TM 4/12 HF/HB	500	1719840000
Transparent sleeves, 18-mm length	TM 4/18 HF/HB	500	1719850000
Wire and cable marker, ø 4,7 - 7,4 mm	VT SF 5/21 NEUTRAL WS V0	160	1689470001
Wire and cable marker, ø 5,8 - 7,8 mm	VT SF 6/21 NEUTRAL WS V0	160	1730560001

Note

Assembled cable - railway cable M12

- Cat.5
- Radox
- D-coded

M12 / M12

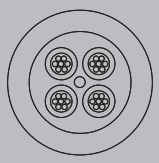

M12 / M12

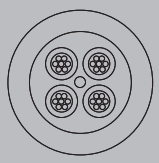

Technical data

Product type	System cable	System cable
Category	Cat.5 (ISO/IEC 11801) / Cat.5e (TIA T568-B)	Cat.5 (ISO/IEC 11801) / Cat.5e (TIA T568-B)
Shielding	SF/UTP	SF/UTP
Version connector left / Version connector right	M12 IP 67 straight male / M12 IP 67 angled male	M12 IP 67 angled male / M12 IP 67 angled male
Cross-section	2*2*AWG 22/7 - 2*2*0.36 mm²	2*2*AWG 22/7 - 2*2*0.36 mm²
Sheath diameter, max.	7.55 mm	7.55 mm
Material sheath	Radox GKW S	Radox GKW S
Sheathing colour	Black	Black
Insulation cross-section	1.95 mm	1.95 mm
Min. bending radius, repetitive	6 *diameter	6 *diameter
Ambient temperature (operational)	-40 °C...+90 °C	-40 °C...+90 °C
Installation temperature	-25 °C...+90 °C	-25 °C...+90 °C
Storage temperature	-40 °C...+90 °C	-40 °C...+90 °C
Abrasion resistance	very good	very good
Halogen	in accordance with IEC 60754-2	in accordance with IEC 60754-2
Resistance to oils	in accordance with EN 50306-3	in accordance with EN 50306-3
Fire safety for railway vehicles	According to DIN 5510-2 fire safety levels 1,2,3,4, According to BS 6853, According to EN50288-2-2	According to DIN 5510-2 fire safety levels 1,2,3,4, According to BS 6853, According to EN50288-2-2
Note		

Ordering data

	Type	QTY	Order No.	Type	QTY	Order No.
1,5 m	IE-C5DB4RE0015MCSMCA-E	1	**1059940015**	IE-C5DB4RE0015MCAMCA-E	1	**1059970015**
3 m	IE-C5DB4RE0030MCSMCA-E	1	**1059940030**	IE-C5DB4RE0030MCAMCA-E	1	**1059970030**
5 m	IE-C5DB4RE0050MCSMCA-E	1	**1059940050**	IE-C5DB4RE0050MCAMCA-E	1	**1059970050**
10 m	IE-C5DB4RE0100MCSMCA-E	1	**1059940100**	IE-C5DB4RE0100MCAMCA-E	1	**1059970100**

Note

Accessories

Markers	Type	QTY	Order No.	Type	QTY	Order No.
Insertion label, yellow, 12 mm	TM-I 12 NEUTRAL GE	320	**1718411687**	TM-I 12 NEUTRAL GE	320	**1718411687**
Insertion label, yellow, 18 mm	TM-I 18 NEUTRAL GE	320	**1718431687**	TM-I 18 NEUTRAL GE	320	**1718431687**
Transparent sleeves, 12-mm length	TM 4/12 HF/HB	500	**1719840000**	TM 4/12 HF/HB	500	**1719840000**
Transparent sleeves, 18-mm length	TM 4/18 HF/HB	500	**1719850000**	TM 4/18 HF/HB	500	**1719850000**

Note

Assembled cable - railway cable M12

- Cat.5
- Radox
- D-coded

M12 / open

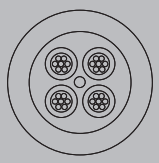

Technical data

Product type	System cable
Category	Cat.5 (ISO/IEC 11801) / Cat.5e (TIA T568-B)
Shielding	SF/UTP
Version connector left / Version connector right	M12 IP 67 angled male / Open
Cross-section	2*2*AWG 22/7 - 2*2*0.36 mm²
Sheath diameter, max.	7.55 mm
Material sheath	Radox GKW S
Sheathing colour	Black
Insulation cross-section	1.95 mm
Min. bending radius, repetitive	6 *diameter
Ambient temperature (operational)	-40 °C...+90 °C
Installation temperature	-25 °C...+90 °C
Storage temperature	-40 °C...+90 °C
Abrasion resistance	very good
Halogen	in accordance with IEC 60754-2
Resistance to oils	in accordance with EN 50306-3
Fire safety for railway vehicles	According to DIN 5510-2 fire safety levels 1,2,3,4, According to BS 6853, According to EN50288-2-2

Note

Ordering data

	Type	QTY	Order No.
1,5 m	IE-C5DB4RE0015MCAXXX-X	1	1059900015
3 m	IE-C5DB4RE0030MCAXXX-X	1	1059900030
5 m	IE-C5DB4RE0050MCAXXX-X	1	1059900050
10 m	IE-C5DB4RE0100MCAXXX-X	1	1059900100

Note

Accessories

Markers	Type	QTY	Order No.
Insertion label, yellow, 12 mm	TM-I 12 NEUTRAL GE	320	1718411687
Insertion label, yellow, 18 mm	TM-I 18 NEUTRAL GE	320	1718431687
Transparent sleeves, 12-mm length	TM 4/12 HF/HB	500	1719840000
Transparent sleeves, 18-mm length	TM 4/18 HF/HB	500	1719850000

Note

Screw connection M12, metal (EMC)
D-coded

Industrial Ethernet

SAISM / SAIBM

straight

SAISW

angled

Ordering data

Male		Type	Qty.	Order No.	Type	Qty.	Order No.
	4-pole. PG 9	SAISM-4/8S-M12-4P D-COD	1	1892120000	SAISW-4/8S-M12-4P D-COD	1	1160550000
Socket							
	4-pole. PG 9	SAIBM-4/8S-M12-4P D-COD	1	1892130000			
Note							

Technical data

Type of connection	Screw connection	Screw connection
Housing main material	CuZn	CuZn
Contact tube diameter	M12	M12
Cable diameter	6...8 mm (PG9)	6...8 mm (PG9)
Wire cross-section, min. / max.	0.25...0.75 mm²	0.14...0.75 mm²
Rated current	4 A	4 A
Rated voltage	250 V	250 V
Temperature range of housing	-25...+85 °C	-25...+85 °C
Protection degree	IP 67	IP 67
Contact surface	Gold-plated	Gold-plated
Note	Torque, see E.12	Torque, see E.12

Torque, see E.12

Dimensioned drawing

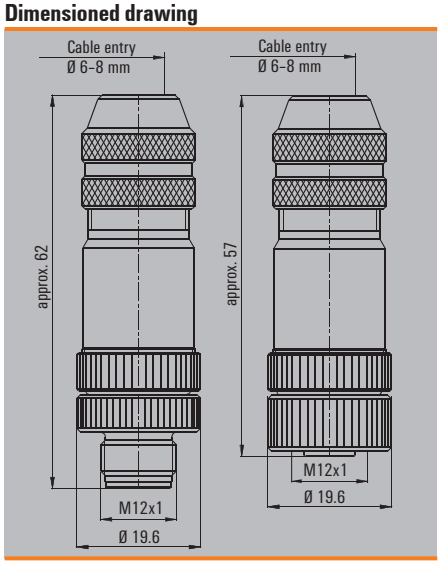

Dimensioned drawing

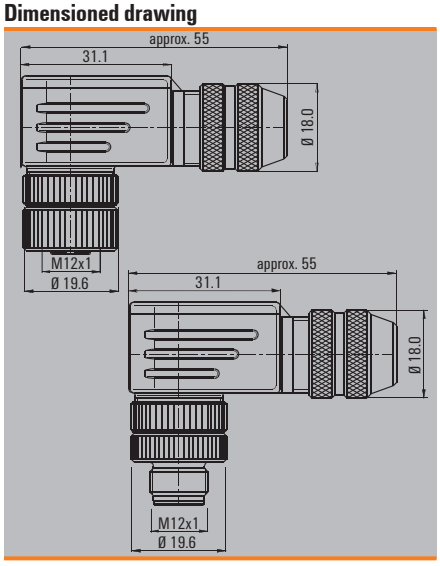

M12 tension-clamp connection, stainless steel D-coded

SAIS / SAIB VA

Industrial Ethernet

Ordering data

Male	
Tension-clamp connection. straight. stainless steel	5-pole. PG 9
Note	

Type	Qty.	Order No.
SAIS 5/9-VA D-COD	1	1920700001

Technical data

Type of connection	Tension clamp connection
Housing main material	1.4404/316L
Contact tube diameter	M12
Cable diameter	6...8 mm (PG9)
Wire cross-section, min. / max.	0.25...0.5 mm²
Rated current	4 A
Rated voltage	125 V
Temperature range of housing	-25...+85 °C
Protection degree	IP 69K
Contact surface	Gold-plated
Note	Torque, see E.12

Dimensioned drawing

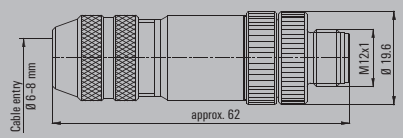

Torque, see E.12

M12 connector / PCB socket
M12 X-type cat. 6_A

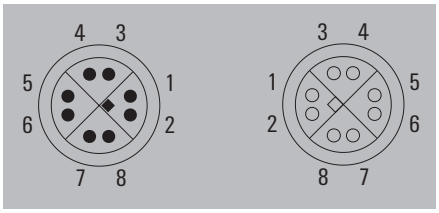

Plug

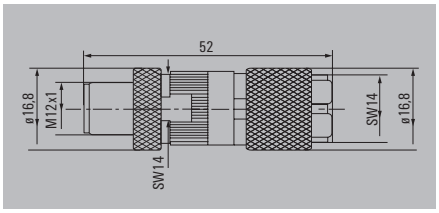

PCB socket

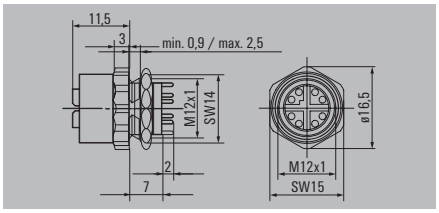

Technical data

Category	Cat.6_A / Class E_A (ISO/IEC 11801 2010)	Cat.6_A / Class E_A (ISO/IEC 11801 2010)
Protection degree	IP 65, IP 67	IP 67 (when screwed in)
Connection 1	M12	M12
Housing main material	Zinc diecast	CuZn
Contact holder materials	PA	
Contact tube diameter	M12	M12
Contact material / Contact surface	CuZn / Gold-plated	
Ambient temperature (operational)	-25 / +85 °C	-25 / +85 °C
Connector standard	IEC 61076-2-109	IEC 61076-2-109
Current-carrying capacity at 50 °C	0.5 A @ 40 °C	0.5 A @ 40 °C
Rated voltage	48 V	48 V
Insulation resistance	100 MΩ	100 MΩ
Plugging cycles	≥ 100	≥ 100
Configuration		Reflow compatible
Shielding	360° all-round enclosure	360° all-round enclosure
Conductor diamter, finely stranded min./max.	0.48 / 0.76 mm	/ mm
Wire cross-section, finely stranded, min. (AWG)	AWG 26 / AWG 22	
Conductor diameter, solid min./max.	0.4 / 0.64 mm	/ mm
Wire cross-section, solid, min. (AWG)	AWG 24 / AWG 22	
Insulation cross-section, max.	1.6 mm	
Sheath diameter, min. / Sheath diameter, max.	5 / 9.7 mm	/ mm
Note		

Ordering data

	Type	QTY	Order No.	Type	QTY	Order No.
pre-assembled	IE-PS-M12X-P-FH	10	**1324020000**	IE-PCB-M12X-S-180	10	**1324010000**
2-piece design				IE-PCB2-M12X-S-180	10	**1393080000**

Note

Accessories

Note

FOUNDATION Fieldbus - connector (7/8")

Plug-in connector FBCon 7/8"

Plug-in connector straight (plug)

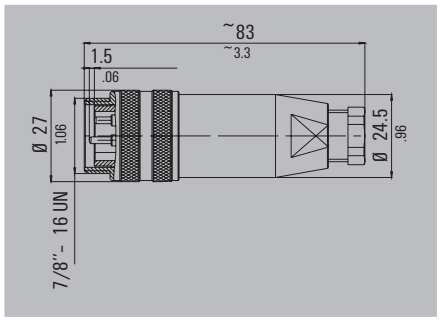

Ordering data — **4-pole**

Type	Qty.	Order No.
FBCon 7/8 ˝ 4P M	1	**1808840000**

Plug-in connector 90° (plug)

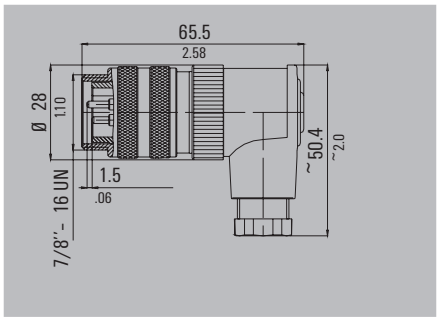

Ordering data — **4-pole**

Type	Qty.	Order No.
FBCon 7/8 ˝ 4P M (A)	1	**1808830000**

Technical data

No. of poles	4
Lock	Screw 7/8" UNF
Cable gland	PG 9
Connection	Screw
Connection cross-section	max. 1,5 mm²
Connection cross-section	16 AWG
Enclosure protection class	IP 67
Mechanical service life	> 500 plugging cycles
Upper limit temperature	+ 85 °C
Lower limit temperature	- 40 °C

Electrical data	
Rated voltage	250 V
Rated surge voltage	4000 V
Polution severity	3
Surge category	II
Insulation material group	III
Test surge voltage	4800 V
Rated current	9 A (40°)
Volume resistivity	≤ 5 mΩ
Insulation resistance	> 10^{10}Ω

Materials		
Contact pins	CuZn	(brass)
Contact surface	Au	(gold)
Socket body	PUR/PA	(UL 94 HB)
Enclosure cable plug	PBT	(UL 94 V-0)
Threaded ring	Anodised aluminium	

Plug-in connector straight (socket)

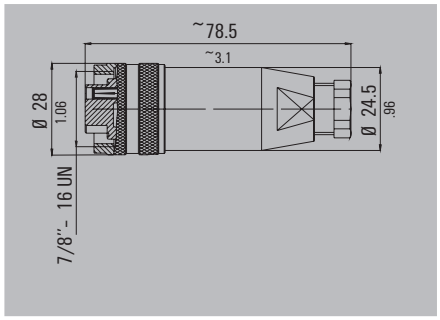

Ordering data — **4-pole**

Type	Qty.	Order No.
FBCon 7/8 ˝ 4P FM	1	**1812480000**

Note: refer also to chapter 7/8"

Plug-in connector 90° (socket)

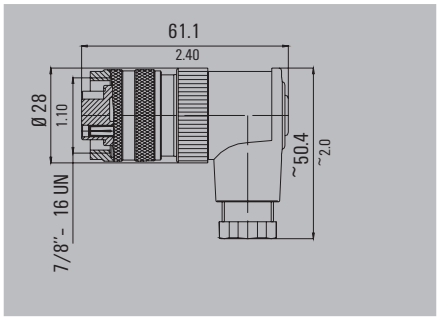

Ordering data — **4-pole**

Type	Qty.	Order No.
FBCon 7/8 ˝ 4P FM (A)	1	**1812470000**

Accessories for fieldbus distributors

Cable glands – plastic – IP 68

Ordering data

Type	Qty.	Order No.
VG M16-1/K68	50	1909860000

Cable glands – brass – IP 68

Ordering data

Type	Qty.	Order No.
VG M16-1/MS68	50	1909910000

Cable glands – brass – 1/EMC

Ordering data

Type	Qty.	Order No.
VG M16-MS 1/EMV	50	1909500000

Cable glands – brass – EEx e, IP 68

Ordering data

Type	Qty.	Order No.
VG M16-EXE MS	50	1737210000

Sealing rings – 9005

Ordering data

Type	Qty.	Order No.
GWDR M16-NP	50	1736230000

Blanking plugs – brass

Ordering data

Type	Qty.	Order No.
VP M16-MS65	100	1777730000

Blanking plugs – plastic – EEx e

Ordering data

Type	Qty.	Order No.
VG M16-EXE SW	50	1737070000

Pressure compensation element – plastic – DAE

Ordering data

Type	Qty.	Order No.
DAE M12 PA short	10	1868560000

For technical data, refer to Catalogue 5 – Enclosures and Cable Glands

M8, M12 Plug in connectors and protective caps

M8, M12 Plug in connectors and protective caps	SAI connectors	D.2
	Customisable connectors	D.4
	Connectors – accessories	D.28
	Built-in plugs	D.32
	Valve plugs for custom assembly	D.40
	Protective sleeve adapter	D.42

SAI connectors

Self assembled M8 and M12 connectors are integral and essential connectivity components. They are available with a wide variety of different wire connection methods. Weidmüller offers all of the secure connection methods, which include screw, tension clamp, IDC or solder connection mechanisms.
One highlight in this line is the shielded, D-coded M-12 connectors. They are available in male and female versions and with tension clamp connection.
The eight pole screw connection connectors are a special favourite. These are available in shielded or unshielded versions.

Fast

The M12 connectors can also come with the tension clamp conductor connection method, either shielded or unshielded.

Versatile

Eight-pole M12 connectors, shielded, with screw connection and a cable outer insulation diameter of 8 – 10 mm.

Proven

M8 connectors with screw connections for the conductor are much easier to assemble compared to connectors which require soldering.

Safe

M8 connectors with shield connections are in increasing demand as the trend towards miniaturisation continues.

M12 connectors
Screw and tension clamp connection

M8 connectors
Screw and solder connection

M8 and M12 connectors
Insulation displacement connection (IDC)

M8 and M12 connectors
T distributor

Protective caps for SAI distributors

M12/M8/M5
Built in connectors

Customisable valve connectors

Overview of M8 and M12 screw connections

M8

M12

M12 Metal

Plugs and sockets (screw connection) for custom assembly to make up M8 and M12 connections.

Machine builders frequently need individual cable lengths. To meet this demand, Weidmüller can supply M8 and M12 plug in connectors for custom assembly.

The plug in connectors are available with different cable gland diameters. In the 90° versions, the outgoing direction of the cable can be changed in 90° steps. The connected plug in connectors comply with IP 67 ingress protection classification. There are also plug in connectors available for double assignment of distributors.

Screwty®

This is the perfect tool for all common cable glands on sensor and actuator cables.

The Screwty® fits M12 and M8 round plugs. Both types can be used for the plugs and sockets on custom cables.

The handle of every Screwty® has a conventional 1/4 inch fitting and can be used for all sizes. Simply turn the tool to tighten or release a round plug.

The Screwty® is also available with a torque fitting. This adjustable attachment can be used for all sizes. The torque can be infinitely adjusted between 0.5 and 1.7 Nm.

IDC-Tool

Weidmüller offers various products with insulation displacement connection for M12 connectors. These include the IDC connection elements, which can be directly screwed to a distributor, such as part nos. 9457720000 and 1766810000.
In addition, there are two M12 IDC adapters with part nos. 1781550001 and 1781540001. All four elements can be fitted by hand with no additional tools. When there are many connections to be made in a day, however, use of the copyright protected IDC tool is recommended. This tool works like a knurled screw on the terminal.

Overview of SAI connector M12

Plastic

Screw connection	straight			angled		
	3-pole	4-pole	5-pole	3-pole	4-pole	5-pole
PG7 Male	1021470000	9457550000	9456940000	1021280000	9457290000	9456950000
PG7 Female	1021490000	9457240000	9457250000	1021310000	9457700000	9457260000
Screw connection						
PG9 Male	1021480000	1807340000	1807350000	1021280000	1807360000	1807370000
PG9 Female	1021510000	1807230000	1807250000	1021310000	1807240000	1807330000
Screw connection	8-pole	12-pole (Solder connection)				
PG 9 Male	1836970000	1924950000				
PG9 Female	1836960000	1924960000				
IDC connection	(0.14 - 0.34 mm²) 4-pole	(0.34 - 0.75 mm²) 4-pole				
Male	1781550001	1852740000				
Female	1781540001	1852730000				
Tension clamp connection			5-pole			
Male			1906390000			
Female			1924970000			

Metal

A-coded	straight			angled		
Screw connection	3-pole	4-pole	5-pole	3-pole	4-pole	5-pole
PG7 Male			1191030000			
PG7 Female			1191020000			
PG9 Male		9455640000	1784740000		1803930000	1803940000
PG9 Female		8426220000	1784750000		1803910000	1803920000
Tension clamp connection						
PG9 Male						
PG9 Female		1784740002				1275750000
B-coded Screw connection						
PG9 Male			1784790000			1944570000
PG9 Female			1784780000			1944580000
D-coded Screw connection						
PG9 Male		1892120000				
PG9 Female		1892130000				
D-coded Screw connection						
PG9 Male		1892120001			1803930001	
PG9 Female		1892130001			1139330000	

Overview of M8 connectors

Plastic

Screw connection	straight			angled		
	3-pole	4-pole	5-pole	3-pole	4-pole	5-pole
Male screw connection	1803860000	1803850000				
Female screw connection	1803870000	1803880000				
Male IDC connection	1784040001	1784060001				
Female IDC connection	1784030001	1784050001				
Male solder connection				1920990000	1921000000	
Female solder connection				1920970000	1920980000	

Metal

	straight			angled		
	3-pole	4-pole	5-pole	3-pole	4-pole	5-pole
Male screw connection	1010060000	1010070000				
Female screw connection	1010080000	1010090000				
Male solder connection	1921030000	1921040000				
Female solder connection	1921010000	1921020000				

Screw connection M12, A-coded

SAIS / SAIB

straight

SAISW / SAIBW

Angled

Ordering data

Male	Type	Qty.	Order No.	Type	Qty.	Order No.
3-pole. PG 7	SAIS-3/7	1	1021470000	SAISW-3/7	1	1021280000
3-pole. PG 9	SAIS-3/9	1	1021480000	SAISW-3/9	1	1021290000
4-pole. PG 7	SAIS-4/7	1	9457550000	SAISW-4/7	1	9457290000
4-pole. PG 9	SAIS-4/9	1	1807340000	SAISW-4/9	1	1807360000
Socket						
3-pole. PG 7	SAIB-3/7	1	1021490000	SAIBW-3/7	1	1021310000
3-pole. PG 9	SAIB-3/9	1	1021510000	SAIBW-3/9	1	1021320000
4-pole. PG 7	SAIB-4/7	1	9457240000	SAIBW-4/7	1	9457700000
4-pole. PG 9	SAIB-4/9	1	1807230000	SAIBW-4/9	1	1807240000
Note	Other versions on request			Other versions on request		

Technical data

Type of connection	Screw connection	Screw connection
Housing main material	PA	PA
Contact tube diameter	M12	M12
Cable diameter	4...6 mm (PG7)/ 6...8 mm (PG9)	4...6 mm (PG7)/ 6...8 mm (PG9)
Wire cross-section, min. / max.	0.14...0.75 mm²	0.14...0.75 mm²
Rated current	4 A	4 A
Rated voltage	250 V	250 V
Temperature range of housing	-25...+85 °C	-25...+85 °C
Protection degree	IP 67	IP 67
Contact surface	CuSnZn	CuSnZn
Note	Torque, see E.12	Torque, see E.12

Torque, see E.12

Dimensioned drawing

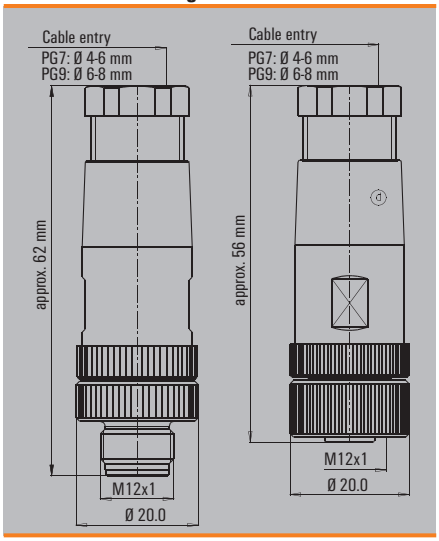

Dimensioned drawing

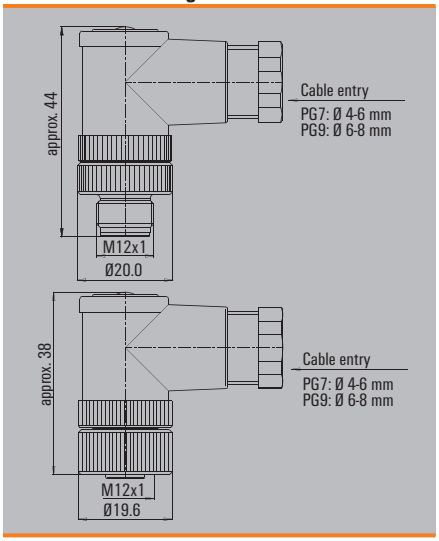

Screw connection M12, A-coded

SAIS / SAIB

straight

SAISW / SAIBW

Angled

Ordering data

Male		Type	Qty.	Order No.	Type	Qty.	Order No.
	5-pole. PG 7	SAIS-5/7	1	**9456940000**	SAISW-5/7	1	**9456950000**
	5-pole. PG 9	SAIS-5/9	1	**1807350000**	SAISW- 5/9	1	**1807370000**
	8-pole. PG 9	SAIS-8/9	1	**1836970000**			
Socket							
	5-pole. PG 7	SAIB-5/7	1	**9457250000**	SAIBW-5/7	1	**9457260000**
	5-pole. PG 9	SAIB-5/9	1	**1807250000**	SAIBW-5/9	1	**1807330000**
	8-pole. PG 9	SAIB-8/9	1	**1836960000**			
Note		Other versions on request			Other versions on request		

Technical data

Type of connection	Screw connection	Screw connection
Housing main material	PA	PA
Contact tube diameter	M12	M12
Cable diameter	4...6 mm (PG7)/ 6...8 mm (PG9)	4...6 mm (PG7)/ 6...8 mm (PG9)
Wire cross-section, min. / max.	0.14...0.75 mm²	0.14...0.75 mm²
Rated current	4 A	4 A
Rated voltage	125 V (5-pole) / 60 V (8-pole)	125 V
Temperature range of housing	-25...+85 °C	-25...+85 °C
Protection degree	IP 67	IP 67
Contact surface	CuSnZn	CuSnZn
Note	Torque, see E.12	Torque, see E.12

Torque, see E.12

Dimensioned drawing

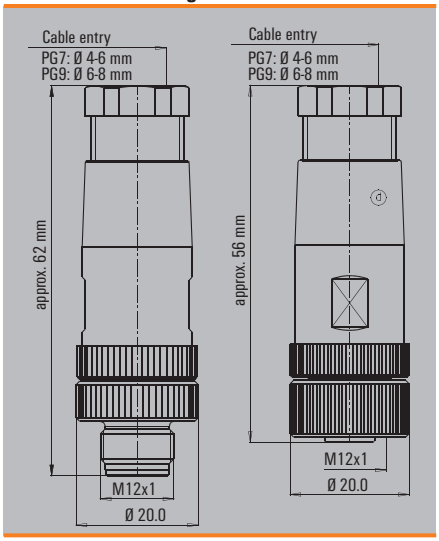

Dimensioned drawing

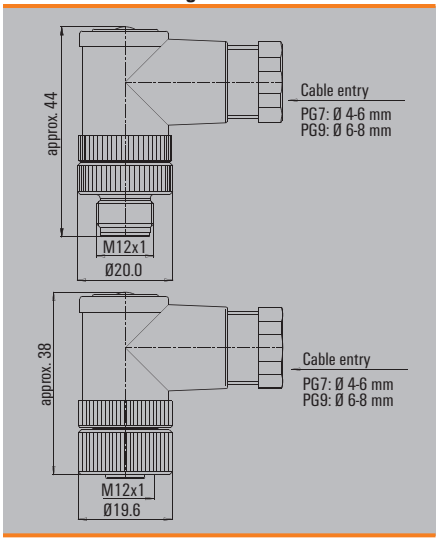

Screw connection M12, A-coded

SAIS / SAIB

Ordering data

Male	Type	Qty.	Order No.
4-pole. PG 11	SAIS-4/11-1.5	1	1353700000
5-pole. PG 11	SAIS-5/11-1.5	1	1353740000
Socket			
4-pole. PG 11	SAIB-4/11-1.5	1	1353730000
5-pole. PG 11	SAIB-5/11-1.5	1	1353750000
Note			

Technical data

Type of connection	Screw connection
Housing main material	PA
Contact tube diameter	M12
Cable diameter	8...10 mm (PG11)
Wire cross-section, min. / max.	0.14...1.5 mm²
Rated current	Contacts 1-4 8A, contact 5 2A
Rated voltage (acc. to VDE standard 0110 ISO group C)	250 V
Temperature range of housing	-25...+85 °C
Protection degree	IP 67
Contact surface	Gold-plated
Note	Torque, see E.12

Dimensioned drawing

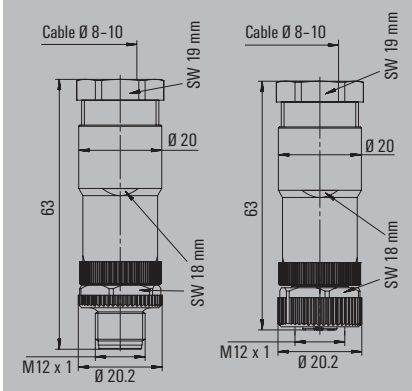

Torque, see E.12

Screw connection M12, A-coded

SAIS / SAIB

straight

SAISW / SAIBW

Angled

Ordering data

Male	Type	Qty.	Order No.	Type	Qty.	Order No.
4-pole. PG 7	SAIS-4/7-(KV)	1	**1921060000**	SAISW-4/7-(KV)	1	**1962620000**
5-pole. PG 7	SAIS-5/7-(KV)	1	**1921050000**	SAISW-5/7-(KV)	1	**1962610000**
Socket						
4-pole. PG 7	SAIB-4/7-(KV)	1	**1921080000**	SAIBW-4/7-(KV)	1	**1935610000**
5-pole. PG 7	SAIB-5/7-(KV)	1	**1921070000**	SAIBW-5/7-(KV)	1	**1962630000**
Note	Other versions on request			Other versions on request		

Technical data

Type of connection	Screw connection	Screw connection
Housing main material	PA	PA
Contact tube diameter	M12	M12
Cable diameter	4...6 mm (PG7)/ 6...8 mm (PG9)	4...6 mm (PG7)/ 6...8 mm (PG9)
Wire cross-section, min. / max.	0.14...0.75 mm²	0.14...0.75 mm²
Rated current	4 A	4 A
Rated voltage	250 V	125 V
Temperature range of housing	-25...+85 °C	-25...+85 °C
Protection degree	IP 67	IP 67
Contact surface	CuSnZn	CuSnZn
Note	KV = plastic cable glandTorque, see E.12	KV = plastic cable glandTorque, see E.12

KV = plastic cable glandTorque, see E.12

Dimensioned drawing

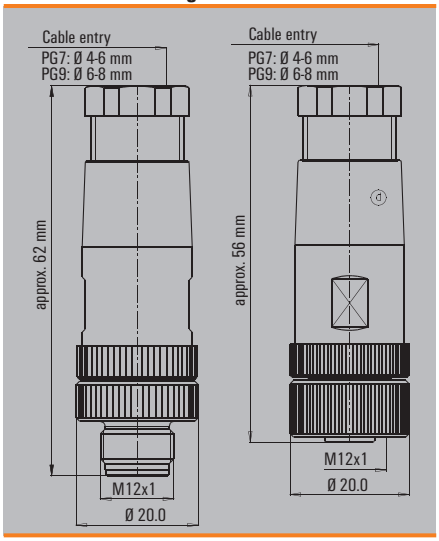

Dimensioned drawing

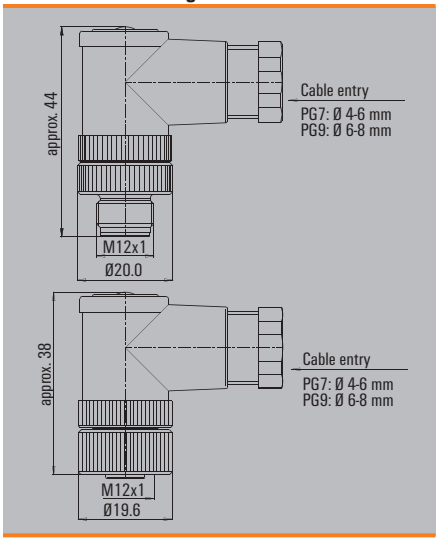

Solder connection M12, A-coded

SAIS / SAIB

Straight

SAIBW

Angled

Ordering data

Male			
	12-pole. PG 9		
Socket			
	12-pole. PG 9		
Note			

Type	Qty.	Order No.
SAIS-12/9-(TL)	1	**1924950000**
SAIB-12/9-(TL)	1	**1924960000**

Type	Qty.	Order No.
SAIBW-12/9-(TL)	1	**1925870000**

Technical data

Type of connection	Solder connection	Solder connection
Housing main material	PA	PA
Contact tube diameter	M12	M12
Cable diameter	6...8 mm (PG9)	6...8 mm (PG9)
Wire cross-section, min. / max.	0.25...0.25 mm²	0.25...0.25 mm²
Rated current	1 A	1 A
Rated voltage	30 V	30 V
Temperature range of housing	-25...+85 °C	-25...+85 °C
Protection degree	IP 67	IP 67
Contact surface	Gold-plated	Gold-plated
Note	Torque, see E.12	Torque, see E.12

Torque, see E.12

Dimensioned drawing

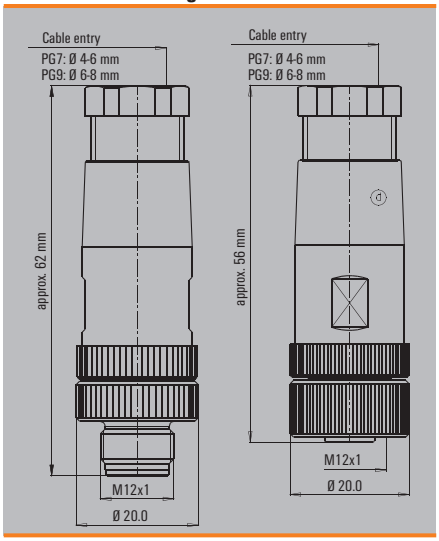

Dimensioned drawing

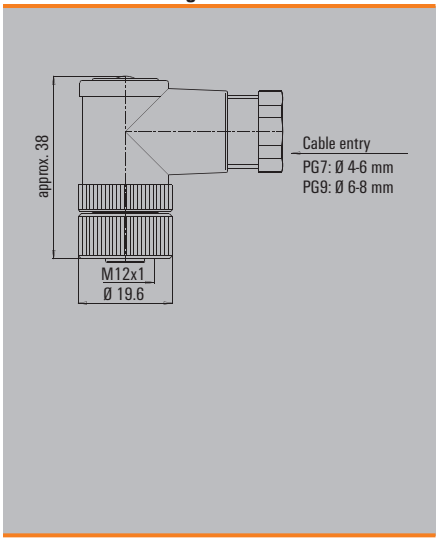

M12 tension-clamp connection, stainless steel, shielded
A-coded
B-coded

SAIS / SAIB VA

straight

Ordering data

Male		Type	QTY	Order No.
	5-pole. PG 9	SAIS 5/9-VA	1	1920700000
	5-pole. PG 9	SAIS 5/9-VA-B-COD	1	1920720000
Socket				
	5-pole. PG 9	SAIB 5/9-VA	1	1920710000
	5-pole. PG 9	SAIB 5/9-VA-B-COD	1	1920730000
Note				

Technical data

Type of connection	Tension clamp connection
Housing main material	1.4404/316L
Contact tube diameter	M12
Cable diameter	6...8 mm (PG9)
Wire cross-section, min. / max.	0.25...0.5 mm²
Rated current	4 A
Rated voltage	125 V
Temperature range of housing	-25...+85 °C
Protection degree	IP 69K
Contact surface	Gold-plated
Note	PB = PROFIBUS (B-COD)Torque, see E.12

Dimensioned drawing

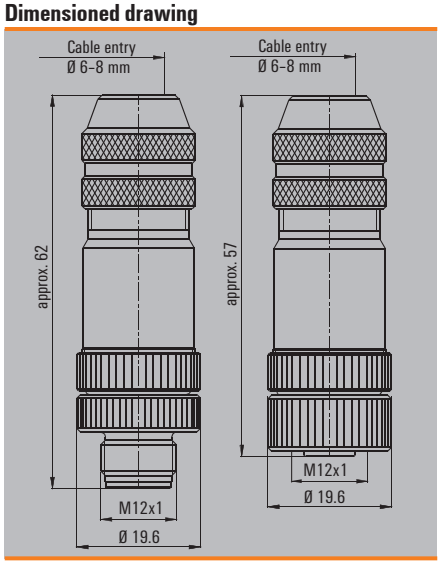

PB = PROFIBUS (B-COD)Torque, see E.12

SAI M12 plug, shielded
With shield connection

SAISM / SAISB 8/11

straight

Ordering data

Male		Type	Qty.	Order No.
	8-pole. PG 9	SAISM-8/9S-M12	1	1258940000
	8-pole. PG 11	SAISM-8/11S-M12	1	1118910000
Socket				
	8-pole. PG 9	SAIBM-8/9S-M12	1	1258930000
	8-pole. PG 11	SAIBM-8/11S-M12	1	1118920000
Note				

Technical data

Type of connection	Screw connection
Housing main material	CuZn
Contact tube diameter	M12
Cable diameter	6...8 mm (PG9) / 8...10 mm (PG11)
Wire cross-section, min. / max.	0.14...0.5 mm²
Rated current	2 A
Rated voltage	60 V
Temperature range of housing	-25...+85 °C
Protection degree	IP 67
Contact surface	Gold-plated
Note	Torque, see E.12

Dimensioned drawing

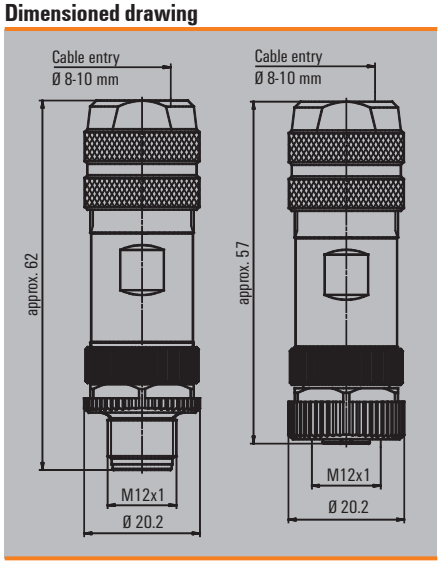

Torque, see E.12

M12 screw connection, metal (shielded)
A-coded

FBCon / SAIS

straight

SAISW / SAIBW

Angled

Ordering data

Male		Type	Qty.	Order No.	Type	Qty.	Order No.
	4-pole. PG 9	FBCon M12 4P M EMC	1	**9455640000**	SAISW-M-4/8 M12	1	**1803930000**
	5-pole. PG 9	SAIS-M-5/8S M12 5P A-COD	1	**1784740000**	SAISW-M-5/8 M12	1	**1803940000**
Socket							
	4-pole. PG 9	FBCon M12 4P FM EMC	1	**8426220000**	SAIBW-M-4/8 M12	1	**1803910000**
	5-pole. PG 7	SAIB-5/6S M12 5P A-COD	1	**1191020000**			
	5-pole. PG 9	SAIB-M-5/8S M12 5P A-COD	1	**1784750000**	SAIBW-M-5/8 M12	1	**1803920000**
Note		Other versions on request			Other versions on request		

Technical data

Type of connection	Screw connection	Screw connection
Housing main material	CuZn	CuZn
Contact tube diameter	M12	M12
Cable diameter	4...6 mm (PG7)/ 6...8 mm (PG9)	6...8 mm (PG9)
Wire cross-section, min. / max.	0.25...0.75 mm²	0.14...0.5 mm²
Rated current	4 A	4 A
Rated voltage	250 V (4-pole) / 125 V (5-pole)	250 V (4-pole) / 125 V (5-pole)
Temperature range of housing	-25...+85 °C	-25...+85 °C
Protection degree	IP 67	IP 67
Contact surface	Gold-plated	Gold-plated
Note	Torque, see E.12	Torque, see E.12

Torque, see E.12

Dimensioned drawing

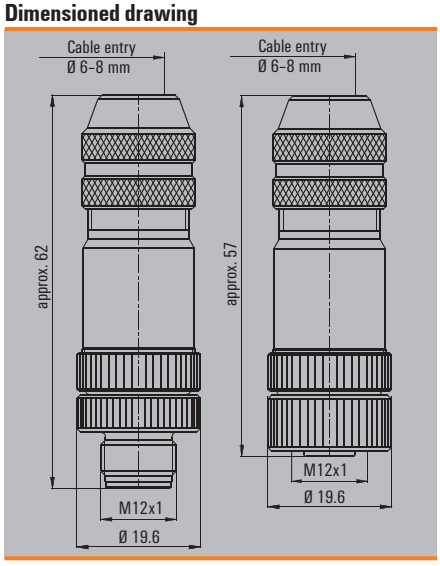

Dimensioned drawing

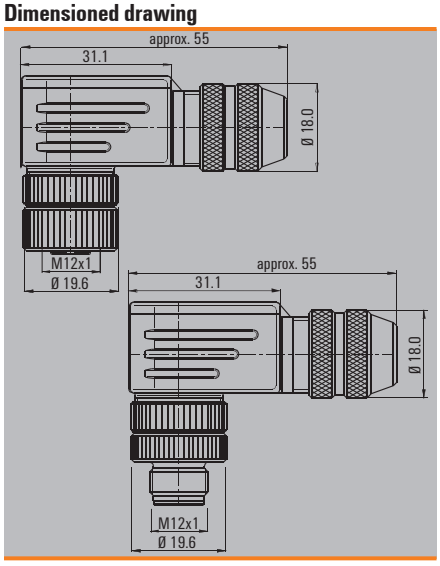

M12 screw connection, metal (shielded)
B-coded
D-coded

Industrial Ethernet

SAISM / SAIBM

straight

SAIS / SAIB

straight

Ordering data

Male		Type	Qty.	Order No.	Type	Qty.	Order No.
	3-pole. PG 9				SAIS-3-IDC-M12B-COD	1	1864730000
Straight	4-pole. PG 9	SAISM-4/8S-M12-4P D-COD	1	1892120000			
	5-pole. PG 9	SAISM 5/8S M12 5P B-COD	1	1784790000			
Socket							
	3-pole. PG 9				SAIB-3-IDC-M12B-COD	1	1864740000
Straight	4-pole. PG 9	SAIBM-4/8S-M12-4P D-COD	1	1892130000			
	5-pole. PG 9	SAIBM 5/8S M12 5P B-COD	1	1784780000			
Note							

Technical data

Type of connection	Screw connection	Insulation displacement connection
Housing main material	CuZn	CuZn
Contact tube diameter	M12	M12
Cable diameter	6...8 mm (PG9)	7...8.8 mm
Cross-section for connected wire, min./max.	0.14...0.75 mm²	0.34...0.75 mm²
Rated current	4 A	4 A
Rated voltage	250 V (4-pole) / 125 V / (5-pole)	32 V
Temperature range of housing	-25...+85 °C	-25...+85 °C
Protection degree	IP 67	IP 67
Contact surface	Gold-plated	tinned
Note	Torque, see E.12	PB = PROFIBUS (B-COD) IE = Industrial Ethernet (D-COD)

Torque, see E.12

Dimensioned drawing

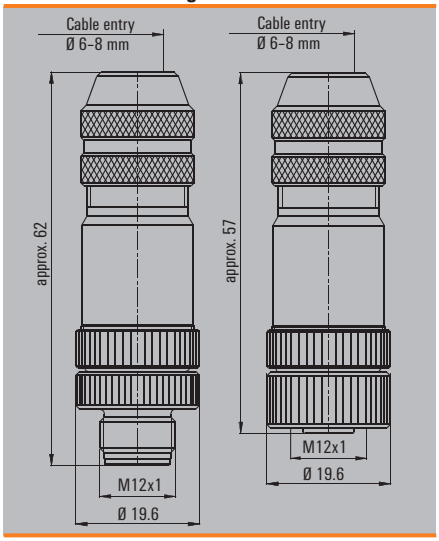

Dimensioned drawing

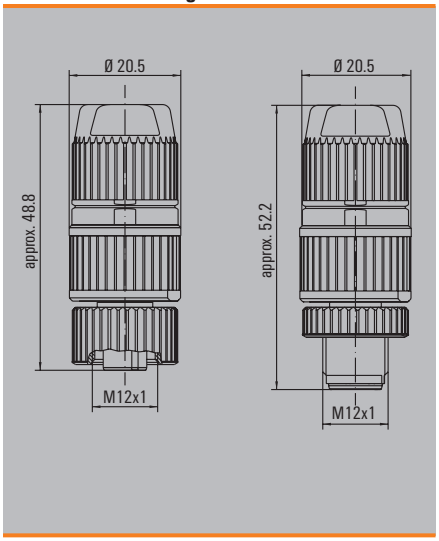

M12 screw connection, metal (shielded)
B-coded

SAISW / SAIBW

Angled

Ordering data

Male		Type	Qty.	Order No.
	5-pole. PG 9	SAISW-M-5/8 M12 B-COD	1	1944570000
Socket				
	5-pole. PG 9	SAIBW-M-5/8 M12 B-COD	1	1944580000
Note				

Technical data

Type of connection	Screw connection
Housing main material	CuZn
Contact tube diameter	M12
Cable diameter	6...8 mm (PG9)
Wire cross-section, min. / max.	0.14...0.75 mm²
Rated current	4 A
Rated voltage	125 V
Temperature range of housing	-25...+85 °C
Protection degree	IP 67
Contact surface	Gold-plated
Note	Torque, see E.12

Dimensioned drawing

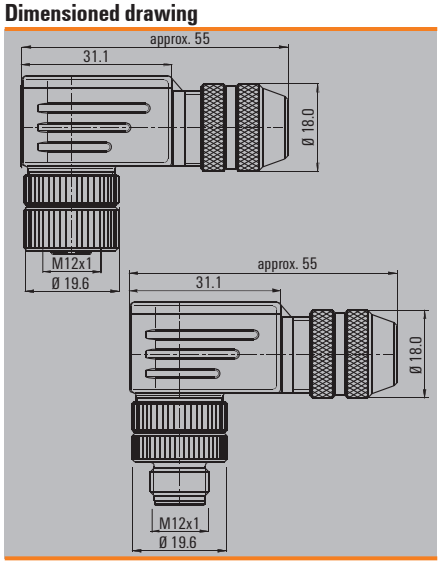

Torque, see E.12

Tension-clamp connection, metal (shielded) D-coded

Industrial Ethernet

SAISM / SAIBM

straight

SAISW / SAIBW

angled

Ordering data

Male				
Straight	4-pole. PG 9			
Socket				
Straight	4-pole. PG 9			
Note				

Type	Qty.	Order No.
SAIBM-4/8S-M12 4P D-ZF	1	**1892130001**
SAISM-4/8S-M12 4P D-ZF	1	**1892120001**

Type	Qty.	Order No.
SAISW-4/8S-M12 4P D-ZF	1	**1803930001**
SAIBW-4/8S-M12 4P D-ZF	1	**1139330000**

Technical data

Type of connection	Tension clamp connection	Tension clamp connection
Housing main material	CuZn	CuZn
Contact tube diameter	M12	M12
Cable diameter	6...8 mm (PG9)	6...8 mm (PG9)
Wire cross-section, min. / max.	0.25...0.5 mm²	0.25...0.5 mm²
Rated current	4 A	4 A
Rated voltage	250 V	250 V
Temperature range of housing	-25...+85 °C	-25...+85 °C
Protection degree	IP 67	IP 67
Contact surface	Gold-plated	Gold-plated
Note	Torque, see E.12	Torque, see E.12

Torque, see E.12

Dimensioned drawing

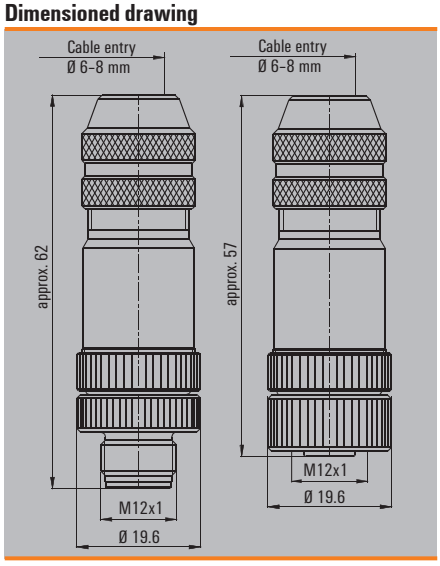

Dimensioned drawing

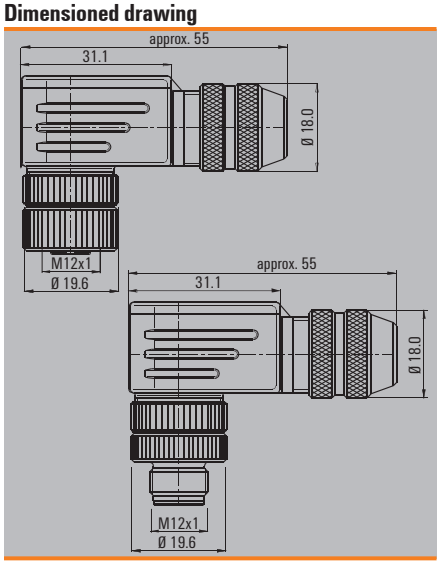

Tension clamp connection M12
A-coded

SAIS-ZF

straight

Ordering data

Male		Type	Qty.	Order No.
	5-pole. PG 7	SAIS-5/7-ZF	1	1906390000
Socket				
	5-pole. PG 7	SAIB-5/7-ZF	1	1924970000
Note				

Technical data

Type of connection	Tension clamp connection
Housing main material	PA
Contact tube diameter	M12
Cable diameter	4...6 mm
Wire cross-section, min. / max.	0.25...0.5 mm²
Rated current	4 A
Rated voltage	125 V
Temperature range of housing	-25...+85 °C
Protection degree	IP 67
Contact surface	Gold-plated
Note	Torque, see E.12

Dimensioned drawing

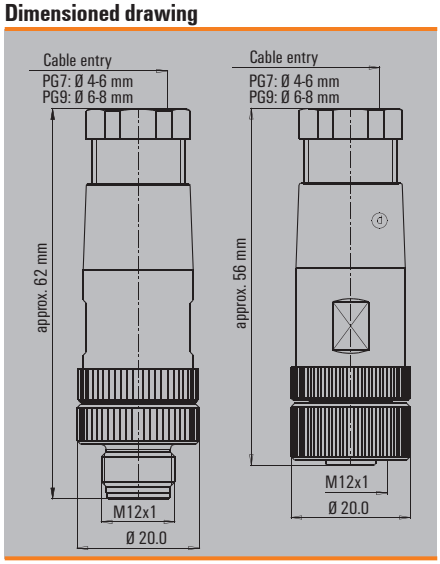

Torque, see E.12

M8 screw connection

SAIS / SAIB

straight

Ordering data

Male		Type	Qty.	Order No.
	3-pole	SAIS-M8-3P	1	1803860000
	4-pole	SAIS-M8-4P	1	1803850000
Socket				
	3-pole	SAIB-M8-3P	1	1803870000
	4-pole	SAIB-M8-4P	1	1803880000
Note		Other versions on request		

Technical data

Type of connection	Screw connection
Housing main material	PA
Contact tube diameter	M8
Cable diameter	3.5...5 mm
Wire cross-section, min. / max.	0.14...0.5 mm²
Rated current	4 A
Rated voltage	30 V
Temperature range of housing	-25...+85 °C
Protection degree	IP 67
Contact surface	Gold-plated
Note	Torque, see E.12

Dimensioned drawing

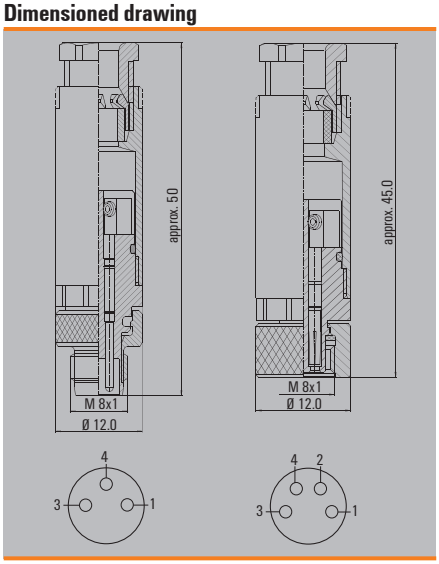

Torque, see E.12

Solder connection M8, shielded
screw connection M8, shielded

SAISM / SAIBM

straight

SAISM / SAIBM

straight

Ordering data

Male	Type	Qty.	Order No.	Type	Qty.	Order No.
3-pole	SAISM-M8-3P(TL)	1	1921030000	SAISM-M8-3P-(IF)	1	1010060000
4-pole	SAISM-M8-4P(TL)	1	1921040000	SAISM-M8-4P-(IF)	1	1010070000
Socket						
3-pole	SAIBM-M8-3P(TL)	1	1921010000	SAIBM-M8-3P-(IF)	1	1010080000
4-pole	SAIBM-M8-4P(TL)	1	1921020000	SAIBM-M8-4P-(IF)	1	1010090000
Note						

Technical data

Type of connection	Solder connection	Screw connection
Housing main material	CuZn	CuZn
Contact tube diameter	M8	M8
Cable diameter	3.5...5.5 mm	3.5...5 mm
Wire cross-section, min. / max.	0.25...0.25 mm²	0.14...0.5 mm²
Rated current	4 A	4 A
Rated voltage	30 V	30 V
Temperature range of housing	-25...+85 °C	-25...+85 °C
Protection degree	IP 67	IP 67
Contact surface	Gold-plated	Gold-plated
Note	Torque, see E.12	IF = Iris-type springTorque, see E.12

Torque, see E.12

Dimensioned drawing

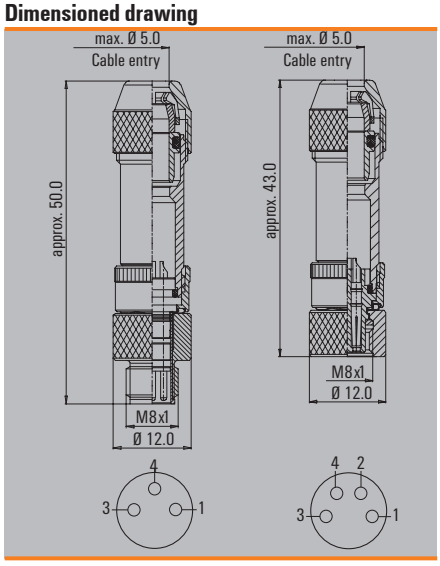

Dimensioned drawing

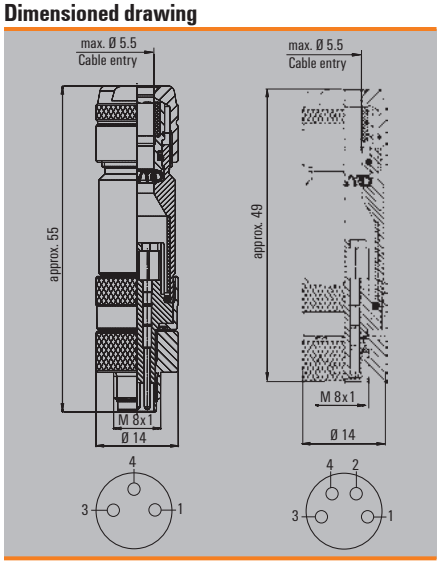

Solder connection M8

SAISW / SAIBW

Angled

Ordering data

Male		Type	Qty.	Order No.
	3-pole	SAISW-M8-3P(TL)	1	1920990000
	4-pole	SAISW-M8-4P(TL)	1	1921000000
Socket				
	3-pole	SAIBW-M8-3P(TL)	1	1920970000
	4-pole	SAIBW-M8-4P(TL)	1	1920980000
Note				

Technical data

Type of connection	Solder connection
Housing main material	CuZn
Contact tube diameter	M8
Cable diameter	3.5...5.5 mm
Wire cross-section, min. / max.	0.25...0.25 mm²
Rated current	4 A
Rated voltage	30 V
Temperature range of housing	-25...+85 °C
Protection degree	IP 67
Contact surface	Gold-plated
Note	Torque, see E.12

Dimensioned drawing

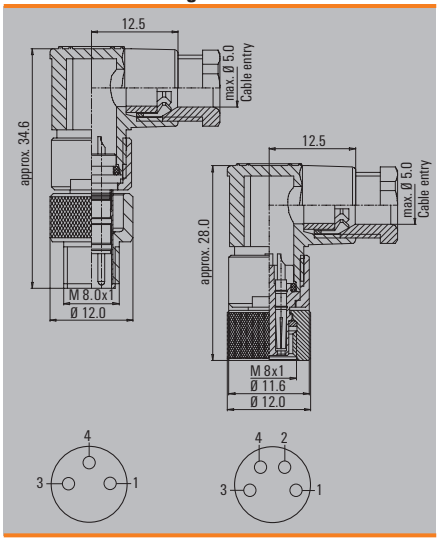

Torque, see E.12

M8 and M12 insulation displacement connection (IDC)

M8

M12

The assembly of round plugs is very time consuming.
The cable has to be stripped and possibly, also fitted with a wire end ferrule.

Weidmüllers IDC plug in connector systems offers a quick fit connection system that saves both time and money.

The IDC quick fit, quick connection system is available for M12 and M8 connectors.

Screwty®

This is the perfect tool for all common cable glands on sensor and actuator cables.

The Screwty® fits M12 and M8 round plugs. Both types can be used for plugs and sockets on custom cables.

The handle of every Screwty® has a conventional 1/4 inch fitting and can be used for all sizes. Simply turn the tool to tighten or release a round plug.

The Screwty® is also available with a torque fitting.
This adjustable attachment can be used for all sizes.

The torque can be infinitely adjusted between 0.5 and 1.7 Nm.

Insulation-displacement connection M12 A-coded

SAIS IDC / SAIB IDC

straight

SAISW IDC / SAIBW IDC

Angled

Ordering data

Male			
4-pole			
Socket			
4-pole			
Note			

Type	Qty.	Order No.
SAIS-4-IDC M12 small	1	**1781550001**
SAIB-4-IDC-M12 small	1	**1781540001**
Other versions on request		

Type	Qty.	Order No.
SAISW-4-IDC M12	1	**1812870000**
SAIBW-4-IDC M12	1	**1812890000**
Other versions on request		

Technical data

Type of connection	Insulation displacement connection	Insulation displacement connection
Housing main material	CuZn	CuZn
Contact tube diameter	M12	M12
Cable diameter	4...5.1 mm	4...5.1 mm
Wire cross-section, min. / max.	0.14...0.34 mm²	0.25...0.5 mm²
Rated current	4 A	4 A
Rated voltage	32 V	32 V
Temperature range of housing	-25...+85 °C	-25...+85 °C
Protection degree	IP 67	IP 67
Contact surface	tinned	tinned
Note	Torque, see E.12	Torque, see E.12

Torque, see E.12

Dimensioned drawing

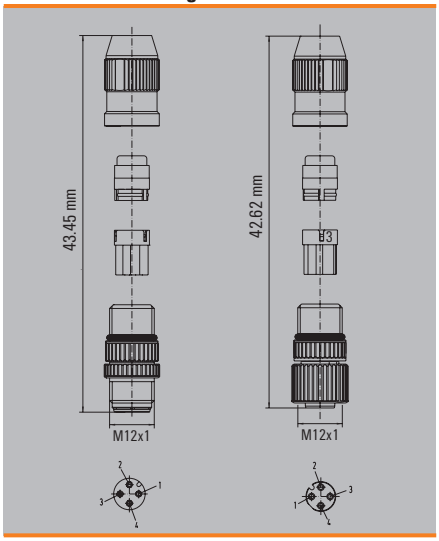

Dimensioned drawing

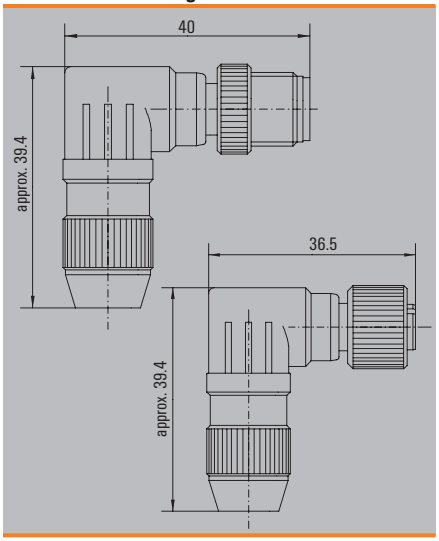

Insulation-displacement connection M12 (0.75) A-coded

SAIS IDC / SAIB IDC (0.75)

straight

Ordering data

Type	Qty.	Order No.
Male		
3-pole	SAIS-3-IDC (0,75) M12	1	**1852720000**
4-pole	SAIS-4-IDC (0,75) M12	1	**1852740000**
Socket		
3-pole	SAIB-3-IDC (0,75) M12	1	**1852730000**
4-pole	SAIB-4-IDC (0,75) M12	1	**1852750000**
Note	Other versions on request		

Technical data

Type of connection	Insulation displacement connection
Housing main material	CuZn
Contact tube diameter	M12
Cable diameter	5.5...8 mm
Wire cross-section, min. / max.	0.34...0.75 mm²
Rated current	6 A
Rated voltage	50 V
Temperature range of housing	-25...+85 °C
Protection degree	IP 67
Contact surface	tinned
Note	Torque, see E.12

Dimensioned drawing

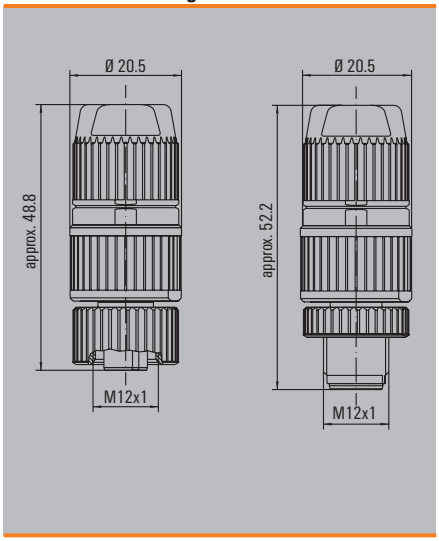

Torque, see E.12

Insulation-displacement connection M8

SAIS IDC / SAIB IDC

straight

Ordering data

Male		Type	Qty.	Order No.
	3-pole	SAIS-3-IDC M8 small	1	1784040001
	4-pole	SAIS-4-IDC M8 small	1	1784060001
Socket				
	3-pole	SAIB-3-IDC-M8 small	1	1784030001
	4-pole	SAIB-4-IDC-M8 small	1	1784050001
Note		Other versions on request		

Technical data

Type of connection	Insulation displacement connection
Housing main material	CuZn
Contact tube diameter	M8
Cable diameter	3.2...5.4 mm
Wire cross-section, min. / max.	0.14...0.34 mm²
Rated current	4 A
Rated voltage	32 V
Temperature range of housing	-25...+85 °C
Protection degree	IP 67
Contact surface	tinned
Note	Torque, see E.12

Dimensioned drawing

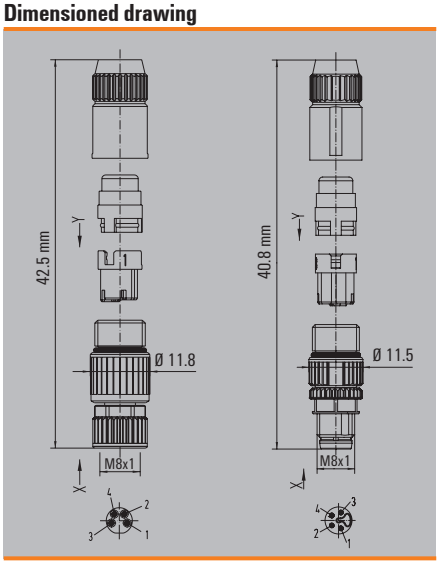

Torque, see E.12

M16 plug-in connector
Solder connection

SAIS

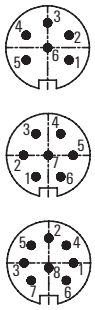

Male

Ordering data

Male		Type	Qty.	Order No.
	4-pole. PG 9	SAIS-M16-4/9	1	1117970000
	5-pole. PG 9	SAIS-M16-5/9	1	1117990000
	8-pole. PG 9	SAIS-M16-8/9	1	1304430000
	2-pole. PG 9	SAIS-M16-2/9	1	1321700000
	6-pole. PG 9	SAIS-M16-6/9	1	1304390000
	7-pole. PG 9	SAIS-M16-7/9	1	1118010000
Note				

Technical data

Type of connection	Solder connection
Housing main material	PA
Contact tube diameter	M12
Wire cross-section, min. / max.	0.14...0.75 mm²
Rated current	7 A
Rated voltage	250 V
Temperature range of housing	-40 ... +85 ° C
Protection degree	IP 40
Contact surface	Ag (silver)
Note	Torque, see E.12

Dimensioned drawing

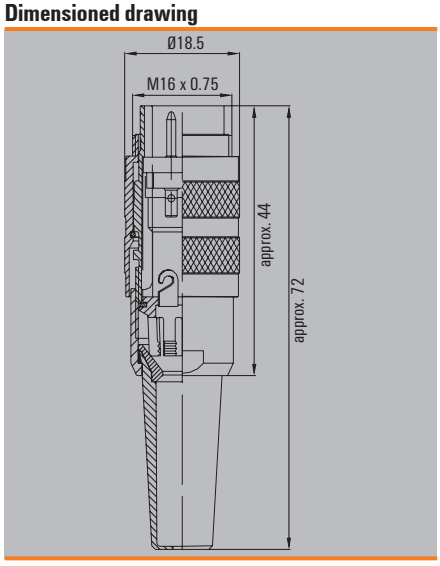

Torque, see E.12

Y distributor

M12/M12

Mounting screw M3

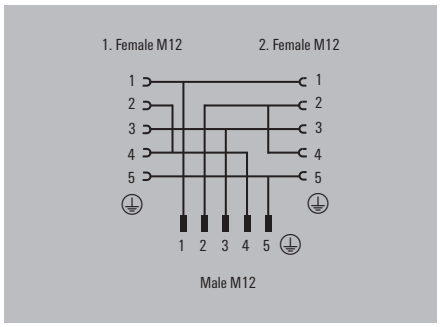

Ordering data

Type	Qty.	Order No.
Distribution, pin 2 + 4 bridged SAI-Y-5S B2-4 M12/M12	1	1783410000

M12/M12

Mounting screw M3

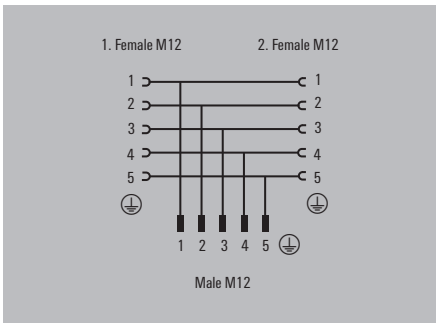

Ordering data

Type	Qty.	Order No.
Parallel distribution SAI-Y-5S PARA M12/M12	1	1783430000

M12/M12

Mounting screw M3

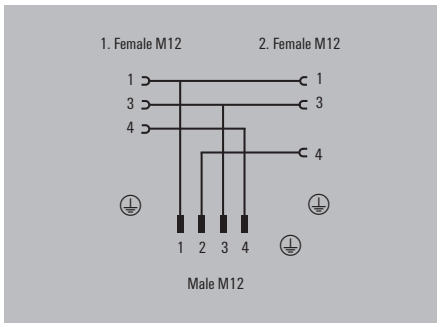

Ordering data

Type	Qty.	Order No.
SAI-Y-4S-M12/M12	1	1060730000

M12/M12

Mounting screw M3

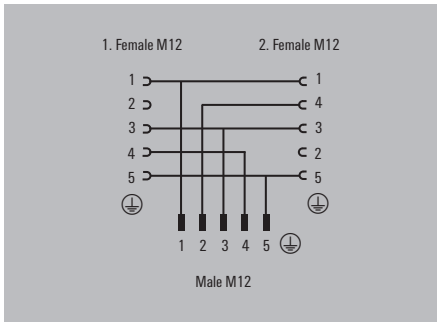

Ordering data

Type	Qty.	Order No.
Individual distribution SAI-Y-5S-M12/M12	1	1826880000

M12/M8

Mounting screw M3

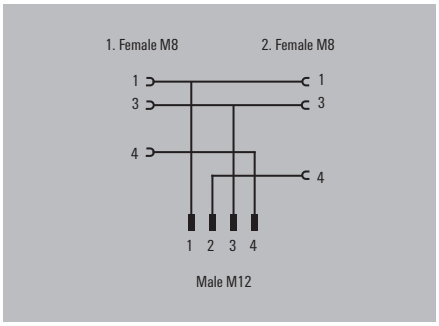

Ordering data

Type	Qty.	Order No.
Individual distribution SAI-Y-4-4/2-4 M12/M8	1	1783420000

M8/M8

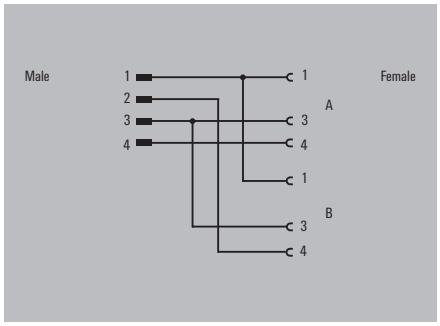

Ordering data

Type	Qty.	Order No.
Individual distribution SAI-Y-4S M8/M8	1	1805660000

T distributor

M12/M12

CANopen

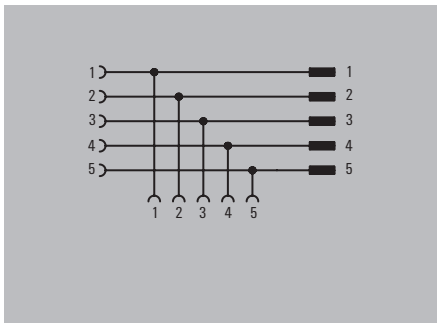

Ordering data

Type	Qty.	Order No.
SAI-T-5S-PARA	1	1009370000

M12/M12

PROFIBUS

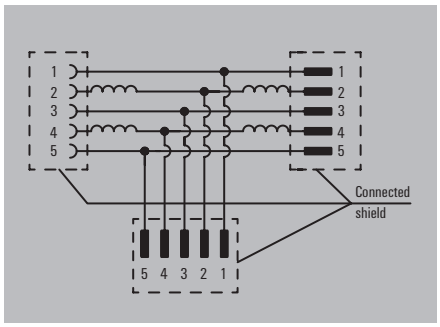

Ordering data

Type	Qty.	Order No.
SAI-T-5-M12/M12 B-COD	1	1057940000

Twin plugs and wall bushings

Miniature twin plugs

Purpose-built machines often require individual cable lengths for the initiator cables. In some cases, two cables have to be of different lengths even when going to the same connector position.

To resolve this difficulty, we offer male and female connectors with two cable outlets that you can fabricate as you wish. The miniature twin plug is available with a 90° outlet and a straight outgoing cable direction. The 90° version can be twisted as you wish in steps of 90°.

Ordering data

Type	Qty.	Order No.
SAIS-ZW-5 (straight)	1	9457540000
SAIS-ZWW (90°)	1	1837560000

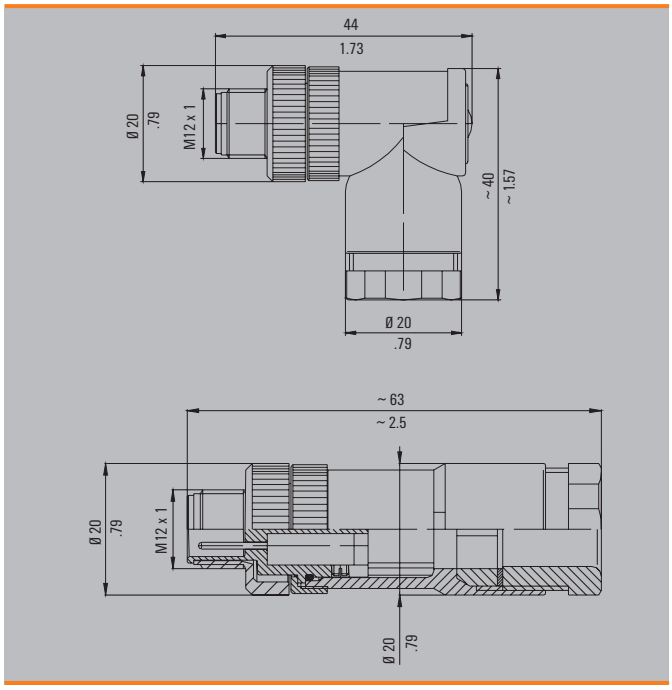

Wall bushing

In general machine building, it is common to have cables passing through the walls of control cabinets. To meet the need for a wall penetration with M12 plug in connectors, the M12 bushing is included in the range. The wall bushing is available as 5 pole.

In addition, a bushing for PROFIBUS plug in connectors (PB) is available

Ordering data

Type	Length	Coding	Qty.	Order No.
SAI-WDF-5P M12 60 mm	60 mm	A	1	1819450000
SAI-WDF-5PB M12 60 mm	60 mm	B	1	1820690000

M12/M12

Mounting screw M4

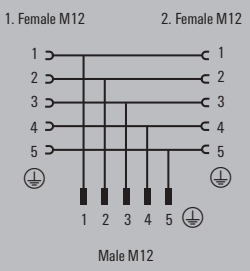

Ordering data

Type	Qty.	Order No.
SAI-Y-5S M12/M12 2 BO	1	1881710000

Protective caps for SAI distributors

Protects against external effects when the I/O is not in use.

Protective cap M5

For SAI M5 distributors.

Ordering data

Type	Qty.	Order No.
SAI-SK-M5	50	1855310000

Protective cap M8

For SAI M8 distributors.

Ordering data

Type	Qty.	Order No.
SAI-SK-M8	50	1802760000

Protective cap M12

For SAI M12 distributors.

Ordering data

Type	Qty.	Order No.
SAI-SK-M12	30	9456050000

Protective cap M12

For SAI metal distributors.

Ordering data

Type	Qty.	Order No.
SAI-SK-M12-M	30	1802750000

Protective cap M12 IDC

For SAI distributors with IDC connection.

Ordering data

Type	Qty.	Order No.
SAI-SK IDC	10	1794850000

Protective cap M12 Universal

Suitable for SAI M12 - universal distributor and appropriate M12 cables.

Ordering data

Type	Qty.	Order No.
SAI-SK-M12-UNI	20	2330260000
Hand operation possible. Screwty® compatible.		

Protective cap M12 connector

Protection from external influences. For open plugs.
For attaching to cable.

Ordering data

Type	Qty.	Order No.
SAI-SK-M12 BU	1	8425960000

Protective cap M12 connector

Protects against external effects. For open plugs or sockets.

Ordering data

Type	Qty.	Order No.
Protective cap connector (yellow)	50	1781520000

M12, M8, M5 built-in plugs

For connection of cables to sensors and actuators, different built-in connectors are needed at the device end.

M12

M12 plug in connectors are available with the following numbers of poles: 4 to 5-pole and 8-pole. Built-in connectors for M12 connections are all A-coded and have individual leads of 0.5 m. Fixing of the FP version is achieved with the supplied locknut. Also available are built-in connectors that can be screwed in from the front.

M8

M8 connector requirements are covered by the 3 and 4 pole built-in male and female connectors. Like the M12 built-in connectors, these have a locknut for fastening into a housing wall. These connectors have 0.5m long leads attached.

M5

Weidmüller also offers corresponding built-in connectors for the smallest of the plug in connectors, the M5. The M5 built-in connector is available in 3 and 4 pole versions. This plug in connector also has a locknut. The individual lead length with M5 built-in connectors is 0.2 m.

The cross sections of the individually attached leads are available from the technical data of the various families of plug in connectors.

M12 (M16)

SAIE-M12

M12 (M16)

SAIE-M12 FP

Ordering data

Male	Type	Qty.	Order No.	Type	Qty.	Order No.
4-pole	SAIE-M12S-4-0.5U-M16	1	**1861090000**	SAIE-M12S-4-0.5U-FP-M16	1	**1861160000**
5-pole	SAIE-M12S-5-0.5U-M16	1	**1861230000**	SAIE-M12S-5-0.5U-FP-M16	1	**1861170000**
8-pole	SAIE-M12S-8-0.5U-M16	1	**1861110000**	SAIE-M12S-8-0.5U-FP-M16	1	**1861180000**
12-pole				SAIE-M12S-12-0.5U-FP-M16	1	**1283550000**
Socket						
4-pole	SAIE-M12B-4-0.5U-M16	1	**1861120000**	SAIE-M12B-4-0.5U-FP-M16	1	**1861190000**
5-pole	SAIE-M12B-5-0.5U-M16	1	**1836910000**	SAIE-M12B-5-0.5U-FP-M16	1	**1856110000**
8-pole	SAIE-M12B-8-0,5U-M16	1	**1861140000**	SAIE-M12B-8-0.5U-FP-M16	1	**1861210000**
12-pole				SAIE-M12B-12-0.5U-FP-M16	1	**1289140000**
Note	Other versions on request			FP with M16 cable gland FP = can be freely positioned		

Technical data

Cable gland	M16	M16
Housing main material	CuZn, nickel-plated	CuZn, nickel-plated
Contact tube diameter	M12	M12
Core cross-section	0.34 mm²	0.25 mm²
Rated current	4 A	2 A
Rated voltage (acc. to VDE standard 0110 ISO group C)	250 V (4-pole) / 60 V (5-pole) / 30 V (8-pole)	250 V (4-pole)/ 60 V (5-pole)/ 30 V (8 and 12-pole)
Temperature range of housing	-30...+90 °C	-30...+90 °C
Protection degree	IP 67	IP 67
Contact surface	Gold-plated	Gold-plated
Note		

Dimensioned drawing

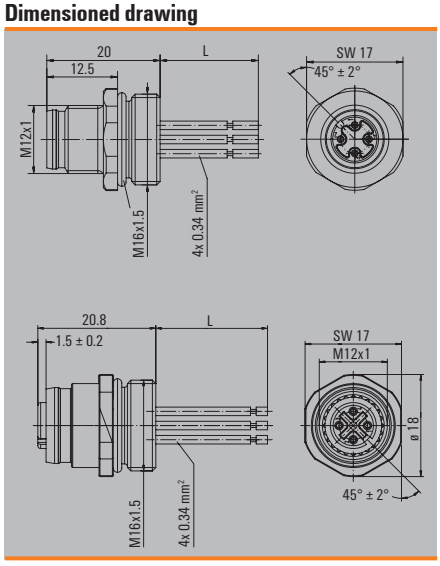

Dimensioned drawing

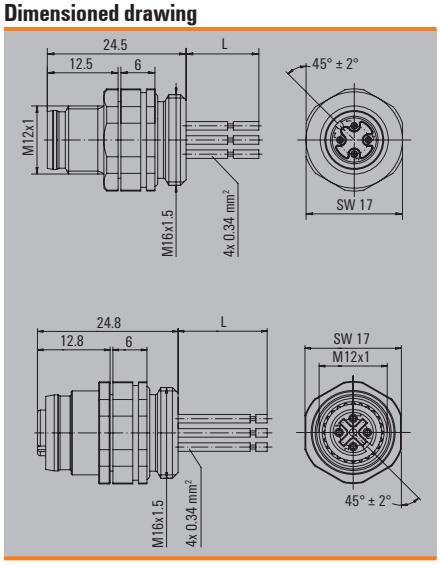

M12

Ordering data

Male		Type	Qty.	Order No.
	4-pole	SAIE-M12S-4-0.5U P9 1.5	1	1353770000
Socket				
	5-pole	SAIE-M12B-4-0.5U P9 1.5	1	1353780000
Note				

Technical data

Cable gland	PG 9
Housing main material	CuZn, nickel-plated
Contact tube diameter	M12
Core cross-section	1.5 mm²
Rated current	A
Rated voltage (acc. to VDE standard 0110 ISO group C)	60 V
Temperature range of housing	-30...+90 °C
Protection degree	IP 67
Contact surface	Gold-plated
Note	

Dimensioned drawing

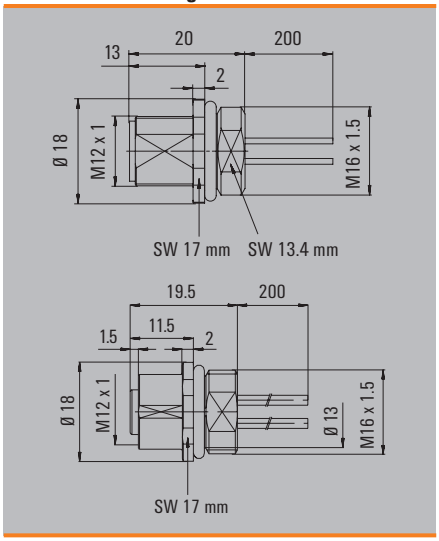

M12 (PG 9)

SAIE-M12 PG

M8

SAIE-M8 FP

Ordering data

Male	Type	Qty.	Order No.	Type	Qty.	Order No.
3-pole				SAIE-M8R-3-0.5U-FP-M8	1	1861280000
4-pole	SAIE-M12S-4-0.5U-PG9	1	1861220000	SAIE-M8R-4-0.5U-FP-M8	1	1861290000
5-pole	SAIE-M12S-5-0.5U-PG9	1	1856120000			
8-pole	SAIE-M12S-8-0.5U-PG9	1	1861240000			
Socket						
4-pole	SAIE-M12B-4-0.5U-PG9	1	1861250000			
5-pole	SAIE-M12B-5-0.5U-PG9	1	1814890000			
8-pole	SAIE-M12B-8-0.5U-PG9	1	1861270000			
Note	with PG cable gland			Fixing nut included FP = can be positioned as required		

Technical data

Cable gland	PG 9	M8
Housing main material	CuZn, nickel-plated	CuZn, nickel-plated
Contact tube diameter	M12	M8
Core cross-section	0.25 mm²	0.25 mm²
Rated current	A	4 A
Rated voltage (acc. to VDE standard 0110 ISO group C)	250 V (4-pole) / 125 V (5-pole) / 60 V (8-pole)	60 V (3-pole) / 30 V (4-pole)
Temperature range of housing	-30...+90 °C	-30...+90 °C
Protection degree	IP 67	IP 67
Contact surface	Gold-plated	Gold-plated
Approvals	cURus; GOSTME25	cURus; GOSTME25
Note		

Dimensioned drawing

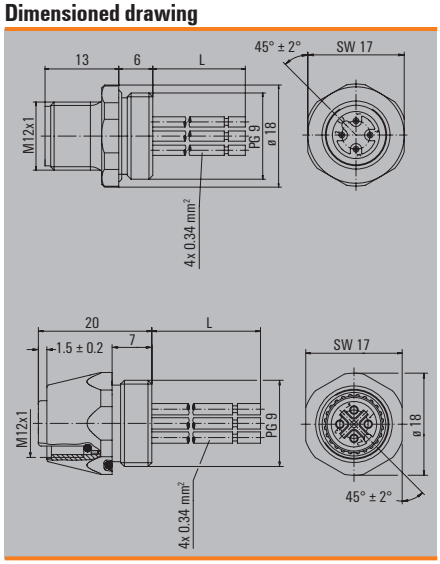

Dimensioned drawing

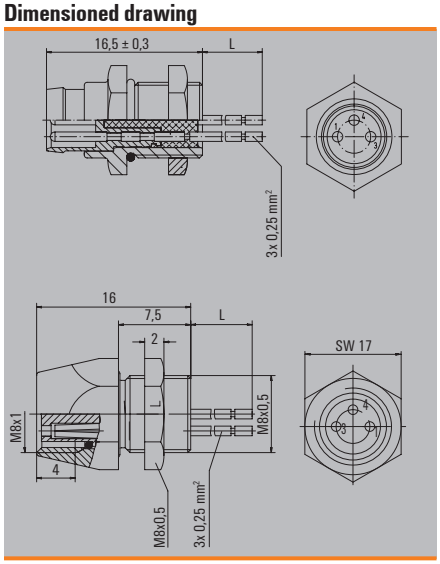

M8

SAIE-M8 FP

M5

SAIE-M5

Ordering data

Male	Type	Qty.	Order No.
3-pole	SAIE-M8S-3-0.5U-FP-M8	1	1078730000
4-pole	SAIE-M8S-4-0.5U-FP-M8	1	1078720000
Socket			
3-pole	SAIE-M8B-3-0.5U-FP-M8	1	1856130000
4-pole	SAIE-M8B-4-0.5U-FP-M8	1	1856140000
Note	Fixing nut included FP = can be positioned as required		

Type	Qty.	Order No.
SAIE-M5S-3-0.2U	1	1873050000
SAIE-M5S-4-0.2U	1	1873030000
SAIE-M5B-3-0.2U	1	1873060000
SAIE-M5B-4-0.2U	1	1873040000
Fixing nut included		

Technical data

Cable gland	M8	M5
Housing main material	CuZn, nickel-plated	CuZn, nickel-plated
Contact tube diameter	M8	M5
Core cross-section	0.25 mm²	0.14 mm²
Rated current	4 A	1 A
Rated voltage (acc. to VDE standard 0110 ISO group C)	60 V (3-pole) / 30 V (4-pole)	60 V
Temperature range of housing	-30...+90 °C	-25...+80 °C
Protection degree	IP 67	IP 67
Contact surface	Gold-plated	Gold-plated
Approvals		
Note		

Dimensioned drawing

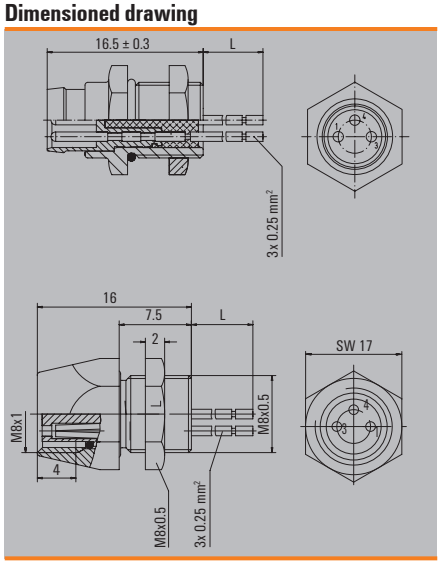

Dimensioned drawing

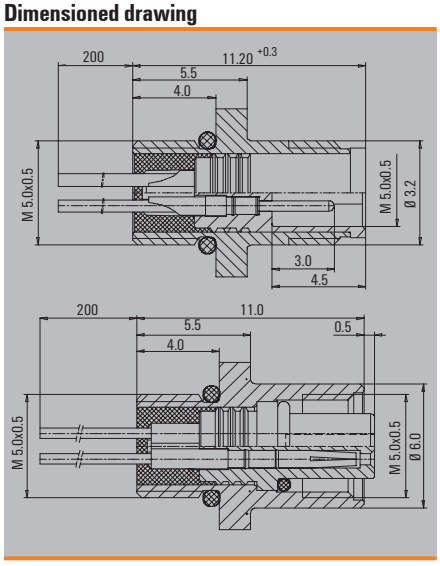

M12

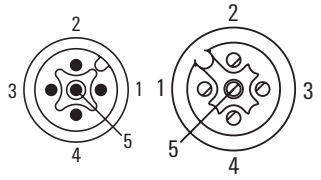

Male Female

Ordering data

Male		Type	QTY	Order No.
	5-pole	SAIE-M12S-5-LP	500	1312980000
Socket				
	5-pole	SAIE-M12B-5-LP	500	1312970000
Note				

Technical data

Housing main material	Zinc diecast
Contact tube diameter	M12
Rated current	4 A
Rated voltage	30 V
Temperature range of housing	-20 ... +90 °C
Protection degree	IP 68
Contact surface	Gold-plated
Approvals	
Note	

Dimensioned drawing

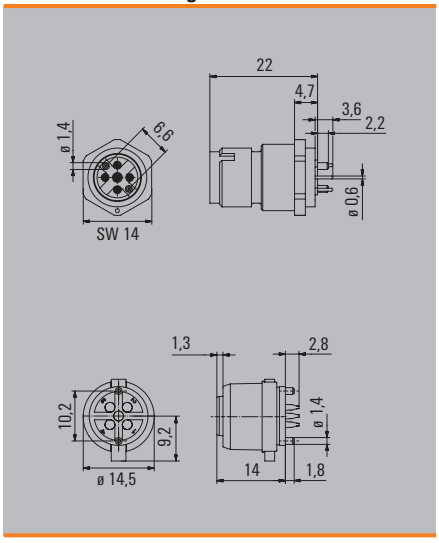

M12 built-in connector, mounts behind wall
A-coded
Shielded

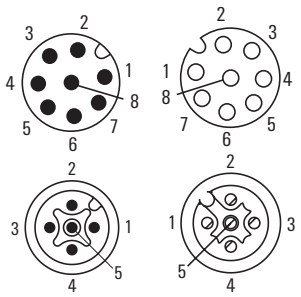

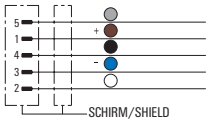

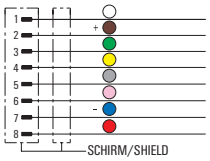

Ordering data

Male, straight		5-pole Type	5-pole Order No.	8-pole Type	8-pole Order No.
PUR	0.5 m	SAIE-M12S-5S0.5U HW	1341230050	SAIE-M12S-8S0.5U HW	1341240050
PUR	2.0 m	SAIE-M12S-5S2.0U HW	1341230200	SAIE-M12S-8S2.0U HW	1341240200
Female, straight					
PUR	0.5 m	SAIE-M12B-5S0.5U HW	1222270050	SAIE-M12B-8S0.5U HW	1223650050
PUR	2.0 m	SAIE-M12B-5S2.0U HW	1222270000	SAIE-M12B-8S2.0U HW	1223650000
Note					

Standard cable lengths

All cables listed in the ordering data have a length of 1.5 metres. The last four ordering digits must be changed when ordering other standard cable lengths.	1.5 m	xxxxxx0150
	3.0 m	xxxxxx0300
	5.0 m	xxxxxx0500
	10.0 m	xxxxxx1000

Technical data

Cable gland	PG 9
Housing main material	Zinc diecast, nickel-plated
Contact tube diameter	M12
Core cross-section	0.25 mm²
Rated current	4 A
Rated voltage	125 V
Temperature range of housing	-5 ... +70 °C
Protection degree	IP 68
Contact surface	Gold-plated

Dimensioned drawing

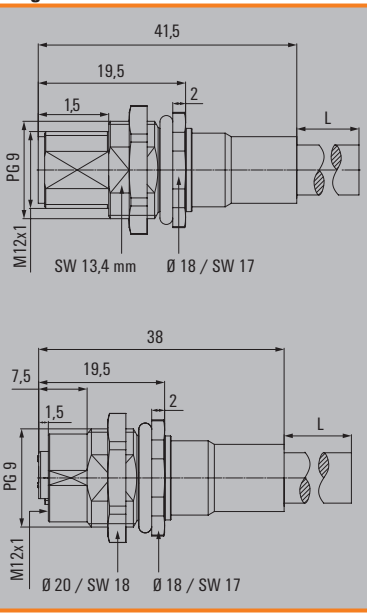

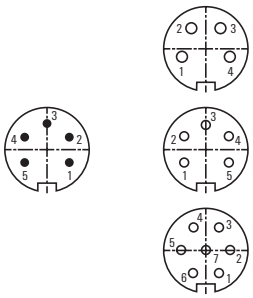

SAIE

SAIE

Ordering data

Male			
	5-pole. PG 9		
Socket			
	4-pole		
	5-pole		
	7-pole		
Note			

Type	QTY	Order No.
SAIE-M16S-5-HWM	1	**1269790000**

Type	QTY	Order No.
SAIE-M16B-4-L	20	**1326720000**
SAIE-M16B-5-L	1	**1326730000**
SAIE-M16B-7-L	1	**1326740000**

Technical data

Type of connection	Solder connection	Solder connection
Housing main material	Zinc diecast, nickel-plated	Zinc diecast, nickel-plated
Contact tube diameter	M16	M16
Wire cross-section, min. / max.	0.14...0.75 mm²	0.14...0.75 mm²
Rated current	6 A	5 A
Rated voltage	250 V	125 V
Temperature range of housing	-30...+90 °C	-40 ... +85 ° C
Protection degree	IP 67	IP 40
Contact surface	Ag (silver)	Ag (silver)
Note		

Dimensioned drawing

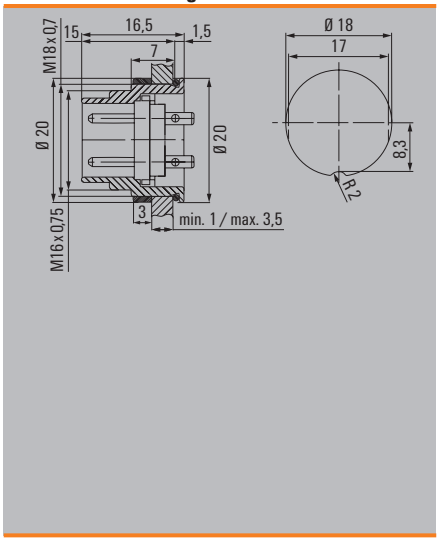

Dimensioned drawing

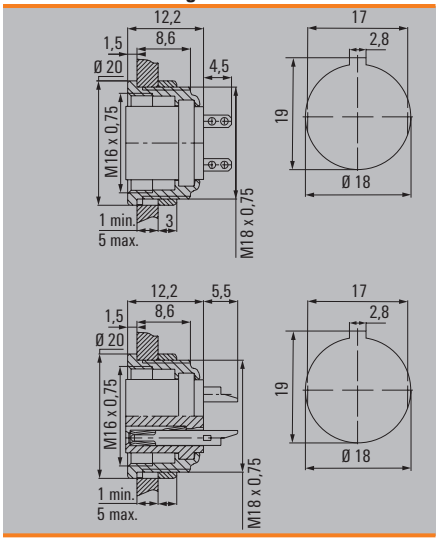

Introduction

Valve plugs for custom cables are often incorporated when designing special machines. Such plugs are used to connect solenoid valves.

Weidmüller valve plugs are available in all customary forms.
The range includes form A, form B and form C to industry standards and to DIN.

These valve plugs are available without circuitry in 3-pole and 4-pole versions.
A flat gasket seal is included which, when screwed on, guarantees
IP 65 protection.

Ordering data

Type	(Qty.=1)	Order No.
Type A		
SAIB-VSA-3P/250/9-OB		**1873070000**
SAIB-VSA-4P/250/9-OB		**1873080000**
SAIB-VSA-3P/250/11-OB		**1873090000**
SAIB-VSA-4P/250/11-OB		**1873100000**
SAIB-VSA-3P/230/9/LD		**1873110000**
SAIB-VSA-3P/24/9/LD		**1873120000**
SAIB-VSA-3P/230/9-H/OB		**1873130000**
SAIB-VSA-4P/230/9-H/OB		**1873140000**
SAIB-VSA-3P/230/11-H/OB		**1873150000**
SAIB-VSA-4P/230/11-H/OB		**1873160000**
Type B		
SAIB-VSB-3P/250/9-OB		**1873170000**
SAIB-VSB-3P/24/9/LD		**1873180000**
SAIB-VSBD-3P/250/9-OB		**1873190000**
Type C		
SAIB-VSC-3P/250/7-OB		**1873200000**
SAIB-VSC-4P/250/7-OB		**1873210000**
SAIB-VSCD-3P/250/7-OB		**1873220000**
SAIB-VSCD-4P/250/7-OB		**1873230000**
All types supplied complete with seal.		

Legend

Designation code		
VS-	Valve plug	
OB-	Without cables	
3P, 4P-	No. of poles	
7, 9, 11-	Cable entry (PG)	
H	High form	
T	Transparent housing	
3P	2 + PE	
4P	3 + PE	
LD	24 V LED free-wheel diode	

Type of valve plug	Contact gap	
A	18.0 mm	
B	11.0 mm	to industry standard
BD	10.0 mm	to DIN
C	9.4 mm	to industry standard
CD	8.0 mm	to DIN

Plug in connector Type A
to DIN EN 175301-803

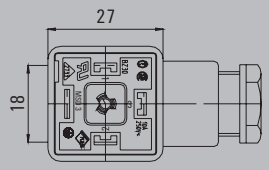

Contact gap: 18 mm

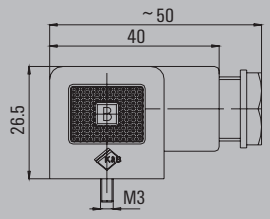

Type VSA

Plug in connector Type B

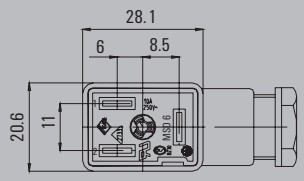

Contact gap: 11 mm
industry standard

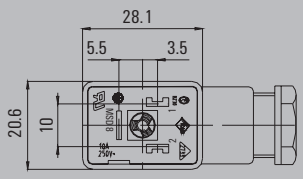

Contact gap: 10 mm
to DIN 43650 (ISO 6952)

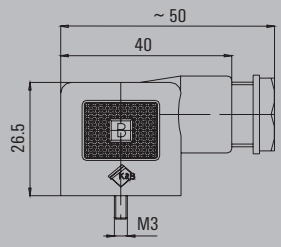

Type VSB/VSBD

Plug in connector Type C

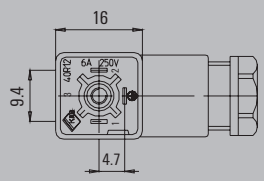

Contact gap: 9.4 mm
industry standard

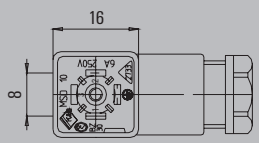

Contact gap: 8 mm
to DIN 43650 (ISO 6952)

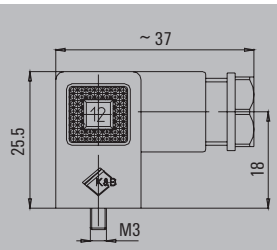

Type VSC/VSCD

Protective sleeve adapter

In machine construction, it is very common for cables to be run in the open air. To be able to protect cables from damage through a wide range of causes such as rodents, it is some-times necessary to protect the cable with a protective sleeve.

To fasten the protective sleeve to a plug in connector designed for custom assembly, Weidmüller offers a protective sleeve adapter. This adapter is used instead of the PG7 cable gland. The protective sleeve is quick to fit, protecting the cable straight away.

Ordering data

Type	Qty.	Order No.
SAI-SSA-PG7	10	1938300000

Fitting a protective sleeve adapter

1. Unscrewing the PG7 cable gland

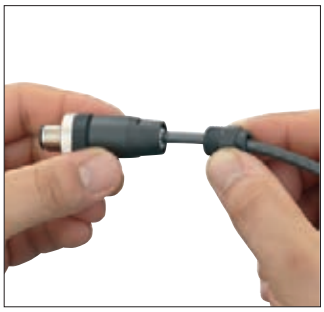

2. Screwing on the protective sleeve adapter

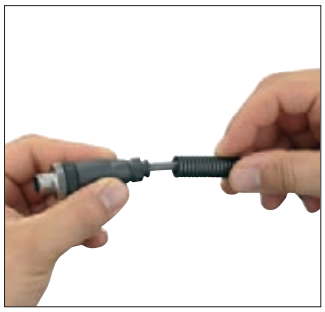

3. Fitting a PG7 protective sleeve

4. Finished

Connection of protective sleeve adapter to other plug connectors

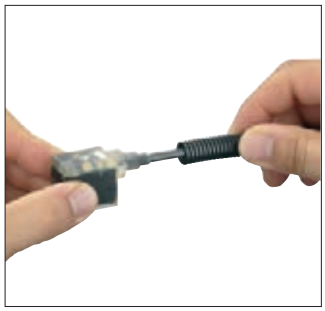

1. Connect the protective tubing to the tube union

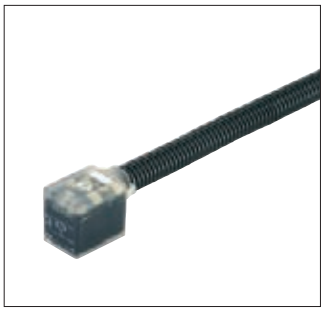

2. Finished

The protective sleeve is also suitable for protecting cables with valve plugs. A corresponding connecting piece is already present on valve plugs with moulded seal.

7/8" connectors

7/8" connectors	Product description	E.2
	Pin Outs	E.3
	Construction of the customisable connector and assembly instructions	E.4
	7/8" connector	E.6
	7/8" built-in connector	E.8
	7/8" sensor cables	E.11

Product description

Connectors with threads measured in inches have been used for many years, mainly outside Europe. The 7/8" thread types are the main group found within this group of products. They are essentially used in bus systems like Fieldbus Foundation or DeviceNet. In recent years these connectors also have become popular as supply ports for I/O nodes, due to the low number of pins and their sturdy construction.

Weidmüller now offers this product range in the following versions:
- Customisable connectors
- Built-in connectors
- Moulded cables.

7/8" connectors are available in 3-pole (2 + PE), 4-pole (3 + PE), 5-pole (4 + PE) versions. Connectors with different pole counts are not plug compatible.
The contact surfaces are gold-plated.

Customisable connectors

In certain circumstances it may be required to be able to assemble cables yourself. This may be for various reasons. For example, the length of the cable cannot be determined in advance, or during servicing, there may be a requirement to produce connections yourself. So that this can be easily achieved, simple connection solutions are required. With 7/8" connectors the screw connection provides the best solution due to its small dimensions and easy assembly. These customisable connectors also have sufficient space for the stranded wire ends. Weidmüller offers versions with differently sized cable glands to properly fit larger and smaller cable diameters. The contacts are gold-plated, for higher contact reliability.

Pin out

Male insert (mating side)

2+PE-pole

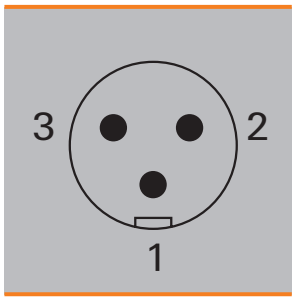

4-pole

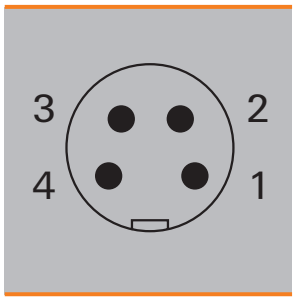

4+PE-pole

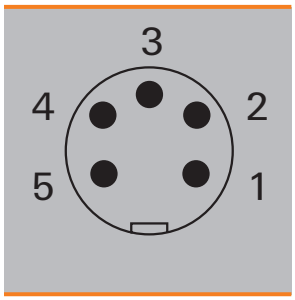

Female insert (mating side)

2+PE-pole

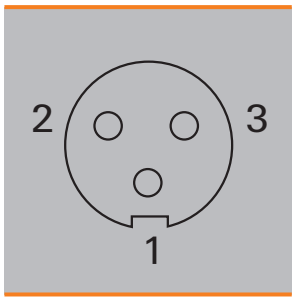

4-pole

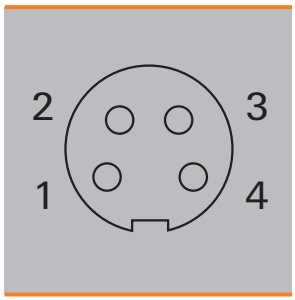

4+PE-pole

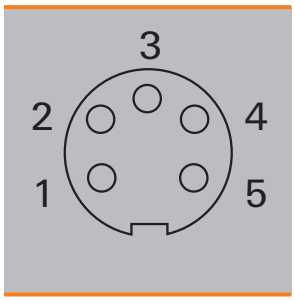

Customisable connector assembly instructions

Straight connector

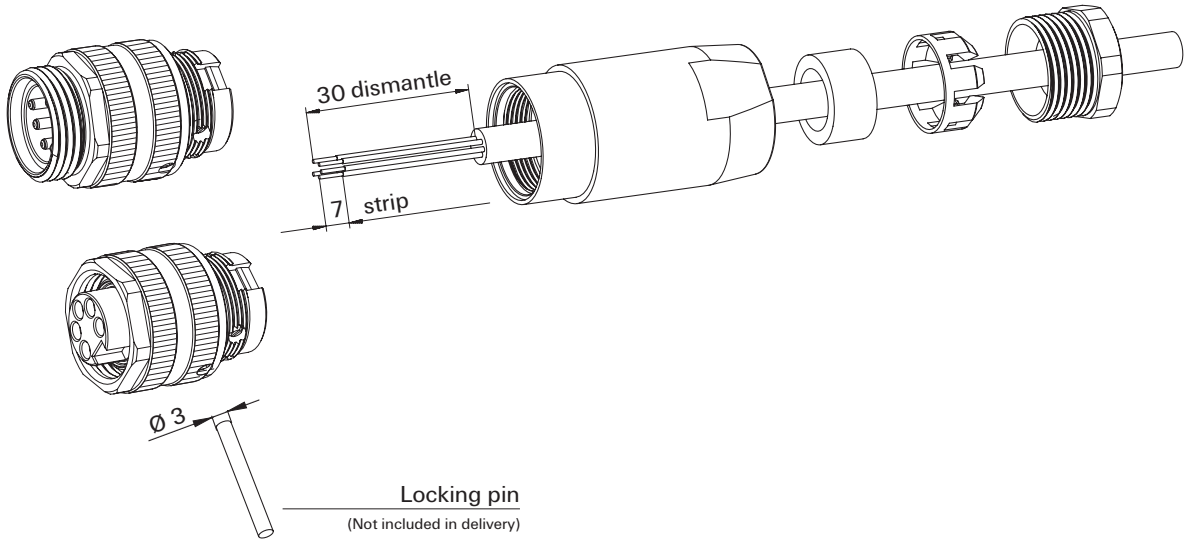

Angled connector

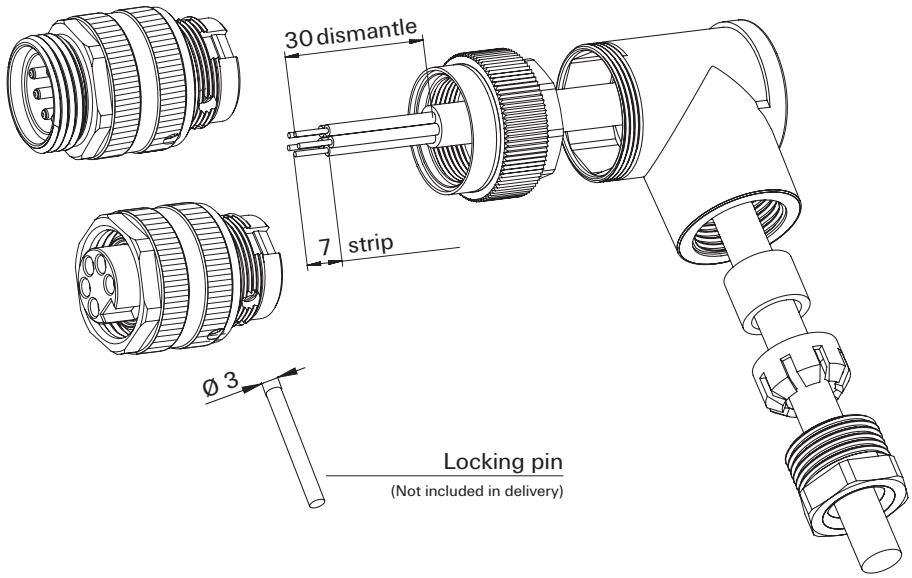

Individual component drawing of the customisable connector

Straight connector

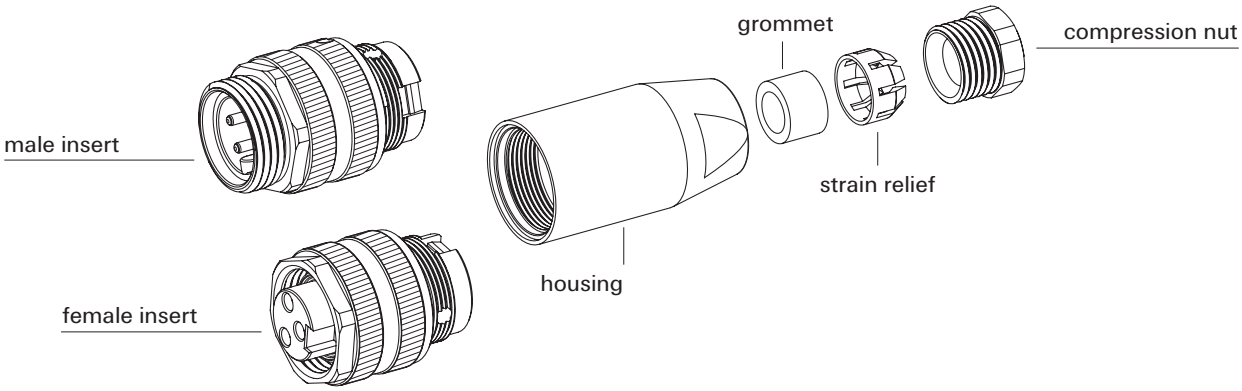

Angled connector

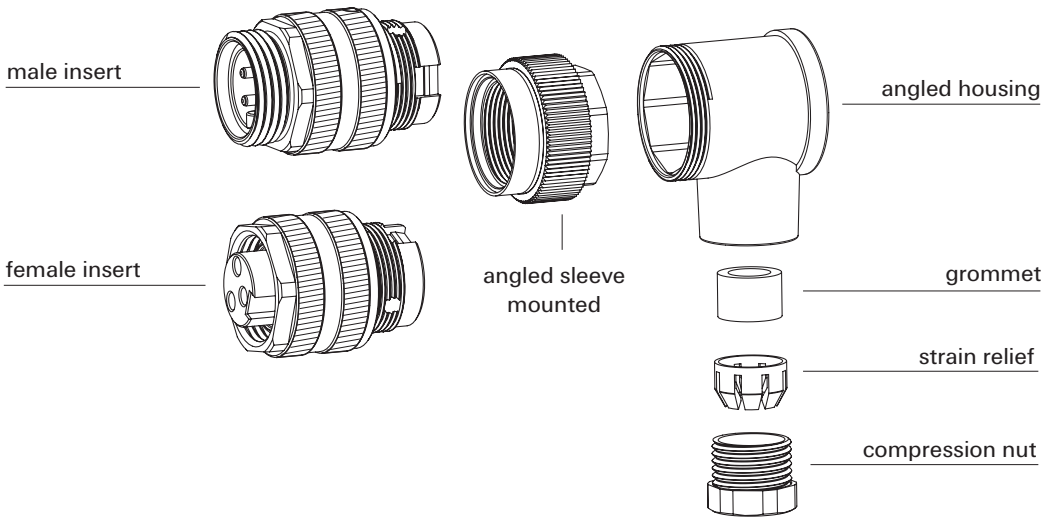

Screw connection 7/8", PG9
Cable diameter 6...8 mm

SAIS / SAIB

Straight

SAISW / SAIBW

Angled

Ordering data

Male		Type	QTY	Order No.	Type	QTY	Order No.
	3-pole. PG 9	SAIS-3/9-7/8"	1	1291870000	SAISW-3/9-7/8"	1	1291890000
	4-pole. PG 9	SAIS-4/9-7/8"	1	1808840000	SAISW-4/9-7/8"	1	1808830000
	5-pole. PG 9	SAIS-5/9-7/8"	1	1301220000	SAISW-5/9-7/8"	1	1291980000
Socket							
	3-pole. PG 9	SAIB-3/9-7/8"	1	1291910000	SAIBW-3/9-7/8"	1	1291930000
	4-pole. PG 9	SAIB-4/9-7/8"	1	1812480000	SAIBW-4/9-7/8"	1	1812470000
	5-pole. PG 9	SAIB-5/9-7/8"	1	1292000000	SAIBW-5/9-7/8"	1	1292020000
Note							

Technical data

Type of connection	Screw connection	Screw connection
Housing main material	PBT	PBT
Contact tube diameter	7/8"	7/8"
Cable diameter	6...8 mm (PG9)	6...8 mm (PG9)
Wire cross-section, min. / max.	0.5...1.5 mm²	0.5...1.5 mm²
Rated current	9A (4- and 5-pole), 12A (3-pole)	9A (4- and 5-pole), 12A (3-pole)
Rated voltage	250 V	250 V
Temperature range of housing	-25...+85 °C	-25...+85 °C
Protection degree	IP 67	IP 67
Contact surface	Gold-plated	Gold-plated
Contact material	CuZn	CuZn
Plugging cycles	≥ 50	≥ 50
Pollution severity	3	3
Note	Torque, see E.12	Torque, see E.12

Dimensioned drawing

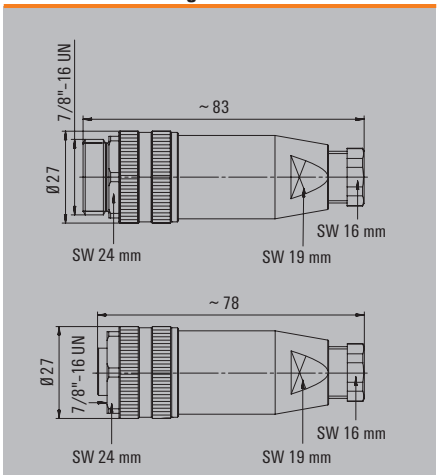

Dimensioned drawing

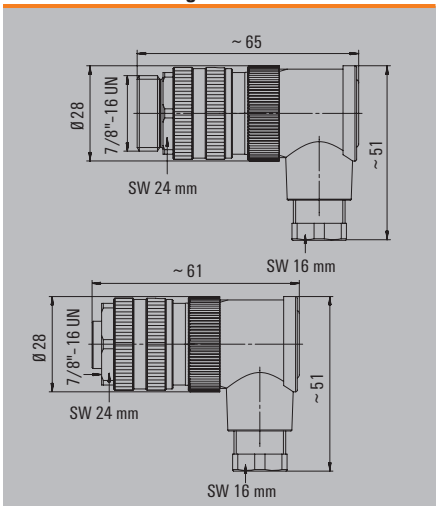

Torque, see E.12

Screw connection 7/8", PG11
Cable diameter 8...10 mm

SAIS / SAIB

Angled

SAISW / SAIBW

Angled

Ordering data

Male	Type	QTY	Order No.	Type	QTY	Order No.
3-pole. PG 11	SAIS-3/11-7/8"	1	1291880000	SAISW-3/11-7/8"	1	1291900000
4-pole. PG 11	SAIS-4/11-7/8"	1	1291950000	SAISW-4/11-7/8"	1	1292040000
5-pole. PG 11	SAIS-5/11-7/8"	1	1291970000	SAISW-5/11-7/8"	1	1291990000
Socket						
3-pole. PG 11	SAIB-3/11-7/8"	1	1291920000	SAIBW-3/11-7/8"	1	1291940000
4-pole. PG 11	SAIB-4/11-7/8"	1	1292050000	SAIBW-4/11-7/8"	1	1292070000
5-pole. PG 11	SAIB-5/11-7/8"	1	1292010000	SAIBW-5/11-7/8"	1	1292030000
Note						

Technical data

Type of connection	Screw connection	Screw connection
Housing main material	PBT	PBT
Contact tube diameter	7/8"	7/8"
Cable diameter	8...10 mm (PG11)	8...10 mm (PG11)
Wire cross-section, min. / max.	0.5...1.5 mm²	0.5...1.5 mm²
Rated current	9A (4- and 5-pole), 12A (3-pole)	9A (4- and 5-pole), 12A (3-pole)
Rated voltage	250 V	250 V
Temperature range of housing	-25...+85 °C	-25...+85 °C
Protection degree	IP 67	IP 67
Contact surface	Gold-plated	Gold-plated
Contact material	CuZn	CuZn
Plugging cycles	≥ 50	≥ 50
Pollution severity	3	3
Note	Torque, see E.12	Torque, see E.12

Dimensioned drawing

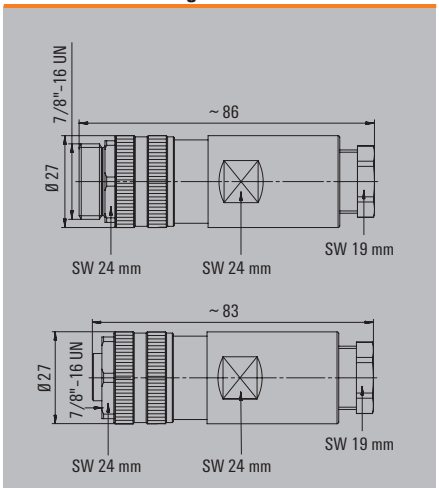

Dimensioned drawing

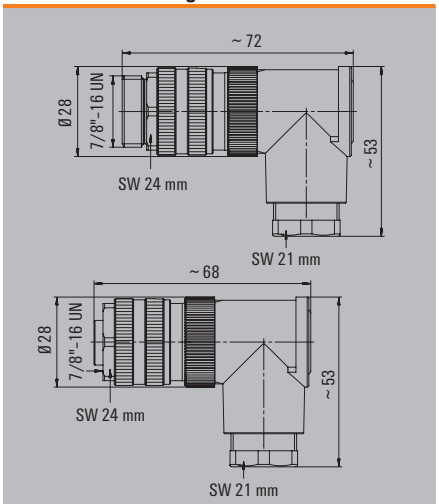

Torque, see E.12

7/8"

Mounts behind wall

Ordering data

Male		Type	QTY	Order No.
	3-pole	SAIE-7/8"S-3-0.2U-H	1	1292350000
	4-pole	SAIE-7/8"S-4-0.2U-H	1	1292420000
	5-pole	SAIE-7/8"S-5-0.2U-H	1	1292490000
Socket				
	3-pole	SAIE-7/8"B-3-0.2U-H	1	1292390000
	4-pole	SAIE-7/8"B-4-0.2U-H	1	1292450000
	5-pole	SAIE-7/8"B-5-0.2U-H	1	1292520000
Note				

Technical data

Housing main material	Zinc diecast, nickel-plated
Contact tube diameter	7/8"
Core cross-section	0.75 mm²
Rated current	8A (4- and 5-pole), 10A (3-pole)
Rated voltage	300 V
Temperature range of housing	-25...+85 °C
Protection degree	IP 67
Contact surface	Gold-plated
Contact material	CuZn
Plugging cycles	≥ 100
Note	

Dimensioned drawing

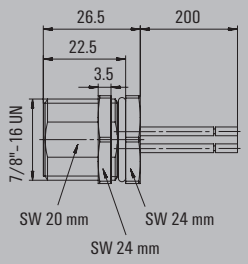

7/8"

PG 11

Ordering data

Male		Type	QTY	Order No.
	3-pole	SAIE-7/8"S-3-0.2U-PG11	1	1292330000
	4-pole	SAIE-7/8"S-4-0.2U-PG11	1	1292400000
	5-pole	SAIE-7/8"S-5-0.2-PG11	1	1292470000
Socket				
	3-pole	SAIE-7/8"B-3-0.2U-PG11	1	1292370000
	4-pole	SAIE-7/8"B-4-0.2U-PG11	1	1292430000
	5-pole	SAIE-7/8"B-5-0.2U-PG11	1	1292500000
Note				

Technical data

Housing main material	Zinc diecast, nickel-plated
Contact tube diameter	7/8"
Core cross-section	0.75 mm²
Rated current	8A (4- and 5-pole), 10A (3-pole)
Rated voltage	300 V
Temperature range of housing	-25...+85 °C
Protection degree	IP 67
Contact surface	Gold-plated
Contact material	CuZn
Plugging cycles	≥ 100
Note	

Dimensioned drawing

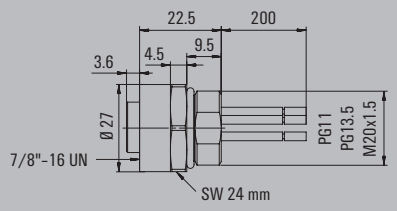

7/8"

PG 13.5

Ordering data

Male		Type	QTY	Order No.
	3-pole	SAIE-7/8"S-3-0.2U-PG13.5	1	1292340000
	4-pole	SAIE-7/8"S-4-0.2U-PG13.5	1	1292410000
	5-pole	SAIE-7/8"S-5-0.2U-PG13.5	1	1292480000
Socket				
	3-pole	SAIE-7/8"B-3-0.2U-PG13.5	1	1292380000
	4-pole	SAIE-7/8"B-4-0.2U-PG13.5	1	1292440000
	5-pole	SAIE-7/8"B-5-0.2U-PG13.5	1	1292510000
Note				

Technical data

Housing main material	Zinc diecast, nickel-plated
Contact tube diameter	7/8"
Core cross-section	0.75 mm²
Rated current	8A (4- and 5-pole), 10A (3-pole)
Rated voltage	300 V
Temperature range of housing	-25...+85 °C
Protection degree	IP 67
Contact surface	Gold-plated
Contact material	CuZn
Plugging cycles	≥ 100
Note	

Dimensioned drawing

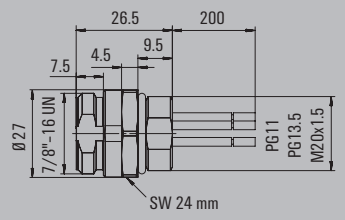

7/8" one end without connector

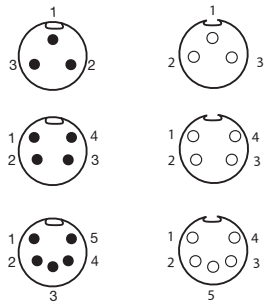

Ordering data

	3-pole	4-pole	5-pole
Male, straight			
1.5 m	SAIL-7/8"G-3-1.5U **1292080150**	SAIL-7/8"G-4-1.5U **1292120150**	SAIL-7/8"G-5-1.5U **1292170150**
Male, angled			
1.5 m	SAIL-7/8"W-3-1.5U **1292090150**	SAIL-7/8"W-4-1.5U **1292130150**	SAIL-7/8"W-5-1.5U **1292180150**
Female, straight			
1.5 m	SAIL-7/8"BG-3-1.5U **1292100150**	SAIL-7/8"BG-4-1.5U **1292140150**	SAIL-7/8"BG-5-1.5U **1292190150**
Female, angled			
1.5 m	SAIL-7/8"BW-3-1.5U **1292110150**	SAIL-7/8"BW-4-1.5U **1292150150**	SAIL-7/8"BW-5-1.5U **1292200150**
Note			

Standard cable lengths

All cables listed in the ordering data have a length of 1.5 metres. The last four ordering digits must be changed when ordering other standard cable lengths.	1.5 m	xxxxxx0150
	3.0 m	xxxxxx0300
	5.0 m	xxxxxx0500
	10.0 m	xxxxxx1000

Technical data

Rated current / Rated voltage	9 A (4- and 5-pole) / 12 A (3-pole) / 300 V
Protection degree	IP 67, IP 68
Core cross-section	1.5 mm²
Contact surface / Contact material	Ni/Au / CuZn
Housing main material	PUR
Sheathing colour	black (similar to RAL 9005)
Temperature range of housing	-25...+85 °C
Plugging cycles	≥ 100
Pollution severity	3

Dimensioned drawing

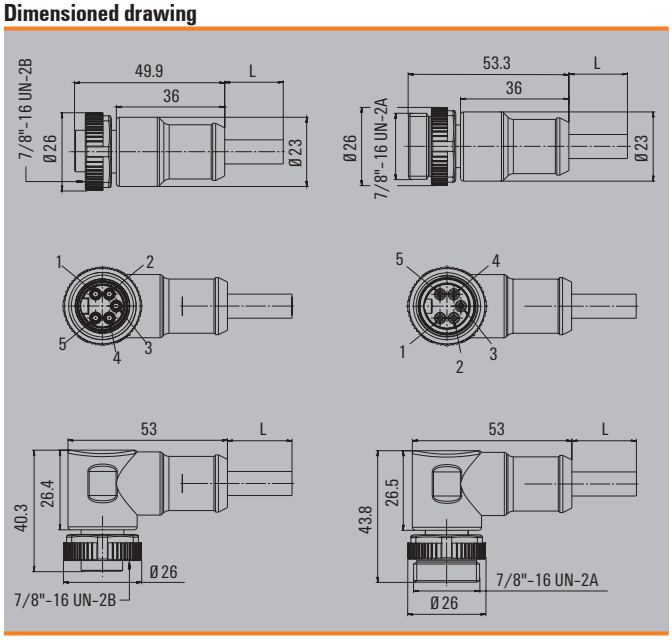

Torques and spanner sizes

Torques and distances across flats of the cable gland

The following values for strain relief apply to plug-in connectors with strain relief

Cable Ø	Min. cable pull strength	Recommended torque of the clamping screw
2 - 3	min. 20 N	0.3 - 0.4 Nm
3 - 4	min. 30 N	0.3 - 0.4 Nm
4 - 5	min. 40 N	0.8 - 1.0 Nm
5 - 6	min. 50 N	0.8 - 1.0 Nm
6 - 7	min. 60 N	0.8 - 1.0 Nm
7 - 8	min. 70 N	0.8 - 1.0 Nm
8 - 12	min. 80 N	1.0 - 1.4 Nm
12 - 14	min. 120 N	1.0 - 1.4 Nm

Note: Torque of the: 7/8" plug-in connector: 1.5 Nm (spanner size: 24)
M 2.5 Threaded bolt: 0.4 Nm

IP 67 Remote I/O system SAI Active

IP 67 Remote I/O system SAI Active	Introduction	F.2
	Quick select – SAI Active	F.4
	SAI Active Universal - Overview	F.6
	SAI Active Universal - PROFIBUS-DP	F.8
	SAI Active Universal - CANopen	F.12
	SAI Active Universal - DeviceNet™	F.16
	SAI Active Universal Pro - Overview	F.20
	SAI Active Universal Pro	F.22
	SAI Active Universal Wireless - Overview	F.34
	SAI Active Universal Wireless	F.36

Sensor Actuator Interface (SAI Active)

Decentralised Remote I/O system with IP 67 protection

Industrial automation solutions are becoming more and more decentralised. The Weidmüller sensor-actuator distributor SAI Active provides a fieldbus interface for digital communication. It is capable of merging all types of signals from the field and transmitting them without interference to the central controller unit. The SAI Active Remote I/O system is available in several variants to support different applications. A wide range of products for industrial automation are available to the user: the basic “SAI-AU” version provides a quick and simple, entry level solution for decentralisation; the professional “SAI-AU Pro” version has versatile extension options and functional modules; and the “SAI-AU Wireless” system provides a radio based solution.

The SAI Active Remote I/O system features IP 67 protection. It provides users with the opportunity to add input and/ or output units to the process in a decentralised manner directly on location. The wiring is uncomplicated with pre-assembled cables and standardised M8 and M12 connectors. This simplifies the installation process and reduces the risk of cabling errors. There is no need for complex parallel wiring of the sensors and actuators. Nor do you need to merge the cables together at a central location or electrical cabinet. The IP 67 modules have a sturdy construction and provide excellent reliability under adverse conditions involving dust, moisture, acids, high temperatures or vibrations.

In comparison to traditional passive solutions which require a separate line from the point of measurement to the controller for each signal, the active modules stand out because they need only one line to digitally transmit all the signals of a standard fieldbus system. The measurement signal is transmitted to the controller unit precisely (i.e., with no drift). Thus there is no need for manual calibration.

The SAI Active Remote I/O system is available for industrial fieldbus protocols (PROFIBUS-DP, DeviceNet™, CANopen, Modbus ASCII) and Ethernet protocols (Modbus TCP and Ethernet/IP). Standardised device drivers are available. They allow you to carry out a vendor-neutral integration into your engineering system without the use of any proprietary software. The drivers can also be used with a wide range of controller units. The diagnostic capabilities of the SAI Active system (available in part using a web browser) make troubleshooting simple. They also significantly reduce the time required for initial commissioning and maintenance. Each module provides a continual specific diagnostic function for each individual channel. When a sensor, actuator or module error is detected, an easily recognised signal is displayed with an arrow icon on the corresponding module. An alert is simultaneously sent on the fieldbus or directly to the controller unit. This allows the application to react quickly so that prompt system analysis can be carried out.

The SAI Active system offers many benefits including less expensive installation and maintenance. It also makes optimal use of space with its compact modules.

This system includes all purpose compact modules and modular subbus components – providing users with decentralised automation that they can profit from as a long term solution.

Weidmüller offers users a wide line of active and passive sensor-actuator distributors for designing a single vendor system. The distributors are versatile enough to be used for practically all industrial automation applications. Our product line is being constantly improved, expanded and adapted to meet future needs.

Use the following table for quickly finding the proper product. Plenty of documentation and software is available to support you during the project planning and initial commissioning phases. All software programs and corresponding product documentation can be downloaded free of charge from the Weidmüller web site.

Quick select – SAI Active

Selection table

Order No.	Product designation	Connection system		Communication								
		M8	M12	PROFIBUS DP	CANopen	DeviceNet™	Modbus ASCII (RS 232 / USB)	Modbus TCP	Ethernet/IP	Subbus	Wireless	
	SAI Active Universal											
1906550000	SAI-AU M8 PB 16DI	X		X								
1906640000	SAI-AU M8 PB 16DI/8DO	X		X								
1975450000	SAI-AU M8 PB 8DI8DO 2A	X		X								
1890020000	SAI-AU M12 PB 16DI		X	X								
1890010000	SAI-AU M12 PB 16DI/8DO		X	X								
1968220000	SAI-AU M12 PB 8DI8DO 2A		X	X								
1890000000	SAI-AU M12 PB AI/AO/DI		X	X								
1906680000	SAI-AU M8 CAN 16DI	X			X							
1906690000	SAI-AU M8 CAN 16DI/8DO	X			X							
1906650000	SAI-AU M12 CAN 16DI		X		X							
1906660000	SAI AU M12 CAN 16DI/8DO		X		X							
1906670000	SAI-AU M12 CAN AI/AO/DI		X		X							
1906730000	SAI-AU M8 DN 16DI	X				X						
1906740000	SAI AU M8 DN 16DI/8DO	X				X						
1906700000	SAI-AU M12 DN 16DI		X			X						
1906710000	SAI AU M12 DN 16DI/8DO		X			X						
1906720000	SAI-AU M12 DN AI/AO/DI		X			X						
	SAI Active Universal Pro											
1024310000	SAI-AU M8 PB GW 16DI	X		X						X		
1938550000	SAI-AU M12 PB GW 16DI		X	X						X		
1938570000	SAI-AU M12 DN GW 16DI		X			X				X		
1962240000	SAI-AU M12 USB GW 8I8O		X				X			X		
1938600000	SAI-AU M8 SB 8DI	X								X		
1938660000	SAI-AU M8 SB 8DO 2A	X								X		
1938630000	SAI-AU M8 SB 8DIO	X								X		
1938610000	SAI-AU M12 SB 8DI		X							X		
1938668000	SAI-AU M12 SB 8DO 2A		X							X		
1938640000	SAI-AU M12 SB 8DIO		X							X		
1938690000	SAI-AU M12 SB 4AI		X							X		
1938700000	SAI-AU M12 SB 4AO		X							X		
1938730000	SAI-AU M12 SB 2Counter		X							X		
1938720000	SAI-AU M12 SB 4Thermo		X							X		
1938710000	SAI-AU M12 SB 4PT100		X							X		
	SAI Active Universal Wireless											
1006980000	SAI-AU M12 GW PB/BT 12I		X	X							X	
1006940000	SAI-AU M12 BT 16DI		X								X	
1006930000	SAI-AU M12 BT 16DI/8DO		X								X	
1006920000	SAI-AU M12 BT4AI2AO2DIO		X								X	

	Inputs					Outputs						
	Digital	Analogue	Counter	TC	RTD	Digital	Output current	Analogue	Output range	Supply voltage feed circuits	Special characteristics	Page
	16									2		F.8
	max.. 16, min. 8 (can be configured)					max.. 8, min. 0 (can be configured)	0.5 A			4	- Max. I/O channels = 16	F.8
	8					8	2 A			4	- Max. total current, output = 8 A	F.8
	16									2		F.8
	max. 16, min. 8 (can be configured)					max. 8, min. 0 (can be configured)	0.5 A			1	- Max. I/O channels = 16	F.8
	8					8	2 A			2	- Max. total current, output = 8 A	F.8
	4	4						2	-10...+10 V, 0...+10 V, 0...20 mA, 4...20 mA	2		F.9
	16									2		F.12
	max. 16, min. 8 (can be configured)					max. 8, min. 0 (can be configured)	0.5 A			4	- Max. I/O channels = 16	F.12
	16									2		F.12
	max. 16, min. 8 (can be configured)					max. 8, min. 0 (can be configured)	0.5 A			4	- Max. I/O channels = 16	F.12
	4	4						2	-10...+10 V, 0...+10 V, 0...20 mA, 4...20 mA	2		F.13
	16									2		F.16
	max. 16, min. 8 (can be configured)					max. 8, min. 0 (can be configured)	0.5 A			4	- Max. I/O channels = 16	F.16
	16									2		F.16
	max. 16, min. 8 (can be configured)					max. 8, min. 0 (can be configured)	0.5 A			4	- Max. I/O channels = 16	F.16
	4	4						2	-10...+10 V, 0...+10 V, 0...20 mA, 4...20 mA	2		F.17
	16									2		F.22
	16									2		F.22
	16									2		F.24
	8					8	0.5 A			2		F.26
	8											F.28
						8	2 A			2	- Max. total current, output = 8 A	F.28
	max. 8, min. 0 (can be configured)					max. 8, min. 0 (can be configured)	0.5 A			2	- Max. I/O channels = 8 - Max. total current, output = 4 A	F.28
	8											F.28
						8	2 A			2	- Max. I/O channels = 8 - Max. total current, output = 4 A	F.28
	max. 8, min. 0 (can be configured)					max. 8, min. 0 (can be configured)	0.5 A			2	- Max. I/O channels = 8	F.28
		4										F.29
								4	-10...+10 V, 0...+10 V, 0...20 mA, 4...20 mA			F.29
			2							2		F.30
				4								F.31
					4							F.32
	12									2		F.37
	16									2		F.37
	max. 16, min. 8 (can be configured)					max. 8, min. 0 (can be configured)	0.5 A			4	- Max. I/O channels = 16	F.37
	max. 4, min. 2 (can be configured)	4				max. 2, min. 0 (can be configured)	0.5 A	2	-10...+10 V, 0...+10 V, 0...20 mA, 4...20 mA	2	- Max. I/O channels = 10	F.37

SAI Active Universal

Compact, basic versions of the Remote I/O system with IP 67 protection

The SAI Active Universal consists of basic, compact designed variants that include a variety of modules for digital and analogue inputs and outputs. The housing has a sturdy construction in compliance with strict industrial requirements. It is resistant against aggressive materials, vibration, shock, temperature, water and dust.

The high quality connection system uses conventional, standardised M8 and M12 connectors with standard compliant coding. They ensure a reliable wiring process with less risk of errors. Two M12 connections for the fieldbus allow for a continuous bus installation without any additional T-distributor. The functional earth connection is automatically created when installing on a metallic earthed base.

4 independent voltage circuits

The modules can be supplied with up to four different voltage potentials. The module voltage can be simultaneously used for the inputs. In addition, up to three feed points are available for outputs; these can be switched off individually depending on the application requirements. Plug in cross connectors can be used to merge voltage potentials on the module.

Efficient diagnostics and status alerts

The status of the I/Os is shown directly on the module using arrow icons. The arrows point to the label and the plug in position. Up to seven status LEDs are available for displaying additional information about the power supply, fieldbus status and group diagnostics. The information is simultaneously transmitted to the controller unit via the bus system.

Freedom of choice

Total compliance with many industrial fieldbus standards: this permits integration with all conventional controllers so that the modules can be used in practically all applications. SAI Active Universal supports PROFIBUS-DP, CANopen, DeviceNet™ communication protocols.

A wide variety of variants

All SAI Active modules with digital inputs or digital outputs are optionally available with standard M8 or M12 connection systems. For modules in the 16DI/8DO series, the configuration can be customised to fit the application so that anywhere between 16DI to 8DI/8DO can be used. Output cables with up to 2 A per channel are used to connect almost any load. Analogue modules can be configured flexibly for the current of voltage outputs.

PROFIBUS-DP
Remote I/O for digital signal processing

SAI-AU

SAI-AU

Ordering data

Module variants	Type	Qty.	Order No.	Type	Qty.	Order No.
16 Digital In; 16 Digital In / 8 Digital Out	SAI-AU M8 PB 16DI	1	1906550000	SAI-AU M8 PB 16DI/8DO	1	1906640000
16 Digital In; 16 Digital In / 8 Digital Out	SAI-AU M12 PB 16DI	1	1890020000	SAI-AU M12 PB 16DI/8DO	1	1890010000
8 Digital In / 8 Digital Out				SAI-AU M8 PB 8DI8DO 2A	1	1975450000
8 Digital In / 8 Digital Out				SAI-AU M12 PB 8DI8DO 2A	1	1968220000
Note						

Technical data

Connections		
Fieldbus (BUS-IN)	1x M12 plug 5-pole, B-coded	1x M12 plug 5-pole, B-coded
Fieldbus (BUS-OUT)	1x M12 female 5-pole, B-coded	1x M12 female 5-pole, B-coded
Supply voltage (AUX-IN)	1x M12 plug 5-pole, A-coded	2x M12 plug 5-pole, A-coded
Supply voltage (AUX-OUT)	1x M12 female 5-pole, A-coded	
I/O connections	16 x M8 socket 3-pole / 8 x M12 socket 5-pole, A-coded	16 x M8 socket 3-pole / 8 x M12 socket 5-pole, A-coded
Voltage supply		
Operating voltage	24 V (18 V DC ... 30 V DC)	24 V (18 V DC ... 30 V DC)
Contact load	Per PIN max. 4 A	Per PIN max. 4 A
Max. total current module	10 A	10 A
Digital inputs		
Permitted input voltage	-30 V to +30 V (protected against polarity reversal)	-30 V to +30 V (protected against polarity reversal)
Input current, low	< 15 mA in accordance with EN 61131-2 Type 1	< 15 mA in accordance with EN 61131-2 Type 1
Input current, high	2 mA to 15 mA in accordance with EN 61131-2 Type 1	2 mA to 15 mA in accordance with EN 61131-2 Type 1
Input current, low	< 15 mA in accordance with EN 61131-2 Type 1	< 15 mA in accordance with EN 61131-2 Type 1
Input current, high	2 mA to 15 mA in accordance with EN 61131-2 Type 1	2 mA to 15 mA in accordance with EN 61131-2 Type 1
Input filter	3 ms	3 ms
Digital outputs		
max. current-carrying capacity per output signal		0.5 A, 2 A
Switching frequency load (resistive / inductive / inrush)		max. 100 Hz / max. 1 Hz / max. 8 Hz
Short-circuit-proof		Yes, cut-off for short circuit and error message
Output voltage, low		0 V DC
Output voltage, high		Supply voltage less 0.7 V DC
Max. total current of outputs		7 A, 8 A
Fieldbus		
Bus system	Profibus-DP	Profibus-DP
Transmission rate	Max. 12 Mbit/s (automatic detection)	Max. 12 Mbit/s (automatic detection)
Addressing	Via rotary coding switch (1 – 126)	Via rotary coding switch (1 – 126)
System integration	GSD file (Device-specific for each module)	GSD file (Device-specific for each module)
General data		
L x W x H	210 mm / 54 mm / 32 mm	210 mm / 54 mm / 32 mm
Earth	< 400 g	< 400 g
Protection degree	IP 67	IP 67
Operating temperature	0 °C...+60 °C	0 °C...+60 °C
Storage temperature	-25 °C...+85 °C	-25 °C...+85 °C
Housing main material / UL 94 flammability rating	Pocan, PBT / V-0	Pocan, PBT / V-0
Certificate	CE, cULus	CE, cULus
Note		

PROFIBUS-DP
Remote I/O for digital and analogue signal processing

SAI-AU

Ordering data

Module variants	Type	Qty.	Order No.
4 Analogue In / 2 Analogue Out / 4 Digital In	SAI-AU M12 PB AI/AO/DI	1	1890000000
Note			

Technical data

Connections	
Fieldbus (BUS-IN)	1x M12 plug 5-pole, B-coded
Fieldbus (BUS-OUT)	1x M12 female 5-pole, B-coded
Supply voltage (AUX-IN)	1x M12 plug 5-pole, A-coded
Supply voltage (AUX-OUT)	1x M12 female 5-pole, A-coded
I/O connections	8 x M12 socket 5-pole, A-coded
Voltage supply	
Operating voltage	24 V (18 V DC ... 30 V DC)
Contact load	Per PIN max. 4 A
Max. total current module	10 A
Digital inputs	
Permitted input voltage	-30 V to +30 V (protected against polarity reversal)
Input current, low	< 15 mA in accordance with EN 61131-2 Type 1
Input current, high	2 mA to 15 mA in accordance with EN 61131-2 Type 1
Input current, low	< 15 mA in accordance with EN 61131-2 Type 1
Input current, high	2 mA to 15 mA in accordance with EN 61131-2 Type 1
Input filter	3 ms
Analogue inputs	
Measurement range	-10 V ... +10 V, 0 V ... 10V, 0 ... 20 mA, 4...20 mA
Maximum input voltage in relation to GND	35 V
Input resistance (load)	<125 Ohm
Max. input current (differential)	-50 mA to +50 mA (protected against polarity reversal)
Short-circuit-proof	Yes
Resolution / Accuracy	12-bit / < 0.2 %
Analogue outputs	
Measurement range	-10 V ... +10 V, 0 V ... 10V, 0 ... 20 mA, 4...20 mA
Output interval	5 ms to 250 ms (can be configured)
Short-circuit-proof	Yes
Resolution / Accuracy	12-bit / < 0.2 %
Fieldbus	
Bus system	Profibus-DP
Transmission rate	Max. 12 Mbit/s (automatic detection)
Addressing	Via rotary coding switch (1 – 126)
System integration	GSD file (Device-specific for each module)
General data	
L x W x H	210 mm / 54 mm / 32 mm
Earth	< 400 g
Protection degree	IP 67
Operating temperature	0 °C...+60 °C
Storage temperature	-25 °C...+85 °C
Housing main material / UL 94 flammability rating	Pocan, PBT / V-0
Certificate	CE, cULus

Note	

Engineering tables for PROFIBUS

When planning the automation of a facility, you must have a wide variety of components available.
These engineering tables list all the components required for wiring up the SAI Active modules.

PROFIBUS modules

PROFIBUS accessories

Sensor/actuator accessories

Markers

Protective caps

Ordering data

Description	Type	Qty.	Order No.
PROFIBUS modules			
16 Digital In	SAI-AU M12 PB 16DI	1	**1890020000**
16 Digital In / 8 Digital Out	SAI-AU M12 PB 16DI/8DO	1	**1890010000**
4 Analogue In / 2 Analogue Out / 4 Digital In	SAI-AU M12 PB AI/AO/DI	1	**1890000000**
8 Digital In / 8 Digital Out	SAI-AU M12 PB 8DI/8DO 2A	1	**1968220000**
16 Digital In	SAI-AU M8 PB 16DI	1	**1906550000**
16 Digital In / 8 Digital Out	SAI-AU M8 PB 16DI/8DO	1	**1906640000**
8 Digital In / 8 Digital Out	SAI-AU M8 PB 8DI/8DO 2A	1	**1975450000**
PROFIBUS accessories			
PROFIBUS cables with female plug and male plug			Chapter C
PROFIBUS cables with female plug and other side open			Chapter C
PROFIBUS cables with male plug and other side open			Chapter C
PROFIBUS plug-in connector			Chapter C
PROFIBUS terminating resistor	SAIEND PB M12 5P B-COD	1	**1784770000**
Sensor/actuator accessories			
Sensor-actuator cables			Chapter B
Sensor-actuator plugs			Chapter D
Markers			
Semi-transparent markers for PrintJet printing	ESG 8/13.5/43.3 SAI AU	5	**1912130000**
Protective caps			
M8 Dust cap (Sensor connections)	SAI-SK M8	50	**1802760000**
M12 Dust cap (Sensor connections)	SAI-SK	30	**9456050000**
M12 Dust cap (Bus-out and power-out)	SAI-SK-M12-UNI	20	**2330260000**
M12 Dust cap (Bus-in and power-in)	SAI-SK plug M12	50	**1781520000**

CANopen
Remote I/O for digital signal processing

CANopen

SAI-AU

SAI-AU

Ordering data

Module variants	Type	QTY	Order No.	Type	QTY	Order No.
16 Digital In; 16 Digital In / 8 Digital Out	SAI-AU M8 CAN 16DI	1	1906680000	SAI-AU M8 CAN 16DI/8DO	1	1906690000
16 Digital In; 16 Digital In / 8 Digital Out	SAI-AU M12 CAN 16DI	1	1906650000	SAI-AU M12 CAN 16DI/8DO	1	1906660000
Note						

Technical data

Connections		
Fieldbus (BUS-IN)	1x M12 plug 5-pole, A-coded	1x M12 plug 5-pole, A-coded
Fieldbus (BUS-OUT)	1x M12 female 5-pole, A-coded	1x M12 female 5-pole, A-coded
Supply voltage (AUX-IN)	1x M12 plug 5-pole, A-coded	2x M12 plug 5-pole, A-coded
Supply voltage (AUX-OUT)	1x M12 female 5-pole, A-coded	
I/O connections	16 x M8 socket 3-pole / 8 x M12 socket 5-pole, A-coded	16 x M8 socket 3-pole / 8 x M12 socket 5-pole, A-coded
Voltage supply		
Operating voltage	24 V (18 V DC ... 30 V DC)	24 V (18 V DC ... 30 V DC)
Contact load	Per PIN max. 4 A	Per PIN max. 4 A
Max. total current module	8 A	8 A
Digital inputs		
Permitted input voltage	-30 V to +30 V (protected against polarity reversal)	-30 V to +30 V (protected against polarity reversal)
Input current, low	< 15 mA in accordance with EN 61131-2 Type 1	< 15 mA in accordance with EN 61131-2 Type 1
Input current, high	2 mA to 15 mA in accordance with EN 61131-2 Type 1	2 mA to 15 mA in accordance with EN 61131-2 Type 1
Input current, low	< 15 mA in accordance with EN 61131-2 Type 1	< 15 mA in accordance with EN 61131-2 Type 1
Input current, high	2 mA to 15 mA in accordance with EN 61131-2 Type 1	2 mA to 15 mA in accordance with EN 61131-2 Type 1
Input filter	3 ms	3 ms
Digital outputs		
max. current-carrying capacity per output signal		0.5 A, 2 A
Switching frequency load (resistive / inductive / inrush)		max. 100 Hz / max. 1 Hz / max. 8 Hz
Short-circuit-proof		Yes, cut-off for short circuit and error message
Output voltage, low		0 V DC
Output voltage, high		Supply voltage less 0.7 V DC
Max. total current of outputs		7 A, 8 A
Fieldbus		
Bus system	CANopen	CANopen
Transmission rate	Max. 1 Mbit/s (automatic detection)	Max. 1 Mbit/s (automatic detection)
Addressing	Via rotary coding switch (1 – 127)	Via rotary coding switch (1 – 127)
System integration	EDS file (Device-specific for each module)	EDS file (Device-specific for each module)
General data		
L x W x H	210 mm / 54 mm / 32 mm	210 mm / 54 mm / 32 mm
Earth	< 400 g	< 400 g
Protection degree	IP 67	IP 67
Operating temperature	0 °C...+60 °C	0 °C...+60 °C
Storage temperature	-25 °C...+85 °C	-25 °C...+85 °C
Housing main material / UL 94 flammability rating	Pocan, PBT / V-0	Pocan, PBT / V-0
Certificate	CE, cULus	CE, cULus

Note

CANopen
Remote I/O for digital and analogue signal processing

SAI-AU

Ordering data

Module variants	Type	QTY	Order No.
4 Analogue In / 2 Analogue Out / 4 Digital In	SAI-AU M12 CAN AI/AO/DI	1	1906670000
Note			

Technical data

Connections	
Fieldbus (BUS-IN)	1x M12 plug 5-pole, A-coded
Fieldbus (BUS-OUT)	1x M12 female 5-pole, A-coded
Supply voltage (AUX-IN)	1x M12 plug 5-pole, A-coded
Supply voltage (AUX-OUT)	1x M12 female 5-pole, A-coded
I/O connections	
Voltage supply	
Operating voltage	24 V (18 V DC ... 30 V DC)
Contact load	Per PIN max. 4 A
Max. total current module	8 A
Digital inputs	
Permitted input voltage	-30 V to +30 V (protected against polarity reversal)
Input current, low	< 15 mA in accordance with EN 61131-2 Type 1
Input current, high	2 mA to 15 mA in accordance with EN 61131-2 Type 1
Input current, low	< 15 mA in accordance with EN 61131-2 Type 1
Input current, high	2 mA to 15 mA in accordance with EN 61131-2 Type 1
Input filter	3 ms
Digital outputs	
max. current-carrying capacity per output signal	
Switching frequency load (resistive / inductive / inrush)	
Short-circuit-proof	
Output voltage, low	
Output voltage, high	
Max. total current of outputs	
Fieldbus	
Bus system	CANopen
Transmission rate	Max. 1 Mbit/s (automatic detection)
Addressing	Via rotary coding switch (1 – 127)
System integration	EDS file (Device-specific for each module)
General data	
L x W x H	210 mm / 54 mm / 32 mm
Earth	< 400 g
Protection degree	IP 67
Operating temperature	0 °C...+60 °C
Storage temperature	-25 °C...+85 °C
Housing main material / UL 94 flammability rating	Pocan, PBT / V-0
Certificate	CE, cULus

Note	

Engineering tables for CANopen

When planning the automation of a facility, you must have a wide variety of components available.
These engineering tables list all the components required for wiring up the SAI Active modules.

CANopen modules

CANopen accessories

Sensor/actuator accessories

Markers

Protective caps

Ordering data

Description	Type	Qty.	Order No.
CANopen modules			
16 Digital In	SAI-AU M12 CAN 16DI	1	**1906650000**
16 Digital In / 8 Digital Out	SAI AU M12 CAN 16DI/8DO	1	**1906660000**
4 Analogue In / 2 Analogue Out / 4 Digital In	SAI-AU M12 CAN AI/AO/DI	1	**1906670000**
16 Digital In	SAI-AU M8 CAN 16DI	1	**1906680000**
16 Digital In / 8 Digital Out	SAI-AU M8 CAN 16DI/8DO	1	**1906690000**
CANopen accessories			
CANopen cables with female plug and male plug			Chapter C
CANopen cables with female plug and other side open			Chapter C
CANopen cables with male plug and other side open			Chapter C
CANopen plug-in connector			Chapter C
CANopen terminating resistor	SAIEND CAN-M12 5P A-COD	1	**1784760000**
Sensor/actuator accessories			
Sensor-actuator cables			Chapter B
Sensor-actuator plugs			Chapter D
Markers			
Semi-transparent markers for PrintJet printing	ESG 8/13.5/43.3 SAI AU	5	**1912130000**
Protective caps			
M8 Dust cap (Sensor connections)	SAI-SK M8	50	**1802760000**
M12 Dust cap (Sensor connections)	SAI-SK	30	**9456050000**
M12 Dust cap (Bus-out and power-out)	SAI-SK-M12-UNI	20	**2330260000**
M12 Dust cap (Bus-in and power-in)	SAI-SK plug M12	50	**1781520000**

DeviceNet™
Remote I/O for digital signal processing

SAI-AU

SAI-AU

Ordering data

Module variants	Type	Qty.	Order No.	Type	Qty.	Order No.
16 Digital In; 16 Digital In / 8 Digital Out	SAI-AU M8 DN 16DI	1	1906730000	SAI-AU M8 DN 16DI/8DO	1	1906740000
16 Digital In; 16 Digital In / 8 Digital Out	SAI-AU M12 DN 16DI	1	1906700000	SAI-AU M12 DN 16DI/8DO	1	1906710000
Note						

Technical data

Connections		
Fieldbus (BUS-IN)	1x M12 plug 5-pole, A-coded	1x M12 plug 5-pole, A-coded
Fieldbus (BUS-OUT)	1x M12 female 5-pole, A-coded	1x M12 female 5-pole, A-coded
Supply voltage (AUX-IN)	1x M12 plug 5-pole, A-coded	2x M12 plug 5-pole, A-coded
Supply voltage (AUX-OUT)	1x M12 female 5-pole, A-coded	
I/O connections	16 x M8 socket 3-pole / 8 x M12 socket 5-pole, A-coded	16 x M8 socket 3-pole / 8 x M12 socket 5-pole, A-coded
Voltage supply		
Operating voltage	24 V (18 V DC ... 30 V DC)	24 V (18 V DC ... 30 V DC)
Contact load	Per PIN max. 4 A	Per PIN max. 4 A
Max. total current module	8 A	8 A
Digital inputs		
Permitted input voltage	-30 V to +30 V (protected against polarity reversal)	-30 V to +30 V (protected against polarity reversal)
Input current, low	< 15 mA in accordance with EN 61131-2 Type 1	< 15 mA in accordance with EN 61131-2 Type 1
Input current, high	2 mA to 15 mA in accordance with EN 61131-2 Type 1	2 mA to 15 mA in accordance with EN 61131-2 Type 1
Input current, low	< 15 mA in accordance with EN 61131-2 Type 1	< 15 mA in accordance with EN 61131-2 Type 1
Input current, high	2 mA to 15 mA in accordance with EN 61131-2 Type 1	2 mA to 15 mA in accordance with EN 61131-2 Type 1
Input filter	3 ms	3 ms
Digital outputs		
max. current-carrying capacity per output signal		0.5 A, 2 A
Switching frequency load (resistive / inductive / inrush)		max. 100 Hz / max. 1 Hz / max. 8 Hz
Short-circuit-proof		Yes, cut-off for short circuit and error message
Output voltage, low		0 V DC
Output voltage, high		Supply voltage less 0.7 V DC
Max. total current outputs		7 A
Fieldbus		
Bus system	DeviceNet™	DeviceNet™
Transmission rate	Max. 500 kBit/s (automatic detection)	Max. 500 kBit/s (automatic detection)
Addressing	Via rotary coding switch (0 – 63)	Via rotary coding switch (0 – 63)
System integration	EDS file (Device-specific for each module)	EDS file (Device-specific for each module)
General data		
L x W x H	210 mm / 54 mm / 32 mm	210 mm / 54 mm / 32 mm
Earth	< 400 g	< 400 g
Protection degree	IP 67	IP 67
Operating temperature	0 °C...+60 °C	0 °C...+60 °C
Storage temperature	-25 °C...+85 °C	-25 °C...+85 °C
Housing main material / UL 94 flammability rating	Pocan, PBT / V-0	Pocan, PBT / V-0
Certificate	CE, cULus	CE, cULus

Note

DeviceNet™
Remote I/O for digital and analogue signal processing

SAI-AU

Ordering data

Module variants	
	4 Analogue In / 2 Analogue Out / 4 Digital In
Note	

Type	Qty.	Order No.
SAI-AU M12 DN AI/AO/DI	1	1906720000

Technical data

Connections	
Fieldbus (BUS-IN)	1x M12 plug 5-pole, A-coded
Fieldbus (BUS-OUT)	1x M12 female 5-pole, A-coded
Supply voltage (AUX-IN)	1x M12 plug 5-pole, A-coded
Supply voltage (AUX-OUT)	1x M12 female 5-pole, A-coded
I/O connections	8 x M12 socket 5-pole, A-coded
Voltage supply	
Operating voltage	24 V (18 V DC ... 30 V DC)
Contact load	Per PIN max. 4 A
Max. total current module	8 A
Digital inputs	
Permitted input voltage	-30 V to +30 V (protected against polarity reversal)
Input current, low	< 15 mA in accordance with EN 61131-2 Type 1
Input current, high	2 mA to 15 mA in accordance with EN 61131-2 Type 1
Input current, low	< 15 mA in accordance with EN 61131-2 Type 1
Input current, high	2 mA to 15 mA in accordance with EN 61131-2 Type 1
Input filter	3 ms
Analogue inputs	
Measurement range	-10 V ... +10 V, 0 V ... 10 V, 0 ... 20 mA, 4...20 mA
Maximum input voltage in relation to GND	35 V
Input resistance (load)	<125 Ohm
Max. input current (differential)	-50 mA to +50 mA (protected against polarity reversal)
Short-circuit-proof	Yes
Resolution / Accuracy	12-bit / < 0.2 %
Analogue outputs	
Measurement range	-10 V ... +10 V, 0 V ... 10 V, 0 ... 20 mA, 4...20 mA
Output interval	5 ms to 250 ms (can be configured)
Short-circuit-proof	Yes
Resolution / Accuracy	12-bit / < 0.2 %
Fieldbus	
Bus system	DeviceNet™
Transmission rate	Max. 500 kBit/s (automatic detection)
Addressing	Via rotary coding switch (0 – 63)
System integration	EDS file (Device-specific for each module)
General data	
L x W x H	210 mm / 54 mm / 32 mm
Earth	< 400 g
Protection degree	IP 67
Operating temperature	0 °C...+60 °C
Storage temperature	-25 °C...+85 °C
Housing main material / UL 94 flammability rating	Pocan, PBT / V-0
Certificate	CE, cULus

Note

Engineering tables for DeviceNet™

When planning the automation of a facility, you must have a wide variety of components available.
These engineering tables list all the components required for wiring up the SAI Active modules.

DeviceNet™ modules

DeviceNet™ accessories

Sensor/actuator accessories

Markers

Protective caps

Ordering data

Description	Type	Qty.	Order No.
DeviceNet™ modules			
16 Digital In	SAI-AU M12 DN 16DI	1	**1906700000**
16 Digital In / 8 Digital Out	SAI-AU M12 DN 16DI/8DO	1	**1906710000**
4 Analogue In / 2 Analogue Out / 4 Digital In	SAI-AU M12 DN AI/AO/DI	1	**1906720000**
16 Digital In	SAI-AU M8 DN 16DI	1	**1906730000**
16 Digital In / 8 Digital Out	SAI-AU M8 DN 16DI/8DO	1	**1906740000**
DeviceNet™ accessories			
DeviceNet™ cables with female plug and male plug			Chapter C
DeviceNet™ cables with female plug and other side open			Chapter C
DeviceNet™ cables with male plug and other side open			Chapter C
DeviceNet™ plug-in connector			Chapter C
DeviceNet™ terminating resistor	SAIEND CAN-M12 5P A-COD	1	**1784760000**
Sensor/actuator accessories			
Sensor-actuator cables			Chapter B
Sensor-actuator plugs			Chapter D
Markers			
Semi-transparent markers for PrintJet printing	ESG 8/13.5/43.3 SAI AU	5	**1912130000**
Protective caps			
M8 Dust cap (Sensor connections)	SAI-SK M8	50	**1802760000**
M12 Dust cap (Sensor connections)	SAI-SK	30	**9456050000**
M12 Dust cap (Bus-out and power-out)	SAI-SK-M12-UNI	20	**2330260000**
M12 Dust cap (Bus-in and power-in)	SAI-SK plug M12	50	**1781520000**

SAI Active Universal Pro

Professional versions of the Remote I/O System featuring IP 67 protection

The modules in the SAI Active Universal Pro systems provide additional I/O and functional modules for more versatile topologies. The extension modules come in a compact, space-saving design. They can also be mounted on the side because of the additional drilled holes in the side of the housing. Up to 15 extension modules can be connected over a distance of 50 metres using a shielded, standard M8 sensor cable and the SAI fieldbus module.

In addition to the digital input and output modules, we also offer counter unit modules, thermal modules, RTD modules and analogue modules. The digital input and output modules are also available in M8 and M12 variants. The analogue modules and functional modules are available with M12 connections. Markers are included with every SAI Active module for labelling the I/O channels and the entire device. These markers can be printed on using the PrintJet system from Weidmüller.

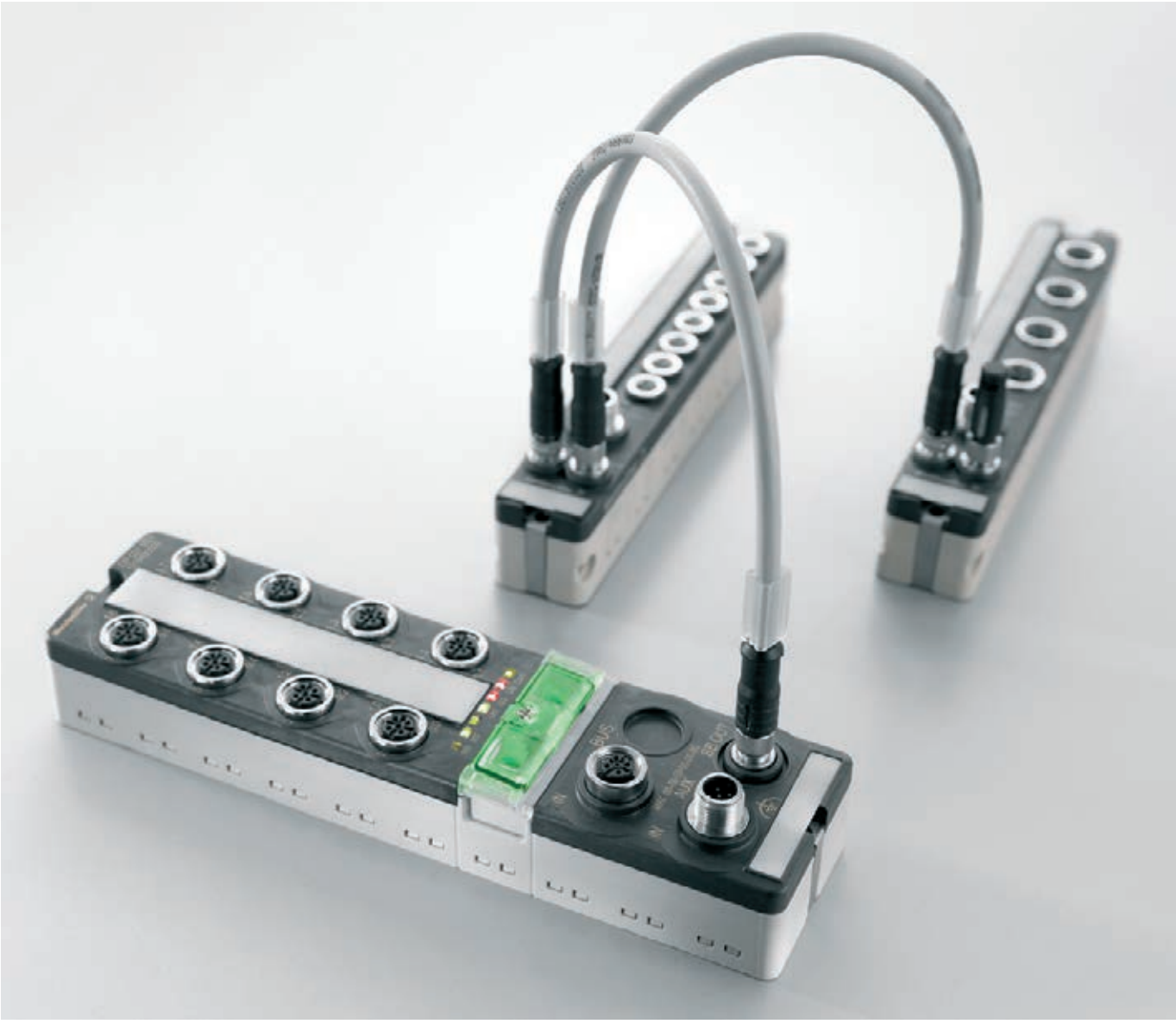

Cost-effective Subbus system

Subbus modules are wired up using conventional, shielded, standard M8 sensor cables. Thus there is no need for expensive custom cables. The extension modules enable versatile expansion and minimise the costs associated with the fieldbus interface. The modules do not, however, detract from the performance of the fieldbus system.

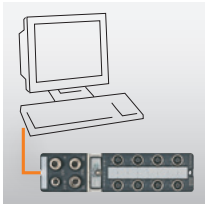

Integration with an industrial PC

Weidmüller offers an SAI Active Universal Pro module with USB and RS232 interfaces especially for controllers or industrial PCs without any Fieldbus connection. A driver is used to set up the connection; communication is based on the standard Modbus ASCII format. All available extension modules can be used on these components and can be accessed via the controller.

Simplified installation

The modules have a compact, space-saving design with additional holes drilled on the side of the housing: this allows them to be installed in a quick and versatile manner. All SAI Active modules with digital inputs or digital outputs are optionally available with standard M8 or M12 connection systems. The outputs are short-circuit-proof and protected against polarity reversal.

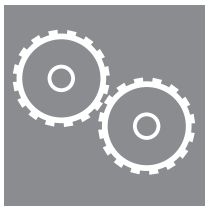

Efficient engineering

All Pro-System modules are described in the standardised fieldbus specific device description files. They can be integrated into any controller unit and corresponding engineering system regardless of the particular manufacturer. The configuration (whether for the input, DESINA input, or output) is carried out without any additional software. Any user can configure directly from the engineering system.

Gateway modules with digital inputs

SAI-AU GW

SAI-AU GW

Ordering data

Module variants	Type	Qty.	Order No.	Type	Qty.	Order No.
16 Digital In	SAI-AU M12 PB GW 16DI	1	1938550000	SAI-AU M8 PB GW 16DI	1	1024310000
Note						

Technical data

Connections		
Fieldbus (BUS-IN)	1x M12 plug 5-pole, B-coded	1x M12 plug 5-pole, B-coded
Fieldbus (BUS-OUT)	1x M12 female 5-pole, B-coded	1x M12 female 5-pole, B-coded
Supply voltage (AUX-IN)	1x M12 plug 5-pole, A-coded	1x M12 plug 5-pole, A-coded
Connection to Subbus (SUB-OUT)	1 x M8 female 4-pole, A-coded	1 x M8 female 4-pole, A-coded
I/O connections	8 x M12 socket 5-pole, A-coded	16x M8 female 3-pole
Voltage supply		
Operating voltage	24 V (18 V DC ... 30 V DC)	24 V (18 V DC ... 30 V DC)
Contact load	Per PIN max. 4 A	Per PIN max. 4 A
Max. total current module	8 A	8 A
Digital inputs		
Permitted input voltage	-30 V to +30 V (protected against polarity reversal)	-30 V to +30 V (protected against polarity reversal)
Input current, low	< 15 mA in accordance with EN 61131-2 Type 1	< 15 mA in accordance with EN 61131-2 Type 1
Input current, high	2 mA to 15 mA in accordance with EN 61131-2 Type 1	2 mA to 15 mA in accordance with EN 61131-2 Type 1
Input current, low	< 15 mA in accordance with EN 61131-2 Type 1	< 15 mA in accordance with EN 61131-2 Type 1
Input current, high	2 mA to 15 mA in accordance with EN 61131-2 Type 1	2 mA to 15 mA in accordance with EN 61131-2 Type 1
Input filter	1 ms, 3 ms, 5 ms, 10 ms, Configurable	1 ms, 3 ms, 5 ms, 10 ms, Configurable
Fieldbus		
Bus system	Profibus-DP	Profibus-DP
Transmission rate	Max. 12 Mbit/s (automatic detection)	Max. 12 Mbit/s (automatic detection)
Addressing	Via rotary coding switch (1 – 126)	Via rotary coding switch (1 – 126)
System integration	GSD file	GSD file
General data		
L x W x H	210 mm / 54 mm / 32 mm	210 mm / 54 mm / 32 mm
Earth	< 350 g	< 350 g
Protection degree	IP 67	IP 67
Operating temperature	0 °C...+60 °C	0 °C...+60 °C
Storage temperature	-25 °C...+85 °C	-25 °C...+85 °C
Housing main material / UL 94 flammability rating	Pocan, PBT / V-0	Pocan, PBT / V-0
Certificate	CE, cULus	CE, cULus

Note		

Engineering tables for PROFIBUS

When planning the automation of a facility, you must have a wide variety of components available.
These engineering tables list all the components required for wiring up the SAI Active modules.

PROFIBUS modules

PROFIBUS accessories

Subbus cables / terminating resistor

Sensor/actuator accessories

Markers

Protective caps

Ordering data

Description	Type	Qty.	Order No.
PROFIBUS modules			
PROFIBUS Gateway M12	SAI-AU M12 PB GW 16DI	1	**1938550000**
PROFIBUS Gateway M8	SAI-AU M8 PB GW 16DI	1	**1024310000**
Subbus module	SAI-AU M12 SB 8DI	1	**1938610000**
Subbus module	SAI-AU M12 SB 8DI/8DO	1	**1938640000**
Subbus module	SAI-AU M8 SB 8DI	1	**1938600000**
Subbus module	SAI-AU M8 SB 8DI/8DO	1	**1938630000**
Subbus module	SAI-AU M12 SB AI	1	**1938690000**
Subbus module	SAI-AU M12 SB AO	1	**1938700000**
Subbus module	SAI-AU M12 SB PT100	1	**1938710000**
Subbus module	SAI-AU M12 SB Thermo	1	**1938720000**
Subbus module	SAI-AU M12 SB Zähler	1	**1938730000**
Subbus module	SAI-AU M8 SB 8DO 2A	1	**1938660000**
Subbus module	SAI-AU M12 SB 8DO 2A	1	**1938680000**
PROFIBUS accessories			
PROFIBUS cables with female plug and male plug			Chapter C
PROFIBUS cables with female plug and other side open			Chapter C
PROFIBUS cables with male plug and other side open			Chapter C
PROFIBUS plug-in connector			Chapter C
PROFIBUS terminating resistor	SAIEND PB M12 5P B-COD	1	**1784770000**
Subbus cables / Terminating resistor			
Subbus cables			Chapter C
Subbus terminating resistor	SAIEND CAN M8 4P	1	**1955340000**
Sensor/actuator accessories			
Sensor-actuator cables			Chapter B
Sensor-actuator plugs			Chapter D
Markers			
Semi-transparent markers for PrintJet printing	ESG 8/13.5/43.3 SAI AU	5	**1912130000**
Protective caps			
M8 Dust cap (Sensor connections)	SAI-SK M8	50	**1802760000**
M12 Dust cap (Sensor connections)	SAI-SK	30	**9456050000**
M12 Dust cap (Bus-out and power-out)	SAI-SK-M12-UNI	20	**2330260000**
M12 Dust cap (Bus-in and power-in)	SAI-SK plug M12	50	**1781520000**

Gateway modules with digital inputs

SAI-AU GW

Ordering data

Module variants	
	16 Digital In
Note	

Type	Qty.	Order No.
SAI-AU M12 DN GW 16DI	1	1938570000

Technical data

Connections	
Fieldbus (BUS-IN)	1x M12 plug 5-pole, A-coded
Fieldbus (BUS-OUT)	1x M12 female 5-pole, A-coded
Supply voltage (AUX-IN)	1x M12 plug 5-pole, A-coded
Connection to Subbus (SUB-OUT)	1 x M8 female 4-pole, A-coded
I/O connections	8 x M12 socket 5-pole, A-coded
Voltage supply	
Operating voltage	24 V (18 V DC ... 30 V DC)
Contact load	Per PIN max. 4 A
Max. total current module	8 A
Digital inputs	
Permitted input voltage	-30 V to +30 V (protected against polarity reversal)
Input current, low	< 15 mA in accordance with EN 61131-2 Type 1
Input current, high	2 mA to 15 mA in accordance with EN 61131-2 Type 1
Input current, low	< 15 mA in accordance with EN 61131-2 Type 1
Input current, high	2 mA to 15 mA in accordance with EN 61131-2 Type 1
Input filter	1 ms, 3 ms, 5 ms, 10 ms, Configurable
Fieldbus	
Bus system	DeviceNet
Transmission rate	Max. 500 kBit/s (automatic detection)
Addressing	Via rotary coding switch (0 – 63)
System integration	EDS file
General data	
L x W x H	210 mm / 54 mm / 32 mm
Earth	< 350 g
Protection degree	IP 67
Operating temperature	0 °C...+60 °C
Storage temperature	-25 °C...+85 °C
Housing main material / UL 94 flammability rating	Pocan, PBT / V-0
Certificate	CE, cULus

Note

Engineering table for DeviceNet™

When planning the automation of a facility, you must have a wide variety of components available.
These engineering tables list all the components required for wiring up the SAI Active modules.

DeviceNet™ and EtherNet/IP™ modules

DeviceNet™ and EtherNet/IP™ accessories

Subbus cables / terminating resistor

Sensor/actuator accessories

Markers

Protective caps

Ordering data

Description	Type	Qty.	Order No.
DeviceNet™ and EthernetIP™ modules			
DeviceNet™ Gateway	SAI-AU M12 DN GW 16DI	1	**1938570000**
Subbus module	SAI-AU M12 SB 8DI	1	**1938610000**
Subbus module	SAI-AU M12 SB 8DI/8DO	1	**1938640000**
Subbus module	SAI-AU M8 SB 8DI	1	**1938600000**
Subbus module	SAI-AU M8 SB 8DI/8DO	1	**1938630000**
Subbus module	SAI-AU M12 SB AI	1	**1938690000**
Subbus module	SAI-AU M12 SB AO	1	**1938700000**
Subbus module	SAI-AU M12 SB PT100	1	**1938710000**
Subbus module	SAI-AU M12 SB Thermo	1	**1938720000**
Subbus module	SAI-AU M12 SB Zähler	1	**1938730000**
Subbus module	SAI-AU M8 SB 8DO 2A	1	**1938660000**
Subbus module	SAI-AU M12 SB 8DO 2A	1	**1938680000**
DeviceNET™ and EthernetIP™ accessories			
DeviceNet™ cables with female plug and male plug			Chapter C
DeviceNet™ cables with female plug and other side open			Chapter C
DeviceNet™ cables with male plug and other side open			Chapter C
DeviceNet™ plug-in connector			Chapter C
DeviceNet™ terminating resistor	SAIEND CAN-M12 5P A-COD	1	**1784760000**
Subbus cables / Terminating resistor			
Subbus cables			Chapter C
Subbus terminating resistor	SAIEND CAN M8 4P	1	**1955340000**
Sensor/actuator accessories			
Sensor-actuator cables			Chapter B
Sensor-actuator plugs			Chapter D
Markers			
Semi-transparent markers for PrintJet printing	ESG 8/13.5/43.3 SAI AU	5	**1912130000**
Protective caps			
M8 Dust cap (Sensor connections)	SAI-SK M8	50	**1802760000**
M12 Dust cap (Sensor connections)	SAI-SK	30	**9456050000**
M12 Dust cap (Bus-out and power-out)	SAI-SK-M12-UNI	20	**2330260000**
M12 Dust cap (Bus-in and power-in)	SAI-SK plug M12	50	**1781520000**

Gateway modules with digital inputs / outputs

SAI-AU GW

Ordering data

Module variants	
	16 Digital In; 8 Digital In / 8 Digital Out
Note	

Type	Qty.	Order No.
SAI-AU M12 USB GW 8I8O	1	1962240000

Technical data

Connections	
Fieldbus (BUS-IN)	1x M12 plug 5-pole, B-coded (BUS-USB)
Fieldbus (BUS-OUT)	1x M12 female 5-pole, B-coded (BUS-RS232)
Supply voltage (AUX-IN)	1x M12 plug 5-pole, A-coded
Connection to Subbus (SUB-OUT)	1 x M8 female 4-pole, A-coded
I/O connections	8 x M12 socket 5-pole, A-coded
Voltage supply	
Operating voltage	24 V (18 V DC ... 30 V DC)
Contact load	Per PIN max. 4 A
Max. total current module	8 A
Digital inputs	
Permitted input voltage	-30 V to +30 V (protected against polarity reversal)
Input current, low	< 15 mA in accordance with EN 61131-2 Type 1
Input current, high	2 mA to 15 mA in accordance with EN 61131-2 Type 1
Input current, low	< 15 mA in accordance with EN 61131-2 Type 1
Input current, high	2 mA to 15 mA in accordance with EN 61131-2 Type 1
Input filter	1 ms, 3 ms, 5 ms, 10 ms, Configurable
Digital outputs	
max. current-carrying capacity per output signal	0.5 A
Switching frequency load (resistive / inductive / inrush)	max. 100 Hz / max. 1 Hz / max. 8 Hz
Short-circuit-proof	Yes, cut-off for short circuit and error message
Output voltage, low	0 V DC
Output voltage, high	Supply voltage less 0.7 V DC
Max. total current outputs	4 A
Fieldbus	
Bus system	Modbus ASCII (RS 232 / USB)
Transmission rate	115.2 kBit/s
Addressing	Static
System integration	Register
General data	
L x W x H	210 mm / 54 mm / 32 mm
Earth	< 350 g
Protection degree	IP 67
Operating temperature	0 °C...+60 °C
Storage temperature	-20 °C...
Housing main material / UL 94 flammability rating	Pocan, PBT / V-0
Certificate	CE, cULus

Note

Engineering tables for Modbus ASCII via RS232 or USB

When planning the automation of a facility, you must have a wide variety of components available.
These engineering tables list all the components required for wiring up the SAI Active modules.

Modbus ASCII and USB modules

Modbus ASCII and USB accessories

Subbus cables / terminating resistor

Sensor/actuator accessories

Markers

Protective caps

Ordering data

Description	Type	Qty.	Order No.
Modbus ASCII and USB modules			
USB Gateway	SAI-AU M12 USB GW 8I8O	1	**1962240000**
Subbus module	SAI-AU M12 SB 8DI	1	**1938610000**
Subbus module	SAI-AU M12 SB 8DI/8DO	1	**1938640000**
Subbus module	SAI-AU M8 SB 8DI	1	**1938600000**
Subbus module	SAI-AU M8 SB 8DI/8DO	1	**1938630000**
Subbus module	SAI-AU M12 SB AI	1	**1938690000**
Subbus module	SAI-AU M12 SB AO	1	**1938700000**
Subbus module	SAI-AU M12 SB PT100	1	**1938710000**
Subbus module	SAI-AU M12 SB Thermo	1	**1938720000**
Subbus module	SAI-AU M12 SB Zähler	1	**1938730000**
Subbus module	SAI-AU M8 SB 8DO 2A	1	**1938660000**
Subbus module	SAI-AU M12 SB 8DO 2A	1	**1938680000**
Modbus ASCII and USB accessories			
USB Module plug-in connector			Chapter C
Subbus cables / Terminating resistor			
Subbus cables			Chapter C
Subbus terminating resistor	SAIEND CAN M8 4P	1	**1955340000**
Sensor/actuator accessories			
Sensor-actuator cables			Chapter B
Sensor-actuator plugs			Chapter D
Markers			
Semi-transparent markers for PrintJet printing	ESG 8/13.5/43.3 SAI AU	5	**1912130000**
Protective caps			
M8 Dust cap (Sensor connections)	SAI-SK M8	50	**1802760000**
M12 Dust cap (Sensor connections)	SAI-SK	30	**9456050000**
M12 Dust cap (Bus-out and power-out)	SAI-SK-M12-UNI	20	**2330260000**
M12 Dust cap (Bus-in and power-in)	SAI-SK plug M12	50	**1781520000**

Subbus modules with digital inputs/outputs

SAI-AU Digital

SAI-AU Digital

Ordering data

Module variants	Type	Qty.	Order No.	Type	Qty.	Order No.
8 Digital In; 8 Digital In / 8 Digital Out	SAI-AU M8 SB 8DI	1	1938600000	SAI-AU M8 SB 8DIO	1	1938630000
8 Digital In; 8 Digital In / 8 Digital Out	SAI-AU M12 SB 8DI	1	1938610000	SAI-AU M12 SB 8DIO	1	1938640000
8 Digital Out 2A				SAI-AU M8 SB 8DO 2A	1	1938660000
8 Digital Out 2A				SAI-AU M12 SB 8DO 2A	1	1938680000
Note						

Technical data

Connections		
Supply voltage (AUX-IN)		1x M12 plug 5-pole, A-coded
Connection to Subbus (SUB-IN)	1 x M8 plug 4-pole, A-coded	1 x M8 plug 4-pole, A-coded
Connection to Subbus (SUB-OUT)	1 x M8 female 4-pole, A-coded	1 x M8 female 4-pole, A-coded
I/O connections	4 x M12 female, 5-pole A-coded	4 x M12 female, 5-pole A-coded
Voltage supply		
Operating voltage	24 V (18 V DC ... 30 V DC)	24 V (18 V DC ... 30 V DC)
Contact load		Per PIN max. 4 A
Max. total current module		8 A
Digital inputs		
Permitted input voltage	-30 V to +30 V (protected against polarity reversal)	-30 V to +30 V (protected against polarity reversal)
Input current, low	< 15 mA in accordance with EN 61131-2 Type 1	< 15 mA in accordance with EN 61131-2 Type 1
Input current, high	2 mA to 15 mA in accordance with EN 61131-2 Type 1	2 mA to 15 mA in accordance with EN 61131-2 Type 1
Input current, low	< 15 mA in accordance with EN 61131-2 Type 1	< 15 mA in accordance with EN 61131-2 Type 1
Input current, high	2 mA to 15 mA in accordance with EN 61131-2 Type 1	2 mA to 15 mA in accordance with EN 61131-2 Type 1
Input filter	1 ms, 3 ms, 5 ms, 10 ms, Configurable	1 ms, 3 ms, 5 ms, 10 ms, Configurable
Separation of potentials to module electronics	none	none
Digital outputs		
max. current-carrying capacity per output signal		2 A
Separation of potentials to module electronics		none
Switching frequency, resistive load		max. 100 Hz
Switching frequency, inductive load		max. 1 Hz
Switching frequency, lamp load		max. 8 Hz
Short-circuit-proof		Yes, cut-off for short circuit and error message
Output voltage, low		0 V DC
Output voltage, high		Supply voltage less 0.7 V DC
Max. total current outputs		4 A
Fieldbus		
Bus system	Subbus	Subbus
Addressing	automatic	automatic
System integration	automatic	automatic
General data		
L x W x H	155 mm / 30 mm / 32 mm	180 mm / 30 mm / 32 mm
Earth	< 200 g	< 200 g
Protection degree	IP 67	IP 67
Operating temperature	0 °C...+60 °C	0 °C...+60 °C
Storage temperature	-25 °C...+85 °C	-25 °C...+85 °C
Housing main material / UL 94 flammability rating	Pocan, PBT / 5VA	Pocan, PBT / 5VA
Certificate	CE, cULus	CE, cULus

Note

Subbus modules with analogue inputs/outputs

SAI-AU analogue

SAI-AU Analog

Ordering data

Module variants	Type	Qty.	Order No.	Type	Qty.	Order No.
4 Analogue Out / 4 Analogue In	SAI-AU M12 SB 4AO	1	1938700000	SAI-AU M12 SB 4AI	1	1938690000
Note						

Technical data

Connections		
Connection to Subbus (SUB-IN)	1 x M8 plug 4-pole, A-coded	1 x M8 plug 4-pole, A-coded
Connection to Subbus (SUB-OUT)	1 x M8 female 4-pole, A-coded	1 x M8 female 4-pole, A-coded
I/O connections	4 x M12 female, 5-pole A-coded	4 x M12 female, 5-pole A-coded
Voltage supply		
Operating voltage	24 V (18 V DC ... 30 V DC)	24 V (18 V DC ... 30 V DC)
Analogue inputs		
Measurement range		-10 V ... +10 V, 0 V ... 10 V, 0 ... 20 mA, 4...20 mA
Maximum input voltage in relation to GND		35 V
Input resistance (load)		<125 Ohm
Max. input current (differential)		-50 mA to +50 mA (protected against polarity reversal)
Short-circuit-proof		Yes
Resolution / Accuracy		12-bit / < 0.2 %
Analogue outputs		
Measurement range	-10 V ... +10 V, 0 V ... 10 V, 0 ... 20 mA, 4...20 mA	
Output interval	5 ms to 250 ms (can be configured)	
Short-circuit-proof	Yes	
Resolution / Accuracy	12-bit / < 0.2 %	
Fieldbus		
Bus system	Subbus	Subbus
Addressing	automatic	automatic
System integration	automatic	automatic
General data		
L x W x H	155 mm / 30 mm / 32 mm	155 mm / 30 mm / 32 mm
Earth	< 200 g	< 200 g
Protection degree	IP 67	IP 67
Operating temperature	0 °C...+60 °C	0 °C...+60 °C
Storage temperature	-25 °C...+85 °C	-25 °C...+85 °C
Housing main material / UL 94 flammability rating	Pocan, PBT / 5VA	Pocan, PBT / 5VA
Certificate	CE, cULus	CE, cULus

Note

Subbus modules with functional inputs

SAI-AU Counter

Ordering data

Module variants	Type	Qty.	Order No.
2 counter inputs / 2 gate outputs	SAI-AU M12 SB 2Counter	1	1938730000
Note			

Technical data

Connections	
Supply voltage (AUX-IN)	1x M12 plug 5-pole, A-coded
Connection to Subbus (SUB-IN)	1 x M8 plug 4-pole, A-coded
Connection to Subbus (SUB-OUT)	1 x M8 female 4-pole, A-coded
I/O connections	4 x M12 female, 5-pole A-coded
Voltage supply	
Operating voltage	24 V (18 V DC ... 30 V DC)
Contact load	Per PIN max. 4 A
Max. total current module	8 A
Functional inputs	
Counting breadth	32 Bit
Switching frequency	100 kHz
Number of inputs	2 x enables, 2 x counters, 2 x count directions
Fieldbus	
Bus system	Subbus
Addressing	automatic
System integration	automatic
General data	
L x W x H	180 mm / 30 mm / 32 mm
Earth	< 200 g
Protection degree	IP 67
Operating temperature	0 °C...+60 °C
Storage temperature	-25 °C...+85 °C
Housing main material / UL 94 flammability rating	Pocan, PBT / 5VA
Certificate	CE, cULus

Note

Subbus modules with functional inputs

SAI-AU Thermo

Ordering data

Module variants		Type	Qty.	Order No.
	4 thermal inputs	SAI-AU M12 SB 4Thermo	1	1938720000
Note				

Technical data

Connections	
Connection to Subbus (SUB-IN)	1 x M8 plug 4-pole, A-coded
Connection to Subbus (SUB-OUT)	1 x M8 female 4-pole, A-coded
I/O connections	4 x M12 female, 5-pole A-coded
Voltage supply	
Operating voltage	24 V (18 V DC ... 30 V DC)
Functional inputs	
Sensor	Types J, K, L, B, E, N, R, S, T, U: mV readings
Temperature range	Typical for sensor, Preset Type K, -100 °C to 1,370 °C
Resolution	0.1 °C per digit
Conversion time	250 ms (can be configured to 70 ms)
Measurement error	< ± 0.5% (of measuring range limit)
Input filter	Configurable
cold junction compensation	External PT1000 connection on pins 1 and 3 (GND)
Fieldbus	
Bus system	Subbus
Addressing	automatic
System integration	automatic
General data	
L x W x H	155 mm / 30 mm32 mm
Earth	< 200 g
Protection degree	IP 67
Operating temperature	0 °C...+60 °C
Storage temperature	-25 °C...+85 °C
Housing main material / UL 94 flammability rating	Pocan, PBT / 5VA
Certificate	CE, cULus

Note	

Subbus modules with functional inputs

SAI-AU PT100

Ordering data

Module variants	
	4 PT100 inputs
Note	

Type	Qty.	Order No.
SAI-AU M12 SB 4PT100	1	**1938710000**

Technical data

Connections	
Connection to Subbus (SUB-IN)	1 x M8 plug 4-pole, A-coded
Connection to Subbus (SUB-OUT)	1 x M8 female 4-pole, A-coded
I/O connections	4 x M12 female, 5-pole A-coded
Voltage supply	
Operating voltage	24 V (18 V DC ... 30 V DC)
Functional inputs	
Sensor	N100, N1000, N120, PT100, PT1000, PT200, PT300, PT500, Potentiometer connection, Resistance measurement
Resolution	0.1 °C per digit
Conversion time	250 ms (can be configured to 65 ms)
Measurement error	< ± 1 °C
Input filter	Configurable
Measurement range for PT sensors	-200 °C ... + 850 °C
Measurement range for Ni sensors	-60 °C ... +250 °C
Resistance measurement	max. 4000 Ohm
Potentiometer	100 to 4000 Ω (three-wire connection)
Measurement current	Typically 0.5 mA
Fieldbus	
Bus system	Subbus
Addressing	automatic
System integration	automatic
General data	
L x W x H	155 mm / 30 mm / 32 mm
Earth	< 200 g
Protection degree	IP 67
Operating temperature	0 °C...+60 °C
Storage temperature	-25 °C...+85 °C
Housing main material / UL 94 flammability rating	Pocan, PBT / 5VA
Certificate	CE, cULus

Note

SAI Active Universal Wireless

Wireless versions of the Remote I/O System with IP 67 protection

Weidmüller offers a remote wireless solution – the SAI Active Universal Wireless series – for providing radio-based communication to movable facility units. The remote modules form a safe, wireless I/O communications network and thus completely replace drag lines containing bus cables or interference-prone slip-ring assemblies. Maintenance and servicing is reduced because no communication cables are needed. Potential sources of error, such as broken shielding in the communication cables, are eliminated all together. Thus the user benefits from long-term cost savings. He requires neither new cables nor installation material for the new communication system. For the engineering system, the change to a wireless system is transparent; it behaves in an identical manner as the cable bound SAI Active Universal Pro System. No complex programming using proprietary software is required. Safe and reliable operations are ensured by the comprehensive diagnostics options on the module and through the higher-level controller.

All wireless modules feature integrated radio-wave antennae and IP 67 protection. They may be used directly in surroundings containing hazardous substances or humidity. The wireless modules bring together the required inputs and outputs in a very compact size. This ensures that the robot arms are not weighted down with bulky modules, additional components or external antennae. The wireless fieldbus module is a master module responsible for establishing communication with the higher-level controller unit and with the wireless I/O (slave) modules. Various slave modules with digital and analogue inputs and outputs are available and enable exact adjustments to the requirements of a given application. The wireless connection between the modules is established automatically and remains invisible to other wireless devices. This ensures that there will be no interference on the connection. The output power and, thus, the range, can be set individually on the module.

Can be used instead of bus cables in drag line or slip chains

In non-stationary applications, a wireless connection can be used instead of the error prone drag-line-based bus cable or slip chain transmission. This helps to minimise facility downtimes and reduce costs for maintenance, installation and materials. The SAI wireless system has a similar handling method compared to cable bound systems so installation is simple and safe.

Coexistence with other wireless systems

The wireless modules transmit in the license free ISM frequency band. This allows them to be used throughout the world. Integrated wireless mechanisms ensure that the modules can be operated at the same time as other wireless systems from other vendors. This ensures communication with no interference and also allows the system to coexist alongside other wireless systems (such as WLAN, ZigBee or Bluetooth).

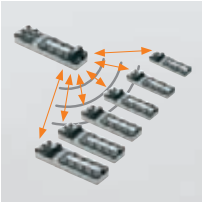

A maximum of 186 modules can be used simultaneously.

The SAI Active Universal Wireless System allows 31 wireless fieldbus modules to be operated simultaneously with six remote I/O modules each. This makes it possible to design an automation solution that can process up to 3348 digital signals. Standardised device description files are provided so that the modules can be integrated into other systems not manufactured by Weidmüller. No special proprietary software is required.

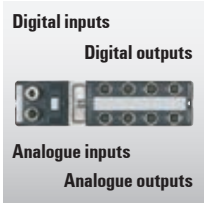

A wide variety of variants

In addition to the fieldbus wireless module with 12 already integrated digital input channels, the SAI Active Universal Wireless product family encompasses other wireless I/O modules with up to 16 digital inputs, up to 8 of which can be configured and used by the user as outputs. A mixed module with both digital and analogue inputs and outputs is also available.

Wireless gateway with digital inputs

Wireless gateway

Ordering data

Module variants	
	12 Digital In
Note	

Type	Qty.	Order No.
SAI-AU M12 GW PB/BT 12I	1	1006980000

Technical data

Connections	
Fieldbus (BUS-IN)	1x M12 plug 5-pole, B-coded
Fieldbus (BUS-OUT)	1x M12 female 5-pole, B-coded
Supply voltage (AUX-IN)	1x M12 plug 5-pole, A-coded
Supply voltage (AUX-OUT)	1x M12 female 5-pole, A-coded
I/O connections	6x M12 female 5-pole
Voltage supply	
Operating voltage	24 V DC (18 V DC ... 30 V DC)
Contact load	Per PIN max. 4 A
Digital inputs	
Permitted input voltage	-30 V to +30 V (protected against polarity reversal)
Input current, low	< 15 mA in accordance with EN 61131-2 Type 1
Input current, high	2 mA to 15 mA in accordance with EN 61131-2 Type 1
Input current, low	< 15 mA in accordance with EN 61131-2 Type 1
Input current, high	2 mA to 15 mA in accordance with EN 61131-2 Type 1
Input filter	1 ms, 3 ms, 5 ms, 10 ms, Configurable
Fieldbus	
Bus system	Profibus-DP
System integration /	GSD file / WIAU0A75.GSD
Range of coverage	In accordance with the PROFIBUS specification
Addressing	Via rotary coding switch (1 – 126)
Communication coexistence	Max. 31 wireless gateways
Properties of radio system	
Frequency band / Channel usage	2.401 GHz ... 2.480 GHz / 1 to 79 channels (can be configured)
Transmit power	0 dBm to 20 dBm / max 100 mW (can be configured)
General data	
L x W x H	210 mm / 54 mm / 52 mm
Earth	< 400 g
Protection degree	IP 67
Operating temperature	0 °C...+60 °C
Storage temperature	-25 °C...+85 °C
Housing main material / UL 94 flammability rating	PBT, Pocan / V-0
Certificate	CE

Note

Engineering tables for PROFIBUS

When planning the automation of a facility, you must have a wide variety of components available.
These engineering tables list all the components required for wiring up the SAI Wireless modules.

PROFIBUS modules

PROFIBUS accessories

Sensor/actuator accessories

Markers

Protective caps

Ordering data

Description	Type	Qty.	Order No.
PROFIBUS modules			
Gateway module with 12 Digital In	SAI-AU M12 GW PB/BT 12I	1	**1006980000**
Subbus module with 16 Digital In	SAI-AU M12 BT 16DI	1	**1006940000**
Subbus module with 16 Digital In / 8 Digital Out	SAI-AU M12 BT 16DI/8DO	1	**1006930000**
Subbus module with 4 Analogue In / 2 Analogue Out / 2 Digital In / 2 Digital Out	SAI-AU M12 BT4AI2AO2DIO	1	**1006920000**
PROFIBUS accessories			
PROFIBUS cables with female plug and male plug			Chapter C
PROFIBUS cables with female plug and other side open			Chapter C
PROFIBUS cables with male plug and other side open			Chapter C
PROFIBUS plug-in connector			Chapter C
PROFIBUS terminating resistor	SAIEND PB M12 5P B-COD	1	**1784770000**
Sensor/actuator accessories			
Sensor-actuator cables			Chapter B
Sensor-actuator plugs			Chapter D
Markers			
Semi-transparent markers for PrintJet printing	ESG 8/13.5/43.3 SAI AU	5	**1912130000**
Protective caps			
M12 Dust cap (Sensor connections)	SAI-SK	30	**9456050000**
M12 Dust cap (Bus-out and power-out)	SAI-SK-M12-UNI	20	**2330260000**
M12 Dust cap (Bus-in and power-in)	SAI-SK plug M12	50	**1781520000**

F

Wireless slave modules for digital signal processing

Wireless slave

Wireless slave

M12

Ordering data

Module variants	Type	Qty.	Order No.	Type	Qty.	Order No.
16 Digital In; 16 Digital In / 8 Digital Out	SAI-AU M12 BT 16DI	1	1006940000			
16 Digital In / 8 Digital Out				SAI-AU M12 BT 16DI/8DO	1	1006930000
Note						

Technical data

Connections		
Supply voltage (AUX-IN)	1x M12 plug 5-pole, A-coded	2x M12 plug 5-pole, A-coded
Supply voltage (AUX-OUT)	1x M12 female 5-pole, A-coded	
I/O connections	8 x M12 socket 5-pole, A-coded	8 x M12 socket 5-pole, A-coded
Voltage supply		
Operating voltage	24 V DC (18 V DC ... 30 V DC)	24 V DC (18 V DC ... 30 V DC)
Contact load	Per PIN max. 4 A	Per PIN max. 4 A
Digital inputs		
Permitted input voltage	-30 V to +30 V (protected against polarity reversal)	-30 V to +30 V (protected against polarity reversal)
Input current, low	< 15 mA in accordance with EN 61131-2 Type 1	< 15 mA in accordance with EN 61131-2 Type 1
Input current, high	2 mA to 15 mA in accordance with EN 61131-2 Type 1	2 mA to 15 mA in accordance with EN 61131-2 Type 1
Input current, low	< 15 mA in accordance with EN 61131-2 Type 1	< 15 mA in accordance with EN 61131-2 Type 1
Input current, high	2 mA to 15 mA in accordance with EN 61131-2 Type 1	2 mA to 15 mA in accordance with EN 61131-2 Type 1
Input filter	1 ms, 3 ms, 5 ms, 10 ms, Configurable	1 ms, 3 ms, 5 ms, 10 ms, Configurable
Fieldbus		
Bus system	Radio in ISM band	Radio in ISM band
System integration	automatic	automatic
Range of coverage	Max. 100 m (open air), Max. 50 m (industrial surroundings)	Max. 100 m (open air), Max. 50 m (industrial surroundings)
Addressing	Via rotary coding switch	Via rotary coding switch
Communication coexistence	Max. 186 (for 31 wireless gateways each with 6 wireless slaves)	Max. 186 (for 31 wireless gateways each with 6 wireless slaves)
Properties of radio system		
Frequency band / Channel usage	2.401 GHz ... 2.480 GHz / 1 to 79 channels (can be configured)	2.401 GHz ... 2.480 GHz / 1 to 79 channels (can be configured)
Transmit power	0 dBm to 20 dBm / max 100 mW (can be configured)	0 dBm to 20 dBm / max 100 mW (can be configured)
General data		
L x W x H	210 mm / 54 mm / 52 mm	210 mm / 54 mm / 52 mm
Earth	< 400 g	< 400 g
Protection degree	IP 67	IP 67
Operating temperature	0 °C...+60 °C	0 °C...+60 °C
Storage temperature	-25 °C...+85 °C	-25 °C...+85 °C
Housing main material / UL 94 flammability rating	PBT, Pocan / V-0	PBT, Pocan / V-0
Certificate	CE	CE

Note

Wireless slave module for digital and analogue signal processing

Wireless slave

M12

Ordering data

	Type	Qty.	Order No.
4 Analogue In / 2 Analogue Out / 2 Digital In / 2 Digital Out	SAI-AU M12 BT4AI2AO2DIO	1	1006920000
Note			

Technical data

Connections	
Supply voltage (AUX-IN)	1x M12 plug 5-pole, A-coded
Supply voltage (AUX-OUT)	1x M12 female 5-pole, A-coded
I/O connections	8 x M12 socket 5-pole, A-coded
Voltage supply	
Operating voltage	24 V DC (18 V DC ... 30 V DC)
Contact load	Per PIN max. 4 A
Max. total current module	8 A
Digital inputs	
Permitted input voltage	-30 V to +30 V (protected against polarity reversal)
Input current, low	< 15 mA in accordance with EN 61131-2 Type 1
Input current, high	2 mA to 15 mA in accordance with EN 61131-2 Type 1
Input current, low	< 15 mA in accordance with EN 61131-2 Type 1
Input current, high	2 mA to 15 mA in accordance with EN 61131-2 Type 1
Input filter	1 ms, 3 ms, 5 ms, 10 ms, Configurable
Digital outputs	
max. current-carrying capacity per output signal	0.5 A
Switching frequency load (resistive / inductive / inrush)	max. 100 Hz / max. 1 Hz / max. 8 Hz
Short-circuit-proof	Yes, cut-off for short circuit and error message
Output voltage, low / Output voltage, high	0 V DC / Supply voltage less 0.7 V DC
Max. total current outputs	1 A
Analogue inputs	
Measurement range	-10 V ... +10 V, 0 V ... 10V, 0 ... 20 mA, 4...20 mA
Maximum input voltage in relation to GND	35 V
Input resistance (load)	<125 Ohm
Max. input current (differential)	-50 mA to +50 mA (protected against polarity reversal)
Short-circuit-proof	Yes
Resolution / Accuracy	12-bit / < 0.2 %
Analogue outputs	
Measurement range	-10 V ... +10 V, 0 V ... 10V, 0 ... 20 mA, 4...20 mA
Output interval	20 ms to 250 ms (can be configured)
Short-circuit-proof	Yes
Resolution / Accuracy	12-bit / < 0.2 %
Fieldbus	
Bus system	Radio in ISM band
System integration	automatic
Range of coverage	Max. 100 m (open air), Max. 50 m (industrial surroundings)
Addressing	Via rotary coding switch
Communication coexistence	Max. 186 (for 31 wireless gateways each with 6 wireless slaves)
Properties of radio system	
Frequency band / Channel usage	2.401 GHz ... 2.480 GHz / 1 to 79 channels (can be configured)
Transmit power	0 dBm to 20 dBm / max 100 mW (can be configured)
General data	
L x W x H	210 mm / 54 mm / 52 mm
Earth	< 400 g
Protection degree	IP 67
Operating temperature	0 °C...+60 °C
Storage temperature	-25 °C...+85 °C
Housing main material / UL 94 flammability rating	Pocan, PBT / V-0
Certificate	CE

Note

SAI empty housing

SAI empty housing	The Art of Making the Right Choice	G.2
	The advantages at a glance	G.4
	Technical description of individual components	G.5
	Ordering data	G.6
	Technical Information	G.11
	Assembly steps for the SAI Universal Housing Set	G.12
	SAI AU Housing Types	G.13
	Drawings	G.14

The Art of Making the Right Choice

There are numerous types of electronics housings available for the mounting rail with IP 20 protection. This opens up a whole range of options for users. The situation is completely different, however, when working with IP 67. Here the persistent question is how to keep liquids and dusts from penetrating the housing. Many product rely on encapsulation for this protection. When used daily, this is not problematic. But for small batches and for productions where encapsulation is not carried out daily, this technique can present a real obstacle.

Therefore Weidmüller has developed a housing range with absolutely no encapsulation. This also offers the option of using the circuit boards in reflow soldering since the required M12s are available as tray-packaged THT parts.

In the event of problems with the electronic circuitry after assembly, the housing can be re-opened to search for possible causes on the PCB.

The modules are only 54 mm wide and are normally supplied with 8 x M12 connectors along one side. On the bus and supply sides 4 connectors may be fitted. Both areas are separated with a transparent cover which allows settings to be made after they have been assembled.

It is worth highlighting the M12 Reflow-capable PCB plug-in connectors, which can be used in a sustained operating temperature of 105 °C. These are also available individually for use in an individually designed housing application.

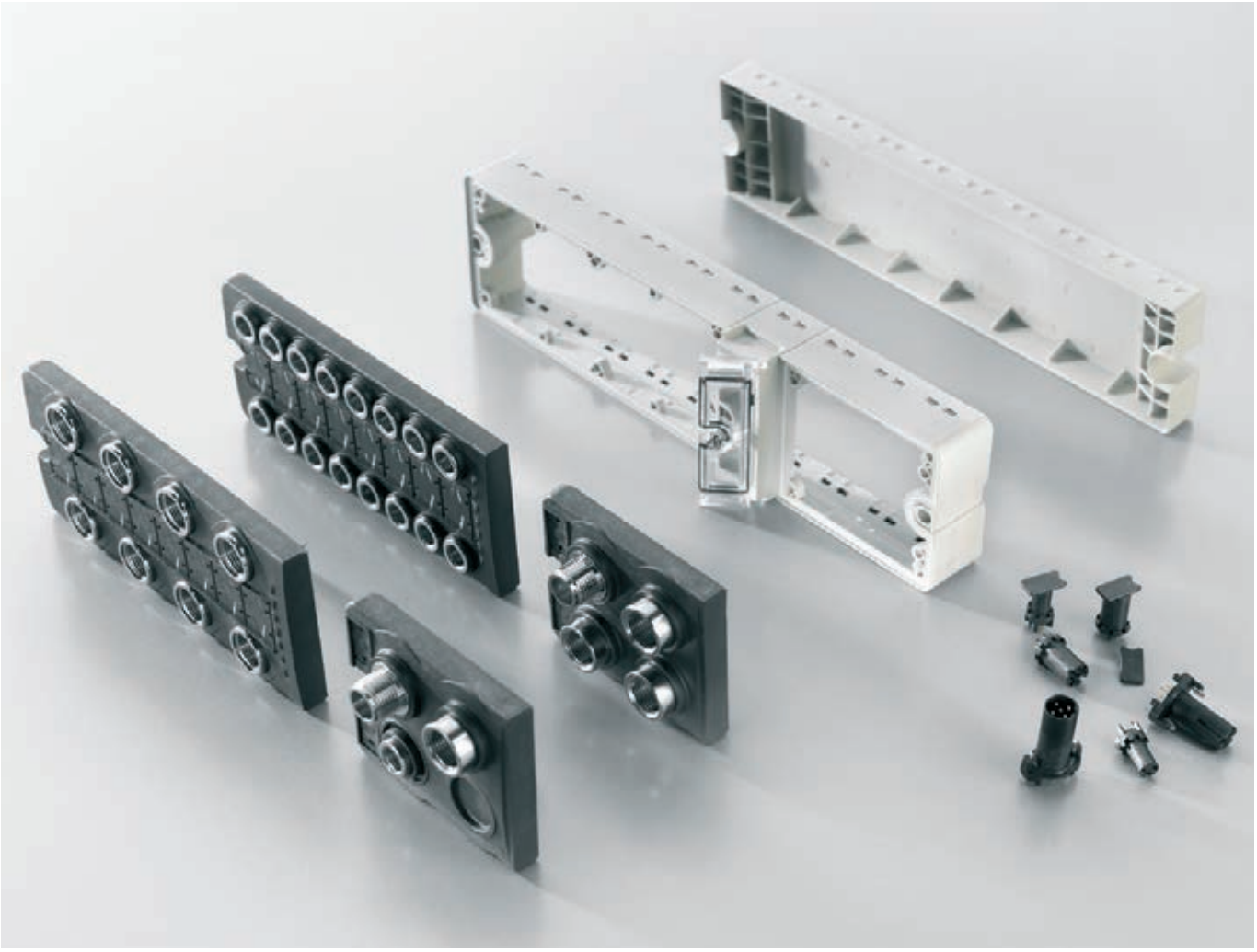

Another variant consists of a small housing with two M12 connectors. Here small switches can be integrated easily to adapt to existing levels and the M12 connectors are already included. The housing is packed as a set with 100 pieces. The price refers to a set with 100 equal parts.

If these housing solutions do not offer a viable solution for the required application, Weidmüller may offer a customised housing. With our years of experience, we can even offer an affordable solution for low volume orders. How is this achieved? Please feel free to ask!

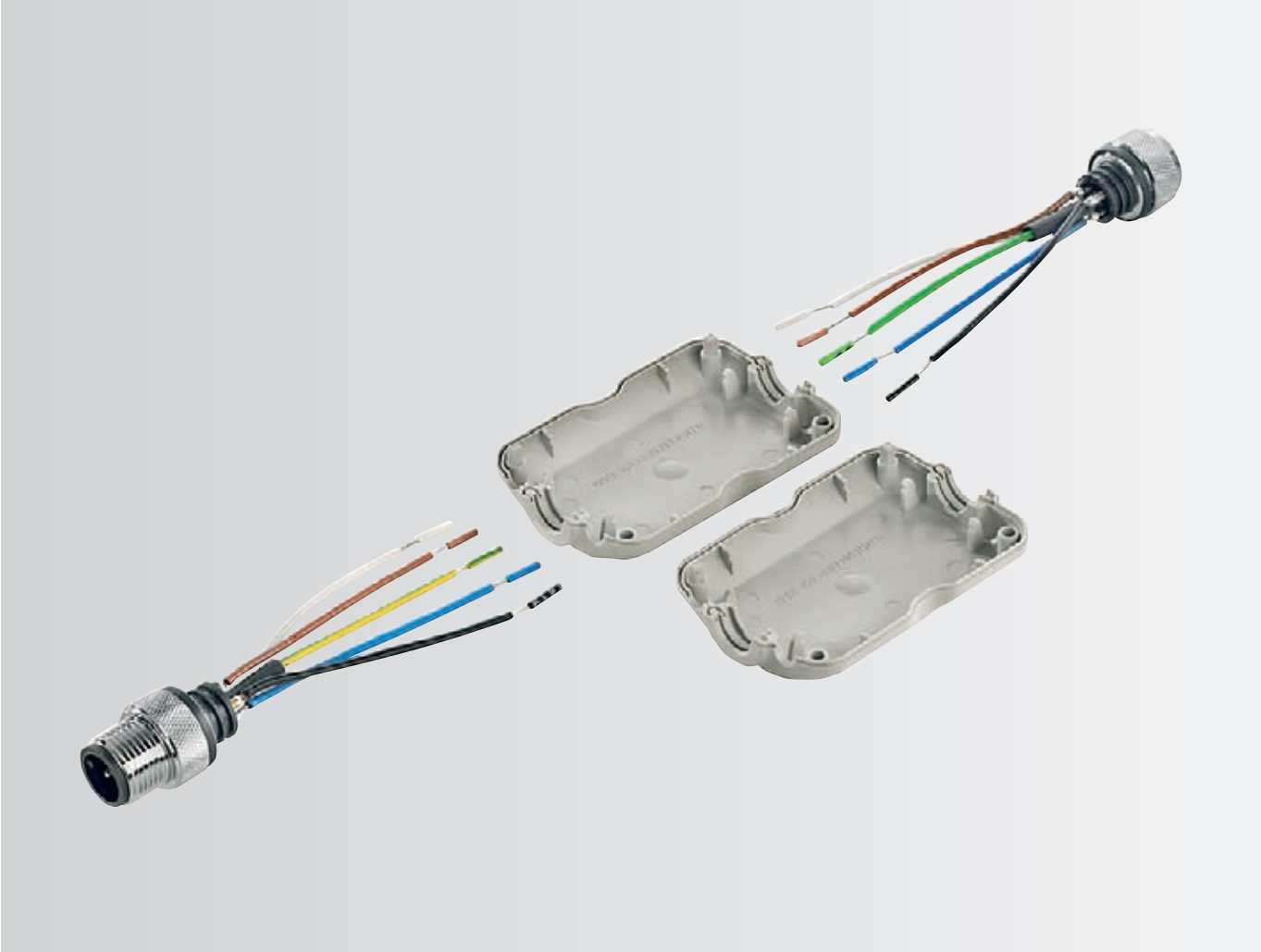

Technical and ordering data can be found, starting on page G.13.

The advantages at a glance

Non-encapsulated housing
- Easy to assemble
- No encapsulation equipment needed
- Recyclable
- Disassembly for testing is possible

M8/M12 connector
- Reflow-compatible I/O plug-in connector
- High long-term-use temperature
- I/O plug in tray
- M12 available with different coding

Material
- Housing material laser-compatible PBT. This material is very resistant and sturdy.
- Threaded rings: nickel-plated brass – for secure attachment
- Machined, gold-plated contact – for high current capacity

Service
- Housings can also be ordered as a set
- They can be laser-inscribed before delivery

Components
- M12 and M8 connectors can also be ordered individually for use in your custom-designed housings

Housings
- Light-guide rods are integrated into cover
- Mounting holes on top and side
- Address chamber can be illuminated
- Housings available in black or grey

Technical description of individual components

It is possible to assemble three different housing types together. These variants have different widths and lengths.
The first housing is 54 mm wide and 210.5 mm long. The second and third housing is always 30 mm wide and 155.5 mm or 180.5 mm long.

The following individual components are always required:

54 mm

Designation
One frame
One base
One I/O cover
One bus/supply cover
One Functional Earth plate
One address cover
One address cover screw
Ten circuit board screws

30 mm short shape

Designation
One frame
One base
One cover
One Functional Earth plate
Six circuit board screws

30 mm long shape

Designation
One frame
One base
One cover
One Functional Earth plate
Six circuit board screws

Added to this is the corresponding number of plug-in connector inserts. The quantity should be coordinated with the respective covers - with the I/O covers each requires different M12 plug-in connectors.

SAI empty housing

Ordering data

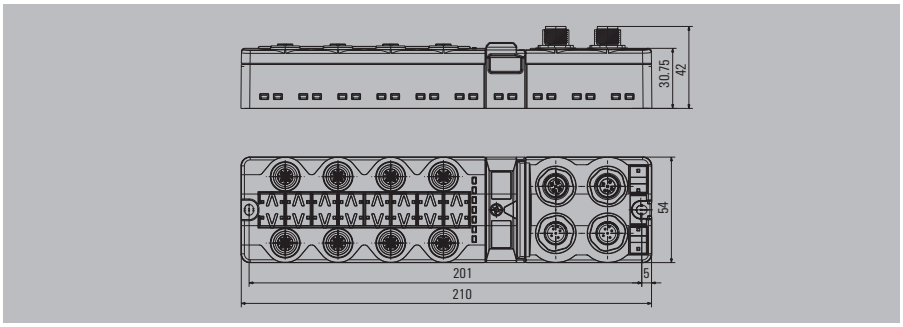

54 mm

I/O cover

With threaded bushing, without connector

Designation	Type	Qty.	Order No.
M12	SAI GHDE EA 8M12	25	1246490000
M12 shielded	SAI GHDE EA 8M12 SIBL	25	1246510000
M8	SAI GHDE EA 16M8 0.SIBL	25	1246520000

Frame, address flap, screw for address flap, floor, shield panel

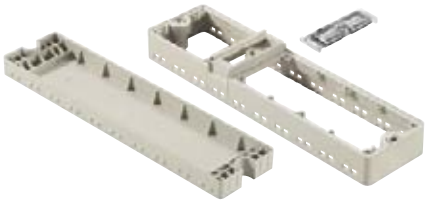

Designation	Type	Qty.	Order No.
M12 shielded	SAI RA 54 KU	25	1246530000
Address cover	SAI AD 54	50	1966170000
Screw for address cover	SAI BFSC M3x10	1	4310920000
Base	SAI BP 54 KU	50	1966190000
Functional earth plate	SAI SIBL GH	250	1966200000

LP screws

Designation	Type	Qty.	Order No.
Screw for attachment to circuit board	PTSC 25X12 WN5452	100	4311430000

bus/supply cover, short

With threaded bushing, without connector

Designation	Type	Qty.	Order No.
4 M12, 1 male, 3 female	SAI GHDE 4M12 1S3B	25	1246560000

You can find all variants on G.8

O-rings for female sockets

Designation	Type	Qty.	Order No.
M12	SAI O-RI 7.5X1.5 VI	5000	4311000000
M8	SAI O-RI 5.0X0.8 NBR	50000	4312340000

M12 plug I/O

Packaged in tray / reflow compatible

Designation	Type	Qty.	Order No.
Female A-Keyway 5 pole	B KOTR M12 5P A BU SAI	360	2326170000
Female D-Keyway 4 pole	B KOTR M12 4P D BU SAI	360	2341480000

Ordering data

M8 plug I/O

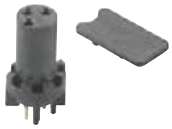

Designation	Type	Qty.	Order No.
Female M8 3 pole	B KOTR M8 3P BU SAI	360	**2332380000**

M12 plug, bus/supply side, short

Designation	Type	Qty.	Order No.
Female A-Keyway 5 pole shielded	B KOTR B M12 5POL A BU	220	**2350600000**
Male A-Keyway 5 pole shielded	B KOTR B M12 5POL A SF	220	**2350610000**
Female B-Keyway 5 pole shielded	B KOTR B M12 5POL B BU	220	**2350620000**
Male B-Keyway 5 pole shielded	B KOTR B M12 5POL B SF	220	**2350630000**
Female D-Keyway 4 pole shielded	B KOTR B M12 4POL D BU	220	**2350590000**

M8 plug, bus/supply side, short

Designation	Type	Qty.	Order No.
Female 4 poles shielded	B KOTR BUS M8 4POL BU	220	**2350640000**

Threaded bushings

Designation	Type	Qty.	Order No.
Male M12	GWHUE BUS M12 SF SAI	1	**4322760000**
Female M12	GWHUE BUS M12 BU SAI	1	**4322750000**

SET

Designation	Type	Qty.	Order No.
M12 standard	SAI-AU ET SET M12 A COD	1	**1235340000**

G

SAI empty housing

Ordering data

I/O cover (3M12 | 2 pin, 1 socket // 1M8 | 1 socket)

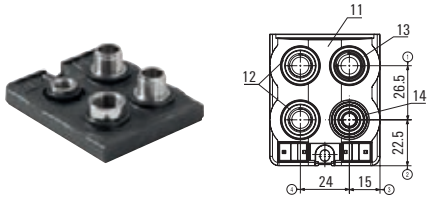

Type	Qty.	Order No.
SAI GHDE 3M12 1M8 SAI	25	1246540000

I/O cover (3M12 | 1 pin, 2 socket)

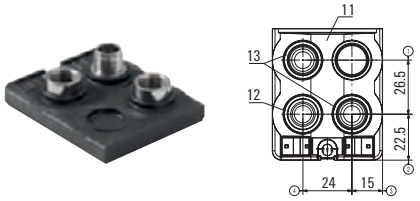

Designation	Qty.	Order No.
SAI GHDE 3M12 1S2B	25	1246550000

LP I/O cover (4M12 | 2 pin, 2 socket)

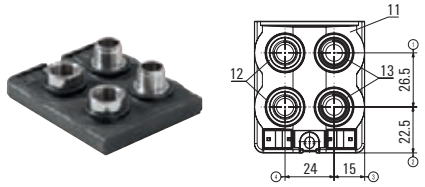

Designation	Qty.	Order No.
SAI GHDE 4M12 2S2B	25	1246570000

I/O cover (4M12 | 2 pin, 2 socket, turned)

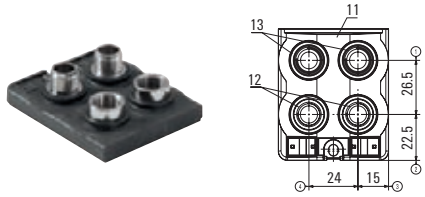

Designation	Qty.	Order No.
SAI GHDE 4M12 2X1S1B	25	1246580000

I/O cover (4M12 | 3 pin, 1 socket)

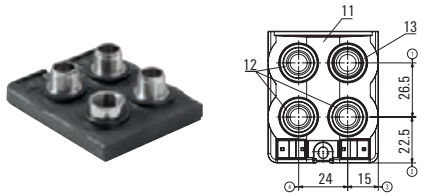

Designation	Qty.	Order No.
SAI GHDE 4M12 3S1B	25	1246590000

I/O cover (4M12 | 1 pin, 3 socket)

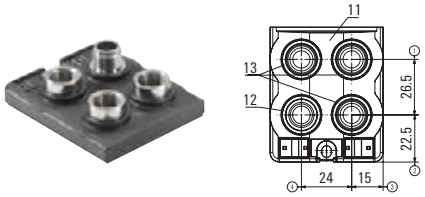

Designation	Qty.	Order No.
SAI GHDE 4M12 1S3B	25	1246560000

Ordering data

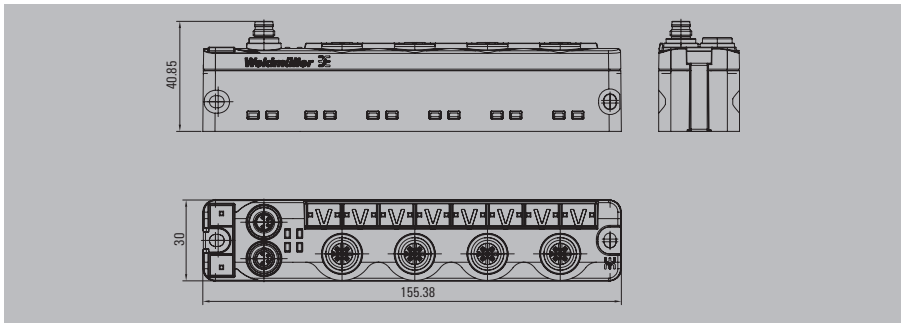

30 mm short version

Cover

With threaded bushing, without connector

Designation	Type	Qty.	Order No.
M12	SAI GHDE 30 S KU M12	20	1246810000
M12 shielded	SAI GHDE 30 S KU SI	20	1246820000
M8	SAI GHDE 30 S KU M8	20	1246830000

Frame, floor

Designation	Type	Qty.	Order No.
Frame	SAI RA 30 SB KU	20	1246660000
Base	SAI BP 30 SB KU	20	1246840000

LP screws

Designation	Type	Qty.	Order No.
Screw for attachment to circuit board	PTSC 25X12 WN5452	100	4311430000

O-rings for female socket

Designation	Type	Qty.	Order No.
M12	SAI O-RI 7.5X1.5 VI	5000	4311000000
M8	SAI O-RI 5.0X0.8 NBR	50000	4312340000

M12 plug I/O

Designation	Type	Qty.	Order No.
Female A-Keyway 5 pole	B KOTR M12 5P A BU SAI	360	2326170000
Female D-Keyway 4 pole	B KOTR M12 4P D BU SAI	360	2341480000

bus/supply plug

Designation	Type	Qty.	Order No.
Female M8 4 pole	B KOTR BUS M8 4POL BU	220	2350640000
Male M8 4 pole	B KOTR BUS M8 4POL SF	220	2350650000

G

SAI empty housing

Ordering data

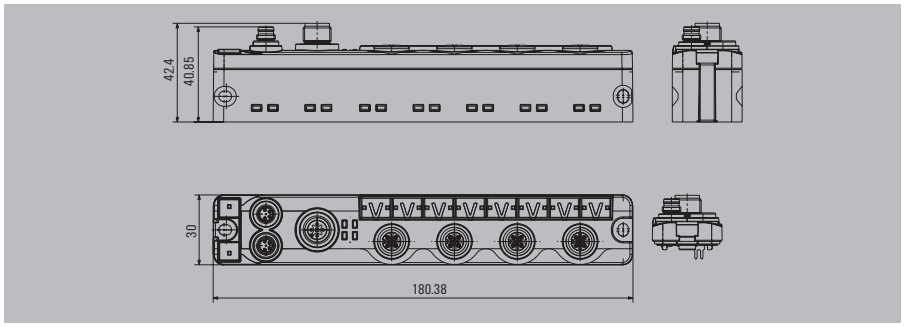

30 mm long version

Cover

With threaded bushing, without connector

Designation	Type	Qty.	Order No.
M12	SAI GHDE 30 SB LA M12	20	1246670000
M12 shielded	SAI GHDE 30 SB LA SIBL	20	1246680000
M8	SAI GHDE 30 SB LA M8	20	1246690000

Frame, floor

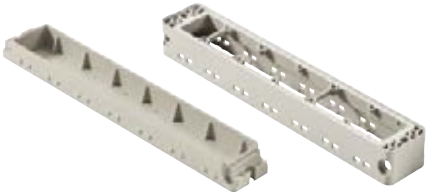

Designation	Type	Qty.	Order No.
Frame	SAI RA 30 SB LA	20	1246720000
Base	SAI BP 30 SB LA	20	1246710000

LP screws

Designation	Type	Qty.	Order No.
Screw for attachment to circuit board	PTSC 25X12 WN5452	100	4311430000

O-rings for female socket

Designation	Type	Qty.	Order No.
M12	SAI O-RI 7.5X1.5 VI	5000	4311000000
M8	SAI O-RI 5.0X0.8 NBR	50000	4312340000

M12 plug I/O

Designation	Type	Qty.	Order No.
Female A-Keyway 5 pole	B KOTR M12 5P A BU SAI	360	2326170000
Female D-Keyway 4 pole	B KOTR M12 4P D BU SAI	360	2341480000

bus/supply plug

Designation	Type	Qty.	Order No.
Female M8 4 pole	B KOTR BUS M8 4POL BU	220	2350640000
Male M8 4 pole	B KOTR BUS M8 4POL SF	220	2350650000
Male M12 A-Keyway 5 pole	B KOTR B M12 5POL A SF	220	2350610000

Technical Information

O-rings
These are required for the M12 and M8 sockets when establishing a seal in compliance with IP 67. O-rings are required for the female sockets but not for the male plugs.

Press
You will need a tool that can press the base in and close the housing without damaging it. Such a tool can be ordered through Weidmüller.

Cover
The covers are fitted with either M12 or M8 threaded nuts. The corresponding inserts must be ordered separately.

Connectors in tray
The I/O inserts are packaged and delivered in a tray. This makes them compatible with automatic placement processes.
All connector inserts offered in this product line can be reflow soldered.
The bus/supply inserts connectors are packaged and delivered in a box. They can also be reflow soldered.

Circuit board screws
The circuit board screws are self-cutting screws. Be sure, during assembly, to tighten the screws in the specified order. Ten screws are needed for each circuit board in the 54 mm housings. Six screws are needed per board in the 30 mm housings.

Sample housings
The Set article number can be used to order a 54 mm housing along with sufficient components for building a complete module. This is suitable for samples or small batches. A set consists of the following components:
One I/O cover, bus/supply cover, address cover, screw for address cover, Functional Earth plate, frame, base, eight M12 A-Keyway female sockets, 10 M12 O-rings, two M12 A-Keyway female sockets, two M12 male A-Keyway as bus/supply plug.

Colour
Housing parts can be ordered in either grey or black. The article numbers here specify the grey frame, grey base and black cover.

Print
Customised printing is also possible on request. The inscription is made with a laser.

Assembly steps for the SAI Universal Housing Set

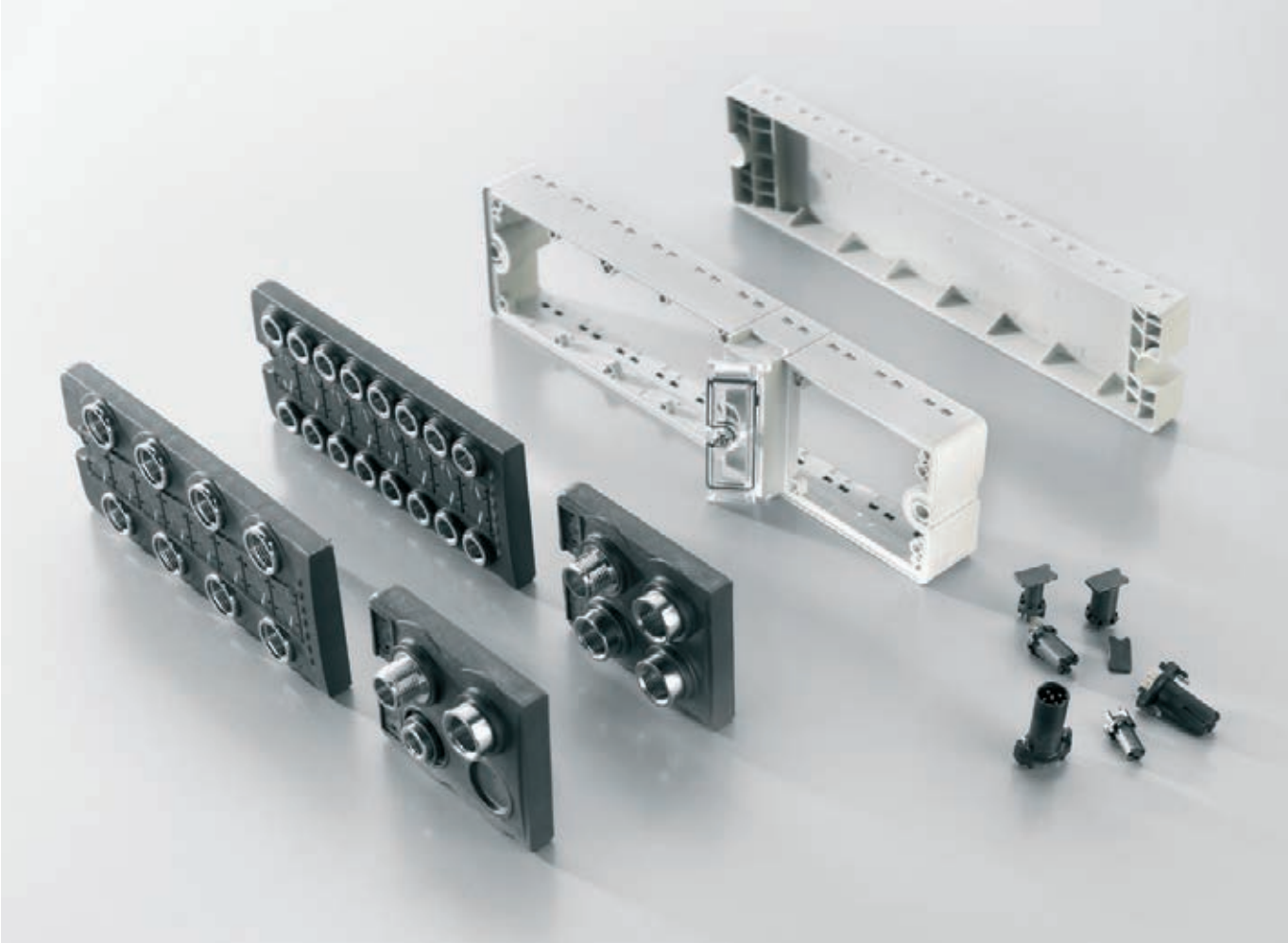

❶ Assemsling the frames and covers

Assembly steps
Position the frame with I/O cover and the bus/supply cover in the holder. Snap the printed circuit board in the frame and screw it together with housing **(be sure to maintain the proper torque and tightening sequence).**

Screw torque: 0.6 Nm

Tightening sequence

5	3	1	7		9
	EA			Bus	
6	4	2	8		10

❷ Snap in the housing base

Assembly steps
Use a press to snap the housing base into the housing frame.

❸ Final assembly

Assembly steps
1. Snap on the transparent cover
2. Screw on with 0.5 Nm torque
3. Attach the O-rings with a press
4. Snap on the Functional Earth plate
5. Add accessories (Multicard, protective caps, package inserts)

SAI AU Housing Types

SAI empty housing

Type	Designation 54 mm	Order No.	Type	Qty.
I/O cover	M12	1246490000	SAI GHDE EA 8M12	25
	M12 shielded	1246510000	SAI GHDE EA 8M12 SIBL	25
	M8	1246520000	SAI GHDE EA 16M8 O.SIBL	25
Frame set	Frame, address cover, screw for address cover, base			
	Frame	1246530000	SAI RA 54 KU	25
	Address cover	1966170000	SAI AD 54	50
	Corresponding screw	4310920000	SAI BFSC M3x10	1
	Base	1966190000	SAI BP 54 KU	50
	Functional Earth Plate	1966200000	SAI SIBL GH	250
PCB screws		1966180000	SAI BFSC M3x10	1000
Bus/supply cover	3 M12, 1 M8	1246540000	SAI GHDE 3M12 1M8 SAI	25
	3 M12 1 male, 2 female	1246550000	SAI GHDE 3M12 1S2B	25
	4 M12, 1 male 3 female	1246560000	SAI GHDE 4M12 1S3B	25
	4 M12, 2 male, 2 female	1246570000	SAI GHDE 4M12 2S2B	25
	4 M12 2X 1 male, 1 female	1246580000	SAI GHDE 4M12 2X1S1B	25
	4 M12 3 male, 1 female	1246590000	SAI GHDE 4M12 3S1B	25
	3 M12 1 PG9	1246610000	SAI GHDE 3M12 1PG9	25
O rings	M12	4311000000	SAI O-RI 7.5X1.5 VI	5000
	M8	4312340000	SAI O-RI 5.0X0.8 NBR	50000
M12 connector I/O	Female A-Keyway 5 pole	2326170000	B KOTR M12 5P A BU SAI	360
	Female D-Keyway 4 pole	2341480000	B KOTR M12 4P D BU SAI	360
M8 connector I/O		2332380000	B KOTR M8 3P BU SAI	360
M12 connector, bus/supply cover side	Female A-Keyway 5 pole	2350600000	B KOTR B M12 5POL A BU	220
	Male A-Keyway 5 pole	2350610000	B KOTR B M12 5POL A SF	220
	Female B-Keyway 5 pole shielded	2350620000	B KOTR B M12 5POL B BU	220
	Male B-Keyway 5 pole shielded	2350630000	B KOTR B M12 5POL B SF	220
	Female D-Keyway 4 pole shielded	2350590000	B KOTR B M12 4POL D BU	220
M8 connector	Female 4 pole shielded	2350640000	B KOTR BUS M8 4POL BU	220
SET	M12 standard	1235340000	SAI-AU ET SET M12 A COD	
Type	**30 mm short**	**Order No.**	**Type**	**Qty.**
Cover	M12	1246810000	SAI GHDE 30 S KU M12	20
	M12 shield	1246820000	SAI GHDE 30 S KU SI	20
	M8	1246830000	SAI GHDE 30 S KU M8	20
Frame set	Base	1246840000	SAI BP 30 SB KU	20
	Frame	1246660000	SAI RA 30 SB KU	20
PCB screws		1966180000	SAI BFSC M3x10	1000
O rings	M12	4311000000	SAI O-RI 7.5X1.5 VI	5000
	M8	4312340000	SAI O-RI 5.0X0.8 NBR	50000
M12 connector I/O	Female A-Keyway 5 pole	2326170000	B KOTR M12 5P A BU SAI	360
	Female D-Keyway 4 pole	2341480000	B KOTR M12 4P D BU SAI	360
	Female M8 4 pole	2350640000	B KOTR BUS M8 4POL BU	220
	Male M8 4 pole	2350650000	B KOTR BUS M8 4POL SF	220
Type	**30 mm long**	**Order No.**	**Type**	**Qty.**
Cover	M12	1246670000	SAI GHDE 30 SB LA M12	20
	M12 shielded	1246680000	SAI GHDE 30 SB LA SIBL	20
	M8	1246690000	SAI GHDE 30 SB LA M8	20
Frame set	Base	1246710000	SAI BP 30 SB LA	20
	Frame	1246720000	SAI RA 30 SB LA	20
PCB screws		1966180000	SAI BFSC M3x10	1000
O rings	M12	4311000000	SAI O-RI 7.5X1.5 VI	5000
	M8	4312340000	SAI O-RI 5.0X0.8 NBR	50000
M12 connector I/O	Female A-Keyway 4 pole			
	Female A-Keyway 5 pole	2326170000	B KOTR M12 5P A BU SAI	360
	Female D-Keyway 4 pole	2341480000	B KOTR M12 4P D BU SAI	360
	Female M8 4 pole	2350640000	B KOTR BUS M8 4POL BU	220
	Male M8 4 pole	2350650000	B KOTR BUS M8 4POL SF	220
	Male M12 A-Keyway 5 pole	2350610000	B KOTR B M12 5POL A SF	220

I/O connector, plug M12

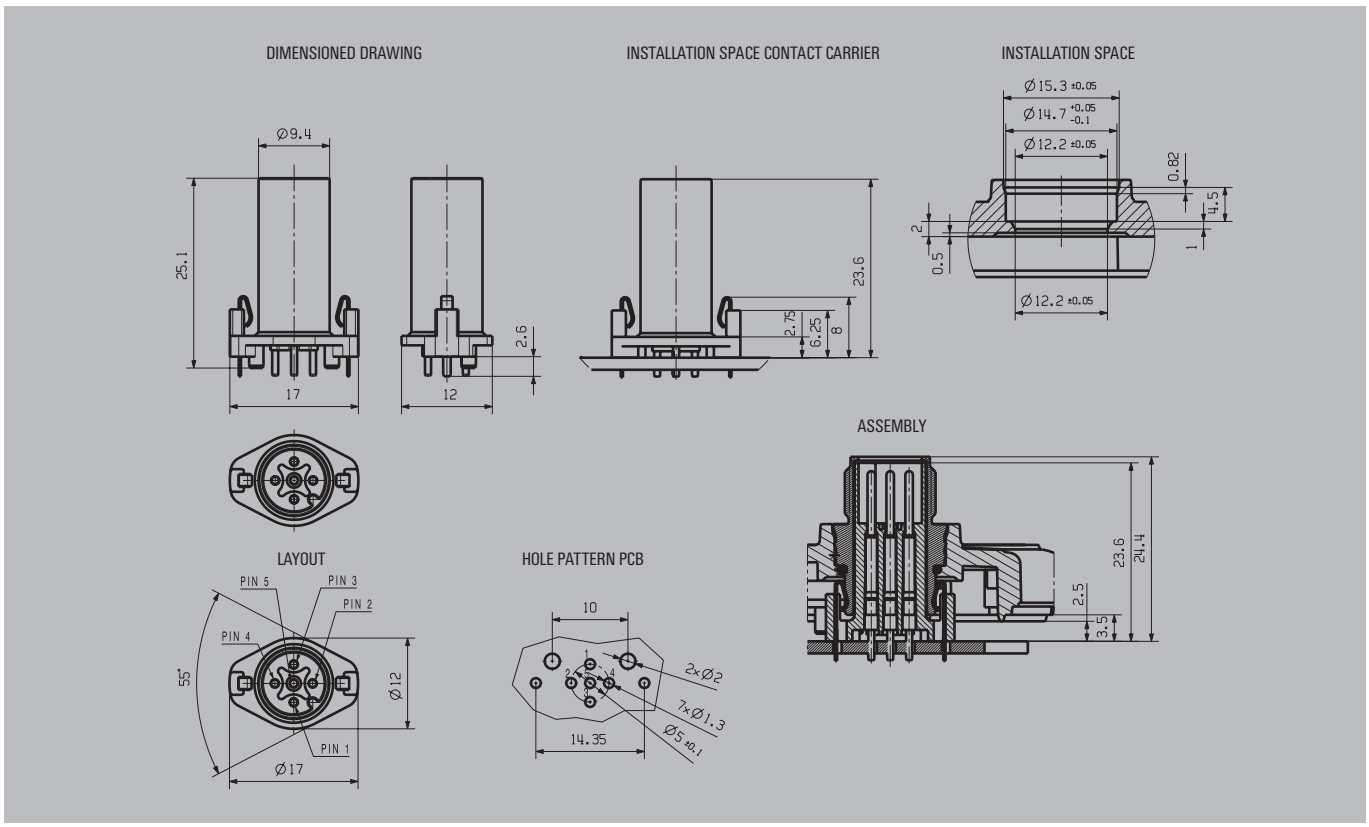

I/O plug socket M12

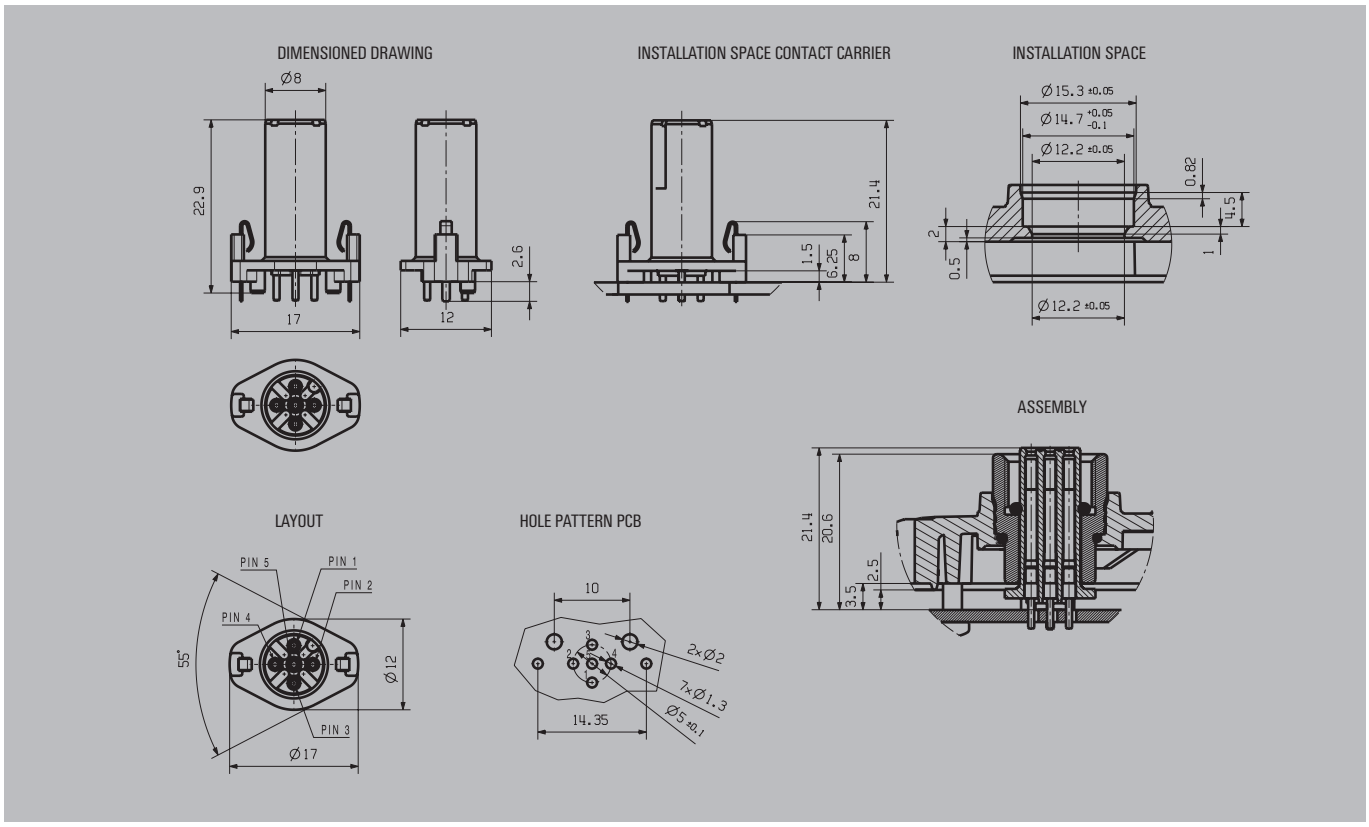

I/O plug pin M8

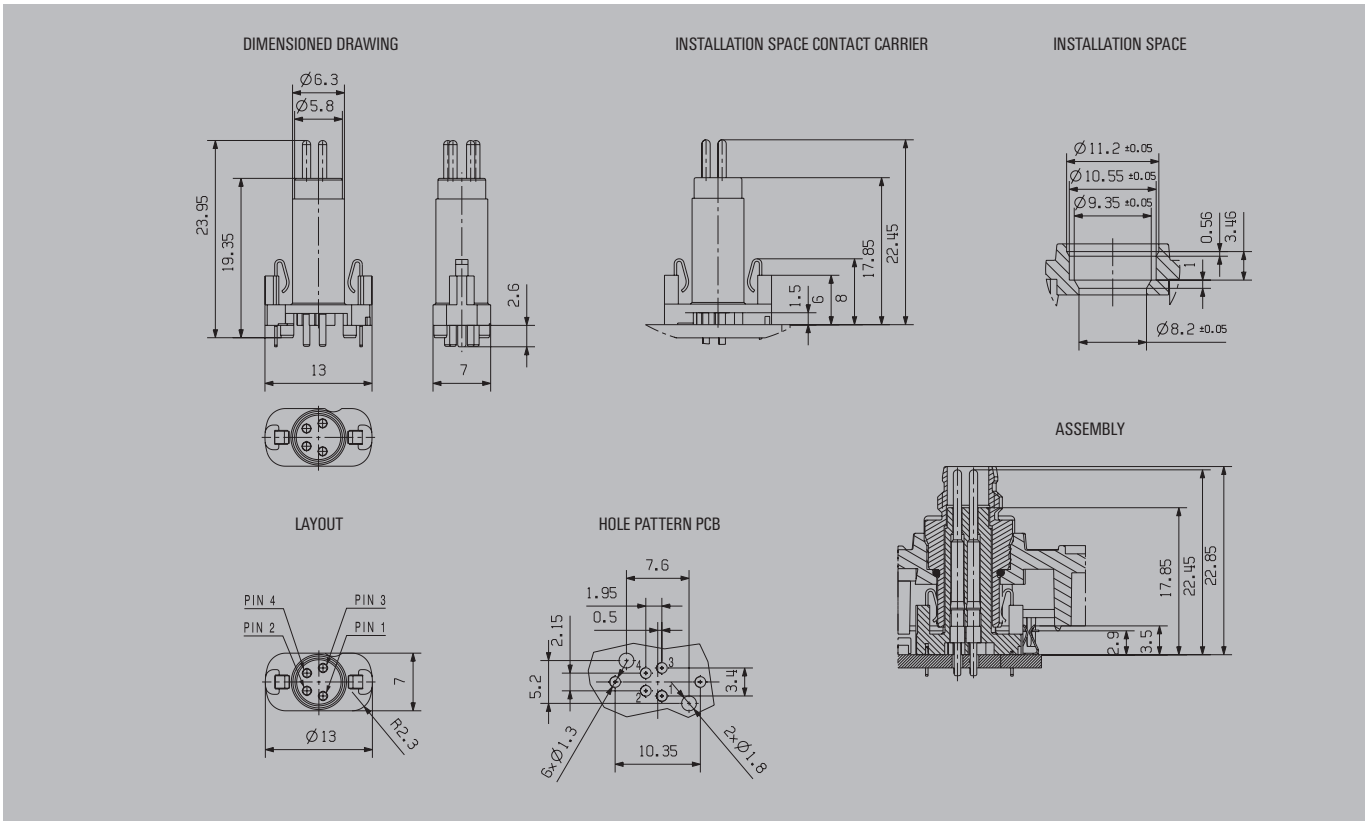

I/O plug socket M8

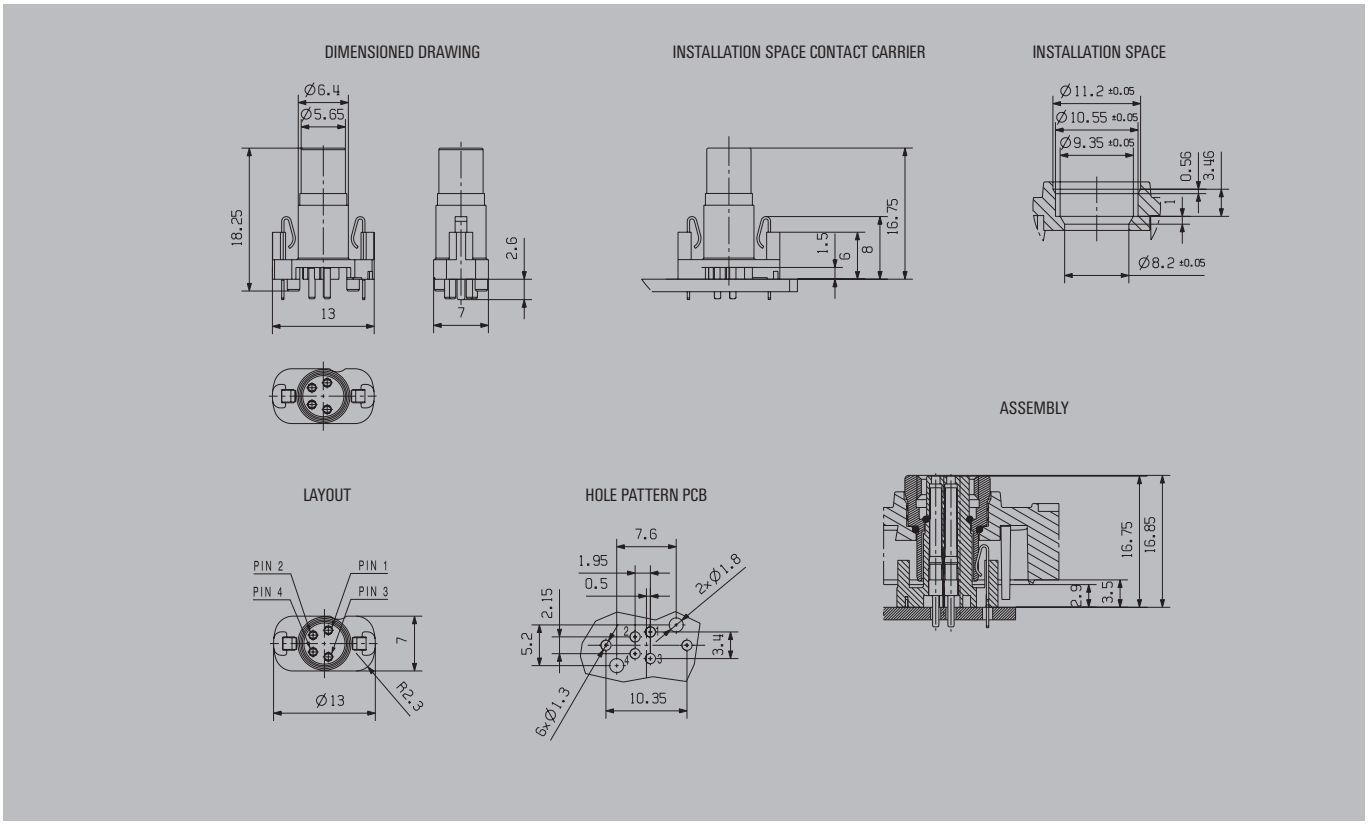

E/A plug socket M12

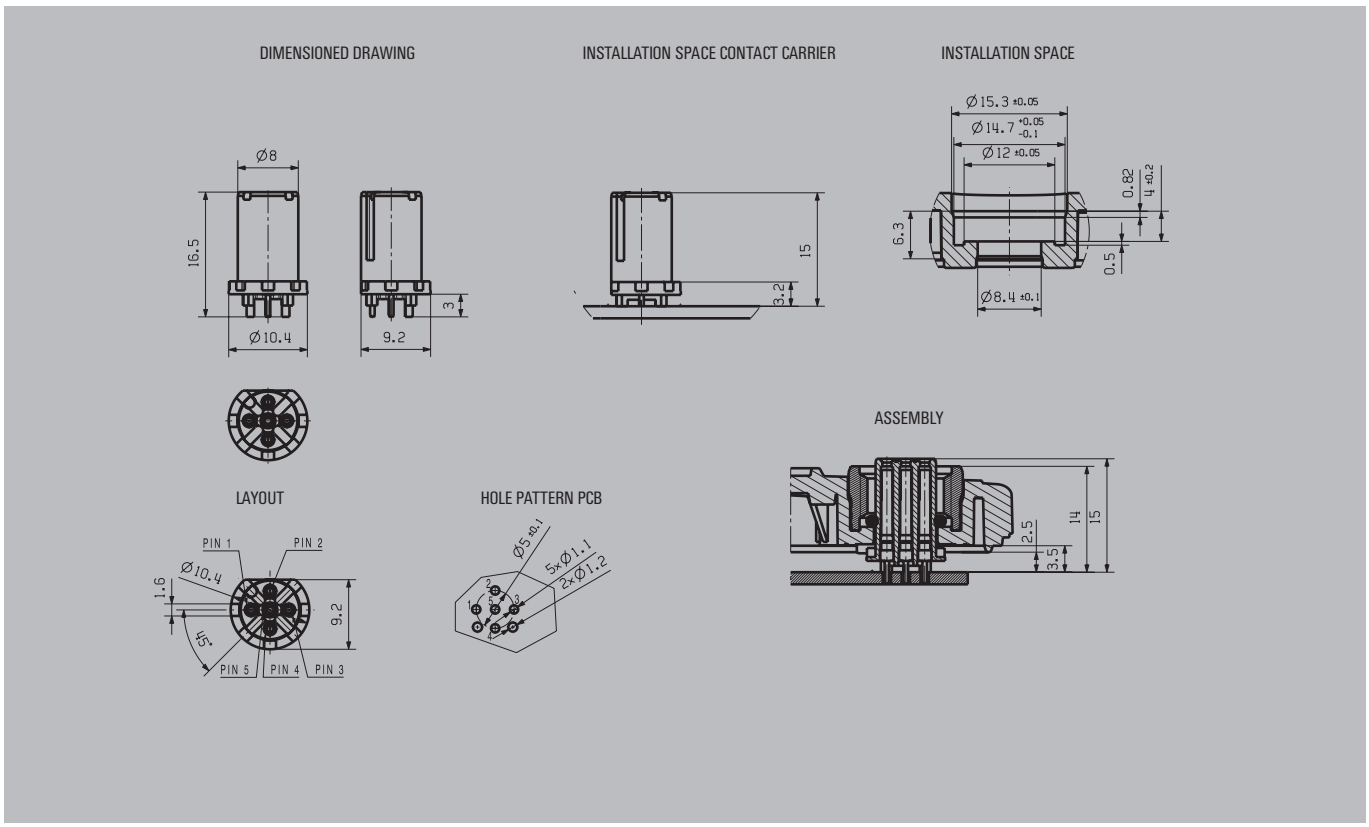

E/A plug socket M8

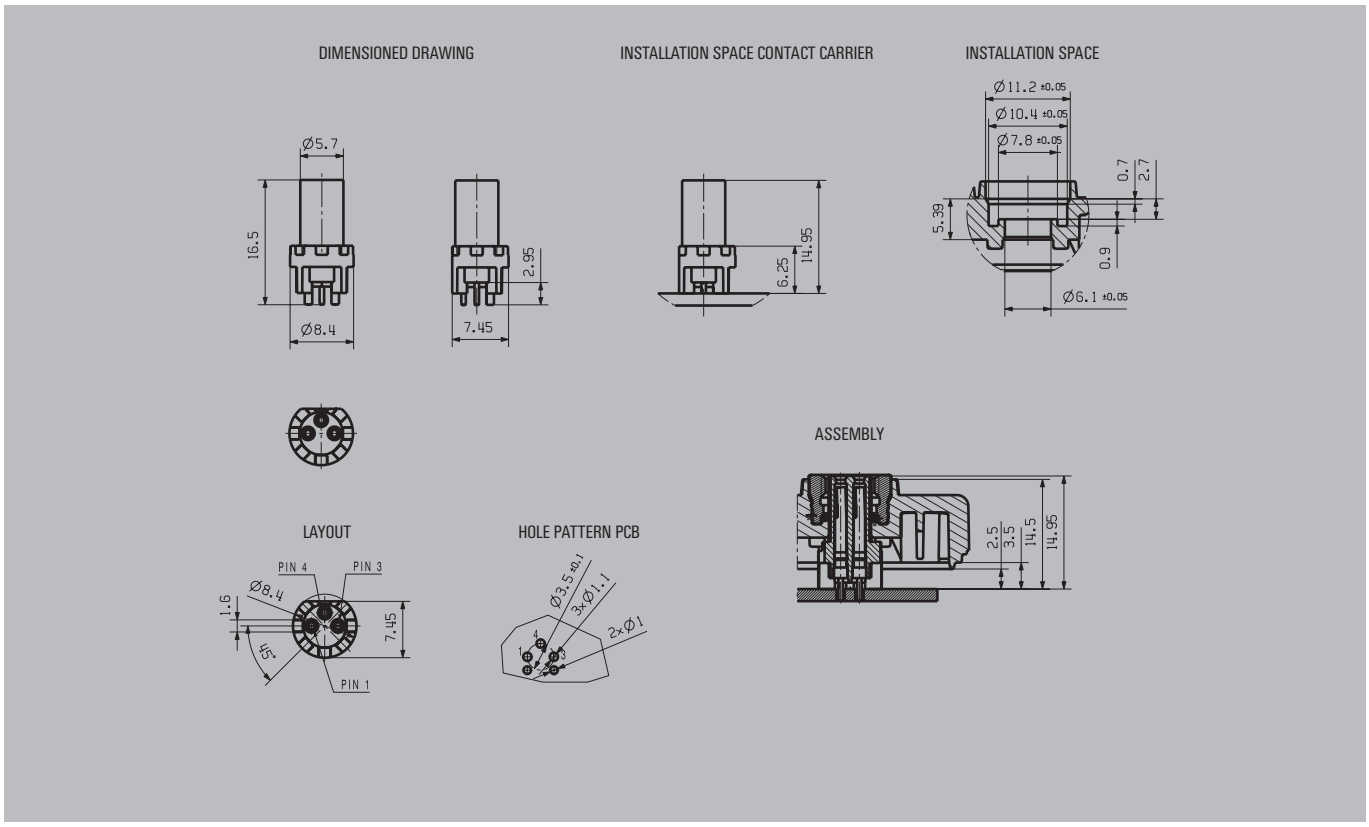

30 mm housing, long

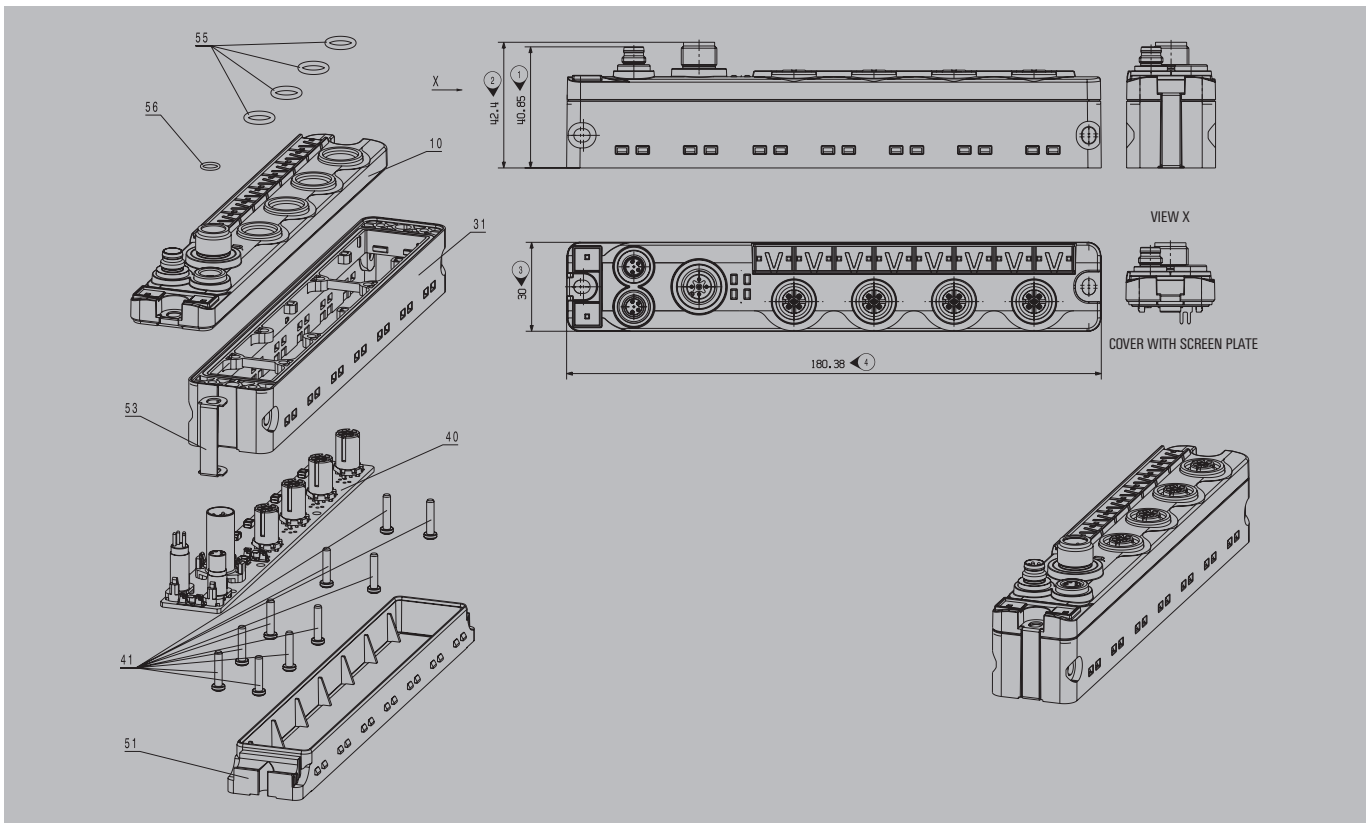

30 mm housing, short

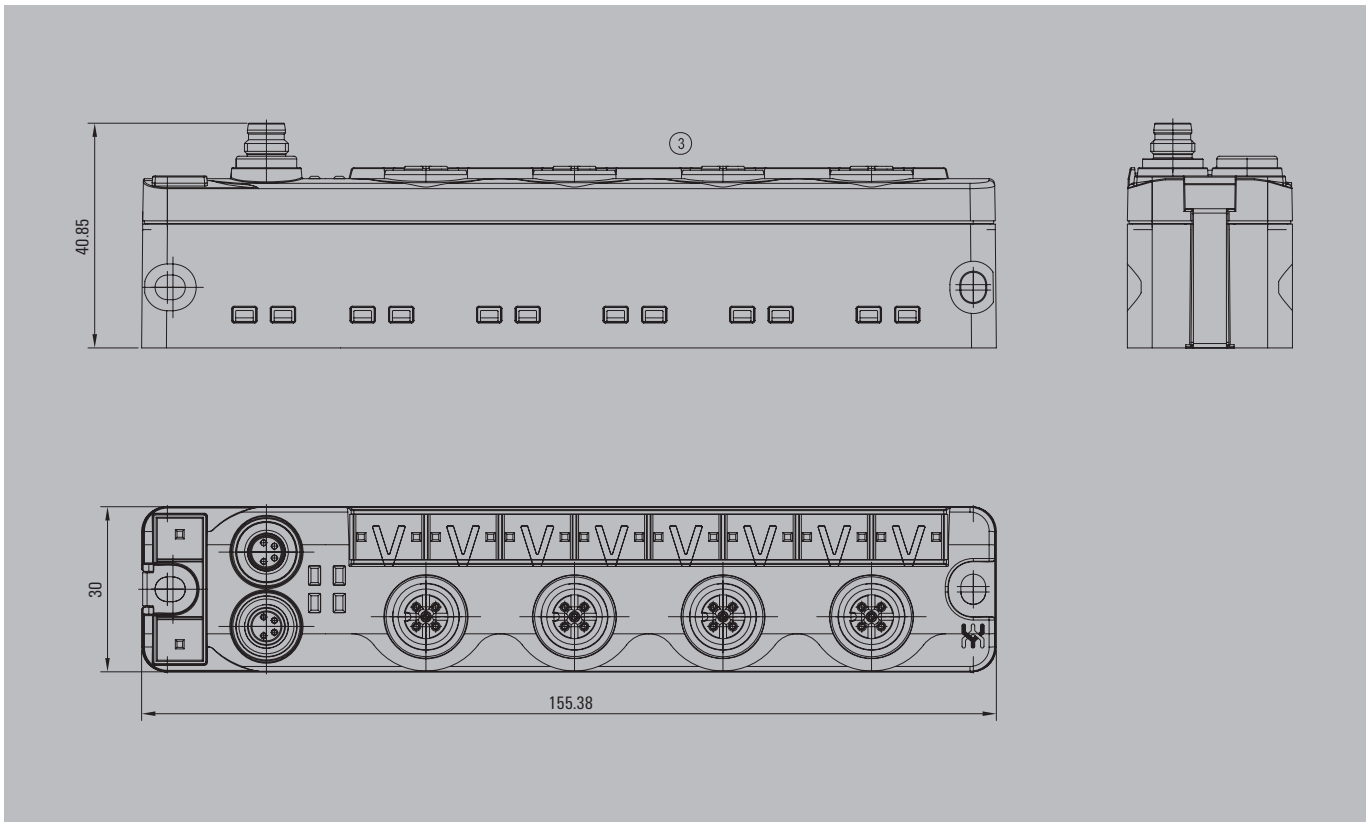

Free space 30 mm housing long with M12

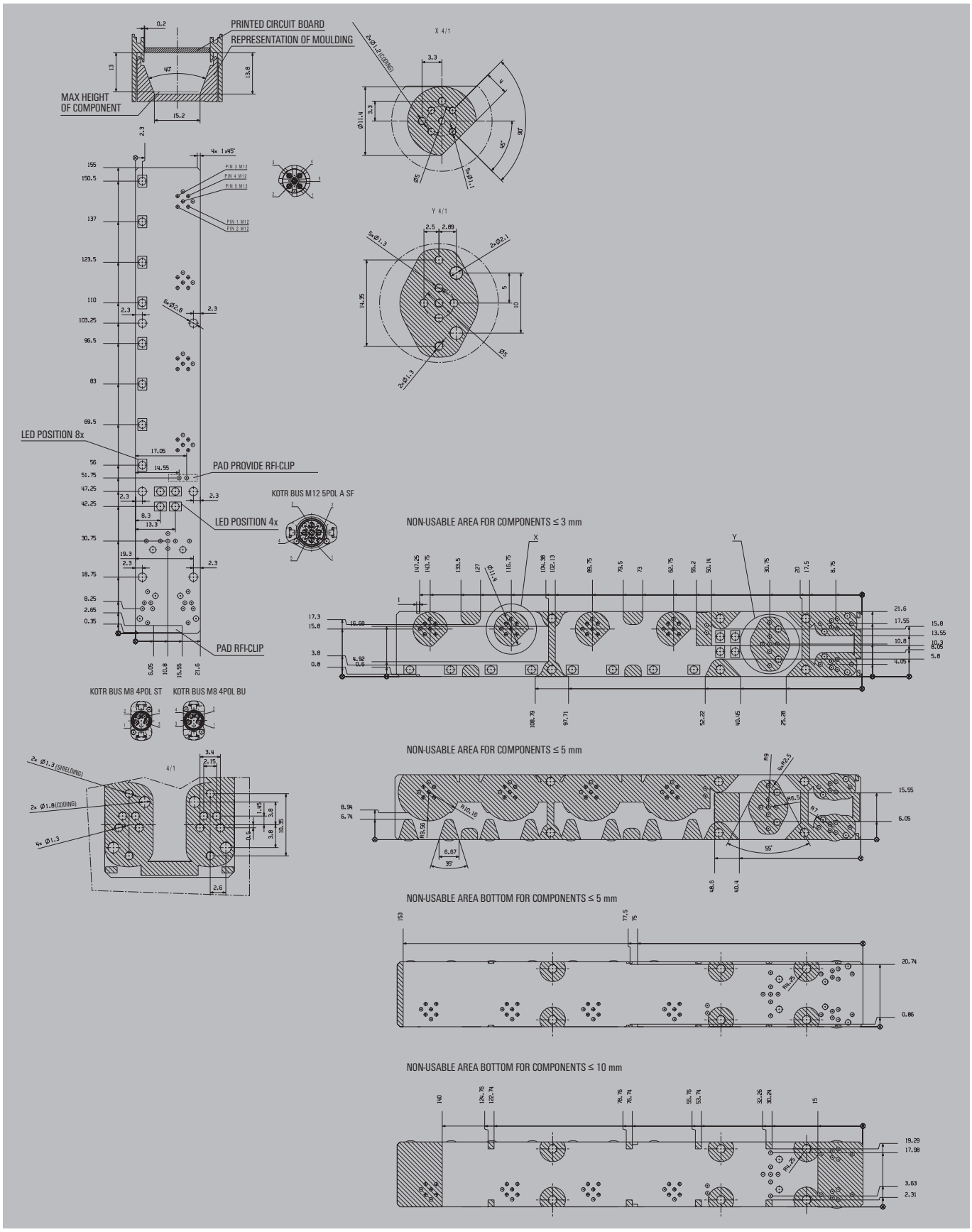

Free space 30 mm housing long with M8

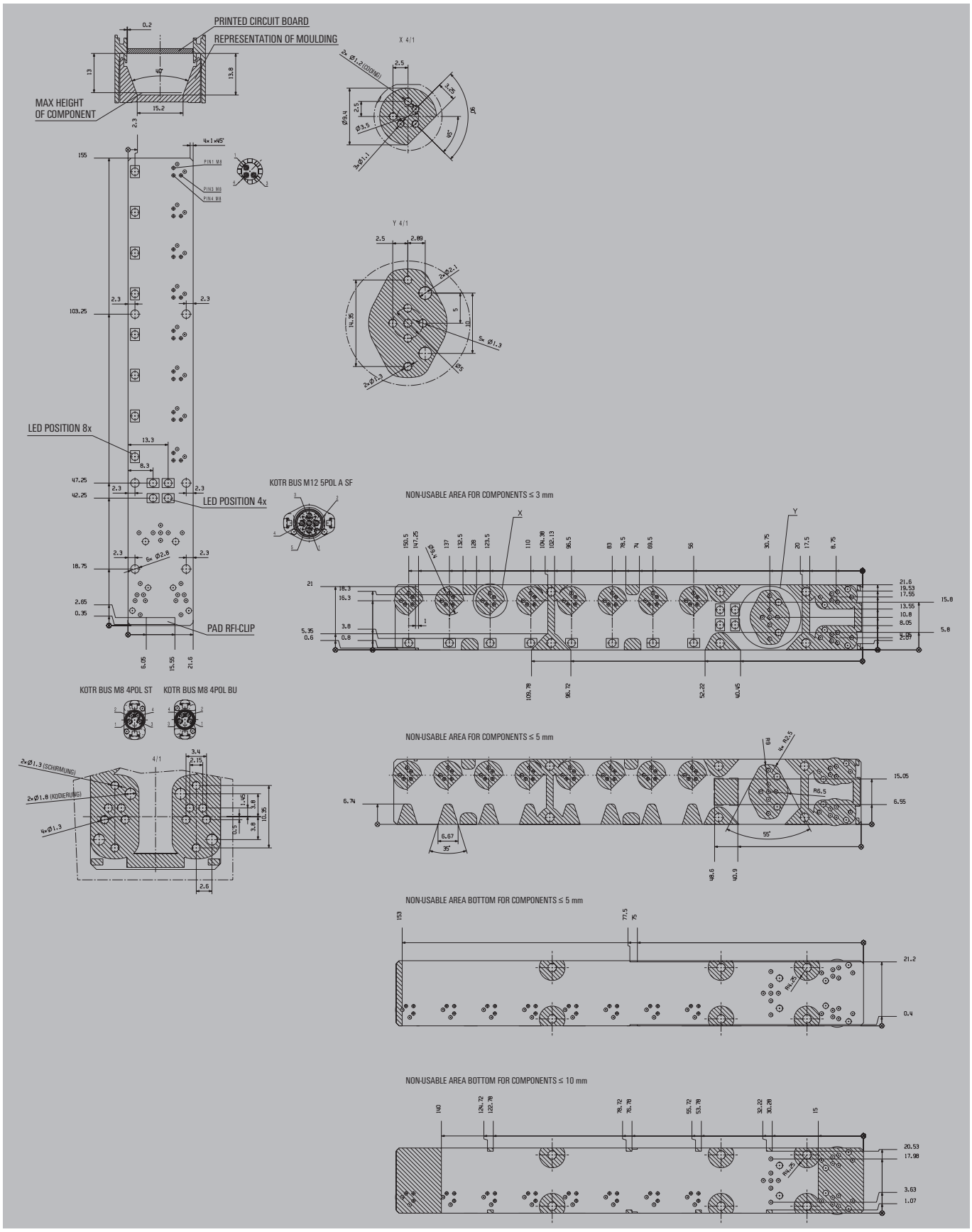

Free space 30 mm housing short with M8

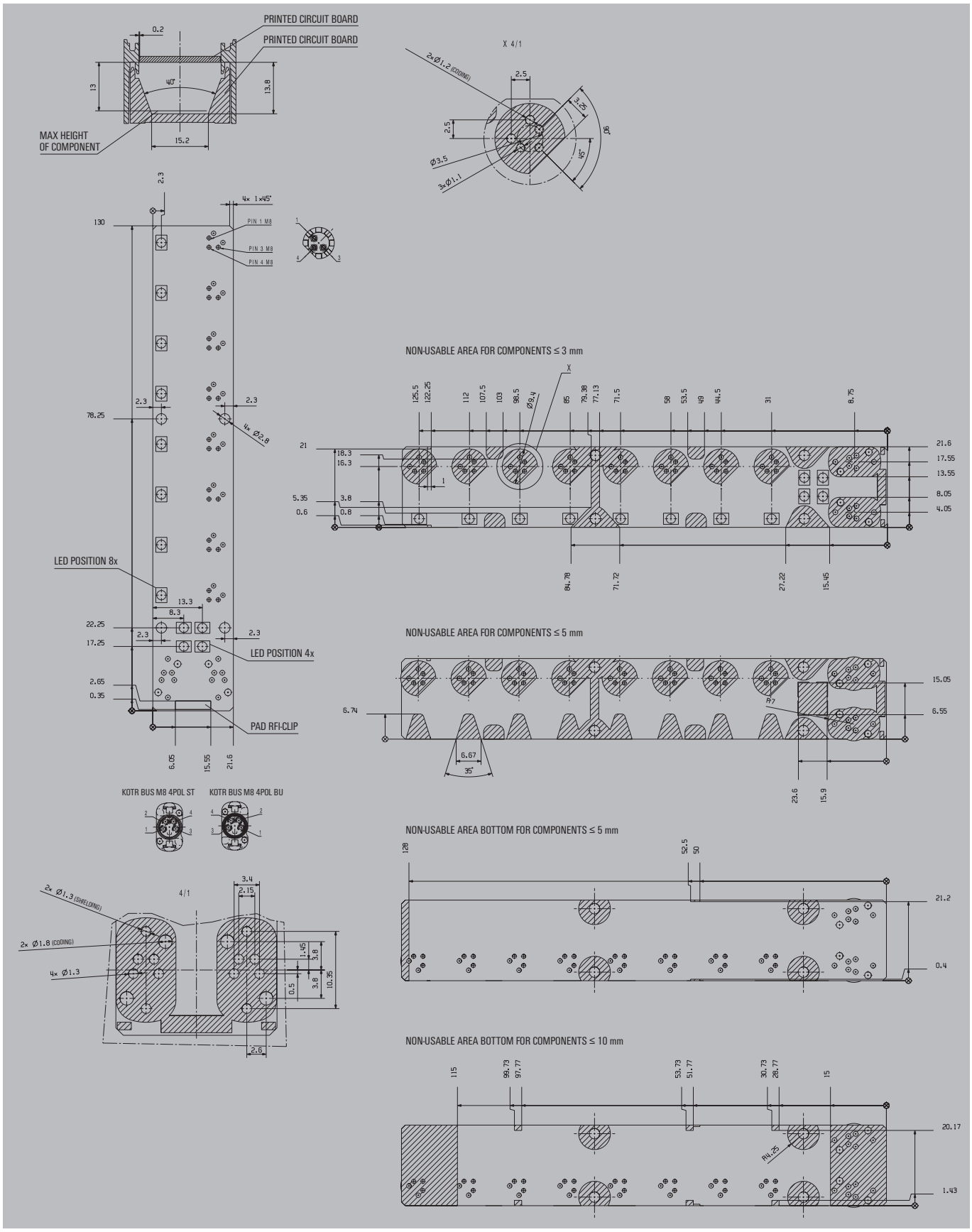

Free space 54 mm housing

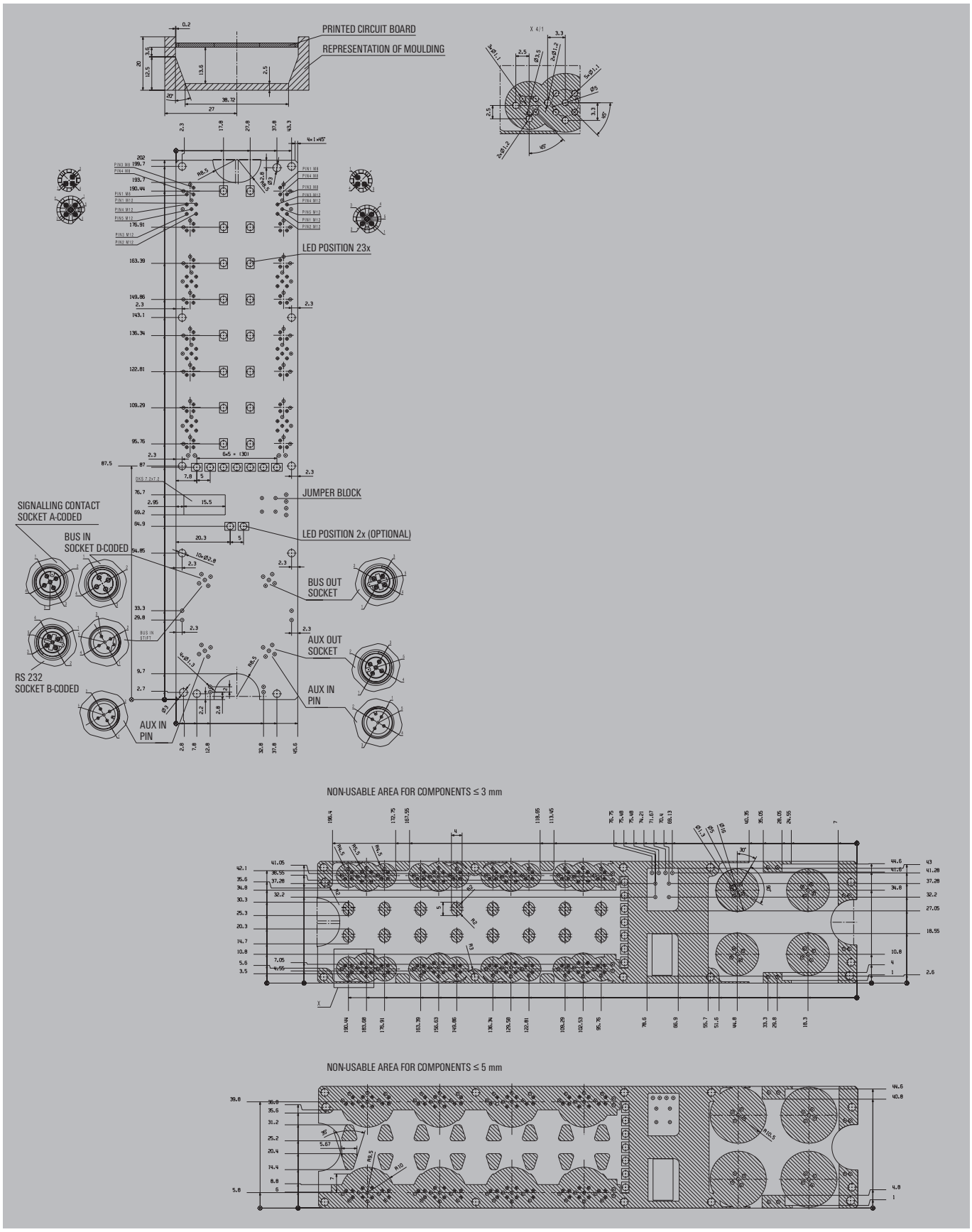

JACKPAC® (IP 67)

JACKPAC® (IP 67)	JACKPAC® – Overview	H.2
	JACKPAC® relay module	H.3
	JACKPAC® timer	H.4
	JACKPAC® signal inverter	H.5
	JACKPAC® test	H.6
	JACKPAC® – General Data and Accessories	H.7
	Empty housing SAI JACKPAC® for custom built-in components	H.8

The Concept

The IP 20 Solution

Until now, all signal conditioning tasks were carried out by modules designed to IP 20. For their own protection, these needed to be installed in central switchgear cabinets. However, decentralised solutions that do not require large switchgear cabinets are increasingly being sought for use in modern-day industrial automation technology.
It is true that shielded signals can be fed to the machinery via powerful fieldbus systems; but in each case, however, there remains an interconnecting cable between the subdistribution boards and the sensors/actuators are susceptible to interference from surrounding operations.
As has always been the case, signals are still influenced by overvoltages and earth loops; interference pulses are superimposed on sensor signals and malfunctions can be initiated.
The result is that signal conditioning modules sealed to IP 20 require terminal boxes, such as switchgear cabinets, or even cost-intensive special solutions (for example, sensor-actuator distributors with integrated signal-conditioning functions providing as many functions as possible, even when these are surplus to requirements).

The JACKPAC® Solution

By introducing **JACKPAC®**, the new M12 Signal Box with the high IP 67 ingress protection, Weidmüller can now provide a modular and versatile concept that makes it possible to condition signals in an industrial environment. Requiring no additional enclosures, these modules can be installed directly on the machine, in the production plant, conveyor system or within a process.
The M12 connector, which is standardised all over the world, makes it possible to integrate the **JACKPAC®** at any point in the sensor-actuator cabling. The fixed pin assignment means it is easy to install and is protected against polarity reversal. This versatility really comes into its own when an installation needs to be altered or modernised, simply because no additional enclosures or cabling are required.
By providing this high degree of protection and versatility, **JACKPAC®** renders possible innovative automation concepts based on decentralised applications – without large control cabinets or small distribution boards – for consistent, transparent, efficient and cost-efficient installations.

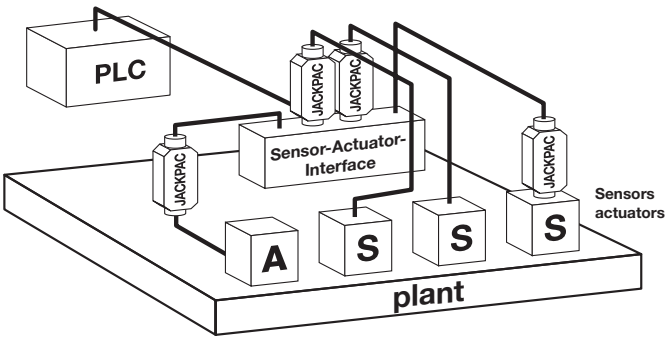

- Easy 'Plug and Play' installation
- Universal and versatile usage
- No additional enclosure required
- Saves time and costs
- Ideal for decentralised concepts and plant modernisation (retrofitting)

Switching amplifiers

- Switching amplifiers are simply built into the actuator system controls
- Switching outputs can be amplified from 24 V DC /0.5 A to 24 V DC / 2 A
- Galvanic isolation is optional, for insulating between the input and output circuits, which prevents conducted interference on the switching output
- Switched voltage feed at output via T-distributor

JPR 24 V DC 1CO M12

without isolation

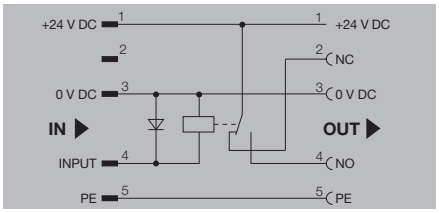

JPR 24 V DC ISO 1CO M12

with electrical isolation

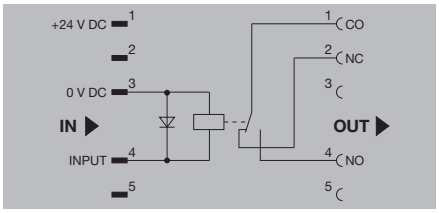

Technical data

Input		
Rated control voltage	24 V DC ±20 %	24 V DC ±20 %
Rated current DC	8 mA	8 mA
Power rating	200 mW	200 mW
DC Response/dropout volt	16.8 V / 1.2 V	16.8 V / 1.2 V
DC pickup/dropout current	5 mA / 1 mA	5 mA / 1 mA
Free-wheel diode	Yes	Yes
Output		
Max. switching power	24 V / 2 A	24 V / 2 A
Min. switching power	12 V / 10 mA	12 V / 10 mA
Contact material	AgSnO	AgSnO
Mechanical service life	10 x 10^6 switching cycles	10 x 10^6 switching cycles
Max. switching frequency at rated load	0.1 Hz	0.1 Hz
Sparkover time / Drop-out time	ca. 5 ms	ca. 5 ms
Insulation coordination (EN 50 178)		
Rated voltage	300	300
Surge voltage category	III	III
Pollution severity	2	2
General data		
Ambient temperature (operational)	-25 °C...+70 °C	-25 °C...+70 °C
Storage temperature	-25 °C...+70 °C	-25 °C...+70 °C
Conductor connection system	M12 plug / socket, A-coded	M12 plug / socket, A-coded
Approvals	cULus; GOSTME25	cULus; GOSTME25

Dimensions			
Clamping range (nominal / min. / max.)	mm²		
Length x width x height	mm	83 / 36 / 14.4	83 / 36 / 14.4
Note		Details for TU = 20 °C	Details for TU = 20 °C

Ordering data

Type	Qty.	Order No.
JPR 24VDC 1CO M12	1	**8771420000**

Type	Qty.	Order No.
JPR 24VDC ISO 1CO M12	1	**8771430000**

Note

Accessories

Note	Retaining clip JP CLIP M: 8778490000	Retaining clip JP CLIP M: 8778490000

Timer relay

Signal extenders can be easily connected to the cable between the sensor and the input modules.
They extend the pulse length from a minimum of 1 ms to 50 ms or 100 ms. This enables short senor signals to be reliably recognised and evaluated by the controller.

JPTA 50 MS 24VDC PNP M12

Pulse stretching, 50 ms

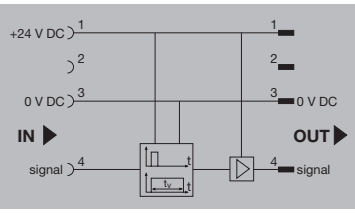

JPTA 100 MS 24VDC PNP M12

Pulse stretching, 100 ms

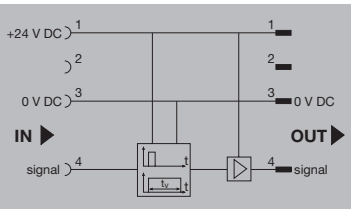

Technical data

	JPTA 50 MS 24VDC PNP M12	JPTA 100 MS 24VDC PNP M12
Input		
Rated control voltage	18...24...30 V DC	18...24...30 V DC
Rated current DC	3.5...7.0...10.0 mA	3.5...7.0...10.0 mA
Switch-off delay	50 ms	100 ms
Output		
Max. switching voltage, DC	30 V	30 V
Max. switching current	400 mA	400 mA
Insulation coordination (EN 50 178)		
Rated voltage	32 V	32 V
Impulse withstand voltage	330 V	330 V
Surge voltage category	I	I
Pollution severity	2	2
General data		
Ambient temperature (operational)	0 °C...+60 °C	0 °C...+60 °C
Storage temperature	-20 °C...+85 °C	-20 °C...+85 °C
Conductor connection system	M12 plug / socket, A-coded	M12 plug / socket, A-coded
Approvals	CE; cULus; GOSTME25	CE; cULus; GOSTME25

Dimensions			
Clamping range (nominal / min. / max.)	mm²		
Length x width x height	mm	83 / 36 / 14.4	83 / 36 / 14.4
Note			

Ordering data

Type	Qty.	Order No.
JPTA 50MS 24VDC PNP M12	1	8771440000

Type	Qty.	Order No.
JPTA100MS 24VDC PNP M12	1	8836630000

Note

Accessories

Note	JPTA 50 MS 24VDC PNP M12	JPTA 100 MS 24VDC PNP M12
	Retaining clip JP CLIP M: 8778490000	Retaining clip JP CLIP M: 8778490000

Signal inverter

Signal inverters convert PNP sensor signals to NPN signals and NPN signals back to PNP. This means that existing circuits do not require complex alteration and the existing inputs on the I/O cards can be put to best use. This is particularly well suited for the Asian and North American markets.

JPP NPN PNP 24 V DC

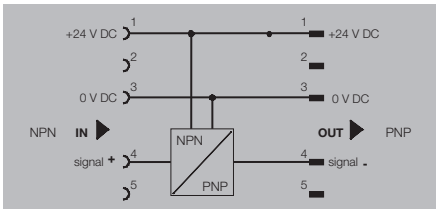

JPP PNP NPN 24 V DC

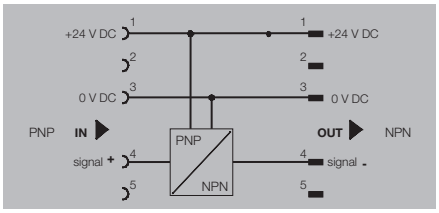

Technical data

Input		
Sensor	2-/ 3-Conductor Sensor NPN-type	2-/ 3-Conductor Sensor PNP-Type
Rated control voltage	18...24...30 V DC	18...24...30 V DC
Input current for sensor	< 200 mA	< 200 mA
Type of contact	NO contact	NO contact
Output		
Solid-state type	Solid state relay	Solid state relay
Rated switching voltage	18...30 V DC	18...30 V DC
Rated switching current	400 mA	400 mA
Voltage drop at max. load	≤ 1 V	
Insulation coordination (EN 50 178)		
Rated voltage	32 V	32 V
Impulse withstand voltage	330 V	330 V
Surge voltage category	I	I
Pollution severity	2	2
General data		
Ambient temperature (operational)	0 °C...+60 °C	0 °C...+60 °C
Storage temperature	-20 °C...+85 °C	-20 °C...+85 °C
Conductor connection system	M12 plug / socket, A-coded	M12 plug / socket, A-coded
Approvals	cULus; GOSTME25	CE; cULus; GOSTME25

Dimensions			
Clamping range (nominal / min. / max.)	mm²		
Length x width x height	mm	83 / 36 / 14.4	83 / 36 / 14.4
Note			

Ordering data

Type	Qty.	Order No.
JPP NPN PNP 24VDC	1	**8852350000**

Type	Qty.	Order No.
JPP PNP NPN 24VDC	1	**8857030000**

Note		

Accessories

Note	Retaining clip JP CLIP M: 8778490000	Retaining clip JP CLIP M: 8778490000

Test adapter

The new JACKPAC® test adapter can be easily integrated at any point on an M12 network and enables quick and easy connection of a testing device via the 5 PUSH IN connections. Status indicators show the status of the 2 signal channels as well as the 24 V DC auxiliary voltage.

JP TEST

with status indication

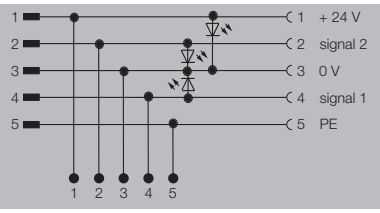

Technical data

Input	
Rated control voltage	18...24...30 V DC
Rated current DC	2.2 mA (LED)
Status indicator	Green LED
Output	
Continuous current	2 A
Power	2.2 mA at 24 V
General data	
Ambient temperature (operational)	0 °C...+55 °C
Storage temperature	-25 °C...+70 °C
Conductor connection system	M12 plug / socket, A-coded
Approvals	CE; GOSTME25

Dimensions		
Clamping range (nominal / min. / max.)	mm²	
Length x width x height	mm	83 / 36 / 14.4
Note		

Ordering data

Type	Qty.	Order No.
JP TEST	1	**8794120000**

Note

Accessories

Note	
	Retaining clip JP CLIP M: 8778490000

General data

Ingress protection class	IP 67
Housing material	PBT, RAL 7032 (grey)
Flammability class	V0 to UL94
Screw socket	M12, CuZn, nickel plated, A-coded
Rated torque	0.8 ... 1 Nm

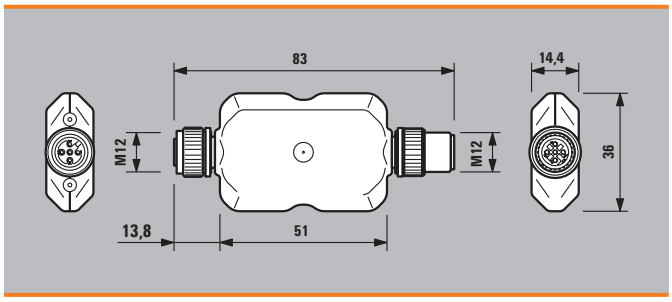

Contact assignment (socket)

Pole	Assignment
1	+24 V DC
2	Input / output 2
3	0 V DC
4	Input / output 1
5	PE / Earth

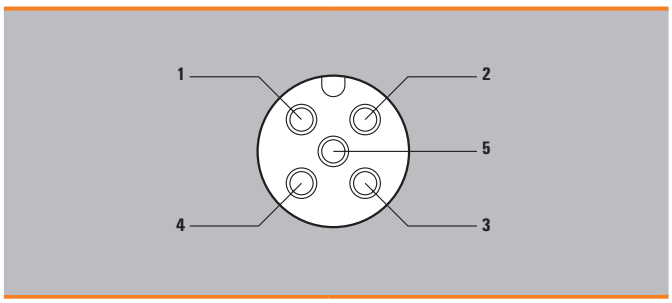

Accessories

Retaining clip

	Type	Qty.	Order No.
Stainless steel	JP CLIP M	1	8778490000

Twin plug

	Type	Qty.	Order No.
5-pole	SAI-Y-5S PARA M12/M12	1	1783430000

Screwty® M12

	Type	Qty.	Order No.
With torque	SCREWTY M12 DM	1	1900001000

Sensor cables

	Type	Qty.	Order No.
4-pole, length 0.3 m	SAIL-M12G-M12G-4-0.3U	1	1906300030
4-pole, length 0.6 m	SAIL-M12G-M12G-4-0.6U	1	1906300050
4-pole, length 1.5 m	SAIL-M12G-M12G-4-1.5U	1	1906300150
5-pole, length 0.3 m	SAIL-M12G-M12G-5-0.3U	1	9457340030
5-pole, length 0.6 m	SAIL-M12G-M12G-5-0.6U	1	9457340060
5-pole, length 1.5 m	SAIL-M12G-M12G-5-1.5U	1	9457340150

Additional accessories can be found in the Sensor Actuator Interface catalogue.

Empty housing SAI JACKPAC®
for custom built-in components

SAI JP

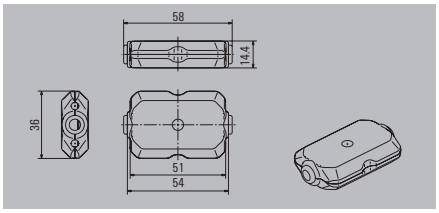

Technical data

General data	
Temperature range	-25 °C ... +70 °C
Connection system	M12 plug/socket, A-coded
Contact base material	AgSnO
Surface finish	Au

Dimensioned drawing SAI JP

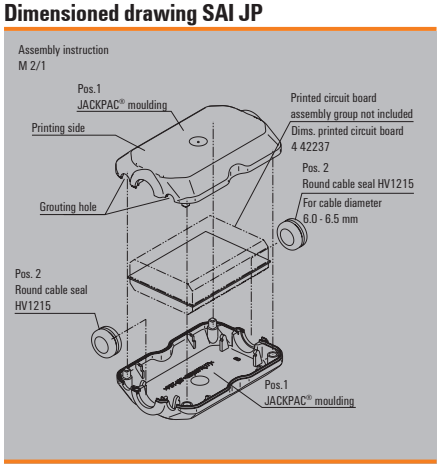

Dimensions		
Length x width x height	mm	83 x 36 x 14.4

Note

Dimensioned drawing, PCBs

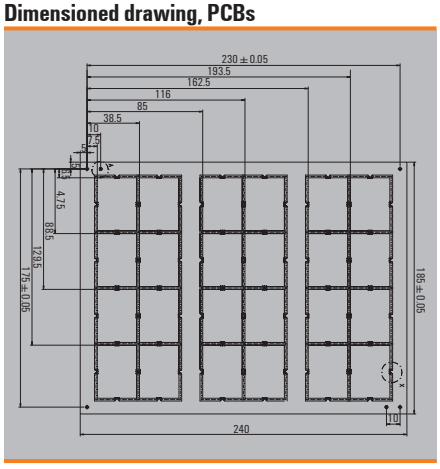

Ordering data

Housing with M12 connectors		Type	No. of poles	Qty.	Order No.
Contents	1 piece	SAI JP 4P LG	4	1	1915220000
	1 piece	SAI JP 5P LG	5	1	1918520000
	100 pieces	SAI JP 4P LG 100	4	1	8794090000
	100 pieces	SAI JP 5P LG 100	5	1	8794080000

Note

Housing without M12 connectors SAI JP FC SET 1933680000
1 Qty. = 100 pieces

Accessories

Passive distributors

Passive distributors	Introduction	I.2
	M12 distributors	I.4
	ECO modules	I.16
	M12 Push-Pull	I.18
	M12 IDC	I.26
	M12 VA stainless steel	I.30
	M12 metal distributors	I.32
	M12 distributors 1:1 Passive	I.38
	M12 Combi distributor	I.39
	M12 distributor for NPN and PNP sensors	I.40
	M12 wall bushing	I.41
	Solutions to customer specification	I.44
	M12 distributors accessories	I.45
	M8 distributors	I.46
	M5 distributors	I.56
	M12 Ex i distributors	I.60

SAI Passive

SAI Passive products are built with premium materials using the highest quality production methods. The fully encapsulated distributors are designed to meet harsh industrial requirements. Naturally they have also been designed so that they are easy to handle. The self assembled connectors in the hooded version, for example, are joined into a single part so that the entire block is available for the connection. This is a unique solution for distributors that has no equal anywhere. Nothing can break off, get mixed up or wired up incorrectly.

The distributors are equipped by default with threaded metal rings. This ensures a very reliable screw-on connection. The nut is completely threaded without any interruptions. This eliminates the possibility of it getting stuck or jammed. The IDC versions are especially noteworthy. Sensor cables of the proper lengths can be connected directly here.

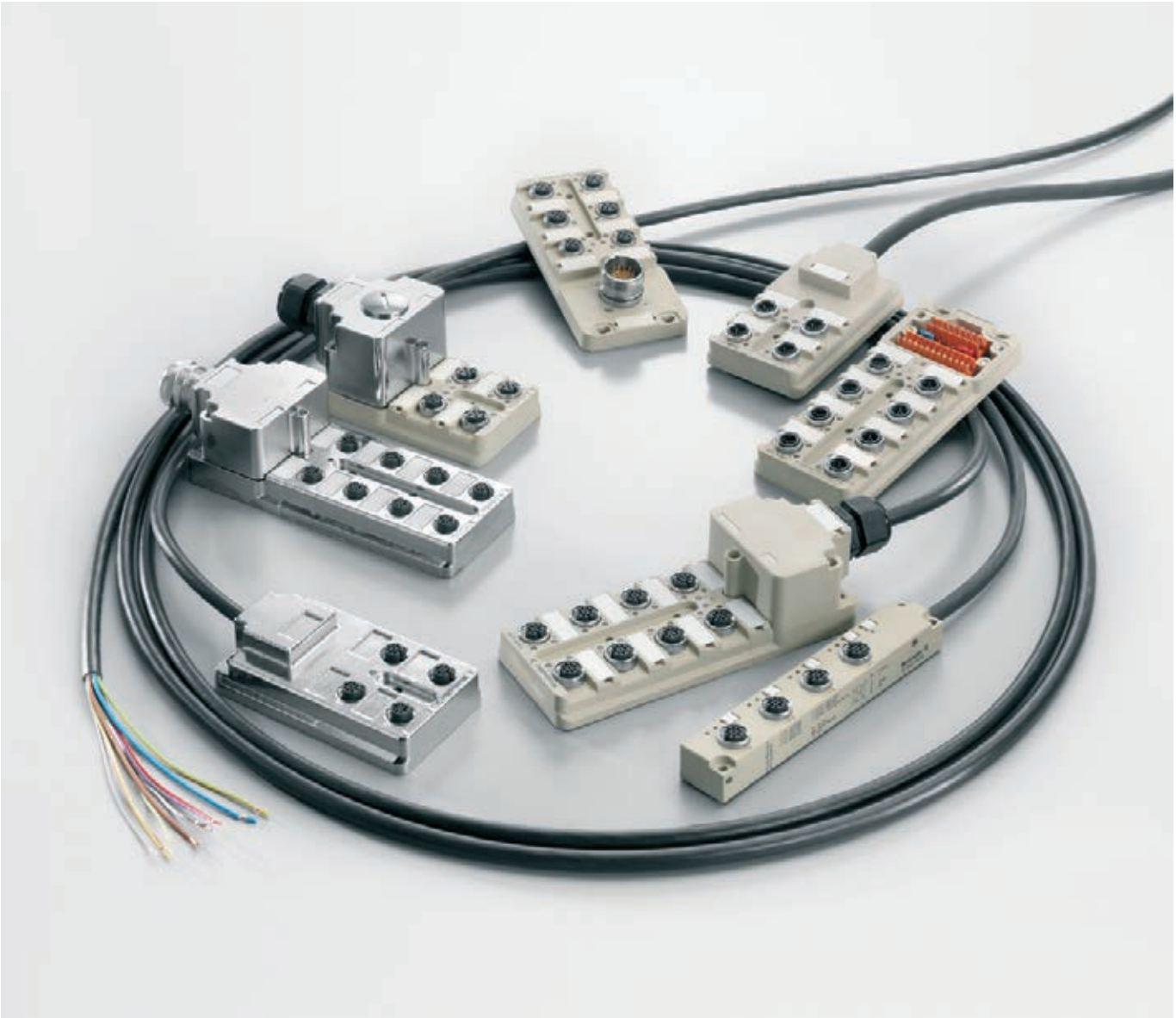

Compact

The connection block is a single piece.

Small

Extremely small M12 distributor

Fast

Insulation displacement connection can be used to directly connect the sensor cables

Robust

Threaded metal ring without cut outs for reliable, safe handling

M12 distributor standard

M12 distributor with DIP switch coding

M12 distributor with stainless steel housing

M12 distributor for Zone 1

SAI distributor with plug in connection hood: SAI-M

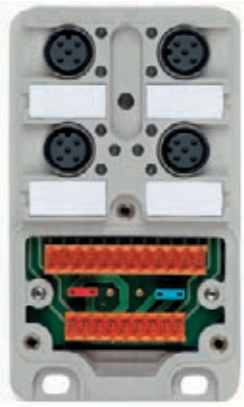

- Integrated plug in connector in connection hood
- M12 robust metal thread for sensor/actuator connection, now also available with plastic thread as an alternative
- Quick replacement of bus cables
- Bus cable can be supplied pre-assembled
- Two connection systems for bus cable: screw or tension clamp
- Very flat connection hood: no higher than smallest 90° M12 round plug
- Distributor and connection hood can be supplied separately
- Connection hood compatible with 4 and 8 channel SAI distributors (upgrades only entail changing the base module)
- IP 68 Ingress protection class (IDC IP 67),
- Housing made from Pocan® (PBT):
  – high dimensional stability
  – good electrical and mechanical properties
  – flame retardant without dioxin or furan formers
  – resistant to coolants and lubricants
- UL/CSA approvals for M12 SAI distributor
- SAI distributor available in pollution severity class 3
- Cable exit on top
- Weidmüller SAI distributors have the largest storage capacity in the connection hood
- Female connectors integrated into the metal plate for fast and reliable connections
- Wide range of M8 and M12 cables and plug-in connectors
- Various cable lengths available
- Metal hoods and housings also available
- Plug-in connection module for bus cables increases flexibility on site
- Integral, plug in electrical isolation for two separate electric circuits (e.g. for emergency stop)
- Simple and vibration resistant connections on site
- Captive metric screws (grade 8.8 steel) have a +/- head
- M12 and IDC connections
- 1:1 arrangement available

Overview of M12 Distributors

Fixed cable version

- Pre-assembled bus cable minimises installation time and reduces wiring errors
- Cable carrier compatible versions are available with polyurethane (PUR) sheathing

M12 Push-Pull quick-fit connection system

M12 Push-Pull is the new connection system for sensors and actuators. It is downward compatible to the existing M12 system, which means that both old M12 and new M12 Push-Pull lines can be used together on these SAIs. M12 Push-Pull decreases installation time and increases installation safety by means of colour coding and provides an audible click on locking for added reassurance.

SAI ECO – the cost-effective alternative

Weidmüller SAI distributors with hood have long since been standard fittings in machines and installations.

Why plastic threaded rings?

There are some applications, however, that call for a further version. In some applications it is necessary to avoid all metal parts, unless these are made from stainless steel.
In such cases stainless steel is then used for screws and nuts only, but the M12 threaded rings can be made from plastic. Such modules can now be supplied on request.

The use of plastic rings results in a cheaper alternative. Although the service life and resistance are reduced when compared to metal, this is acceptable for some applications.

Overview of SAI

M12 Plastic

	Hood	M23	5 m	10 m	15 m	20 m
4-way, 4-pole	1705920000	9456000000	9456190000	9456200000	9456210000	9456230000
4-way, 5-pole	1701230000	9456000001	9456330000	9456340000	9456350000	9456370000
6-way, 4-pole	1705930000	9456010000	9456470000	9456480000	9456490000	9456510000
6-way, 5-pole	1701240000	9456010001	9456610000	9456620000	9456630000	9456650000
8-way, 4-pole	1705940000	9456020000	9456750000	9456760000	9456770000	9456790000
8-way, 5-pole	1701250000	1795470000	9456890000	9456900000	9456910000	9456930000

M12 Metal

	Hood without shield connection	Hood with shield connection	5 m	10 m		
4-way, 4-pole		1783540000	9456190002	9456200002		
4-way, 5-pole	1783500000	1783520000				
8-way, 4-pole		1783530000	9456750002	9456760002		
8-way, 5-pole	1783490000	1783510000				

M12 Line

	M12 group outlet		5 m	10 m		
4-way, 4-pole	1267330000		1070650000	1070660000		
4-way, 5-pole			1070630000	1070640000		
6-way, 4-pole	1265940000		1265920000	1265930000		

M8 Line

	M12 group outlet	Solder version for PCB	5 m	10 m		
4-way, 3-pole	1828740000		1828720000	1828710000		
4-way, 4-pole			1849680000	1849690000		
6-way, 3-pole	1828730000	1057720000	1828700000	1828690000		
6-way, 4-pole			1849700000	1849670000		
8-way, 3-pole	1871680000		1828680000	1828670000		
8-way, 4-pole			1828620000	1828610000		
10-way, 3-pole	1877950000		1828660000	1828650000		
12-way, 3-pole			1828640000	1828630000		

Hood version

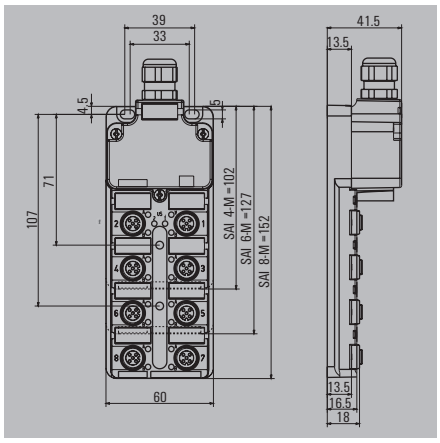

Ordering data

Complete modules		SAI-4/6/8-M		4-pole	SAI-4/6/8-M		5-pole
		Type	QTY	Order No.	Type	QTY	Order No.
	4 channel	SAI-4-M 4P M12	1	1705920000	SAI-4-M 5P M12	1	1701230000
	6 channel	SAI-6-M 4P M12	1	1705930000	SAI-6-M 5P M12	1	1701240000
	8 channel	SAI-8-M 4P M12	1	1705940000	SAI-8-M 5P M12	1	1701250000
Without initiator-LED,for analogue signals	4 channel				SAI-4-M 5P M12 OL	1	1800000000
Without initiator-LED,for analogue signals	8 channel				SAI-8-M 5P M12 OL2	1	1816610000
Tension-clamp connection	4 plug-in slots				SAI-4-M 5P M12 ZF	1	1854000000
Tension-clamp connection	8 channel				SAI-8-M 5P M12 ZF III	1	1767880000
Base unit							
	4 channel	SAI-4 M 4P M12 UT	2	1705921000	SAI-4-M 5P M12 UT	2	1701231000
	6 channel	SAI-6-M 4P M12 UT	2	1705931000	SAI-6-M 5P M12 UT	2	1701241000
	8 channel	SAI-8-M 4P M12 UT	2	1705941000	SAI-8-M 5P M12 UT	2	1701251000
Without initiator-LED,for analogue signals	8 channel				SAI-8-M 5P M12 OL UT	2	1740191000
Mounting hood							
	Tension-clamp connection	SAI-4/6/8-MH BLZF3.5	1	1752080000	SAI-4/6/8-MH BLZF3.5	1	1752080000
	Tension clamp connection	SAI-4/6/8-MH BLZF3.5 SV	50	1752080050	SAI-4/6/8-MH BLZF3.5 SV	50	1752080050
	Screw connection	SAI-4/6/8-MH BL3.5	1	1724750000	SAI-4/6/8-MH BL3.5	1	1724750000
	Screw connection	SAI-4/6/8-MH BL3.5 SV	50	1724750050	SAI-4/6/8-MH BL3.5 SV	50	1724750050
	Empty				SAI-4/6/8-MH LEER	1	1783460000
Complete modules,NPN-switched	8 channel				SAI-8-M 5P M12 NPN	1	1781060000
Note		Other versions on request			Other versions on request		

Technical data

Operating voltage	10...30 V
Current of continuous busbars	2 A
max. current-carrying capacity per slot	3 A
Total current	10 A
Pollution severity	3
Protection degree	IP 68
Ambient temperature range	-20...+90 °C
Housing main material	Pocan
Contact carrier material	PBT (UL 94 V0)
Base material of contacts	CuZn, pre-nickeled, gold-plated
screw socket	CuZn, nickel-plated
Housing colour	grey, RAL 7032
Flammability class UL 94	V-0
Clamping range of hood-version	0.08...1.5 mm²
Suitable for dragline cable (fixed cable connection)	

With dual power supply: 2x8 = 16A total current
Clamping range up to 2.5 mm² with screw connection

Wiring diagram

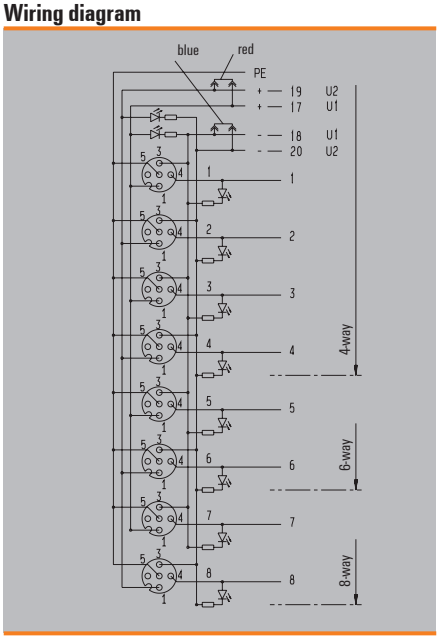

Wiring diagram

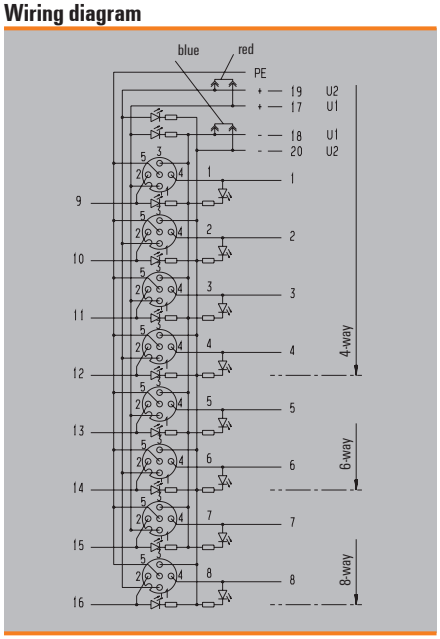

Fixed cable version

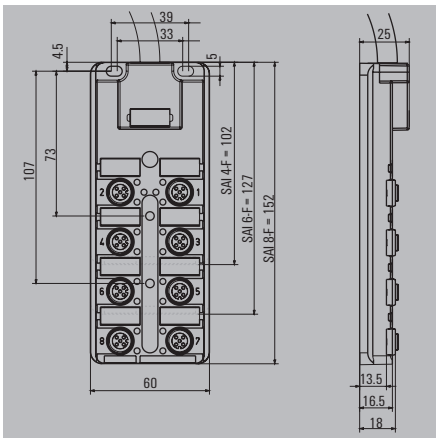

Ordering data

4 channel		SAI-4/6/8-F		4-pole	SAI-4/6/8-F		5-pole
		Type	QTY	Order No.	Type	QTY	Order No.
	Cable length 3 m	SAI-4-F 4P PUR 3M	1	9456180000	SAI-4-F 5P PUR 3M	1	9456320000
	Cable length 5 m	SAI-4-F 4P PUR 5M	1	9456190000	SAI-4-F 5P PUR 5M	1	9456330000
	Cable length 10 m	SAI-4-F 4P PUR 10M	1	9456200000	SAI-4-F 5P PUR 10M	1	9456340000
	Cable length 15 m	SAI-4-F 4P PUR 15M	1	9456210000	SAI-4-F 5P PUR 15M	1	9456350000
	Cable length 20 m	SAI-4-F 4P PUR 20M	1	9456230000	SAI-4-F 5P PUR 20M	1	9456370000
6 channel							
	Cable length 3 m	SAI-6-F 4P PUR 3M	1	9456460000	SAI-6-F 5P PUR 3M	1	9456600000
	Cable length 5 m	SAI-6-F 4P PUR 5M	1	9456470000	SAI-6-F 5P PUR 5M	1	9456610000
	Cable length 10 m	SAI-6-F 4P PUR 10M	1	9456480000	SAI-6-F 5P PUR 10M	1	9456620000
	Cable length 15 m	SAI-6-F 4P PUR 15M	1	9456490000	SAI-6-F 5P PUR 15M	1	9456630000
	Cable length 20 m	SAI-6-F 4P PUR 20M	1	9456510000	SAI-6-F 5P PUR 20M	1	9456650000
8 channel							
	Cable length 3 m	SAI-8-F 4P PUR 3M	1	9456740000	SAI-8-F 5P PUR 3M	1	9456880000
	Cable length 5 m	SAI-8-F 4P PUR 5M	1	9456750000	SAI-8-F 5P PUR 5M	1	9456890000
	Cable length 10 m	SAI-8-F 4P PUR 10M	1	9456760000	SAI-8-F 5P PUR 10M	1	9456900000
	Cable length 15 m	SAI-8-F 4P PUR 15M	1	9456770000	SAI-8-F 5P PUR 15M	1	9456910000
	Cable length 20 m	SAI-8-F 4P PUR 20M	1	9456790000	SAI-8-F 5P PUR 20M	1	9456930000
8 channel with reinforced fixed cable*							
	Cable length 2 m				SAI-8-F 5P 2M 0.5/1.0U	1	7915030000
	Cable length 5 m				SAI-8-F 5P 5M 0.5/1.0U	1	9457590000
	Cable length 10 m				SAI-8-F 5P 10M 0.5/1.0U	1	9457600000
	Cable length 15 m				SAI-8-F 5P 15M 0.5/1.0U	1	1784510000
	Cable length 20 m				SAI-8-F 5P 20M 0.5/1.0U	1	1784500000
Note		Other versions on request			Other versions on request		

Technical data

Operating voltage	10...30 V
Current of continuous busbars	2 A
max. current-carrying capacity per slot	3 A
Total current	9 A
Pollution severity	3
Protection degree	IP 68
Ambient temperature range	-20...+80 °C
Housing main material	Pocan
Contact carrier material	PBT (UL 94 V0)
Base material of contacts	CuZn, pre-nickeled, gold-plated
screw socket	CuZn, nickel-plated
Housing colour	grey, RAL 7032
Flammability class UL 94	V-0
Clamping range of hood-version	
Suitable for dragline cable (fixed cable connection)	Yes

* 3x1mm² und 16x0.5mm² total current 12A

Wiring diagram

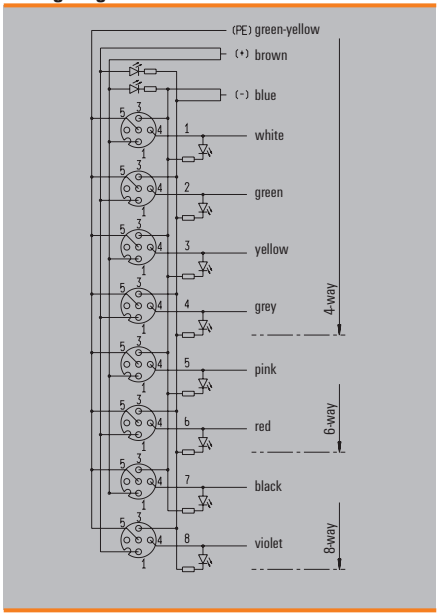

Wiring diagram

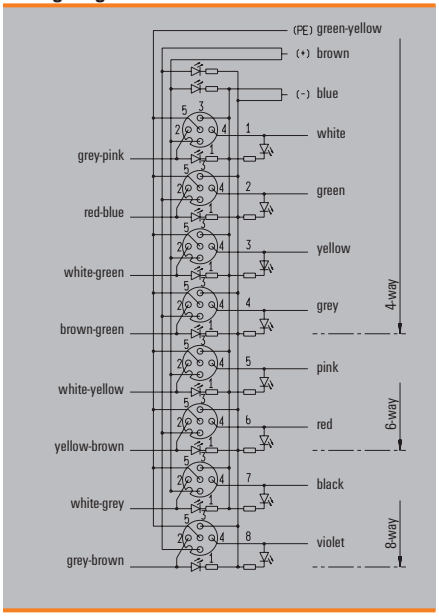

Fixed cable version
Thin design

SAI-4-F M12 L

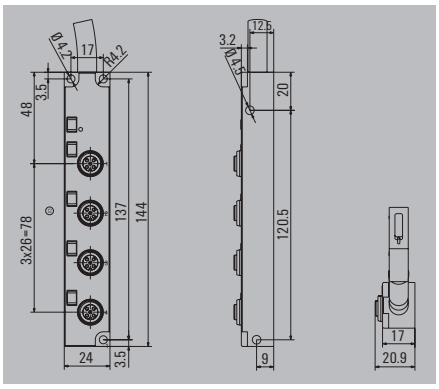

SAI-4-F M12 L

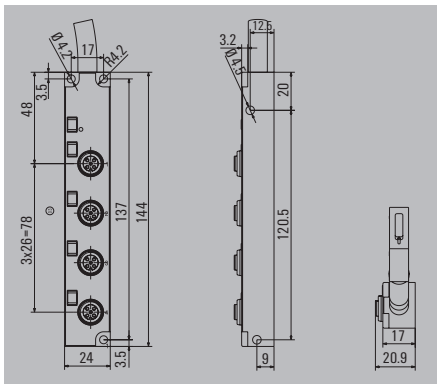

Ordering data

4 channel			
	Cable length 5 m		
	Cable length 10 m		
Note			

SAI-4-F M12 L

		4-pole
Type	**QTY**	**Order No.**
SAI-4-F 4P M12 L 5M	1	**1070650000**
SAI-4-F 4P M12 L 10M	1	**1070660000**
Other versions on request		

		5-pole
Type	**QTY**	**Order No.**
SAI-4-F 5P M12 L 5M	1	**1070630000**
SAI-4-F 5P M12 L 10M	1	**1070640000**
Other versions on request		

Technical data

Operating voltage	10...30 V
Current of continuous busbars	2 A
max. current-carrying capacity per slot	3 A
Total current	9 A
Pollution severity	3
Protection degree	IP 68
Ambient temperature range	-20...+80 °C
Housing main material	PA 6 GF
Contact carrier material	PBT (UL 94 V0)
Base material of contacts	CuZn, pre-nickeled, gold-plated
screw socket	CuZn, nickel-plated
Housing colour	grey, RAL 7032
Flammability class UL 94	V-0
Clamping range of hood-version	
Suitable for dragline cable (fixed cable connection)	Yes

Dimensioned drawing

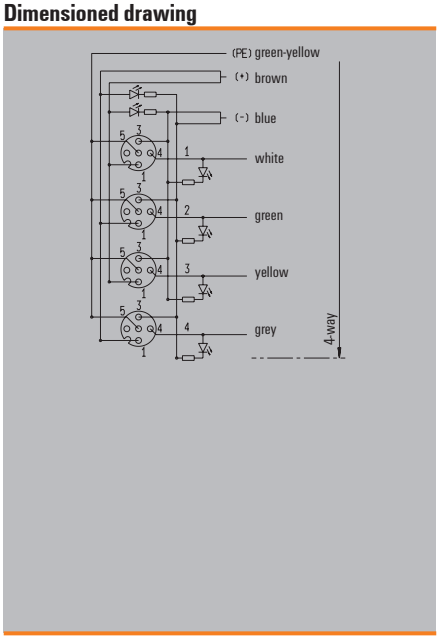

Dimensioned drawing

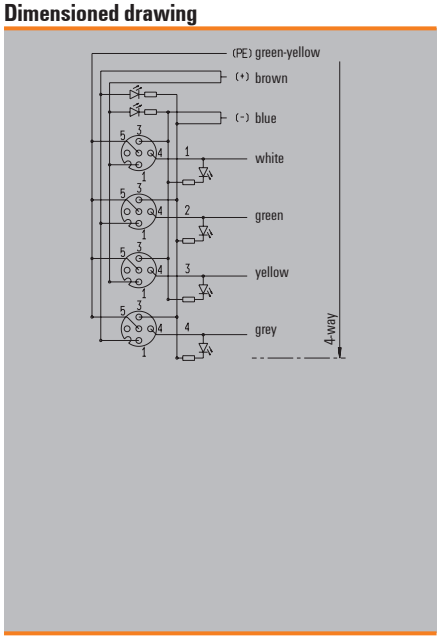

Fixed cable version
Thin design

SAI-6-F M12 L

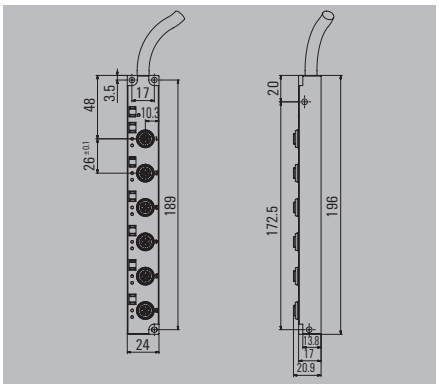

Ordering data

4 channel	
Cable length 5 m	
Cable length 10 m	
Note	

SAI-6-F M12 L — 4-pole

Type	QTY	Order No.
SAI-6-F 4P M12 L 5M	1	1265920000
SAI-6-F 4P M12 L 10M	1	1265930000

Technical data

Operating voltage	10...30 V
Current of continuous busbars	2 A
max. current-carrying capacity per slot	3 A
Total current	9 A
Pollution severity	3
Protection degree	IP 68
Ambient temperature range	-20...+80 °C
Housing main material	PA 6 GF
Contact carrier material	PBT (UL 94 V0)
Base material of contacts	CuZn, pre-nickeled, gold-plated
screw socket	CuZn, nickel-plated
Housing colour	grey, RAL 7032
Flammability class UL 94	V-0
Clamping range of hood-version	
Suitable for dragline cable (fixed cable connection)	Yes

Dimensioned drawing

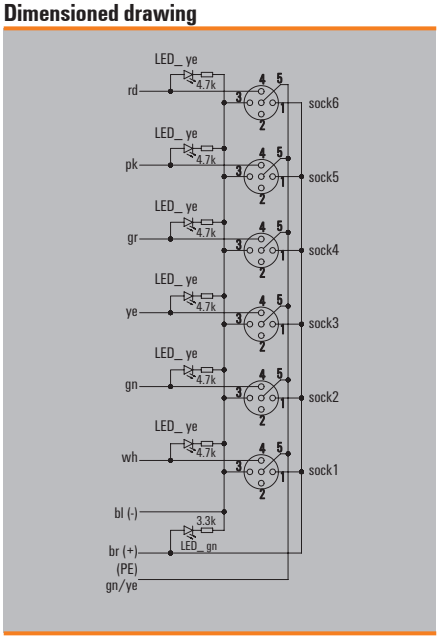

Line

SAI-4-S

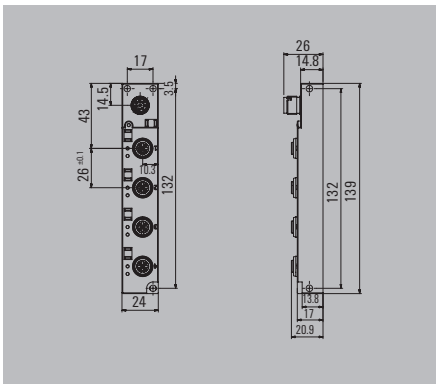

SAI-6-S

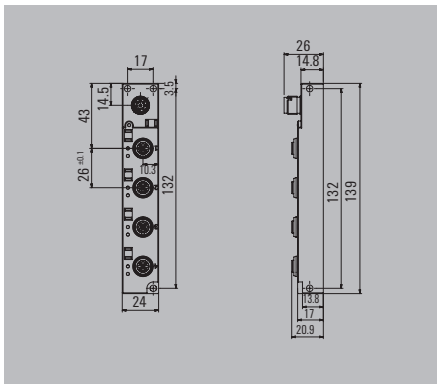

Ordering data

3-pole		
		4 channel
Note		

SAI-4-S

		M12
Type	**QTY**	**Order No.**
SAI-4-S8 4P M12 L	1	**1267330000**

		M12
Type	**QTY**	**Order No.**
SAI-6-S12 4P M12 L	1	**1265940000**

Technical data

Operating voltage	10...30 V
Current of continuous busbars	1 A
max. current-carrying capacity per slot	2 A
Total current	6 A
Pollution severity	3
Protection degree	IP 68
Ambient temperature range	-20 ...+80 °C
Housing main material	Pocan
Contact carrier material	PBT (UL 94 V0)
Base material of contacts	CuZn, pre-nickeled, gold-plated
screw socket	CuZn, nickel-plated
Housing colour	grey, RAL 7032
Flammability class UL 94	V-0
Clamping range of hood-version	
Suitable for dragline cable (fixed cable connection)	

Dimensioned drawing

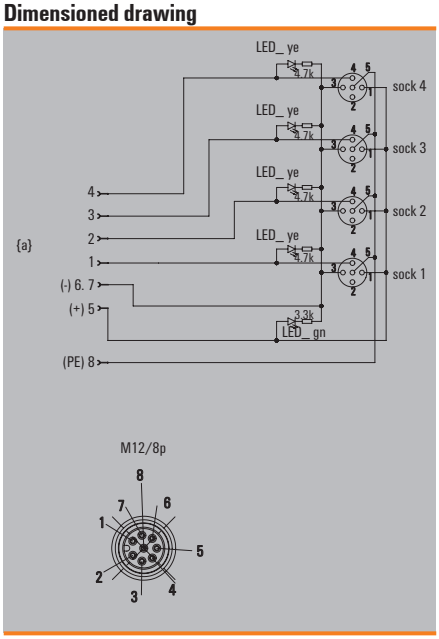

Dimensioned drawing

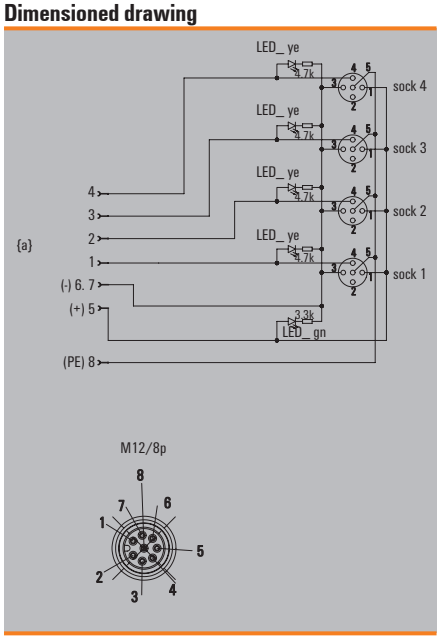

M12 distributors

with M23 outlet

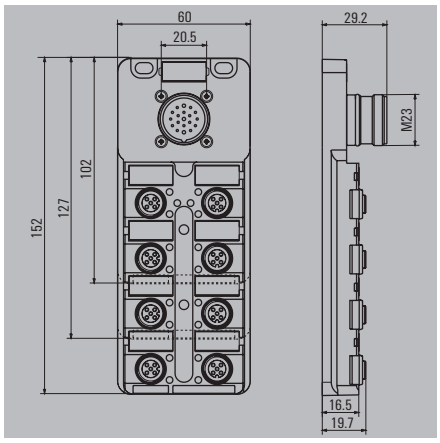

Ordering data

Complete modules			
	4 channel		
	6 channel		
	8 channel		
Note			

SAI-4/6/8-S		4-pole
Type	**QTY**	**Order No.**
SAI-4-S 4P M12	1	**9456000000**
SAI-6-S 4P M12	1	**9456010000**
SAI-8-S 4P M12	1	**9456020000**
Other versions on request		

SAI-4/6/8-S		5-pole
Type	**QTY**	**Order No.**
SAI-4-S 5P M12	1	**9456000001**
SAI-6-S 5P M12	1	**9456010001**
SAI-8-S 5P M12	1	**1795470000**
Other versions on request		

Technical data

Operating voltage	10...30 V
Current of continuous busbars	2 A
max. current-carrying capacity per slot	3 A
Total current	10 A
Pollution severity	3
Protection degree	IP 68
Ambient temperature range	-20...+90 °C
Housing main material	Pocan
Contact carrier material	PBT (UL 94 V0)
Base material of contacts	CuZn, pre-nickeled, gold-plated
screw socket	CuZn, nickel-plated
Housing colour	grey, RAL 7032
Flammability class UL 94	V-0
Clamping range of hood-version	
Suitable for dragline cable (fixed cable connection)	

Wiring diagram

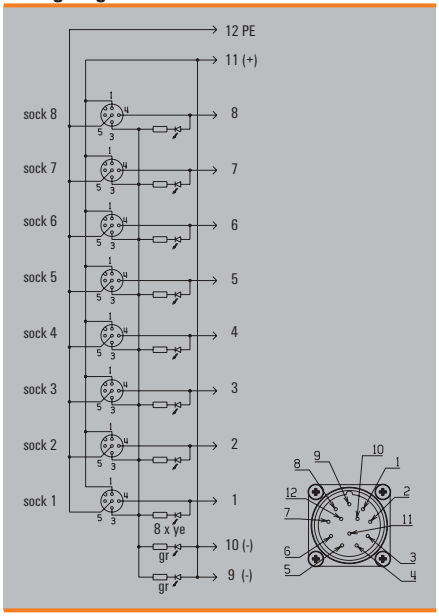

Wiring diagram

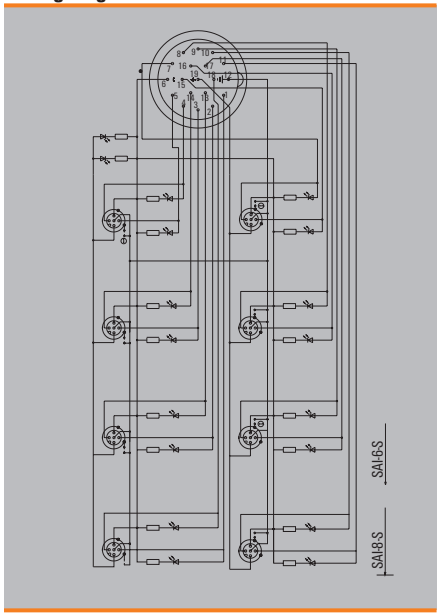

with M16 outlet

SAI-8-M16

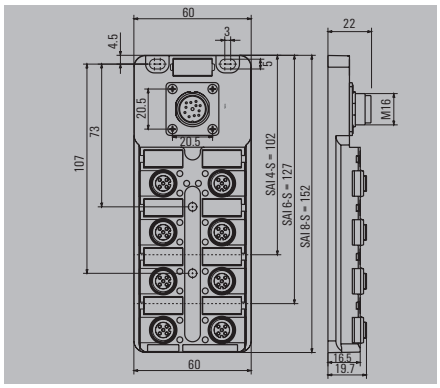

Ordering data

Complete modules	
	8 channel
Note	

SAI-8-M16

Type	QTY	Order No.
		4-pole
SAI-8-M16 4P M12	1	1831020000
Other versions on request		

Technical data

Operating voltage	10...30 V
Current of continuous busbars	2 A
max. current-carrying capacity per slot	3 A
Total current	6 A
Pollution severity	3
Protection degree	IP 67
Ambient temperature range	-20...+90 °C
Housing main material	Pocan
Contact carrier material	PBT (UL 94 V0)
Base material of contacts	CuZn, pre-nickeled, gold-plated
screw socket	CuZn, nickel-plated
Housing colour	grey, RAL 7032
Flammability class UL 94	V-0
Clamping range of hood-version	
Suitable for dragline cable (fixed cable connection)	

Dimensioned drawing

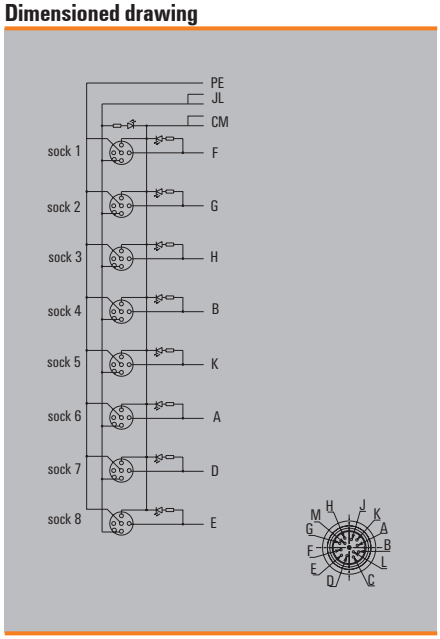

Hood version
with DIP-switch coding

SAI-8-M M12 DIP

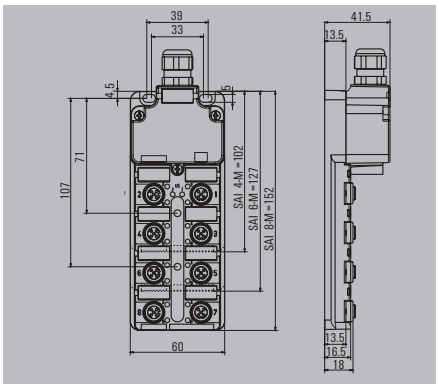

Ordering data

SAI-8-M M12 DIP		4-pole
Complete modules		
		8 channel
Type	**QTY**	**Order No.**
SAI-8-M-4P M12 DIP	1	**1059430000**
Note		
Other versions on request		

Technical data

Operating voltage	10...30 V
Current of continuous busbars	2 A
max. current-carrying capacity per slot	3 A
Total current	8 A
Pollution severity	3
Protection degree	IP 68
Ambient temperature range	-20...+90 °C
Housing main material	Pocan
Contact carrier material	PBT (UL 94 V0)
Base material of contacts	CuZn, pre-nickeled, gold-plated
screw socket	CuZn, nickel-plated
Housing colour	grey, RAL 7032
Flammability class UL 94	V-0
Clamping range of hood-version	0.08...1.5 mm²
Suitable for dragline cable (fixed cable connection)	

Dimensioned drawing

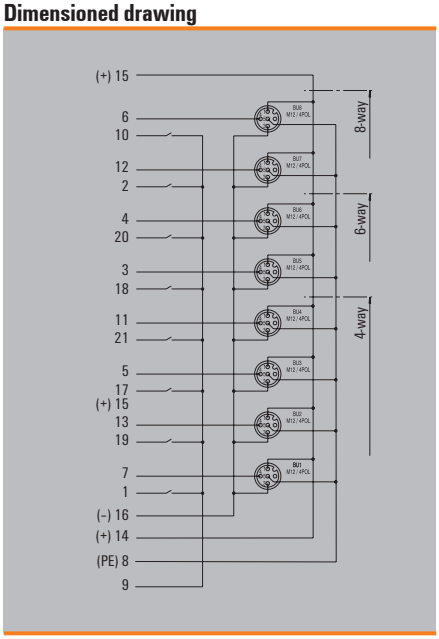

SAI ECO

SAI ECO – the cost-effective alternative

The Weidmüller SAI distributors with hoods have long since been standard fittings in machines and installations.

Why plastic threaded rings?

There are some applications, however, that call for a further version. In some applications it is necessary to avoid all metal parts. In such cases stainless steel is then used for screws and nuts only, but the M12 threaded rings can be made from plastic. Such modules can now be supplied on request.

The use of plastic rings results in a cheaper alternative. Although the service life and resistance are reduced when compared to metal, this is acceptable for some applications.

Special threaded ring increases durability

Cost-effective alternative

The ECO modules were initially developed to optimise costs. Many details of these modules were adapted in such a way that they can still be used wherever standard modules were used in the past, but the individual solutions have now become simpler:

- Markers: Markers clipped onto the module can no longer be printed with a identification system. It is easier to simply order the markers with the required printing from us. The markers in the proven MultiCard format are printed with our PrintJetPro Printer.
- One way disconnector: Up until now it was usual to achieve electrical isolation devised by Weidmüller by way of jumpers. To reduce costs, these jumpers have been replaced by solder bridges. These are simply cut to provide electrical isolation.
- No protective caps: Normally, Weidmüller M12 distributors are always supplied with two protective caps. These were not always required and so they have been omitted.
- Standard cable gland: The vibration resistant black screw cable gland has been replaced by a standard IP 68 cable gland.

These cost-cutting measures result in yet more applications for Weidmüller SAI distributors.

Greater reliability than with comparable systems

Plastic threaded rings are nothing new. However, the problem in the past was that the threaded rings formed part of the housing and were therefore made from the same plastic.

Weidmüller has once again pioneered a new and better solution. Weidmüller plastic rings are manufactured separately, which means that a more suitable, more durable material can be chosen. The Weidmüller production method is also patented.

Hood version

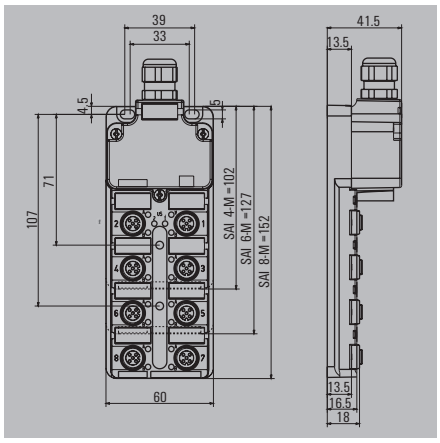

Ordering data

Complete modules		SAI-4/6/8-M		5-pole
		Type	**QTY**	**Order No.**
	4 channel	SAI-4-M 5P M12 ECO	1	**1892100000**
	6 channel	SAI-6-M 5P M12 ECO	1	**1892090000**
	8 channel	SAI-8-M 5P M12 ECO	1	**1892080000**
NPN	4 channel	SAI-4-M 5P M12 NPN ECO	1	**1892100005**
NPN	8 channel	SAI-8-M 5P M12 NPN ECO	1	**1892080005**
Base unit				
	4 channel	SAI-4-M 5P M12 ECO UT	2	**1892101000**
	6 channel	SAI-6-M 5P M12 ECO UT	2	**1892091000**
	8 channel	SAI-8-M 5P M12 ECO UT	2	**1892081000**
Mounting hood				
	Tension clamp connection	SAI-4/6/8-MH BLZF3.5 SV	50	**1752080050**
	Screw connection	SAI-4/6/8-MH BL3.5 SV	50	**1724750050**
Note		These distributors are supplied without protective caps and markers.		

Type	QTY	Order No.

Technical data

Operating voltage	10...30 V
Current of continuous busbars	2 A
max. current-carrying capacity per slot	3 A
Total current	10 A
Pollution severity	3
Protection degree	IP 68
Ambient temperature range	-20...+90 °C
Housing main material	Pocan
Contact carrier material	PBT (UL 94 V0)
Base material of contacts	CuZn, pre-nickeled, gold-plated
screw socket	Pocan
Housing colour	grey, RAL 7032
Flammability class UL 94	V-0
Clamping range of hood-version	0.08...1.5 mm²
Suitable for dragline cable (fixed cable connection)	

With dual power supply: 2x8 = 16A total current
Clamping range up to 2.5 mm² with screw connection

Wiring diagram

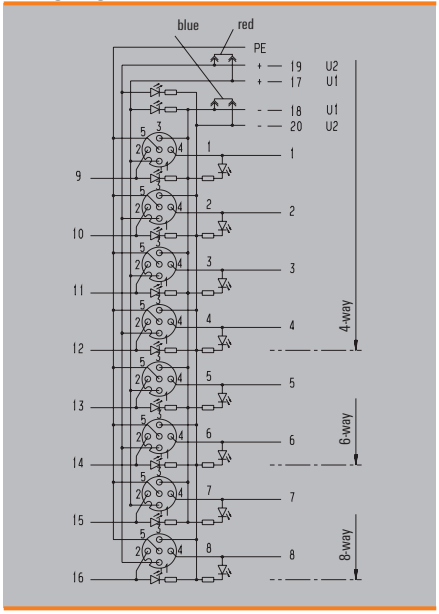

M12 Push-Pull: SAI distributors and cables, with rapid-connection technology

SAI distributors with M12 Push-Pull plug

M12 Push-Pull M23 versions

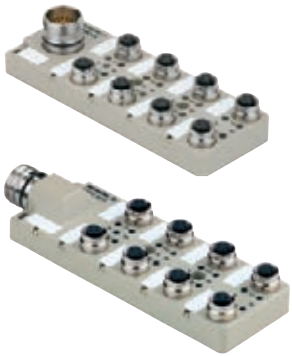

M12 Push-Pull hood version

M12 Push-Pull with bayonet connection

Whereas the standard M12 system requires the sleeves to be laboriously screwed on and that operation is hindered by the vibration guard, M12 Push-Pull works with one click, just like those well-known garden hose systems. The audible locking function guarantees a safe and reliable connection as well as a good seal.

M12 Push-Pull is currently supplied by Weidmüller and five other international companies.

M12 Push-Pull connections provide sufficient space for using T-pieces. The SAI module is slimmer and now only 54 mm wide.

The new SAI M12 Push-Pull distributors can be used with M12 plug-in connectors but also with the new M12 Push-Pull plug-in connectors.

The SAI distributors are available in fixed cable, hood, bayonet connection and M23 versions.

M12 Push-Pull speeds up installation and increases installation reliability thanks to the colour coding and the audible click when locking it into place.

Fixed cable version

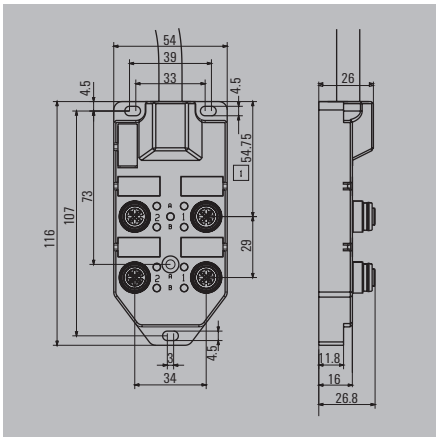

Ordering data

4 channel			
	Cable length 2 m		
	Cable length 5 m		
	Cable length 10 m		
8 channel			
	Cable length 2 m		
	Cable length 5 m		
	Cable length 10 m		
Note			

SAI-4/8-F		4-pole
Type	**QTY**	**Order No.**
SAI-4-F 4P FC 2M	1	**1848080000**
SAI-4-F 4P FC 5M	1	**1848060000**
SAI-4-F 4P FC 10M	1	**1848050000**
SAI-8-F 4P FC 2M	1	**1847990000**
SAI-8-F 4P FC 5M	1	**1848000000**
SAI-8-F 4P FC 10M	1	**1847980000**
Other versions on request		

SAI-4/8-F		5-pole
Type	**QTY**	**Order No.**
SAI-4-F 5P FC 2M	1	**1847940000**
SAI-4-F 5P FC 5M	1	**1847950000**
SAI-4-F 5P FC 10M	1	**1847930000**
SAI-8-F 5P FC 2M	1	**1848020000**
SAI-8-F 5P FC 5M	1	**1848030000**
SAI-8-F 5P FC 10M	1	**1848010000**
Other versions on request		

Technical data

Operating voltage	10...30 V
Current of continuous busbars	2 A
max. current-carrying capacity per slot	4 A
Total current	10 A
Pollution severity	3
Protection degree	IP 67
Ambient temperature range	-25...+80 °C
Housing main material	PA 6 GF
Contact carrier material	PBT (UL 94 V0)
Base material of contacts	CuZn, pre-nickeled, gold-plated
screw socket	CuZn, nickel-plated
Housing colour	grey, RAL 7032
Flammability class UL 94	V-0
Clamping range of hood-version	
Suitable for dragline cable (fixed cable connection)	Yes

Master trunk cable 3x1mm² x n x 0.34mm²; Hallogen

Wiring diagram

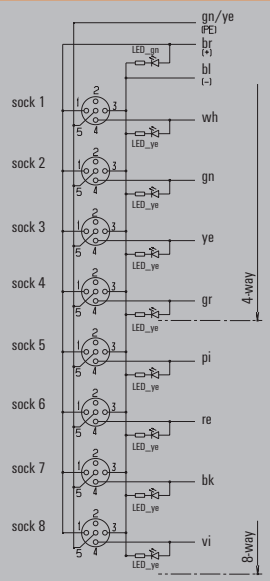

Wiring diagram

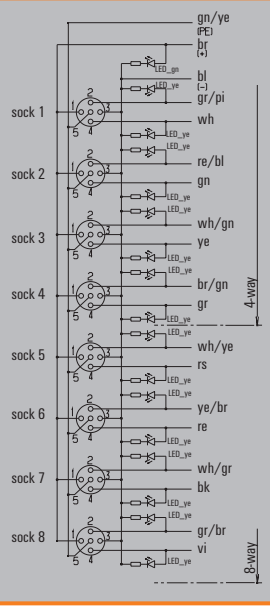

M12 Push-Pull

with M23 outlet

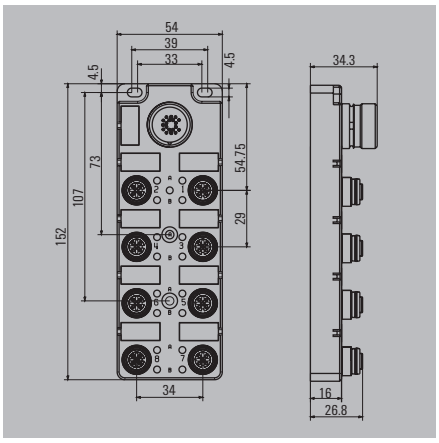

Ordering data

Complete modules	
4 channel	
8 channel	
Note	

SAI-4/8-S		4-pole
Type	**QTY**	**Order No.**
SAI-4-S 4P FC	1	**1847960000**
SAI-8-S 4P FC	1	**1847920000**
Other versions on request		

SAI-4/8-S		5-pole
Type	**QTY**	**Order No.**
SAI-4-S 5P FC	1	**1847970000**
SAI-8-S 5P FC	1	**1848040000**
Other versions on request		

Technical data

Operating voltage	10...30 V
Current of continuous busbars	2 A
max. current-carrying capacity per slot	4 A
Total current	9 A
Pollution severity	3
Protection degree	IP 67
Ambient temperature range	-25...+80 °C
Housing main material	PA 6 GF
Contact carrier material	PBT (UL 94 V0)
Base material of contacts	CuZn, pre-nickeled, gold-plated
screw socket	CuZn, nickel-plated
Housing colour	grey, RAL 7032
Flammability class UL 94	V-0
Clamping range of hood-version	
Suitable for dragline cable (fixed cable connection)	

Wiring diagram

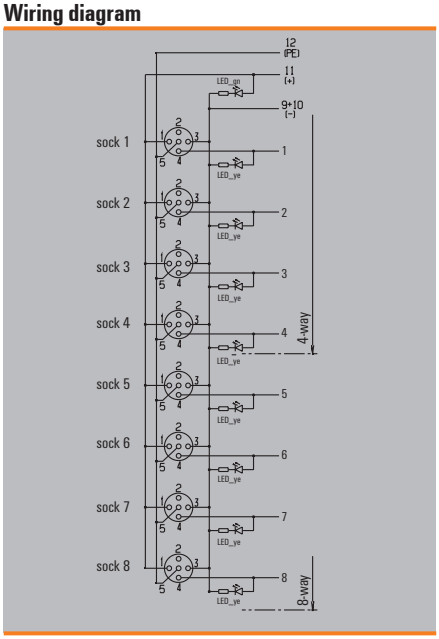

Wiring diagram

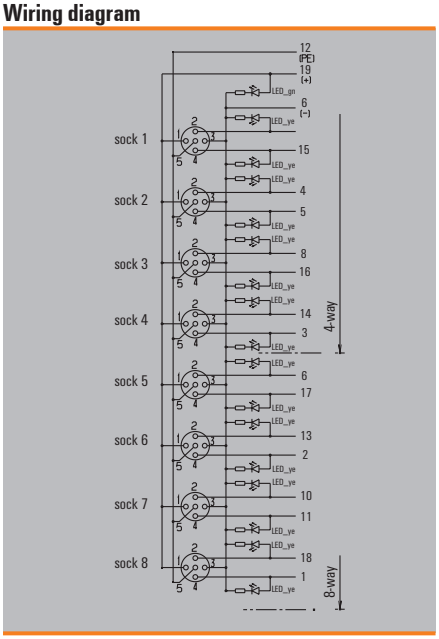

with M23 outlet on front

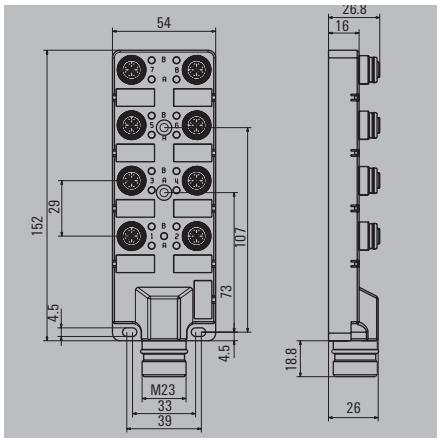

Ordering data

Complete modules			
	4 channel		
	8 channel		
Note			

SAI-4/8-SH — 4-pole

Type	QTY	Order No.
SAI-4-SH 4P FC	1	1859110000
SAI-8-SH 4P FC	1	1859120000

SAI-4/8-SH — 5-pole

Type	QTY	Order No.
SAI-4-SH 5P FC	1	1859130000
SAI-8-SH 5P FC	1	1859140000

Technical data

Operating voltage	10...30 V
Current of continuous busbars	2 A
max. current-carrying capacity per slot	4 A
Total current	9 A
Pollution severity	3
Protection degree	IP 67
Ambient temperature range	-25...+80 °C
Housing main material	PA 6 GF
Contact carrier material	PBT (UL 94 V0)
Base material of contacts	CuZn, pre-nickeled, gold-plated
screw socket	CuZn, nickel-plated
Housing colour	grey, RAL 7032
Flammability class UL 94	V-0
Clamping range of hood-version	
Suitable for dragline cable (fixed cable connection)	

Wiring diagram

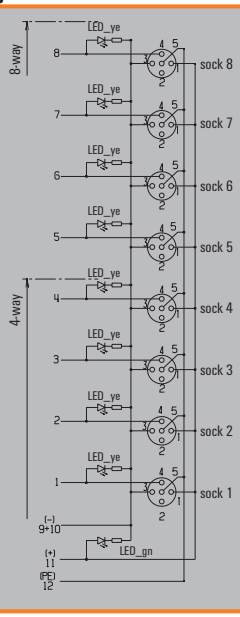

Wiring diagram

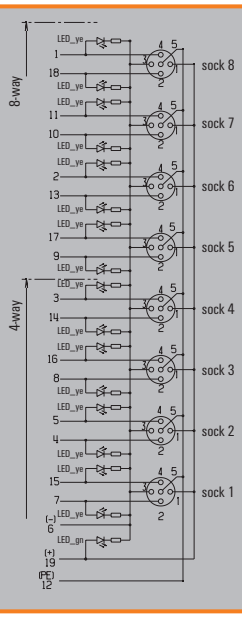

Hood version

SAI-8-M

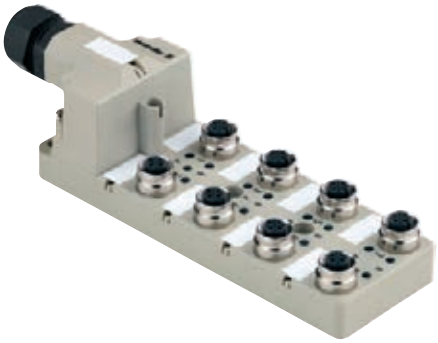

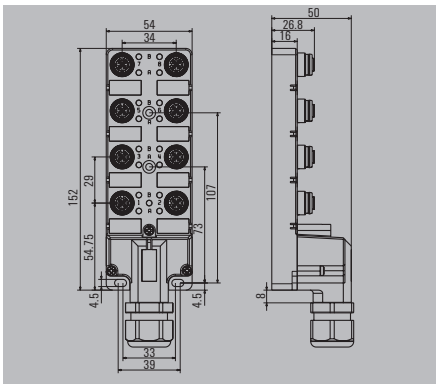

Ordering data

Complete modules	
	8 channel
Note	

SAI-8-M — 5-pole

Type	QTY	Order No.
SAI-8-M 5P FC	1	1848070000

Other versions on request

Technical data

Operating voltage	10...30 V
Current of continuous busbars	2 A
max. current-carrying capacity per slot	4 A
Total current	
Pollution severity	3
Protection degree	IP 67
Ambient temperature range	-25...+80 °C
Housing main material	PA 6 GF
Contact carrier material	PBT (UL 94 V0)
Base material of contacts	CuZn, pre-nickeled, gold-plated
screw socket	CuZn, nickel-plated
Housing colour	grey, RAL 7032
Flammability class UL 94	V-0
Clamping range of hood-version	
Suitable for dragline cable (fixed cable connection)	

Master trunk cable 3x1mm² x n x 0.34mm²; halogen-free

Dimensioned drawing

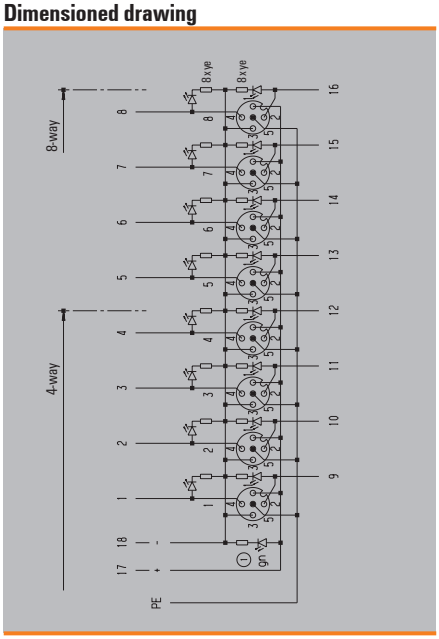

Terminal	Slot M12	Contact	Colour
1	1	4	white
2	2	4	green
3	3	4	yellow
4	4	4	grey
5	5	4	pink
6	6	4	red
7	7	4	black
8	8	4	violet
9	1	2	grey/pink
10	2	2	red/blue
11	3	2	white/green
12	4	2	brown/green
13	5	2	white/yellow
14	6	2	yellow/brown
15	7	2	white/grey
16	8	2	grey/brown
17	1-8	1	brown (+)
18	1-8	3	blue (–)
PE	1-8	5	green/yellow (PE)

CNOMO

SAI-4/8-S

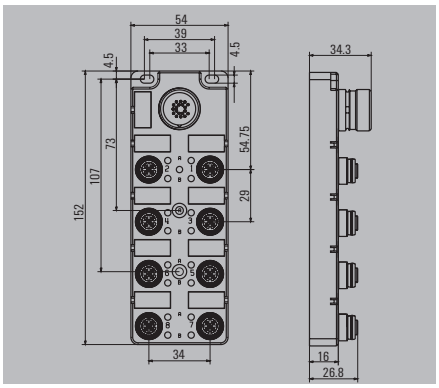

SAI-4/8-F

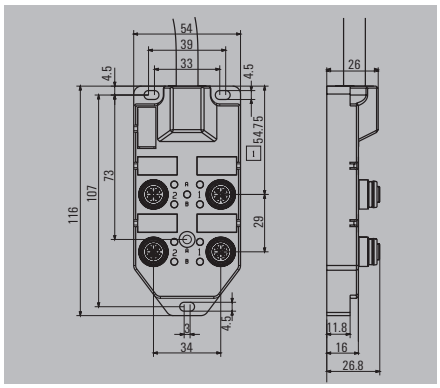

Ordering data

4 channel		SAI-4/8-S Type	QTY	5-pole Order No.	Type	QTY	5-pole Order No.
	Cable length 5 m				SAI-4-F 5P CNOMO 5M	1	1861570000
	Cable length 10 m				SAI-4-F 5P CNOMO 10M	1	1861560000
8 channel							
	Cable length 5 m				SAI-8-F 5P CNOMO 5M	1	1861550000
	Cable length 10 m				SAI-8-F 5P CNOMO 10M	1	1861590000
M23							
	4 channel	SAI-4-S 5P CNOMO	1	1861540000			
	8 channel	SAI-8-S 5P CNOMO	1	1861580000			
Note							

Technical data

Operating voltage	10...50 V
Current of continuous busbars	2 A
max. current-carrying capacity per slot	4 A
Total current	8 A
Pollution severity	3
Protection degree	IP 67
Ambient temperature range	-25...+80 °C
Housing main material	PA 6 GF
Contact carrier material	PBT (UL 94 V0)
Base material of contacts	CuZn, pre-nickeled, gold-plated
screw socket	CuZn, nickel-plated
Housing colour	grey, RAL 7032
Flammability class UL 94	V-0
Clamping range of hood-version	
Suitable for dragline cable (fixed cable connection)	Yes

Max. total current with 4-channel distributor is 8A. And with 8-channel distributor is 12A

Dimensioned drawing

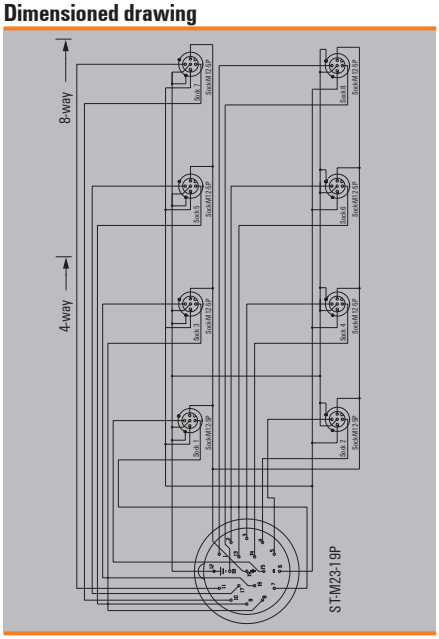

Dimensioned drawing

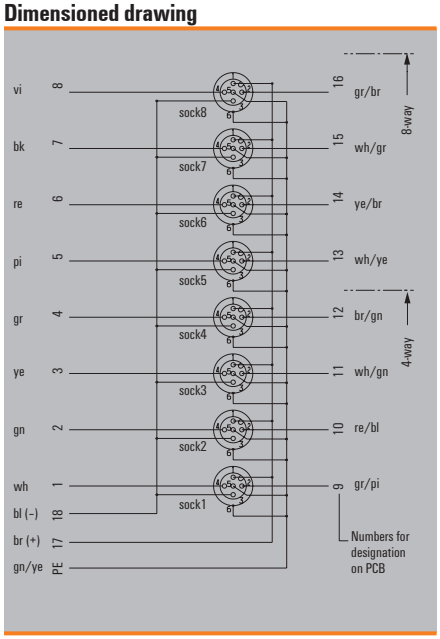

Bayonet joint

SAI-8-SHB

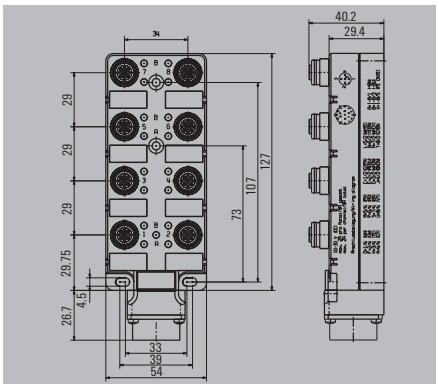

Ordering data

Complete modules	
	8 channel
Note	

SAI-8-SHB		5-pole
Type	**QTY**	**Order No.**
SAI-8-SHB 5P FC	1	**1872440000**
Other versions on request		

Technical data

Operating voltage	10...30 V
Current of continuous busbars	2 A
max. current-carrying capacity per slot	4 A
Total current	9 A
Pollution severity	3
Protection degree	IP 67
Ambient temperature range	-25...+80 °C
Housing main material	PA 6 GF
Contact carrier material	PBT (UL 94 V0)
Base material of contacts	CuZn, pre-nickeled, gold-plated
screw socket	CuZn, nickel-plated
Housing colour	grey, RAL 7032
Flammability class UL 94	V-0
Clamping range of hood-version	
Suitable for dragline cable (fixed cable connection)	

Dimensioned drawing

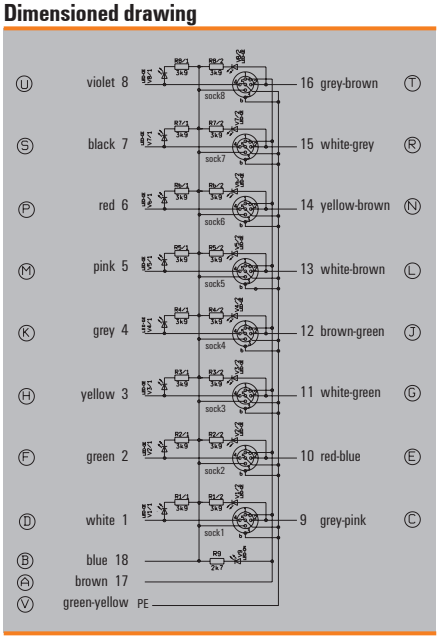

Bayonet joint with socket connector on reverse

SAI-8-SHB

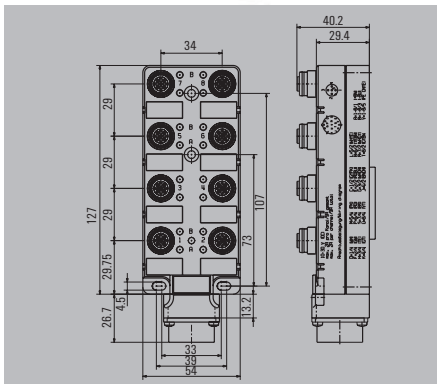

Ordering data

Complete modules	
	8 channel
Note	

SAI-8-SHB — 5-pole

Type	QTY	Order No.
SAI-8-SHB 5P F13 FC	1	1872460000
Other versions on request		

Technical data

Operating voltage	10...30 V
Current of continuous busbars	2 A
max. current-carrying capacity per slot	4 A
Total current	9 A
Pollution severity	3
Protection degree	IP 67
Ambient temperature range	-25...+80 °C
Housing main material	PA 6 GF
Contact carrier material	PBT (UL 94 V0)
Base material of contacts	CuZn, pre-nickeled, gold-plated
screw socket	CuZn, nickel-plated
Housing colour	grey, RAL 7032
Flammability class UL 94	V-0
Clamping range of hood-version	
Suitable for dragline cable (fixed cable connection)	

Dimensioned drawing

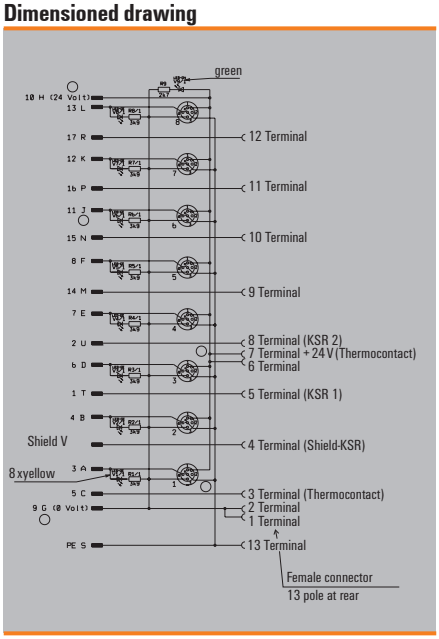

IDC – the quick connection

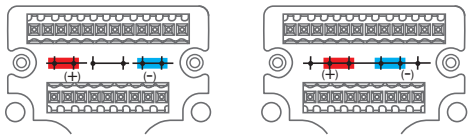

Factory setting
(see wiring diagram)
Current bridged

Current isolated

Hood version

- Compact IDC connection cuts production, commissioning and maintenance work
- Robust, knurled metal nut, safe handling requiring little force
- The dimensions of the IDC distributor correspond to and are compatible with the standard SAI distributor.
- Plug-in connection module for bus cables enhances on-site flexibility
- Three sizes for 4, 6 and 8 channels
- 3-pole version with one I/O signal per channel, 4-pole version with two I/O signals per channel
- Individual on site assembly of sensor/actuator lines
- Fast, reliable connection with IDC connection element
- IP 67 Ingress protection classification.

SAI fixed cable version

- Pre-assembled bus cables minimise installation work and avoid wiring errors
- 3 sizes for 4, 6 and 8 channels
- Highly flexible, cable carrier compatible bus cables with polyurethane (PUR/PVC) sheathing
  - 3 x 0.75 mm^2
  - n x 0.34 mm^2,
- 3-pole version with one I/O signal per channel, 4-pole version with two I/O signals per channel

IDC connection element

Ordering data

Type	Qty.	Order No.
SAI-SA-3-IDC	1	9457720000
SAI-SA-4-IDC	1	1766810000

The significant advantages of Weidmüller tools:

- Easy handling
- Very small, ideal for confined assembly conditions
- Patented solution
- Metal Connectors

Insulation displacement connections on Weidmüller SAI distributors are currently the smallest but also the most robust connection elements on the market. Thanks to their extremely small dimensions, corresponding distributors are available with the same dimensions in M12 or IDC versions.
For large series, e.g. where more than 100 modules are used every year, we recommend using a special tool to simplify the handling of the connected lines even further. However, this tool is not always necessary because all connection elements can usually be readily tightened by hand.

IDC-Tool

Ordering data

Type	Qty.	Order No.
SAI-IDC-Tool	1	1795020000

Screwty®

The IDC elements can also be tightened with the Weidmüller Screwty®.

Ordering data

Type	Qty.	Order No.
Screwty®-M12-DM	1	1900001000

Protective cap M12 for IDCw

Ordering data

Type	Qty.	Order No.
SAI-SK-M12 IDC	10	1794850000

M12 IDC

Hood version

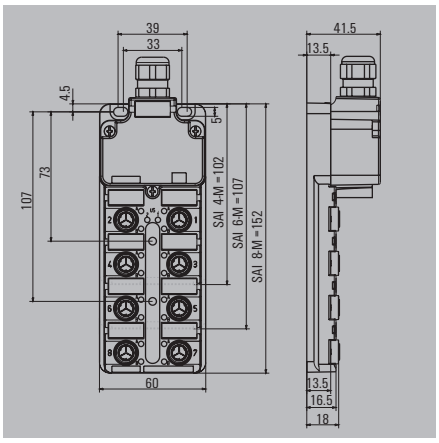

Ordering data

Complete modules		SAI-4/6/8-M IDC		3-pole	SAI-4/6/8-M IDC		4-pole
		Type	QTY	Order No.	Type	QTY	Order No.
	4 channel	SAI-4-M 3P IDC	1	1760040000	SAI-4-M 4P IDC	1	1766780000
	6 channel	SAI-6-M 3P IDC	1	1760050000	SAI-6-M 4P IDC	1	1766790000
	8 channel	SAI-8-M 3P IDC	1	1760060000	SAI-8-M 4P IDC	1	1766800000
Base unit							
	4 channel	SAI-4-M 3P IDC UT	2	1760041000	SAI-4-M 4P IDC UT	2	1766781000
	6 channel	SAI-6-M 3P IDC UT	2	1760051000	SAI-6-M 4P IDC UT	2	1766791000
	8 channel	SAI-8-M 3P IDC UT	2	1760061000	SAI-8-M 4P IDC UT	2	1766801000
Mounting hood							
	Tension-clamp connection	SAI-4/6/8-MH BLZF3.5	1	1752080000	SAI-4/6/8-MH BLZF3.5	1	1752080000
	Tension clamp connection	SAI-4/6/8-MH BLZF3.5 SV	50	1752080050	SAI-4/6/8-MH BLZF3.5 SV	50	1752080050
	Screw connection	SAI-4/6/8-MH BL3.5	1	1724750000	SAI-4/6/8-MH BL3.5	1	1724750000
	Screw connection	SAI-4/6/8-MH BL3.5 SV	50	1724750050	SAI-4/6/8-MH BL3.5 SV	50	1724750050
Note		Other versions on request			Other versions on request		

Technical data

Operating voltage	10...30 V
Current of continuous busbars	2 A
max. current-carrying capacity per slot	3 A
Total current	10 A
Pollution severity	2
Protection degree	IP 67
Ambient temperature range	-20...+90 °C
Housing main material	Pocan
Contact carrier material	PBT (UL 94 V0)
Base material of contacts	
screw socket	CuZn, nickel-plated
Housing colour	grey, RAL 7032
Flammability class UL 94	V-0
Clamping range of hood-version	0.08...1.5 mm²
Suitable for dragline cable (fixed cable connection)	

With dual power supply: 2x8 = 16 A total current
Clamping range up to 2.5 mm² with screw connection

Wiring diagram

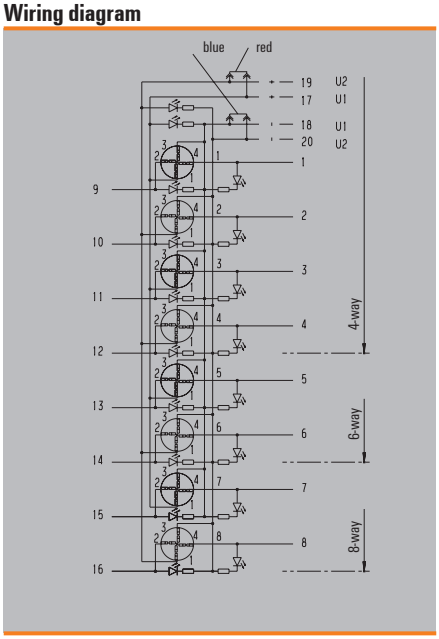

Wiring diagram

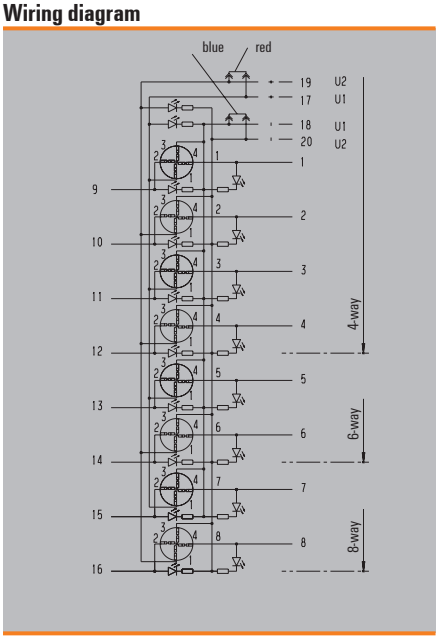

Fixed cable version

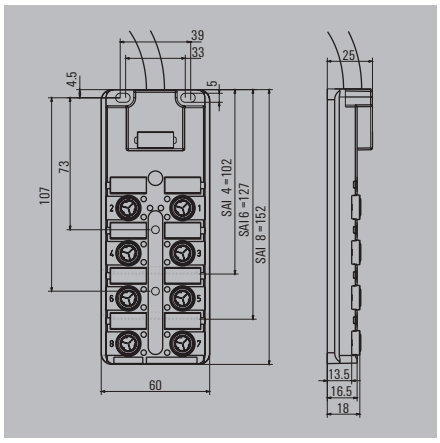

Ordering data

4 channel		
Cable length 5 m		
Cable length 10 m		
6 channel		
Cable length 5 m		
Cable length 10 m		
8 channel		
Cable length 5 m		
Cable length 10 m		
Note		

SAI-4/6/8-F IDC — 3-pole

Type	QTY	Order No.
SAI-4-F 3P IDC PUR 5M	1	1766720000
SAI-4-F 3P IDC PUR 10M	1	1766730000
SAI-6-F 3P IDC PUR 5M	4	1766740000
SAI-6-F 3P IDC PUR 10M	1	1766750000
SAI-8-F 3P IDC PUR 5M	1	1766760000
SAI-8-F 3P IDC PUR 10M	1	1766770000
Other versions on request		

SAI-4/6/8-F IDC — 4-pole

Type	QTY	Order No.
SAI-4-F 4P IDC PUR 5M	1	1766660000
SAI-4-F 4P IDC PUR 10M	1	1766670000
SAI-6-F 4P IDC PUR 5M	1	1766680000
SAI-6-F 4P IDC PUR 10M	1	1766690000
SAI-8-F 4P IDC PUR 5M	1	1766700000
SAI-8-F 4P IDC PUR 10M	1	1766710000
Other versions on request		

Technical data

Operating voltage	10...30 V
Current of continuous busbars	2 A
max. current-carrying capacity per slot	3 A
Total current	9 A
Pollution severity	2
Protection degree	IP 67
Ambient temperature range	-20...+80 °C
Housing main material	Pocan
Contact carrier material	PBT (UL 94 V0)
Base material of contacts	
screw socket	CuZn, nickel-plated
Housing colour	grey, RAL 7032
Flammability class UL 94	V-0
Clamping range of hood-version	
Suitable for dragline cable (fixed cable connection)	Yes

Wiring diagram

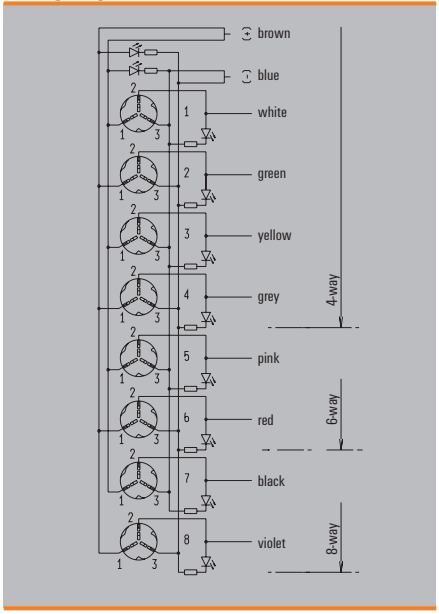

Wiring diagram

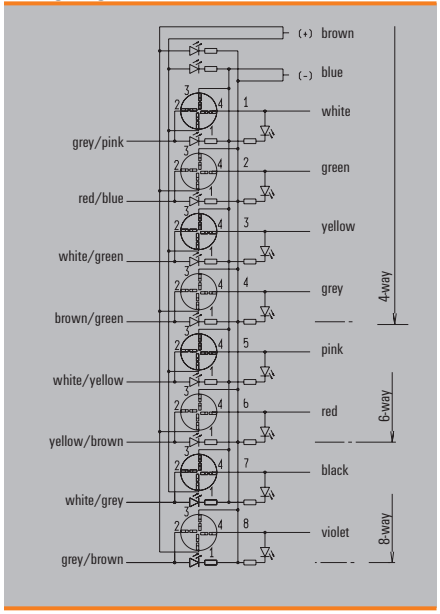

Fixed cable version, specifically designed for use in food processing equipment

SAI-8-F 5P M12 5M VA

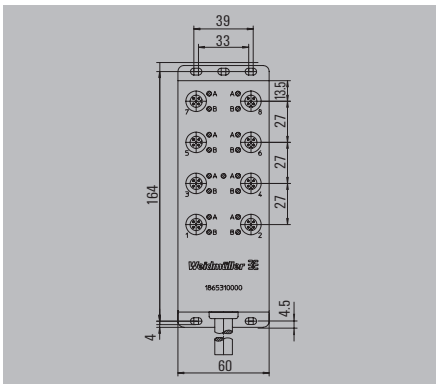

Ordering data

8 channel	
	Cable length 5 m
Note	

SAI-8-F 5P M12 5M VA		5-pole
Type	**QTY**	**Order No.**
SAI-8-F 5P M12 5M VA	1	**1865310000**

Technical data

Operating voltage	10...30 V
Current of continuous busbars	2 A
max. current-carrying capacity per slot	4 A
Total current	12 A
Pollution severity	3
Protection degree	IP 69K
Ambient temperature range	-25...+70 °C
Housing main material	Stainless steel
Contact carrier material	
Base material of contacts	CuZn, pre-nickeled, gold-plated
screw socket	stainless steel
Housing colour	Silver
Fire behaviour	V-0
Clamping range of hood-version	
Suitable for dragline cable (fixed cable connection)	Yes

Accessories include 4 protective covers for unused slots

Dimensioned drawing

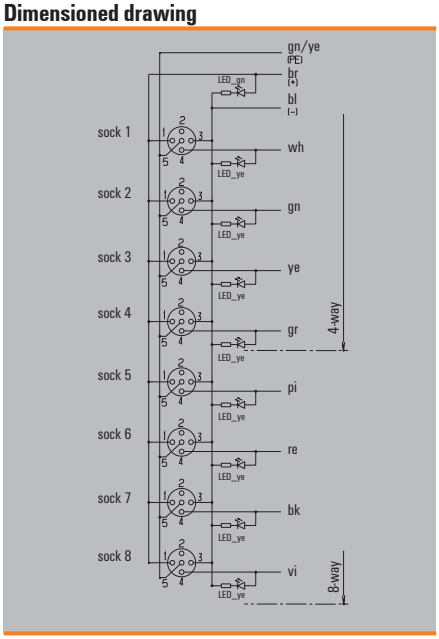

Tension-clamp connection M12, stainless steel

SAIS / SAIB VA

straight

Ordering data

Male		Type	QTY	Order No.
	5-pole. PG 9	SAIS 5/9-VA	1	1920700000
	5-pole. PG 9	SAIS 5/9-VA-B-COD	1	1920720000
Socket				
	5-pole. PG 9	SAIB 5/9-VA	1	1920710000
	5-pole. PG 9	SAIB 5/9-VA-B-COD	1	1920730000
Note				

Technical data

Type of connection	Tension clamp connection
Housing main material	1.4404/316L
Contact tube diameter	M12
Cable diameter	6...8 mm (PG9)
Wire cross-section, min. / max.	0.25...0.5 mm²
Rated current	4 A
Rated voltage	125 V
Temperature range of housing	-25...+85 °C
Protection degree	IP 69K
Contact surface	Gold-plated
Note	PB = PROFIBUS (B-COD)Torque, see E.12

Dimensioned drawing

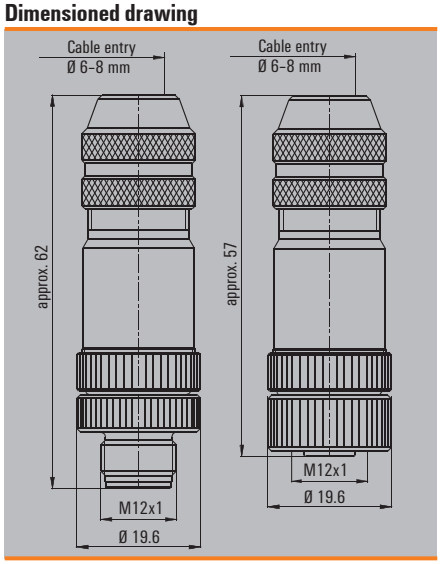

PB = PROFIBUS (B-COD)Torque, see E.12

Sensor-actuator distributors for special applications

All-metal
SAI-4/8-FMM M12

Shielded cable, e.g. for analogue initiators
Some applications need full shielding from sensor to control. This is possible with the all metal SAI distributors. The distributors are supplied with an EMC cable gland. Initiator LEDs are omitted.

Especially thick trunk cable
It is sometimes advisable to use the machine manufacturer's standard trunk cable. This cable will usually have a relatively large outside diameter and will therefore require plenty of space (SAI-4/6/8 MHD).

All-metal fixed cable distributors
Weidmüller metal distributors have proved their worth in many situations. They are available as 4 and 8 channel M12 versions with cable lengths of 5 or 10 m. Metal distributors are also necessary when ESD requirements must be complied with.
The conductive metal surface provides low surface resistance.

Advantages:
- No ESD/EMC problems
- High resistance to chemicals or mechanical loads
- Standard mounting dimensions

SAI-M with metal hood
SAI-4/6/8 MMS SAI-4/6/8 MM
MMS: **M**odular, **M**etal, **S**hield
MM: **M**odular, **M**etal

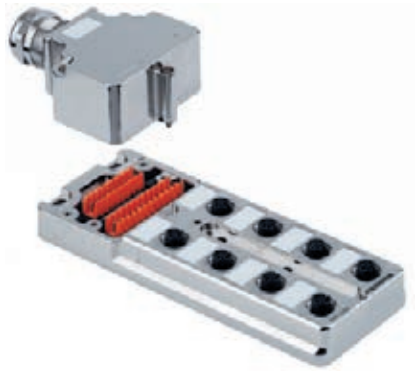

SAI-4/6/8 MMS with EMC cable gland in metal housing

For especially tough conditions where plastic is totally unsuitable. In certain cases it makes sense to avoid the use of plastics altogether. In such cases a distributor made completely from metal is required that can be connected to others using metal cable glands, without additional connections for the shielding.

SAI-4/6/8 MH
MH: **M**odular, **H**igh

Cable gland: M20

For cables with outside insulation diameter from 10 mm to 14 mm. Listed below are just some of the cable sizes that are suitable for the SAI distributor with M20 cable gland:
- 14 x 0.50 mm² to 16 x 0.50 mm²
- 8 x 0.75 mm² to 15 x 0.75 mm²
- 8 x 1.00 mm² to 10 x 1.00 mm²
- 5 x 1.50 mm² to 7 x 1.50 mm²

SAI-4/6/8 MHD
MHD: Modular, High, sealeD
(for especially thick cables)

Cable gland: M25

For cables with outside insulation diameter from 13 mm to 18 mm. Listed below are just some of the cable sizes that are suitable for the SAI distributor with M25 cable gland:
- 21 x 0.50 mm²
- 18 x 0.75 mm² to 21 x 0.75 mm²
- 14 x 1.00 mm² to 20 x 1.00 mm²
- 8 x 1.50 mm² to 16 x 1.50 mm²

Overview of metal distributors

Type	SAI-UT	Sockets	M12	Poles–Hood	Form	Cable gland	Cable gland	Length	Order No.
SAI-4-MH-4P M12	PBT	4	4	Zn-G	high	M20	plastic		**1705922000**
SAI-6-MH-4P M12	PBT	6	4	Zn-G	high	M20	plastic		**1705932000**
SAI-8-MH-4P M12	PBT	8	4	Zn-G	high	M20	plastic		**1705942000**
SAI-4-MH-5P M12	PBT	4	5	Zn-G	high	M20	plastic		**1701232000**
SAI-6-MH-5P M12	PBT	6	5	Zn-G	high	M20	plastic		**1701242000**
SAI-8-MH-5P M12	PBT	8	5	Zn-G	high	M20	plastic		**1701252000**
SAI-4-MHD-5P M12	PBT	4	5	Zn-G	high	M25	plastic		**1701233000**
SAI-6-MHD-5P M12	PBT	6	5	Zn-G	high	M25	plastic		**1701243000**
SAI-8-MHD-5P M12	PBT	8	5	Zn-G	high	M25	plastic		**1701253000**
SAI-4-MHD-4P M12	PBT	4	4	Zn-G	high	M25	plastic		**1705923000**
SAI-6-MHD-4P M12	PBT	6	4	Zn-G	high	M25	plastic		**1705933000**
SAI-8-MHD-4P M12	PBT	8	4	Zn-G	high	M25	plastic		**1705943000**
SAI-4-MMS-4P M12	Zn-G	4	4	Zn-G	low	M20	EMC		**1783540000**
SAI-8-MMS-4P M12	Zn-G	8	4	Zn-G	low	M20	EMC		**1783530000**
SAI-4-MMS-5P M12	Zn-G	4	5	Zn-G	low	M20	EMC		**1783520000**
SAI-8-MMS-5P M12	Zn-G	8	5	Zn-G	low	M20	EMC		**1783510000**
SAI-4-MM-5P M12	Zn-G	4	5	Zn-G	low	M20	brass		**1783500000**
SAI-8-MM-5P M12	Zn-G	8	5	Zn-G	low	M20	brass		**1783490000**
SAI-4/6/8 MH-MH BL 3.5				Zn-G	high	M20	plastic		**1724752000**
SAI-4/6/8 MH-MHD BL 3.5				Zn-G	high	M25	plastic		**1724753000**
SAI-8-MH-5P M12 ZF III	PBT	8	5	Zn-G	high	M20	plastic		**1782760000**
SAI-8-MMS-5P M12 ZF III	Zn-G	8	5	Zn-G	high	M20	plastic		**1782740000**
SAI-4/6/8 MH-MH BL-ZF 3.5				Zn-G	high	M20	plastic		**1782750000**
SAI-4-FMM-4P M12 5M	Zn-G	4	4					5 m	**9456190002**
SAI-4-FMM-4P M12 10M	Zn-G	4	4					10 m	**9456200002**
SAI-8-FMM-4P M12 5M	Zn-G	8	4					5 m	**9456750002**
SAI-8-FMM-4P M12 10M	Zn-G	8	4					10 m	**9456760002**

Note: The cable outside diameter can vary from manufacturer to manufacturer. It is therefore possible that the cable glands hold other cables firmly despite a different strand lay-up.
In each case, it is best to first measure the cable diameter and then choose an appropriate distributor.

Fixed cable version

SAI-4-FMM

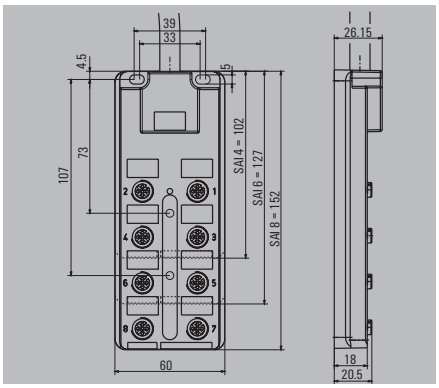

Ordering data

SAI-4-FMM		4-pole
Type	**QTY**	**Order No.**
4 channel		
SAI-4-FMM-4P M12 5M	4	9456190002
SAI-4-FMM-4P M12 10M	3	9456200002
8 channel		
SAI-8-FMM-4P M12 5M	1	9456750002
SAI-8-FMM-4P M12 10M	3	9456760002
Note		
Additional variants on request Bus cable is not shielded		

Technical data

Operating voltage	10...30 V
Current of continuous busbars	2 A
max. current-carrying capacity per slot	3 A
Total current	9 A
Pollution severity	3
Protection degree	IP 68
Ambient temperature range	-20...+90 °C
Housing main material	CuZn, nickel-plated
Contact carrier material	PBT (UL 94 V0)
Base material of contacts	CuZn, pre-nickeled, gold-plated
screw socket	CuZn, nickel-plated
Housing colour	Silver
Flammability class UL 94	V-0
Clamping range of hood-version	
Suitable for dragline cable (fixed cable connection)	Yes

Dimensioned drawing

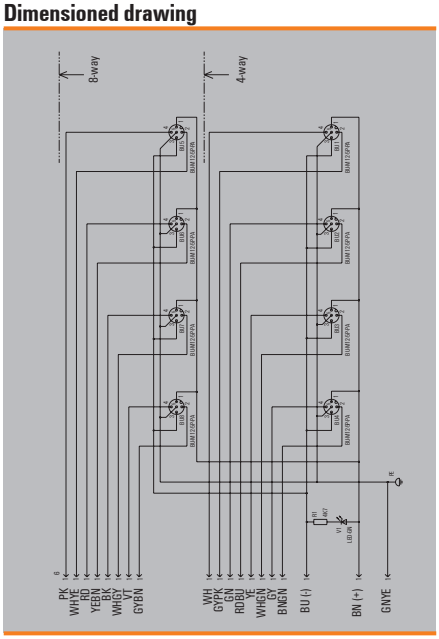

Hood version

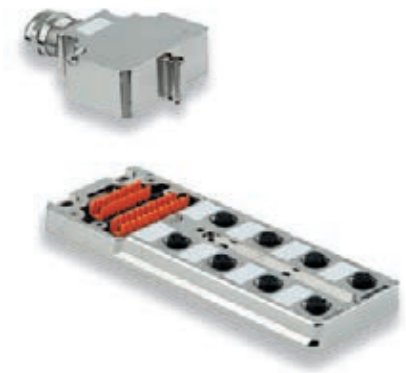

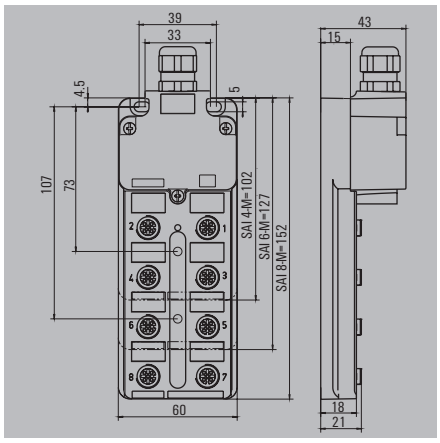

Ordering data

Complete modules,4-pole		SAI-4/6/8-MMS		M12	SAI-4/6/8-MM		M12
		Type	QTY	Order No.	Type	QTY	Order No.
	4 channel	SAI-4-MMS 4P M12	1	1783540000			
	8 channel	SAI-8-MMS 4P M12	1	1783530000			
Complete modules,5-pole							
	4 channel	SAI-4-MMS 5P M12	1	1783520000	SAI-4-MM 5P M12	1	1783500000
	8 channel	SAI-8-MMS 5P M12	1	1783510000	SAI-8-MM 5P M12	1	1783490000
Tension-clamp connection,high cover	8 channel				SAI-8-MMH 5P M12 ZF	1	1782740000
Base unit							
	8 channel				SAI-8-MM 5P M12 UT	2	1783491000
Mounting hood							
	Screw connection	SAI-4/6/8 MH-MM BL 3.5	1	1724754000	SAI-4/6/8 MH-MM BL 3.5	1	1724754000
Note		With EMC cable gland			MM without initiator LED and with standard metal cable gland		

Technical data

Operating voltage	10...30 V
Current of continuous busbars	2 A
max. current-carrying capacity per slot	3 A
Total current	10 A
Pollution severity	3
Protection degree	IP 68
Ambient temperature range	-20...+90 °C
Housing main material	CuZn, nickel-plated
Contact carrier material	PBT (UL 94 V0)
Base material of contacts	CuZn, pre-nickeled, gold-plated
screw socket	CuZn, nickel-plated
Housing colour	Silver
Flammability class UL 94	V-0
Clamping range of hood-version	0.08...1.5 mm²
Suitable for dragline cable (fixed cable connection)	
Complete shielding transmission via the housing	

Wiring diagram

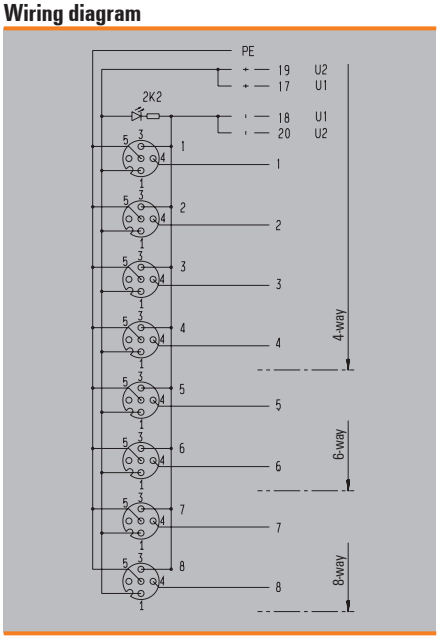

Wiring diagram

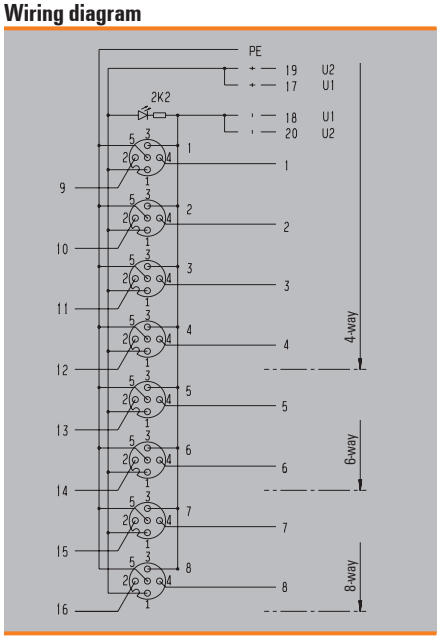

Hood version with M20 outlet

For cables with 10-14 mm outer diameter

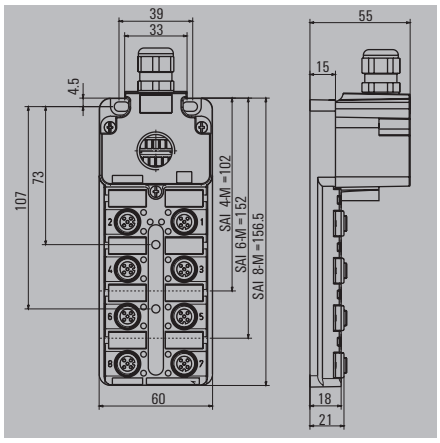

Ordering data

Complete modules		SAI-4/6/8-MH 4-pole		SAI-4/6/8-MH 5-pole	
		Type	QTY	Type	QTY
	4 channel	SAI-4-MH-4P M12	1	SAI-4-MH-5P M12	1
	6 channel	SAI-6-MH-4P M12	1	SAI-6-MH-5P M12	1
	8 channel	SAI-8-MH-4P M12	1	SAI-8-MH-5P M12	1
Tension-clamp connection	8 channel			SAI-8-MH-5P M12 ZF III	1
Mounting hood					
	Tension-clamp connection	SAI-4/6/8 MH MH BLZF3,5	1	SAI-4/6/8 MH MH BLZF3,5	1
	Screw connection	SAI-4/6/8 MH-MH BL 3.5	1	SAI-4/6/8 MH-MH BL 3.5	1
Note		Other versions on request		Other versions on request	

Type	Order No. (4-pole)	Order No. (5-pole)
SAI-4-MH-4P M12	1705922000	1701232000
SAI-6-MH-4P M12	1705932000	1701242000
SAI-8-MH-4P M12	1705942000	1701252000
SAI-8-MH-5P M12 ZF III		1782760000
SAI-4/6/8 MH MH BLZF3,5	1782750000	1782750000
SAI-4/6/8 MH-MH BL 3.5	1724752000	1724752000

Technical data

Operating voltage	10...30 V
Current of continuous busbars	2 A
max. current-carrying capacity per slot	3 A
Total current	10 A
Pollution severity	3
Protection degree	IP 68
Ambient temperature range	-20...+90 °C
Housing main material	CuZn, nickel-plated
Contact carrier material	PBT (UL 94 V0)
Base material of contacts	CuZn, pre-nickeled, gold-plated
screw socket	CuZn, nickel-plated
Housing colour	Silver
Flammability class UL 94	V-0
Clamping range of hood-version	0.08...1.5 mm²
Suitable for dragline cable (fixed cable connection)	

With dual power supply: 2x8 = 16 A total current
Clamping range up to 2.5 mm² with screw connection

Wiring diagram

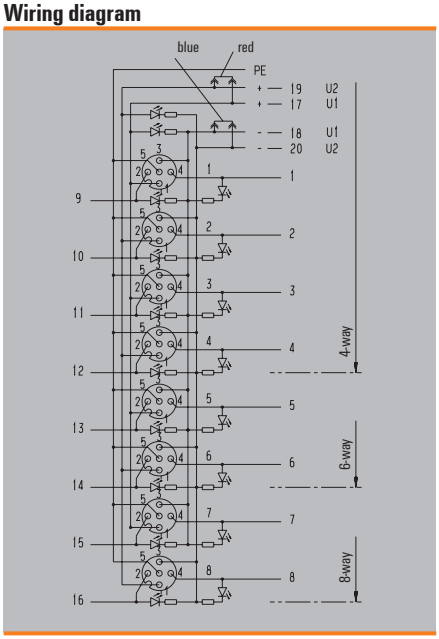

Wiring diagram

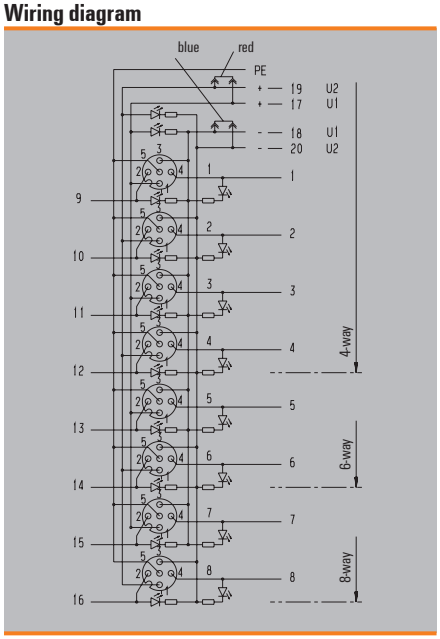

Hood version with M25 outlet

For cables with 13-18 mm outer diameter

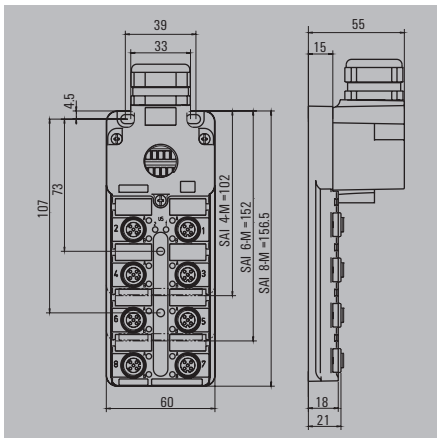

Ordering data

Complete modules		
4 channel		
6 channel		
8 channel		
Mounting hood		
Screw connection		
Note		

SAI-4/6/8-MHD — 4-pole

Type	QTY	Order No.
SAI-4-MHD-4P M12	1	1705923000
SAI-6-MHD-4P M12	1	1705933000
SAI-8-MHD-4P M12	1	1705943000
SAI-4/6/8 MH-MHD BL 3.5	1	1724753000

Other versions on request

SAI-4/6/8-MHD — 5-pole

Type	QTY	Order No.
SAI-4-MHD-5P M12	1	1701233000
SAI-6-MHD-5P M12	1	1701243000
SAI-8-MHD-5P M12	1	1701253000
SAI-4/6/8 MH-MHD BL 3.5	1	1724753000

Other versions on request

Technical data

Operating voltage	10...30 V
Current of continuous busbars	2 A
max. current-carrying capacity per slot	3 A
Total current	10 A
Pollution severity	3
Protection degree	IP 68
Ambient temperature range	-20...+90 °C
Housing main material	CuZn, nickel-plated
Contact carrier material	PBT (UL 94 V0)
Base material of contacts	CuZn, pre-nickeled, gold-plated
screw socket	CuZn, nickel-plated
Housing colour	Silver
Flammability class UL 94	V-0
Clamping range of hood-version	0.08...1.5 mm²
Suitable for dragline cable (fixed cable connection)	

With dual power supply: 2x8 = 16 A total current
Clamping range up to 2.5 mm² with screw connection

Wiring diagram

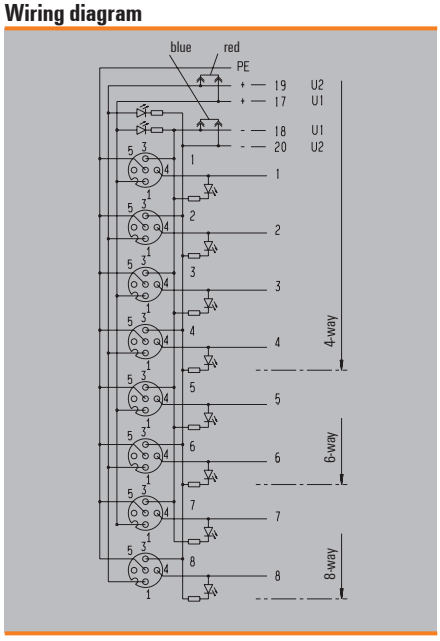

Wiring diagram

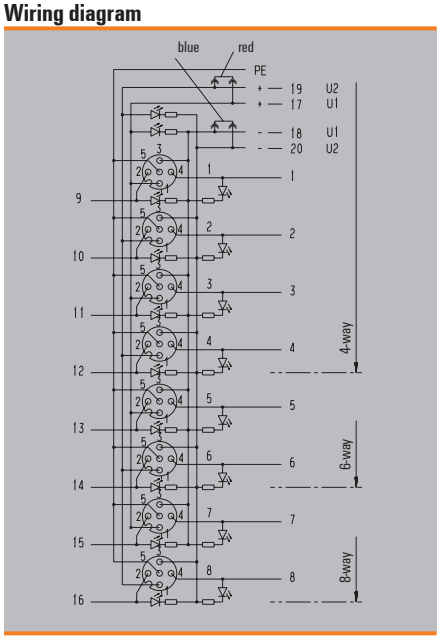

For switching with five no-voltage contacts in an M12 without LED

with hood

Emergency stop wiring

Sometimes a machine builder will need more than two floating contacts in one M12 plug-in connector. This is the case, for example, in the wiring for some "emergency stop" circuits. It was for this application that Weidmüller developed the 1:1 SAI distributor.

This SAI distributor has four M12 plug-in connectors with five floating contacts in one socket connector. The distributor is supplied complete with hood.

When connecting PT100 3- and 4-conductor initiators, we recommend the new shielded metal version. If you need other circuit configurations, simply contact us.

Note: This distributor should not be used as the base module for active bus distributors.

base element

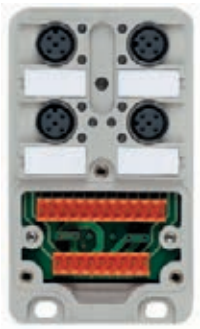

Wiring diagram

Socket	Contact	BL 3.5 contact
1	1	1
1	2	2
1	3	3
1	4	4
1	5	5
2	1	6
2	2	7
2	3	8
2	4	9
2	5	10
3	1	11
3	2	12
3	3	13
3	4	14
3	5	15
4	1	16
4	2	17
4	3	18
4	4	19
4	5	20
–	–	21

metal

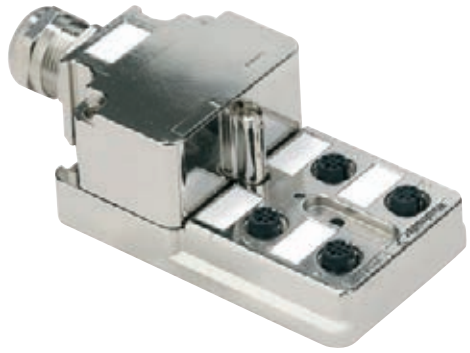

Technical data

Current per channel	2 A
Total current	8 A
LEDs	No LEDs are integrated at any point.

Ordering data

Type	Qty.	Order No.
SAI-4-M 5P M12 1:1 (plastic hood)	1	1806010000
Base element (plastic)	1	1806011000
SAI-4-MMS 5P M12 1:1 (metal hood)	1	1897680000

SAI distributor with 8 poles per M12

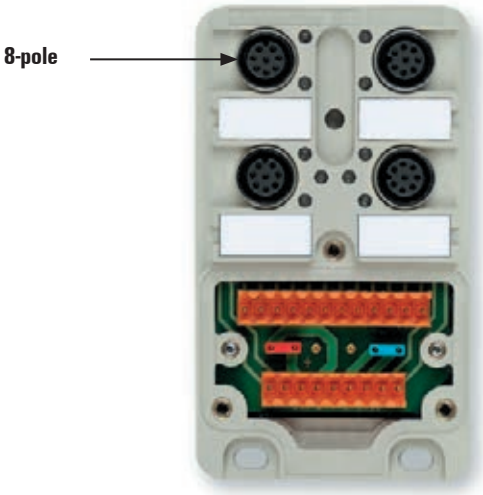

Applications

This distributor can be used both as a base module for satellite solutions (SAI-Combi) and for connecting sensors/units with more than two contacts.

SAI-Combi

A sub-distribution board can be connected to every M12 with the help of the SAI-4-M 8P in conjunction with the SAI Active bus hood. This SAI should then be a 4-channel distributor with one channel per socket. The SAI-4-M 4P M12 is particularly suitable.
Part No. **1705920000.**

Sensors, units with more than two signals in one line

As one socket in this module contains four signal paths and, in addition, two +, two – and one PE, components with more than two signal lines can be connected to this module. Eight-pole connecting cables are available on request.

Wiring

M12 socket	M12 contact	BL 3.5 connection	PLC input	Supply
1	1	1	E0.0	
1	2	3	E0.1	
1	3	5	E0.2	
1	4	7	E0.3	
2	1	2	E0.4	
2	2	4	E0.5	
2	3	6	E0.6	
2	4	8	E0.7	
3	1	9	E1.0	
3	2	11	E1.1	
3	3	13	E1.2	
3	4	15	E1.3	
4	1	10	E1.4	
4	2	12	E1.5	
4	3	14	E1.6	
4	4	16	E1.7	
1/3	5	17		24 V
2/4	5	19		24 V
1/3	6/7	18		0 V
2/4	6/7	20		0 V
1/2/3/4	8	PE		PE

The jumpers in the distributor enable the potentials of 17 and 19 or 18 and 20 to be bridged Contacts 6 and 7 are bridged in the 8-pole M12 in order to increase the current-carrying capacity. total current per M12: 2 A,
signal current per pin: 1 A

Ordering data

Type	Qty.	Order No.
Complete module: SAI-4-M 8P M12	1	**1807640000**
Base separate: SAI-4-M M12 UT	1	**1807641000**
Matching hood passive: SAI-4/6/8-MH-BL3.5	1	**1724750000**

Technical information: The distributor does not include any signalling LEDs.
Supply LEDs and electrical isolation are provided

Fixed cable version

Fixed cable version

This distributor includes the option of attaching either a PNP sensor or an NPN sensor with 2 or 3 conductor connection to an M12 socket.

Eight inputs are available in total. In the case of a switched sensor, a + signal on the corresponding wire is connected through and the appropriate LED is illuminated.

The upper LED "N" is illuminated for NPN sensors and the lower LED "P" for PNP sensors. Do not connect a T-piece to the M12 socket.

The existing M12 plug-in connectors are wired in such a manner that the PNP sensor can be connected to pin 4 and the NPN sensor to pin 2.

The distributor has eight channels and 5 m of cable. Other versions are also available.

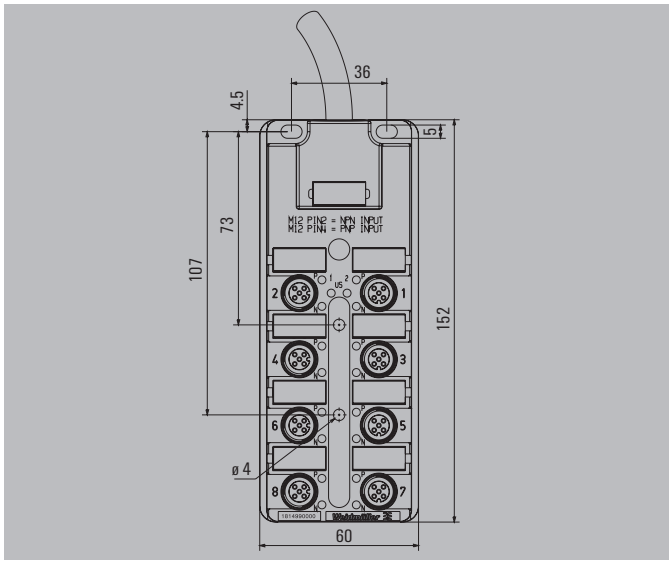

Pin assignment

M12 socket	Pin	Function	Pin	Function	Output	Wire colour	Wire size
1	4	PNP	2	NPN	1	white	0.34 mm²
2	4	PNP	2	NPN	2	green	0.34 mm²
3	4	PNP	2	NPN	3	yellow	0.34 mm²
4	4	PNP	2	NPN	4	grey	0.34 mm²
5	4	PNP	2	NPN	5	pink	0.34 mm²
6	4	PNP	2	NPN	6	red	0.34 mm²
7	4	PNP	2	NPN	7	black	0.34 mm²
8	4	PNP	2	NPN	8	violet	0.34 mm²
all	1	24 V DC				brown	0.75 mm²
all	3	0 V DC				blue	0.75 mm²
all	5	PE				green/yellow	0.75 mm²

M12 sockets

Pin 1 = +24 V DC
Pin 2 = NPN Input
Pin 3 = 0 V DC
Pin 4 = PNP Input
Pin 5 = PE

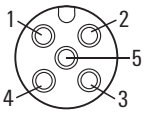

Technical data

Operating voltage	24 V DC ±20 %
Operation temperature	0...80 °C
Storage temperature	-25...80 °C
Ingress protection class	IP 68
PUR cable	5 m
Max. no-load current for 2-wire NPN sensors	2 mA DC

Wiring diagram (schematic)

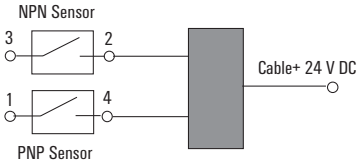

Ordering data

Type	Qty.	Order No.
SAI-8-F 5P NPN-PNP 5M	1	1814990000

Panel feed-through

SAI-8-B 5P M12 SL

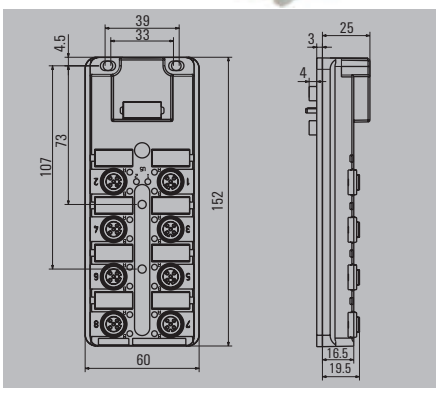

Ordering data

SAI-8-B 5P M12 SL		5-pole
Type	**QTY**	**Order No.**
SAI-8-B 5P M12 SL	1	**1847560000**
BL 3.5 connector included in delivery		

Note

Technical data

Operating voltage	10...30 V
Current of continuous busbars	2 A
max. current-carrying capacity per slot	3 A
Total current	10 A
Pollution severity	3
Protection degree	IP 65
Ambient temperature range	-20...+90 °C
Housing main material	Pocan
Contact carrier material	PBT (UL 94 V0)
Base material of contacts	CuZn, pre-nickeled, gold-plated
screw socket	CuZn, nickel-plated
Housing colour	grey, RAL 7032
Flammability class UL 94	V-0
Clamping range of hood-version	0.08...1.5 mm²
Suitable for dragline cable (fixed cable connection)	

Dimensioned drawing

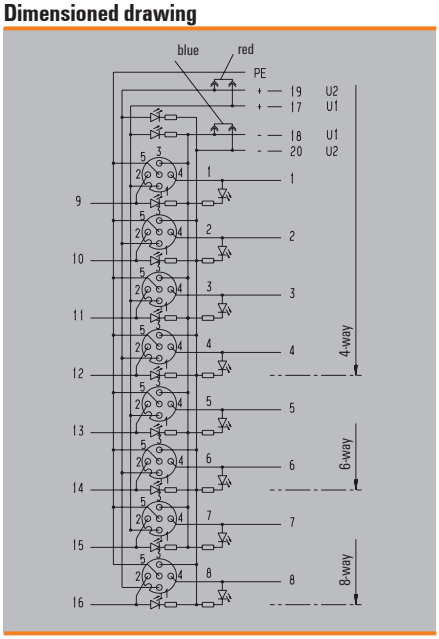

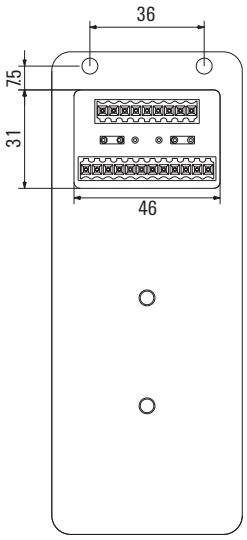

Overview

Distributors for system cabling

On site distribution is becoming more important. For example, in some places the IP 20 I/O module has to be mounted in housings directly on the machine. This is where a simplified form of wiring is essential.

Weidmüller now offers two simple solutions

- A distributor equipped at the rear with a standardised ribbon cable connector, which is compatible with the Weidmüller PLC system interface.
- Weidmüller also offers a unique solution for feeding bus cables through panels that can be plugged in from both sides.

Advantages

- Sensors and actuators can be plugged in from outside
- Through-panel version can be mounted in cut outs in steel panels
- Standardised ribbon cable connector inside
- Plus: M12 through-panel feed that can be plugged in from both sides

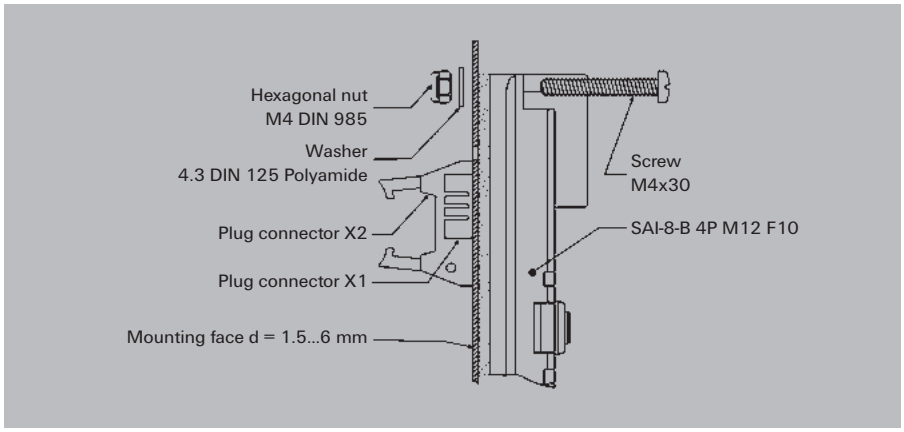

Drilling template

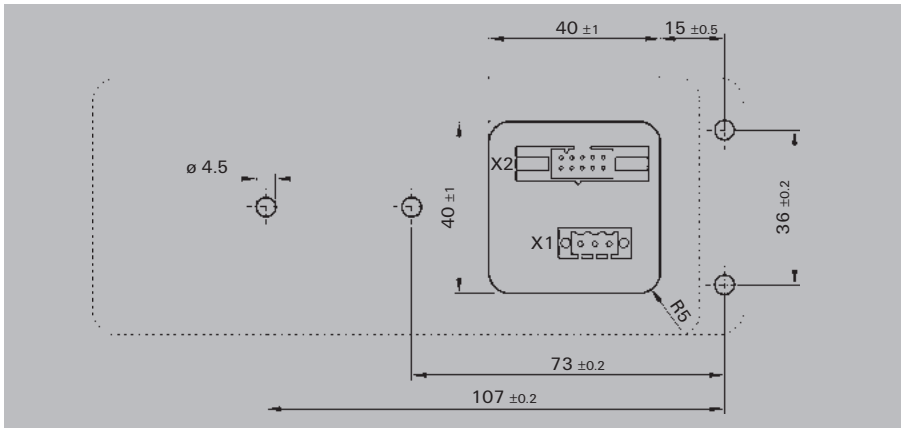

Advantages of system cabling

Fast

- Time saving installation
- Reduces commissioning and trouble-shooting times
- On site wiring cuts wiring costs

Safe

- Reduces installation errors
- Using system cables instead of individual wires improves clarity in control cabinets
- Direct marking corresponding to the PLC

Variability

- Additional I/O modules available
- Cable length options
- Easy replacement of I/O interfaces provides flexibility

Contact assignment
Male connector X1

M12 socket		Male connector X1
1 ... 8	Pin 1	U +
1 ... 8	Pin 3	U –
1 ... 8	Pin 5	PE

Male connector X1

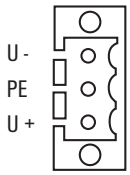

M12 socket

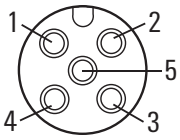

Contact assignment
Male connector X2

M12 socket		Male connector X2
1	Pin 4	1
2	Pin 4	2
3	Pin 4	3
4	Pin 4	4
5	Pin 4	5
6	Pin 4	6
7	Pin 4	7
8	Pin 4	8
1 – 8	Pin 1	9
1 – 8	Pin 3	10

Male connector X2

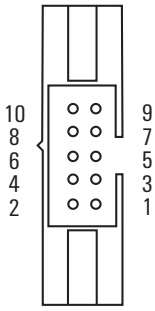

Note:
You will find further products for Interface units and PLC solutions in the Electronic catalogue 4.5.

Technical data

Operating voltage	10 – 30 V (DC)
Outputs	max. 1 A per channel / max. 8 A in total
Inputs	max. 1 A in total
Mounting conditions	
Mounting surface	sheet steel, flat, min. 1.5 mm thick, or panels with at least equivalent stability, max. 6 mm thick
Surface temperature	max. 40 °C
Ingress protection class	IP 67/IP 68 only in conjunction with control cabinets with equivalent class of protection
Fixings	4 screws + washers + nuts / torque: 0.8 Nm
Note:	Connect the male connector 3.5 (X1) when using actuators

Ordering data

	Type	Qty.	Order No.
Distributor	SAI-8-B 4P M12 F10	1	1812170000
Male connector X1	BL 3.50/07/180 SN DKGN BX	50	1606530000

Pre-assembled hood version

In some cases, it can be advantageous to receive the hoods in pre-assembled form.
Here MF means: basic modules are supplied along with assembled hoods.
Here MHF are the assembled hoods only.
The wire cross-sections are 3 x 1 mm² and n x 0.34 mm². The quality of conduction is identical to that of fixed cable distributors.
Technical data can be found on pages W.2 and W.9

SAI distributor with pre-assembled hood
Colour-coded cable

Ordering data — 4-pole

Type	Length	Order No.
8-channel		
SAI-8-MF 4P PUR 5M	5 m	1799960000
SAI-8-MF 4P PUR 10M	10 m	1789190000

Ordering data — 5-pole

Type	Length	Order No.
4-channel		
SAI-4-MF 5P PUR 5M	5 m	1804600000
SAI-4-MF 5P PUR 10M	10 m	1804580000
8-channel		
SAI-8-MF 5P PUR 5M	5 m	1804590000
SAI-8-MF 5P PUR 10M	10 m	9457430000
8-channel, without initiator LED		
SAI-8-MF 5P PUR 5M OL	5 m	9457350000

Pre-assembled hood
Colour-coded cable

Ordering data — 4-pole

Type	Length	Order No.
SAI-4/6/8-MHF 4P PUR 4M	4 m	1791450400
SAI-4/6/8-MHF 4P PUR 6M	6 m	1791450600
SAI-4/6/8-MHF 4P PUR 9M	9 m	1791450900
SAI-4/6/8-MHF 4P PUR14M	14 m	1791451400
SAI-4/6/8-MHF 4P PUR20M	20 m	1791452000
SAI-4/6/8-MHF 4P PUR28M	28 m	1791452800
SAI-4/6/8-MHF 4P PUR34M	34 m	1791453400

Matching base module

Type	Qty.	Order No.
SAI-4-M-4PM12UT	1	1705921000
SAI-6-M-4PM12UT	1	1705931000
SAI-8-M-4PM12UT	1	1705941000

Pre-assembled hood

Ordering data — 5-pole

Type	Length	Order No.
SAI-4/6/8-MHF 5P PUR 4M	4 m	1791460400
SAI-4/6/8-MHF 5P PUR 6M	6 m	1791460600
SAI-4/6/8-MHF 5P PUR 9M	9 m	1791460900
SAI-4/6/8-MHF 5P PUR14M	14 m	1791461400
SAI-4/6/8-MHF 5P PUR16M	16 m	1791461600
SAI-4/6/8-MHF 5P PUR20M	20 m	1791462000
SAI-4/6/8-MHF 5P PUR28M	28 m	1791462800
SAI-4/6/8-MHF 5P PUR34M	34 m	1791463400
SAI-4/6/8-MHF 5P PUR40M	40 m	1791464000
SAI-4/6/8-MHF 5P PUR50M	50 m	1791465000
SAI-4/6/8-MHF 5P PUR55M	55 m	1791465500

Matching base module

Type	Qty.	Order No.
SAI-4-M-5PM12UT	1	1701231000
SAI-6-M-5PM12UT	1	1701241000
SAI-8-M-5PM12UT	1	1701251000

Protective cap for hooded distributor, empty,
Terminal rail foot for distributor

SAI-4/6/8-MH LEER

SAI-TS35 MF

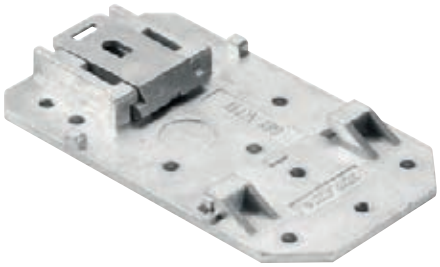

Ordering data

Mounting hood	
	Empty
Note	

SAI-4/6/8-MH LEER — **4-pole**

Type	QTY	Order No.
SAI-4/6/8-MH LEER	1	1783460000

Type	QTY	Order No.
SAI-TS35 MF	1	1917400000

Dimensioned drawing

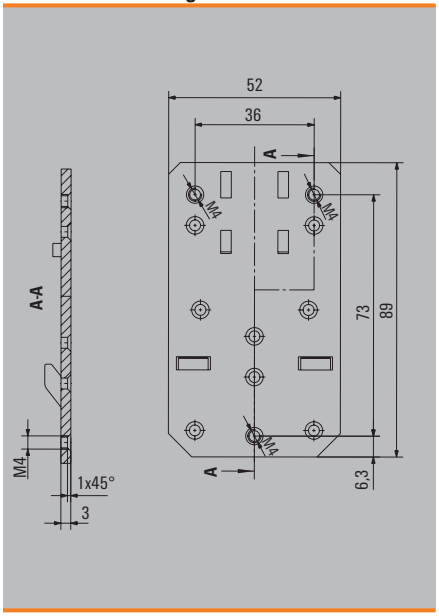

SAI-M8

Weidmüller offers two different series for the M8 range. Both of these series offer key advantages: while one is optimised for size, the other has a patented shape and protected design that make it easy to handle. The SAI M8 product line is available with up to 12 plug in slots (as a fixed-cable version) and with up to 10 plug-in slots (as a pluggable version). The housings can be screwed on from the side or from the top which makes them more versatile. They are durable and well-sealed with a sturdy, fully encapsulated construction.

These single row distributors are easy to handle; their compact shape makes them one of the smallest product solutions available on the market. The hooded distributor is a favourite from the line or ergonomic distributors (also nicknamed the hedgehog distributor). The cable outlet is customisable and can exit from the top or from the back. These distributors are also fully encapsulated.

Easily accessible

The side-mounted M8 connector ensures very convenient handling

Directly on the PCB

Custom versions are also available. This is the PCB connection module.

Space-saving

The line version has a very small size.

Overview

Fixed cable version

Hood version

M23 version

Compact dimensions, readily accessible M8 connections, eye-catching design

The unconventional design of this generation of SAI M8 distributors catches the eye immediately. Their shape is helpful because in this patented design the sockets are no longer arranged in simple rows. Instead, some are on 45° bevelled surfaces. That considerably improves the accessibility of the screw connections for the sensor and actuator cables. Ease of use, compact dimensions and the eye catching design are the obvious advantages of this M8 generation.

The following variations are available:

- SAI M8 distributor with removable connection hood; the bus cable can be connected either vertically or horizontally
- SAI M8 distributor with permanently attached, pre-assembled bus cable, 5 or 10 m long; this version is particularly slim and is therefore ideal for mounting in confined spaces
- SAI M8 distributor with metal plated M23 thread

SAI-M8-Line

M8 distributor with M12 outlet

M8 distributor line / fixed-cable version

M8 distributor with solder pins

Extra-narrow M8 distributor for confined spaces

Single-row M8 distributors are the smallest sensor-actuator modules currently available with this thread size and it is precisely their size that is a decisive factor for applications and this form has become very popular. It is important to maintain the widest possible range of options. The SAI-M8-Line products can provide many interesting solutions:

- 4 and 6 channel modules with 8-pole M12 bus connection
- 8 and 10 channel modules with 12-pole bus connection
- 4, 10 and 12 channel distributors with fixed cable connection, the 4 and 8 channel modules also with 4 poles

It is important to note that the distributors can be labelled with the same markers as the Weidmüller 5 mm modular terminals. Therefore, no new tags have to be introduced. The modules can also be mounted sideways and are completely encapsulated.

Consequently, Weidmüller SAI distributors represent stability, robustness, flexibility and compactness - all in a single unit.

PCB version of a complete SAI distributor

During the design of PCBs, it is often necessary to plug in different external data lines. There are a variety of connectors available for this purpose. For machine construction, the M8 and M12 connectors have become established as the standard solutions for sensor and actuator wiring. When attempting to mount these PCB-type connectors to the PCB, there is a significant risk that they will not be firmly attached to the board. Now, the SL version of the SAI distributor series solves this problem. The distributor can be completely mounted onto a PCB. It features soldering pins for the electrical connection to the PCB. The distributor itself should be slightly raised up during assembly by means of washers. This provides some clearance under the box. Naturally, the power supply channels are bridged in the distributor. This saves space on the PCB since there is no need for holes on any assembly surface. Thus the reverse side can be used for other purposes.

Hooded/fixed cable version

SAI-4/8-M

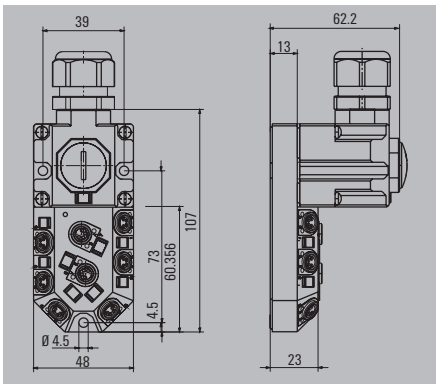

SAI-4/8-F

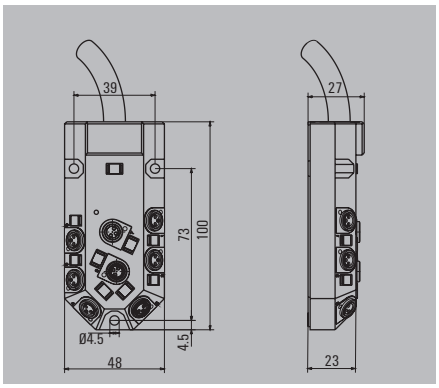

Ordering data

3-pole		SAI-4/8-M		M8
		Type	QTY	Order No.
Cable length 5 m (with fixed cable version)	4 channel	SAI-4-M 3P M8	1	1784680000
	8 channel	SAI-8-M 3P M8	1	1784670000
Cable length 10 m (with fixed cable version)	4 channel			
	8 channel			
4-pole				
Cable length 5 m (with fixed cable version)	4 channel	SAI-4-M 4P M8	1	1784700000
	8 channel	SAI-8-M 4P M8	1	1784690000
Cable length 10 m (with fixed cable version)	4 channel			
	8 channel			
Note		Other versions on request		

		M8
Type	QTY	Order No.
SAI-4-F 3P M8 PUR 5M	1	1784640000
SAI-8-F 3P M8 PUR 5M	1	1784620000
SAI-4-F 3P M8 PUR 10M	1	1784630000
SAI-8-F 3P M8 PUR 10M	1	1784610000
SAI-4-F 4P M8 PUR 5M	1	1784600000
SAI-8-F 4P M8 PUR 5M	1	1784580000
SAI-4-F 4P M8 PUR 10M	1	1784590000
SAI-8-F 4P M8 PUR 10M	1	1784570000
Other versions on request		

Technical data

Operating voltage	10...30 V
Current of continuous busbars	2 A
max. current-carrying capacity per slot	2 A
Total current	8 A
Pollution severity	3
Protection degree	IP 68
Ambient temperature range	-20...+80 °C
Housing main material	Pocan
Contact carrier material	PBT (UL 94 V0)
Base material of contacts	CuZn, pre-nickeled, gold-plated
screw socket	CuZn, nickel-plated
Housing colour	grey, RAL 7032
Flammability class UL 94	V-0
Clamping range of hood-version	0.08...1 mm²
Suitable for dragline cable (fixed cable connection)	Yes

Dimensioned drawing

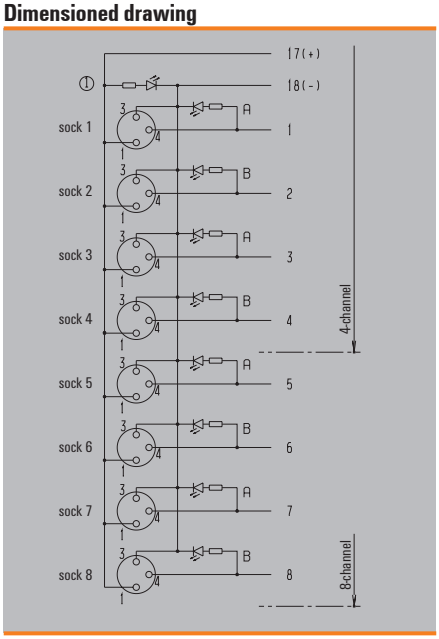

Dimensioned drawing

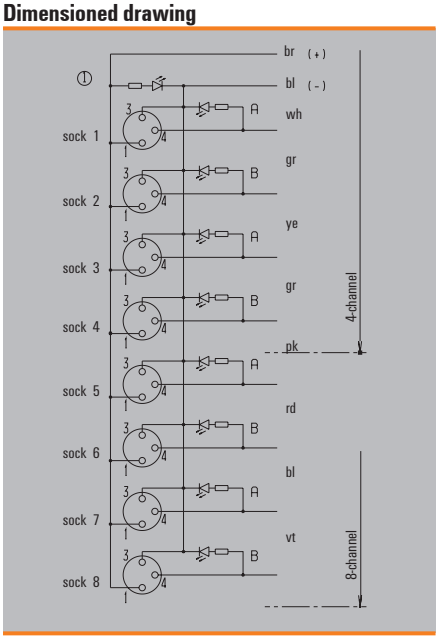

With M23/ M16 outlet

SAI-4/8-M23

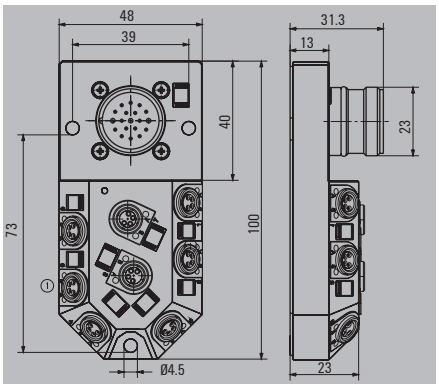

SAI-8-M16

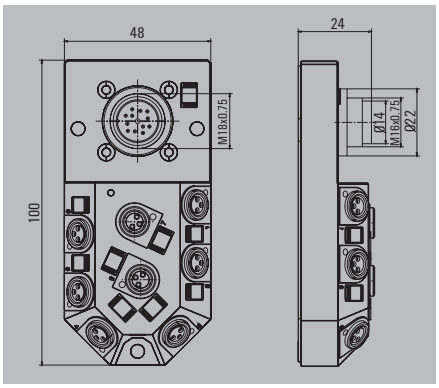

Ordering data

3-pole		SAI-4/8-M23	M23
		Type	**QTY**	**Order No.**
	8 channel			
4-pole				
	4 channel	SAI-4-M23 4P M8	1	**1784660000**
	8 channel	SAI-8-M23 4P M8	1	**1784650000**
Note		Other versions on request		

	M16
Type	**QTY**	**Order No.**
SAI-8-M16 3P M8	1	**1795900000**
Other versions on request		

Technical data

Operating voltage	10...30 V
Current of continuous busbars	2 A
max. current-carrying capacity per slot	2 A
Total current	8 A
Pollution severity	3
Protection degree	IP 68
Ambient temperature range	-20...+90 °C
Housing main material	Pocan
Contact carrier material	PBT (UL 94 V0)
Base material of contacts	CuZn, pre-nickeled, gold-plated
screw socket	CuZn, nickel-plated
Housing colour	grey, RAL 7032
Flammability class UL 94	V-0
Clamping range of hood-version	
Suitable for dragline cable (fixed cable connection)	

Dimensioned drawing

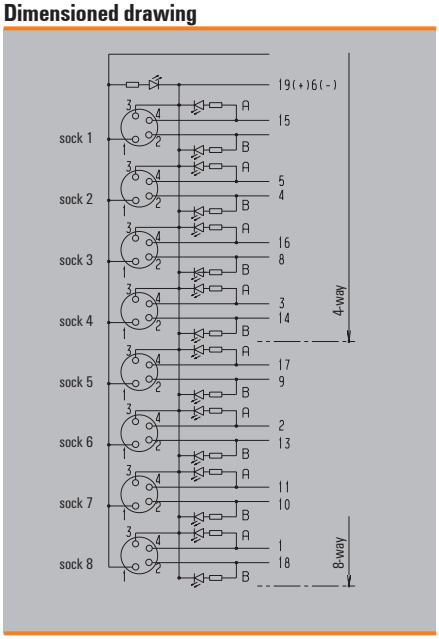

Dimensioned drawing

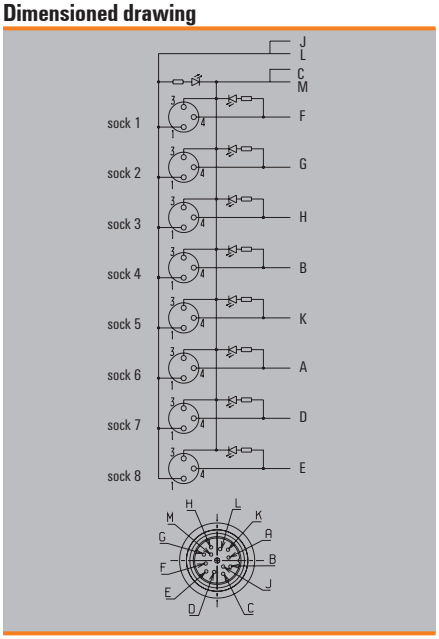

Line

SAI-4/6-S

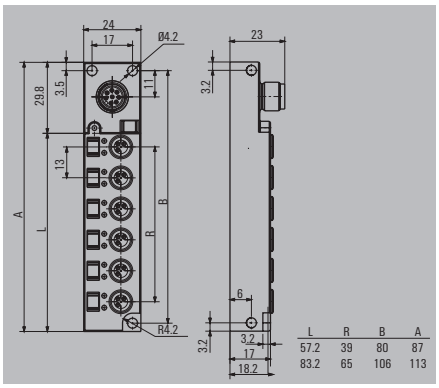

SAI-5/8-S

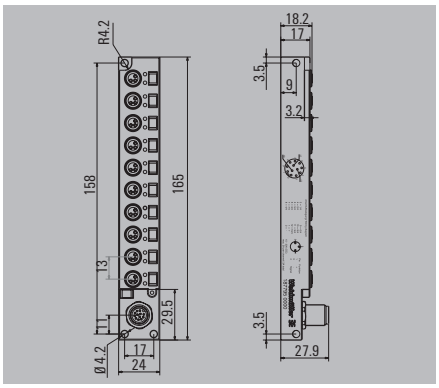

Ordering data

3-pole		SAI-4/6-S		M12
		Type	QTY	Order No.
4 channel		SAI-4-S 3P M8 L	1	1828740000
6 channel		SAI-6-S 3P M8 L	1	1828730000
8 channel				
10 channel				
3-pole without LED				
4 channel		SAI-4-S 3P M8 L OL	1	1051760000
6 channel		SAI-6-S 3P M8 L OL	1	1932380000
Note		Other versions on request		

		M12
Type	QTY	Order No.
SAI-8-S12 3P M8 L	1	1871680000
SAI-10-S12 3P M8 L	1	1877950000

Technical data

Operating voltage	10...30 V
Current of continuous busbars	1 A
max. current-carrying capacity per slot	2 A
Total current	6 A
Pollution severity	3
Protection degree	IP 68
Ambient temperature range	-25...+80 °C
Housing main material	Pocan
Contact carrier material	PBT (UL 94 V0)
Base material of contacts	CuZn, pre-nickeled, gold-plated
screw socket	CuZn, nickel-plated
Housing colour	grey, RAL 7032
Flammability class UL 94	V-0
Clamping range of hood-version	
Suitable for dragline cable (fixed cable connection)	Yes

Dimensioned drawing

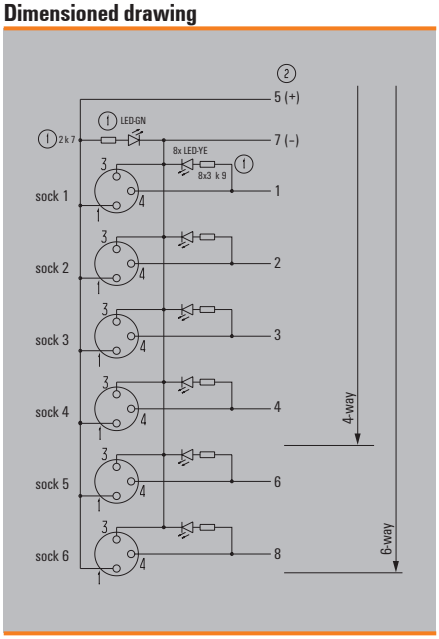

Dimensioned drawing

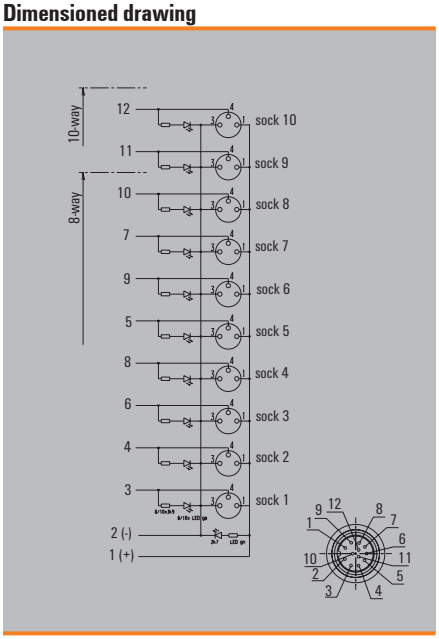

Line
PCB version

SAI-6-S M8 L SL

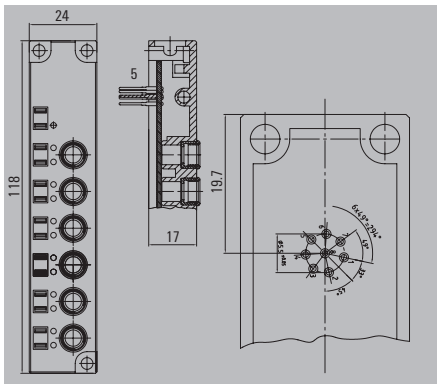

Ordering data

3-pole	
	6 channel
Note	

SAI-6-S M8 L SL — 3-pole

Type	QTY	Order No.
SAI-6-S 3P M8 L SL	1	1057720000

Other versions on request

Technical data

Operating voltage	10...30 V
Current of continuous busbars	1 A
max. current-carrying capacity per slot	2 A
Total current	6 A
Pollution severity	3
Protection degree	IP 68
Ambient temperature range	-25...+80 °C
Housing main material	Pocan
Contact carrier material	PBT (UL 94 V0)
Base material of contacts	CuZn, pre-nickeled, gold-plated
screw socket	CuZn, nickel-plated
Housing colour	grey, RAL 7032
Flammability class UL 94	V-0
Clamping range of hood-version	
Suitable for dragline cable (fixed cable connection)	Yes

Dimensioned drawing

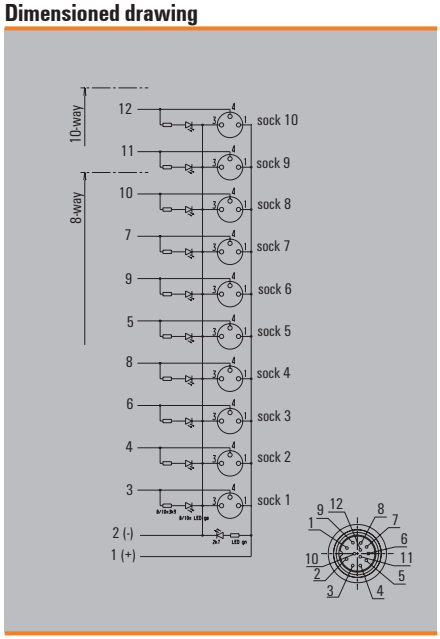

M8 distributors

Line / Fixed cable version

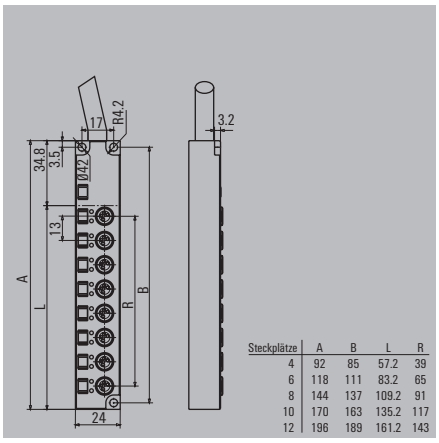

Steckplätze	A	B	L	R
4	92	85	57.2	39
6	118	111	83.2	65
8	144	137	109.2	91
10	170	163	135.2	117
12	196	189	161.2	143

Ordering data

Cable length 5 m (with fixed cable version)	SAI-4/6/8/10/12-L 3-pole Type	QTY	Order No.	SAI-4/6/8/10/12-L 4-pole Type	QTY	Order No.
4 channel	SAI-4-F 3P M8 L 5M	1	1828720000	SAI-4-F 4P M8 L 5M	1	1849680000
6 channel	SAI-6-F 3P M8 L 5M	1	1828700000	SAI-6-F 4P M8 L 5M	1	1849700000
8 channel	SAI-8-F 3P M8 L 5M	1	1828680000	SAI-8-F 4P M8 L 5M	1	1828620000
10 channel	SAI-10-F 3P M8 L 5M	1	1828660000			
12 channel	SAI-12-F 3P M8 L 5M	1	1828640000			
Cable length 10 m (with fixed cable version)						
4 channel	SAI-4-F 3P M8 L 10M	1	1828710000	SAI-4-F 4P M8 L 10M	1	1849690000
6 channel	SAI-6-F 3P M8 L 10M	1	1828690000	SAI-6-F 4P M8 L 10M	1	1849670000
8 channel	SAI-8-F 3P M8 L 10M	1	1828670000	SAI-8-F 4P M8 L 10M	1	1828610000
10 channel	SAI-10-F 3P M8 L 10M	1	1828650000			
12 channel	SAI-12-F 3P M8 L 10M	1	1828630000			
Note						

Technical data

Operating voltage	10...30 V
Current of continuous busbars	1 A
max. current-carrying capacity per slot	2 A
Total current	6 A
Pollution severity	3
Protection degree	IP 68
Ambient temperature range	-25...+80 °C
Housing main material	Pocan
Contact carrier material	PBT (UL 94 V0)
Base material of contacts	CuZn, pre-nickeled, gold-plated
screw socket	CuZn, nickel-plated
Housing colour	grey, RAL 7032
Flammability class UL 94	V-0
Clamping range of hood-version	
Suitable for dragline cable (fixed cable connection)	Yes

Wiring diagram

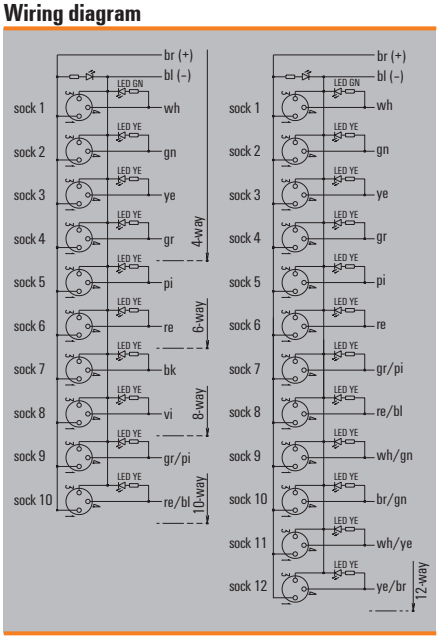

Wiring diagram

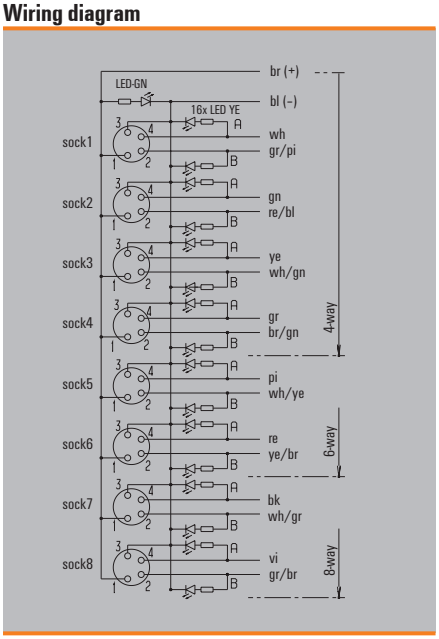

Overview

M5-Line with M12 outlet

Fixed cable version

M5-Line with M16 outlet

The Weidmüller SAI-M5 distributors are currently the smallest SAI distributors in the world

Whether it is mobile phones or computers, as functionality increases, so the size of components decreases. Today, machine designers face the same problem. Space is at a premium, even in large machines, particularly where the sensor components are located. In the past the M8 distributor solved these problems. However, these units are now considered to be too large. The first move was to make the sensors smaller. Then it was the turn of the cables and distributors.

These extremely small units are surprisingly easy to handle. M5 plug in connectors have three or four poles and are thus equivalent to M8 plug-in connectors.

However, unlike the M8 plug in connectors, the different M5 pole numbers are compatible with each other. The advantage is obvious: 4 pole units which are required, for example, for antivalent sensors can now be plugged into one and the same distributor with standard NOC applications. In the M8 system special adapters are required. In addition to size, the module weight is also critical in some applications.
For example, the speed of a handling machine is influenced by the weight of the moving parts. The M5 system offers outstanding benefits with its unrivalled small size and light weight.

There is no version for custom bus cable assembly for this SAI distributor, which is delivered with a plug in connection and a fixed cable connection. A compact 12 pole M12 plug in connector has been developed as a plug in connection specifically for this distributor.

This ratio of surface area to number of connections is reminiscent of the computer industry. The M16 bus connections can be integrated in the module as an option, so that the SAI M5 can be used as a combined SAI system. A Y-configuration is possible in conjunction with the M16 splitter.

The fixed cable version is particularly suitable for standard applications where the distributor is permanently installed and the electrical installation does not have to be disconnected after installation.

MM5 distributors

Quality comes in little packages...

This is the motto applied by Weidmüller when developing its M5 plug in connectors. The outstanding feature of these connectors is their tiny size. Attention has also been given to stability and good conductivity.

For a comparison of sizes, take a look at the photos on the left.

These products are ideal for handling machines where light weight and small size are vital.

Comparing the sizes

M12 **M8** **M5**

M12 **M8** **M5**

Marking

Each channel is marked with the channel number. Each initiator LED can be exactly allocated with the letters A and B. In addition, the distributor and every channel can be marked.

Line

SAI-4/8-F

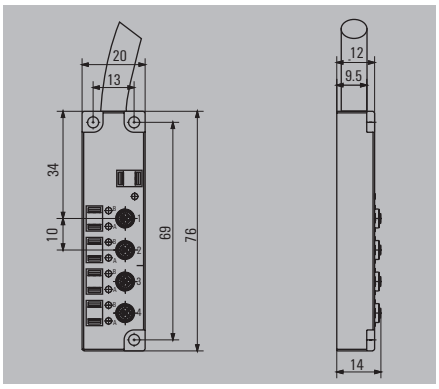

SAI-4/8-S

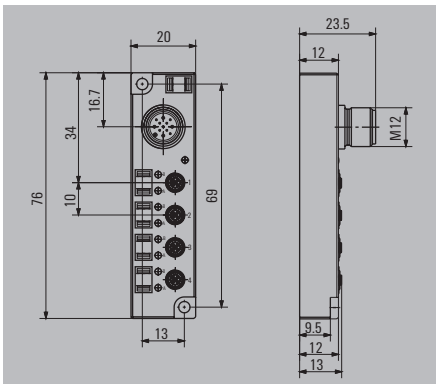

Ordering data

SAI-4/8-F		M5
Type	**QTY**	**Order No.**
3-pole		
Cable length 5 m (with fixed cable version) 4 channel		
8 channel		
Cable length 10 m (with fixed cable version) 4 channel		
8 channel		
4-pole		
Cable length 5 m (with fixed cable version) 4 channel		
8 channel		
Cable length 10 m (with fixed cable version) 4 channel		
8 channel		
SAI-4-F 3P M5 L5M	1	1851740000
SAI-8-F 3P M5 L5M	1	1851760000
SAI-4-F 3P M5 L10M	1	1845820000
SAI-8-F 3P M5 L10M	1	1845830000
SAI-4-F 4P M5 L5M	1	1851770000
SAI-8-F 4P M5 L5M	1	1851750000
SAI-4-F 4P M5 L10M	1	1845800000
SAI-8-F 4P M5 L10M	1	1845810000
Note		
Other versions on request		

		M5
Type	**QTY**	**Order No.**
SAI-8-S 3P M5	1	1845850000
SAI-4-S 4P M5	1	1845840000
Other versions on request		

Technical data

Operating voltage	10...30 V
Current of continuous busbars	1 A
max. current-carrying capacity per slot	3 A
Total current	3 A
Pollution severity	3
Protection degree	IP 67
Ambient temperature range	-25...+80 °C
Housing main material	PA 6 GF
Contact carrier material	Nickel-plated CuZn
Base material of contacts	Au (Gold)
screw socket	CuZn, nickel-plated
Housing colour	grey, RAL 7032
Flammability class UL 94	V-0
Clamping range of hood-version	
Suitable for dragline cable (fixed cable connection)	Yes

Dimensioned drawing

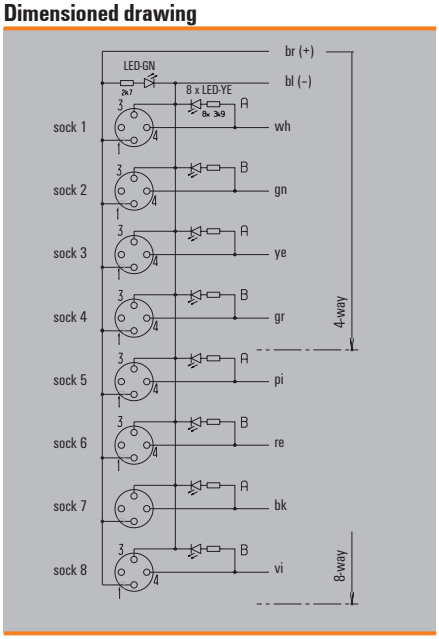

Dimensioned drawing

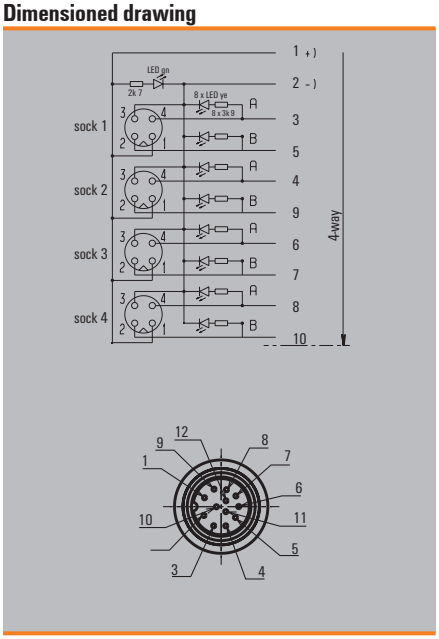

Line

SAI-4/8-S16

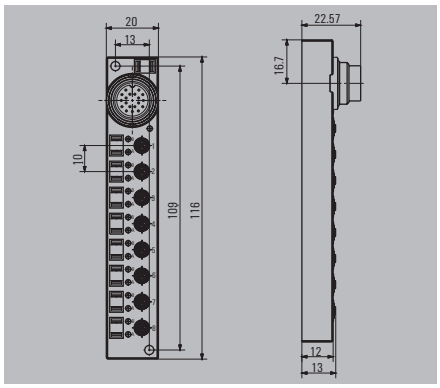

Ordering data

SAI-4/8-S16		M5
Type	**QTY**	**Order No.**
3-pole		
4 channel		
8 channel		
SAI-4-S16 3P M5	1	**1845890000**
SAI-8-S16 3P M5	1	**1845880000**
4-pole		
4 channel		
8 channel		
SAI-4-S16 4P M5	1	**1845870000**
SAI-8-S16/19P 4P M5	1	**1845860000**
Note		
1845870000,1845880000 and 1845890000 with M16 / 12-pole 1845860000 with M16 / 19-pole		

Technical data

Operating voltage	10...30 V
Current of continuous busbars	1 A
max. current-carrying capacity per slot	3 A
Total current	3 A
Pollution severity	3
Protection degree	IP 67
Ambient temperature range	-25...+80 °C
Housing main material	PA 6 GF
Contact carrier material	Nickel-plated CuZn
Base material of contacts	Au (Gold)
screw socket	CuZn, nickel-plated
Housing colour	grey, RAL 7032
Flammability class UL 94	V-0
Clamping range of hood-version	
Suitable for dragline cable (fixed cable connection)	

Dimensioned drawing

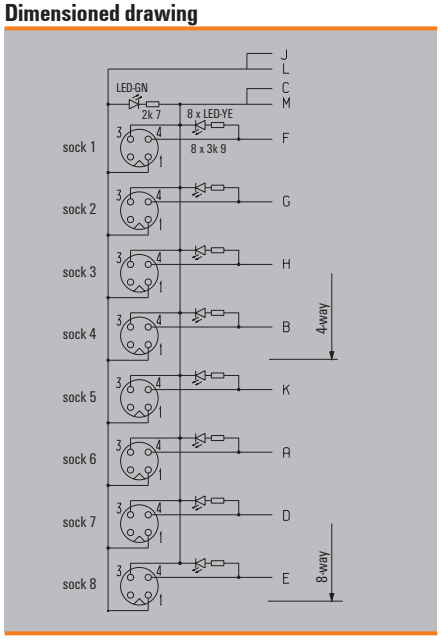

SAI Ex i distributor for Ex i zone 1

Hooded version with 4 plug-in slots

Hooded version with 8 plug-in slots

SAI distributor for Ex i zone 1

Available for the first time: passive SAI distributors with M12 connection technology in IP 68 ingress protection classification for Ex i hazardous area applications.

The SAI Ex i distributor is certified for zone 1 of potentially explosive areas, even for G and D zones.

SAI Ex i distributors are available with four or eight connections for simple connection of NAMUR sensors. This makes distribution boxes with certification a thing of the past. These modules are suitable for process engineering, but also for “standard” machine applications. The versions are available with or without yellow LEDs.

The distributors are provided with a removable connection hood. This detail also helps to reduce costs because only the defective bus cable needs to be replaced and not the entire distributor.

Hood version

Zone 1

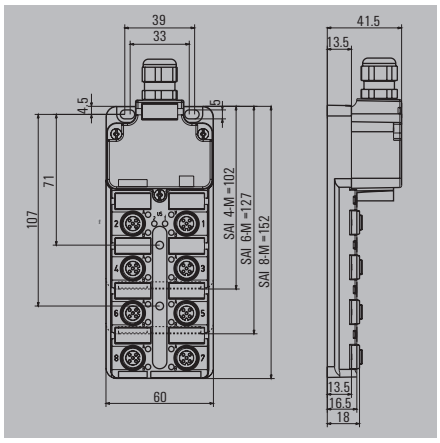

Ordering data

Complete modules		SAI-4/8-M Ex i		4-pole	SAI-4/8-M Ex ia		5-pole
		Type	QTY	Order No.	Type	QTY	Order No.
	4 channel	SAI-4-M 4P Exi Z1 IL	1	1868360000	SAI-4-M 5P M12 Ex ia	1	1896050000
	6 channel				SAI-6-M 5P M12 Ex ia	1	1896070000
	8 channel	SAI-8-M 4P Exi Z1 IL	1	1868370000	SAI-8-M 5P M12 Ex ia	1	1896090000
Without initiator LED	4 channel	SAI-4-M 4P Exi Z1 OL	1	1868350000			
Without initiator LED	8 channel	SAI-8-M 4P Exi Z1 OL	1	1894380000			
Note							

Technical data

Operating voltage	10...30 V
Current of continuous busbars	100 mA
max. current-carrying capacity per slot	100 mA
Total current	2.3 A
Pollution severity	3
Protection degree	IP 68
Ambient temperature range	-20...+40 °C
Housing main material	Pocan
Contact carrier material	PBT (UL 94 V0)
Base material of contacts	CuZn, pre-nickeled, gold-plated
screw socket	CuZn, nickel-plated
Housing colour	grey, RAL 7032
Flammability class UL 94	V-0
Clamping range of hood-version	0.1...1.5 mm²
Suitable for dragline cable (fixed cable connection)	

Wiring diagram

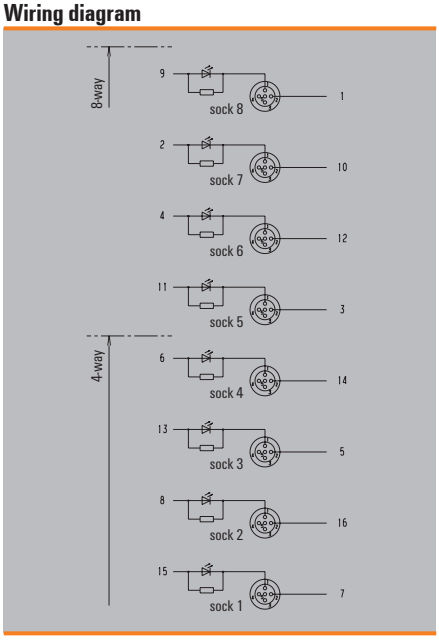

Wiring diagram

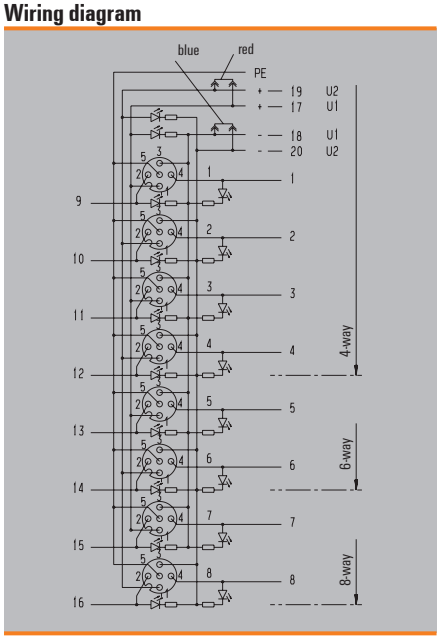

M23 Connectors and cables

M23 Connectors and cables	Product Description: SAI M23 Connectors	J.2
	Contact assignment	J.7
	Technical data	J.8
	Overview	J.10
	M23 connector for signal transmission	J.12
	M23 connector for power transmission	J.26
	Moulded M23 cables	J.30
	SAI distributor M12 with M23	J.31
	SAI distributor M8 with M23	J.33
	Installation instructions – Signal connectors	J.34
	Installation instructions – Power connectors	J.39
	M23 connector	J.43

SAI M23

A comprehensive product line of connectors, distributors and cables

M23 connectors are mainly used for connecting electrical drives and servo-motors into industrial automation applications.
The M23 connectors are very easy to handle and operate. In addition to the injection-moulded variants and the SAI distributors with M23 connectors, Weidmüller is now offering customisable versions and built in plugs.

The M23 built in connector

The M23 built in connector provides a custom fit solution for building directly into the device.

M23 connectors for crimping

M23 connectors are easy to handle and operate. This is supported by the type of crimping that is used.

Robust metal housing

The M23 connectors feature an extra robust design.

Solutions for power and signals

The extensive product line includes the key housing shapes, such as angled connectors, coupling connectors and device connectors.

M23 connector for signal transmission
Housings

M23 connector for signal transmission
Built in connector

M23 connector for power transmission
Housings

M23 connector for power transmission
Built-in connector

Moulded M23 cables

SAI distributors

Product Description: SAI M23 Connectors

Technology and requirements

The M23 connectors are mainly used for integrating electrical drives and servo motors into industrial automation facilities. The M23 designation is based on the thread diameter of the connector, as shown in Figures 1 and 2. With their wide variety of inserts and housings, these connectors are equally suited for applications involving signal or power transmission. Applications set in harsh industrial environments place strict requirements on the connector. Much is demanded of the housing, the inner insert and the connector contact. Thermal loads, physical loads, and loads from the transmitted electrical power are commonplace. M23 connectors are capable of carrying a load of up to 250/630 V at 9/30 A.

The connectors must be resistant to the penetration of all particles and substances. They must also comply with the required class of IP protection. The material used for manufacture must be resistant to acid and alkaline solutions that may be used during cleaning or production processes. Also it must not be possible for residues to accumulate in the plug which could later contaminate the production flow. It must not be possible for the plug components to loosen due to vibration. In addition, the cable and connector must have EMC shielding for some applications. This keeps external interference from influencing the signals and it also prevents the transmitted signals in the cable from interfering with other cables or components. The standards and directives (such as the German or European standards) that are followed are basically only recommendations concerning the composition of the connector. A so-called “cold standard” exists for the M23 connectors.

Variants and designs

The variants can be generally classified according to their outer design, into either customisable types, or plastic moulded connectors with pre-connected cables. Both variants are available in male or female versions, and in straight or angled design. Different designs and inserts can be combined to fit the particular application so that an almost limitless variety of combinations is possible. The connector inserts are available in a variety of different pole counts and as either male or female versions. The pole counts also vary in that some contacts in the mating profile may have a larger cross-section than the others. Other types include the device connector variants which are used for contacting and connecting housings. These also come in a variety of designs. The metal alloy in use may differ depending on the particular type of application. For example, stainless steel is used for those variants that will be used in the food processing industry. Each connector is optionally available with EMC protection and a plastic surface.

Customisable connectors

Customisable connectors are almost all manufactured from metal alloys. Variants with plastic housings or fitting nuts are rare and used mostly for customer-specific solutions. Customiseable connectors are made up of a housing, a plastic contact carrier, and the contacts themselves. The various housing types can be equipped with the corresponding contact carriers. The carriers differ in their number of poles and the arrangement of the poles. Different types of contacts may also be used within the contact carriers. The shape of the contacts is either male or female. There are also difference in the width, material, and connection system (such as soldered, crimped or screwed).

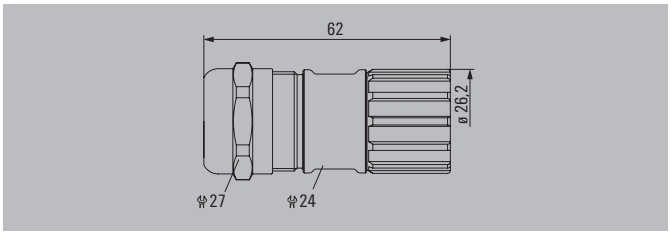

Figure 1: M23 cable connector

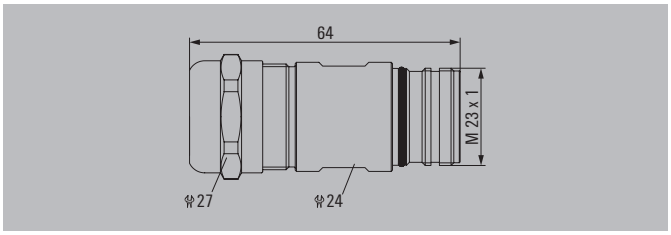

Figure 2: M23 coupling connector

This modular construction allows for a wide variety of combinations to fit any application type. Figure 3 shows the design and assembly of an M23 signal connector. Since the connector is usually put together in the field, the key requirement is that the connector is easy and reliable for the electrician to handle on-site. A good example of convenient handling is the integrated EMC shielding. An improved shield connection results because the shielding can be connected in less steps and with fewer tools. The complete assembly process must be clear and concise, and should only take a few steps.

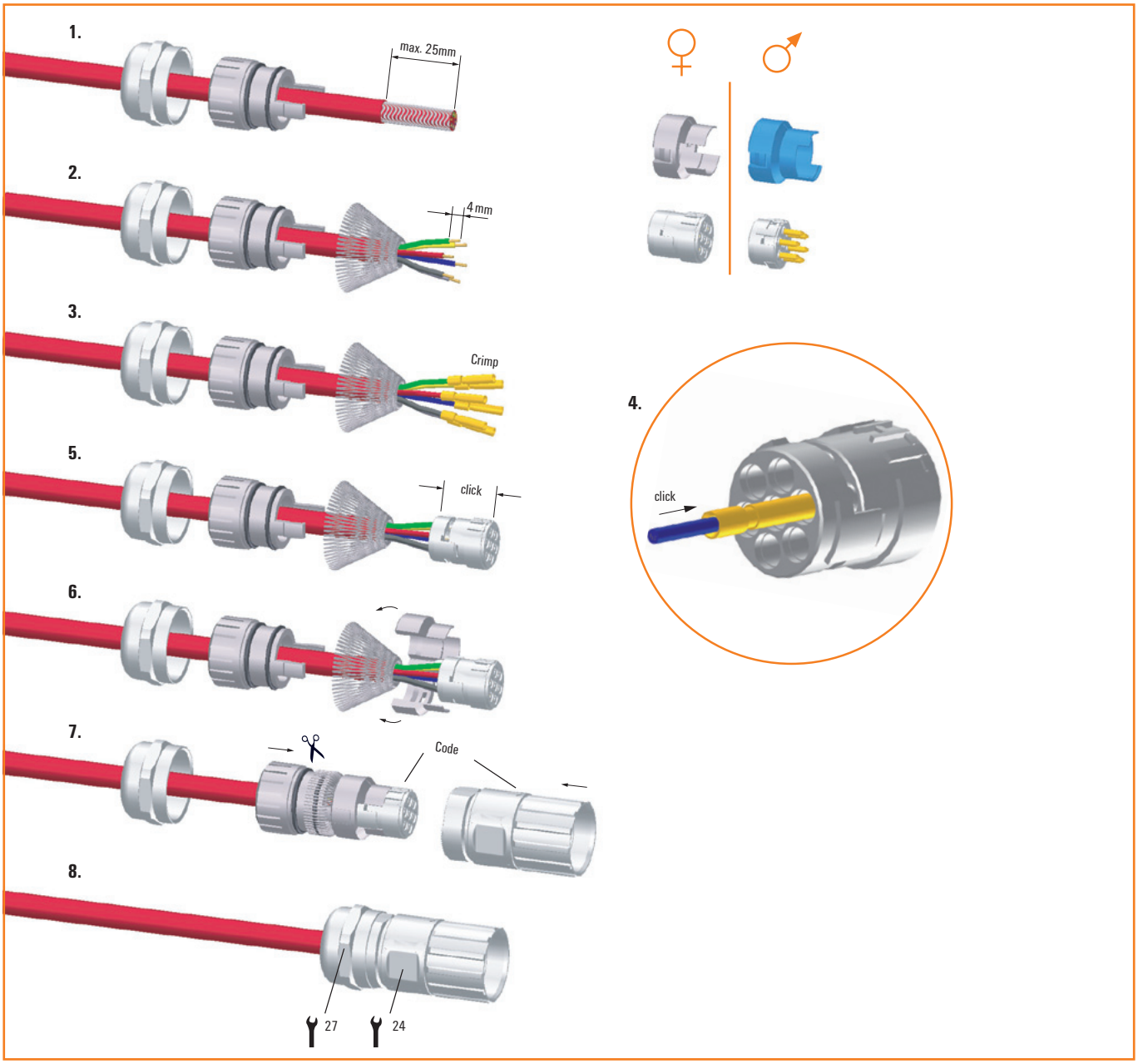

Figure 3: Design and assembly of an M23 connector

Plastic injection moulded connector with connected cable

Plastic injection moulded cables are cables that have already been fitted with connectors. First the cables are connected with the contacts and then these are mounted into the contact carrier. Next, plastic injection moulding is used to cover the cable and contact carrier with a plastic moulding. This ensures a highly stable and well sealed connector housing. The connector must be destroyed for it to be disconnected from its cable. The connector's outer form and material is put together by a plastic processing tool.
The advantage of a moulded cable is that the connection between the cable and the connector has already been tested at the production factory. The electrician need only adjust the length. Depending on the application, he may choose to use another connector on the open end or connect the individual cable wires directly (for example, to a terminal block). The advantages of this variant type includes the inexpensive assembly of large batches, the high degree of automation and minimal amount of material used. High reliability and an excellent seal are two additional advantages.

Plastic injection-moulded M23 connector

Connector usage and application

M23 connectors are mainly used for integrating within machine and facility construction applications. These applications require connections with a long life span and high reliability. The failure of a single connector could lead to the failure of the entire production line. It's important to avoid facility outages caused by a connector malfunction, so the machine and facility construction industry relies on connectors with the advantages listed above. Both signals and power must be transferred in such applications. The connector and the cable must be able to withstand harsh industrial conditions. Cables may be under stress from constant motion, in particular for applications involving robotics or dragline chains. Special cables with a specific maximum bending radius are used for such applications (for example, the bending radius may be 10d, i.e., ten times the cable diameter). When constructing a facility, a variety of connection scenarios are possible based on the particular conditions or adaptations of existing facilities. The length or configuration of the cable must be adapted to fit these conditions. If space is constricted, for instance, it may be necessary to replace a straight connector with an angled one.
Cables can be equipped with both a moulded (extruded) connector and a customisable connector. This ensures proper functionality while providing the flexibility to adapt to changing conditions on location. Safe connections can thus be established with any possible connector combination or at any protective class required. This gives the facility planner the safety he needs. And the electrician on-site can set up the facility properly because he has sufficient flexibility to adapt to uncertain conditions. For sensor systems, connectors with high pole counts are often used on SAI distributors. Individual sensors are connected to the distributors where the signals are then centralised. They are then transferred to the controller using a cable with an M23 connector. The most common use for transmitting power involves the connection of servo-motors in machines. M23 connectors are used for this purpose because of their sturdy and compact design and their high power-carrying capacities. Because of the size of the M23 connector, it can also be used in a hybrid version for transmitting both signals and power. The signal-carrying contacts are then shielded within the connector to ensure that the transmitted voltages do not interfere with the signals.

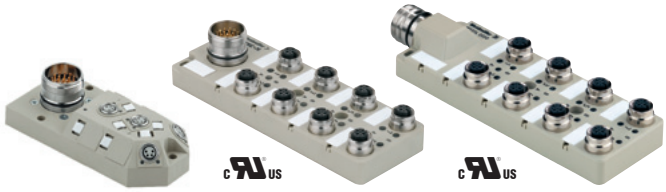

SAI distributor with M23 connector

Contact assignment SAI M23

M23 12- and 19-pole, for SAI distributors and cables

12-pole

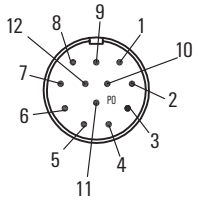

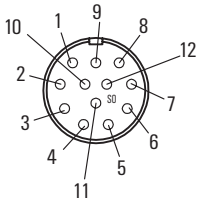

Pole	Colour code	Plug-in station	Contact M12
1	white	1	4
2	green	2	4
3	yellow	3	4
4	grey	4	4
5	pink	5	4
6	red	6	4
7	black	7	4
8	violet	8	4
9	blue (–)	1–8	3
10	blue (–)	1–8	3
11	brown (+)	1–8	1
12	green-yellow (PE)	1–8	5

19-pole

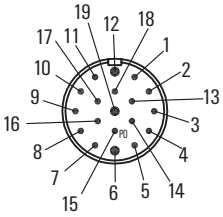

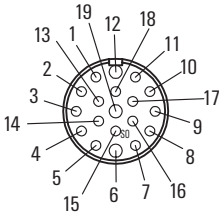

Pole	Colour code	Plug-in station	Contact M12
1	violet	8	4
2	red	6	4
3	grey	4	4
4	red/blue	2	2
5	green	2	4
7	grey/pink	1	2
8	white/green	3	2
9	white/yellow	5	2
10	white/grey	7	2
11	black	7	4
13	yellow/brown	6	2
14	brown/green	4	2
15	white	1	4
16	yellow	3	4
17	pink	5	4
18	grey/brown	8	2
6	blue (–)	1–8	3
12	green-yellow (PE)	1–8	5
19	brown (+)	1–8	1

Description code

Housing	
G	Inner thread
K	Outer thread
W	angled
S	Signal connectors
L	Power connectors
7/12	Cable passage
Inserts	
BE	Female insert
SE	Male insert
4/4	Number of contacts, here for 4 sensor and 4 power contacts
Contacts	
KBC	Female contact
Wire cross-section	
0.08/0.56	0.08 mm^2 – 0.56 mm^2
0.25/1.0	0.25 mm^2 – 1.0 mm^2
0.75/2.5	0.75 mm^2 – 2.5 mm^2
Moulded M23 cables	
SAIS	Cable with male plug
SAIB	Cable with female plug
12p	12-pole
19p	19-pole
AN	angled
ST	straight
...M	Length in metres

Contact partitioning

Signal connectors Type	1 mm contact	1.5 mm contact	2 mm contact
6-pole			6
7-pole			7
9-pole	8		1
12-pole	12		
16-pole	16		
17-pole	17		
19-pole	16	3	
Power connectors **Type**	**1 mm contact**	**1.5 mm contact**	**2 mm contact**
6-pole			6
4+4-pole	4		4

Contacts for signal plugs cannot be used in inserts for power plugs and vice versa.

J

Signal connectors

Technical data

Mechanical data		
Housing		Copper-Zinc alloy Die Casting
Housing surface		Nickel plated brass other surface upon request
Inserts (for contacts)		Thermoplastic Polyamid PA 6 (Nylon 6/6), PBT / Fire protection class V-0
Contacts		Copper-Zinc alloy
Contact surface at point of contact		Nickel and gold plated (0.25 µm Au)
Minimum mating cycles		> 1000
Seals / O-Rings		Buna-N standard optional Viton® (Viton is a registered trademark of DuPont)
Temperature range		-40 °C – 125 °C
Type of contacts		Crimp, solder, dip-solder (PCB)
Protection, Imperviousness		IP 67 / IP 69 K per EN 60 529 (connected)
Cable diameter range		3 – 17 mm

Electrical Data										
Number of positions		6	7	9		12	16	17	19	
Number of contacts		6	7	8	1	12	16	17	16	3
Contact-Ø	mm	2	2	1	2	1	1	1	1	1.5
Nominal current	A	20	20	8	20	8	8	8	8	10
Nominal voltage at pollution degree 2	V~	630	630	500		500	400	400	320	
Nominal voltage at pollution degree 3	V~	300	300	200		200	160	160	100	
Test voltage	V~	2500	2500	2500		2500	1500	1500	1500	
Insulation resistance	MΩ	$> 10^{10}$	$> 10^{10}$	$> 10^{10}$		$> 10^{10}$	$> 10^{6}$	$> 10^{6}$	$> 10^{6}$	
Max. contact resistance	mΩ	3	3	3		3	3	3	3	

Derating curve

Straight Connectors male + female M 23, 12-pole, wires 12 x AWG17

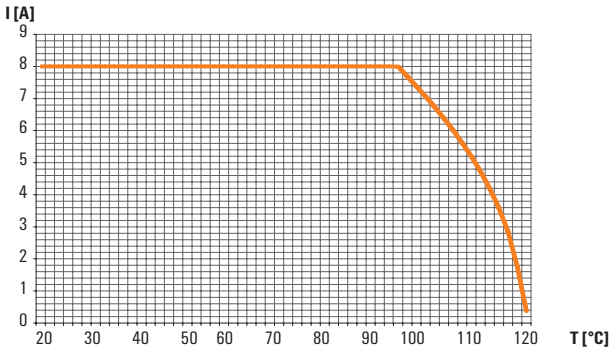

Power connectors

Technical data

Mechanical data				
Housing		Copper-Zinc alloy Die Casting		
Housing surface		Nickel plated brass other surface upon request		
Inserts (for contacts)		Thermoplastic Polyamid PA 6 (Nylon 6/6), PBT / Fire protection class V-0		
Contacts		Copper-Zinc alloy		
Contact surface at point of contact		Nickel and gold plated (0.25 µm Au)		
Minimum mating cycles		> 1000		
Seals / O-Rings		Buna-N standard optional Viton® (Viton is a registered trademark of DuPont)		
Temperature range		-40 °C – 125 °C		
Type of contacts		Crimp		
Protection, Imperviousness		IP 67 / IP 69 K per EN 60 529 (connected)		
Cable diameter range		7 – 17 mm		
Electrical Data				
Number of positions		5 + PE	4/4	
Number of contacts		6	4	4
Contact-Ø	mm	2	1	2
Nominal current	A	28	8	28
Nominal voltage at pollution degree 2	V~	800	300	800
Nominal voltage at pollution degree 3	V~	600	300	600
Test voltage	V~	4000	2500	4000
Insulation resistance	MΩ	> 10^{13}	> 10^{13}	
Max. contact resistance	mΩ	3	3	

Derating curve

Straight connectors male + female M 23, 5 + PE, wires 5 x AWG12

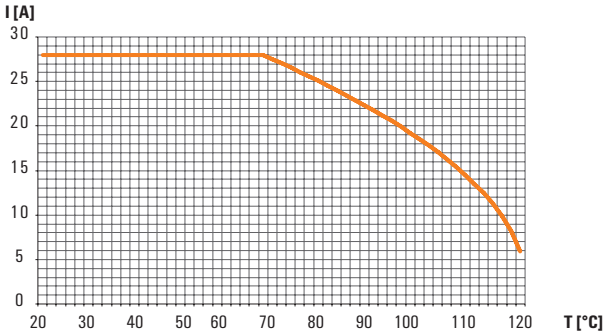

M23 connector for signal transmission

All customisable connectors can also be assembled together with shielded cables.

Housing	Contact inserts*	Contacts
Cable connector	6-pole	Crimp pin 1 mm rotated 0.08 – 0.56 mm²
Coupling connector	7-pole	Crimp pin 1 mm rotated 0.14 – 1.00 mm²
Angled connector	9-pole	Crimp pin 1 mm rotated 1.00 – 1.50 mm²
Angled connector (coupling)	12-pole	Crimp socket 1 mm rotated 0.08 – 0.56 mm²
Device connector (front panel)	16-pole	Crimp socket 1 mm rotated 0.14 – 1.00 mm²
Device connector with knurled nut	17-pole	Crimp socket 1 mm rotated 1.00 – 1.50 mm²
Device connector (single-hole mount)	19-pole	Crimp pin 2 mm rotated 0.14 – 0.56 mm²
Device connector (angled)		Crimp socket 2 mm rotated 0.56 – 1.00 mm²
Device connector (back panel)		Crimp pin 2 mm rotated 0.75 – 2.50 mm²
		Crimp socket 2 mm rotated 0.75 – 2.50 mm²

* Solder and crimp inserts

M23 connector for power transmission

Housing	Contact inserts*	Contacts
Cable connector	6 x Male 2 mm	Crimp pin 1 mm turned 0.25 – 1.00 mm²
Coupling connector	6 x Socket 2 mm	Crimp socket 1 mm turned 0.25 – 1.00 mm²
Angled connector	4 x Male 1 mm 4 x Male 2 mm	Crimp pin 2 mm turned 0.75 – 2.50 mm²
Angled connector (coupling)	4 x Socket 1 mm 4 x Socket 2 mm	Crimp pin 2 mm turned 2.50 – 4.00 mm²
Device connector (front panel)		Crimp socket 2 mm turned 0.75 – 2.50 mm²
Device connector with knurled nut		Crimp socket 2 mm turned 2.50 – 4.00 mm²
Device connector (back panel)		
Device connector (back panel)		
Device connector (angled)		

* Crimp inserts

Moulded M23 cables

Housing
Cable connector
Coupling connector
Angled connector
Angled connector (coupling)

Housing

For cables with outer diameter of: 7–12 mm

Cable connector

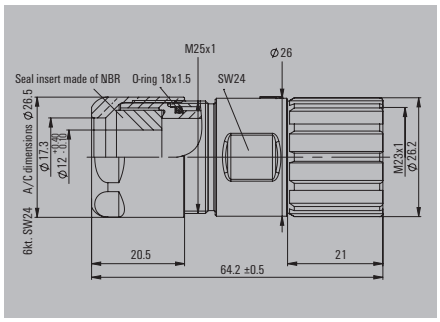

Ordering data

Type	Qty.	Order No.
SAI-M23-GS-7/12	1	1995840000
SAI-M23-GS-11/17	1	1299390000

Coupling connector

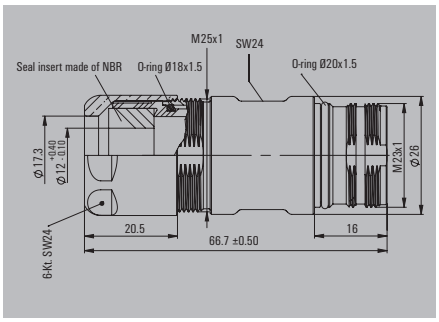

Ordering data

Type	Qty.	Order No.
SAI-M23-KS-7/12	1	1169900000

J

Angled connector

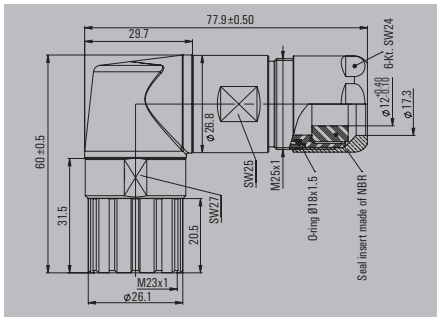

Ordering data

Type	Qty.	Order No.
SAIL-M23-GS-S-7/12	1	1169920000

Angled connector (coupling)

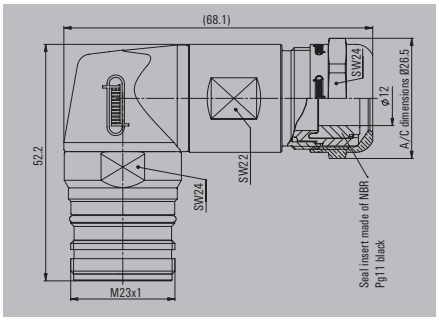

Ordering data

Type	Qty.	Order No.
SAIL-M23-KSW-7/12	1	1169930000

Built-in connector

With 3.2-mm mounting holes

Device connector (front panel)

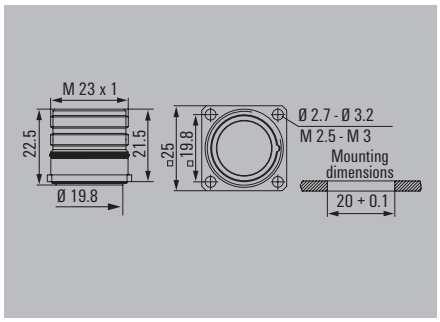

Ordering data

Type	Qty.	Order No.
SAIE-M23-S-VW	1	1169940000

Device connector with knurled nut

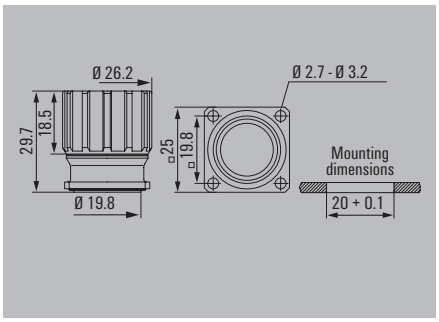

Ordering data

Type	Qty.	Order No.
SAIE-M23-S-RM	1	1169950000

Device connector (single-hole mount)

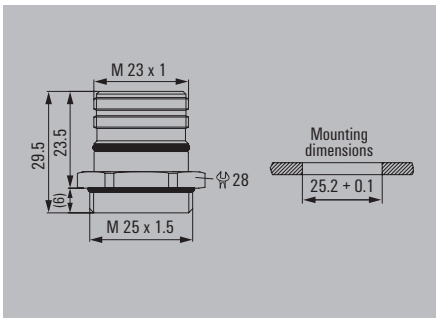

Ordering data

Type	Qty.	Order No.
SAIE-M23-S-EM	1	1169970000

Device connector (angled)

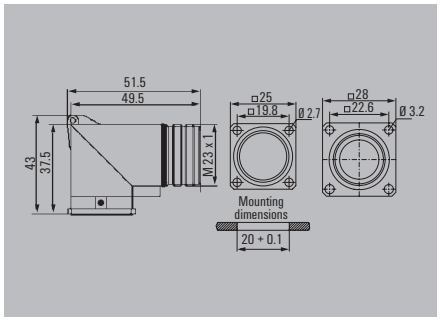

Ordering data

Type	Qty.	Order No.
SAIE-M23-S-W	1	1169980000

Device connector (back panel)

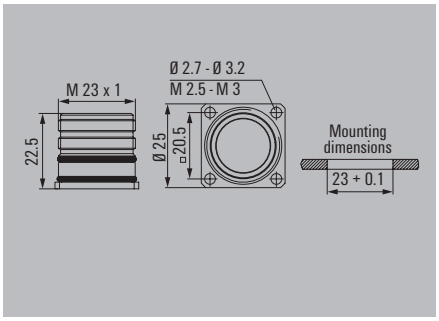

Ordering data

Type	Qty.	Order No.
SAIE-M23-S-HW	1	1169990000

Inserts

6-pole

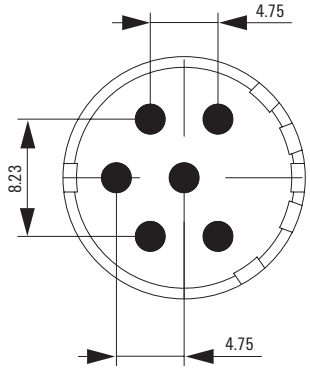

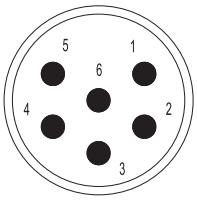

Male insert on plug side

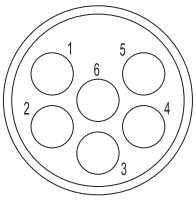

Female insert on plug side

Ordering data

	Type	Qty.	Order No.
Insert 6-pole male	SAI-M23-SE-6	1	1170000000
Insert 6-pole socket	SAI-M23-BE-6	1	1170020000

9-pole

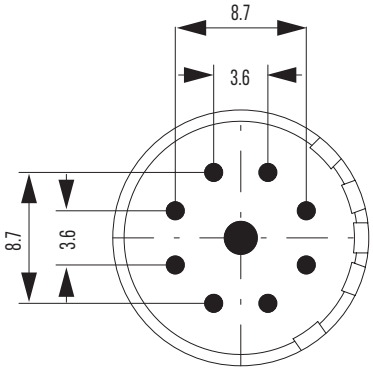

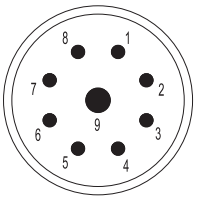

Male insert on plug side

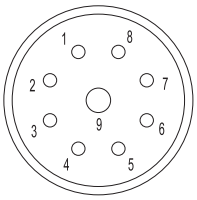

Female insert on plug side

Ordering data

	Type	Qty.	Order No.
Insert 9-pole male	SAI-M23-SE-9	1	1170050000
Insert 9-pole socket	SAI-M23-BE-9	1	1170060000

7-pole

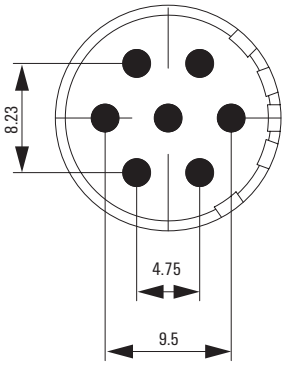

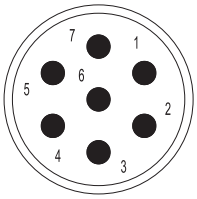

Male insert on plug side

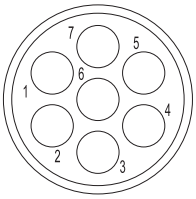

Female insert on plug side

Ordering data

	Type	Qty.	Order No.
Insert 7-pole male	SAI-M23-SE-7	1	1170030000
Insert 7-pole socket	SAI-M23-BE-7	1	1170040000

12-pole

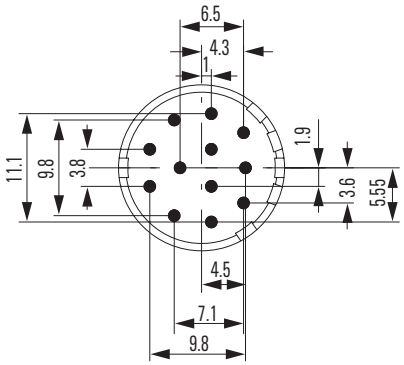

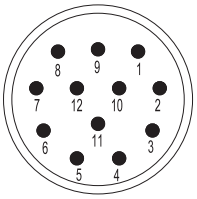

Male insert on plug side

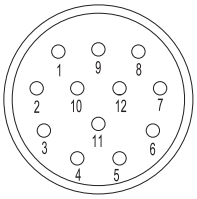

Female insert on plug side

Ordering data

	Type	Qty.	Order No.
Insert 12-pole male	SAI-M23-SE-12	1	1170070000
Insert 12-pole socket	SAI-M23-BE-12	1	1995850000
Reverse flow socket	SAI-M23-BE-12-G	1	1296730000

16-pole

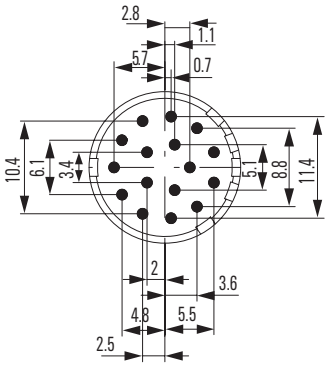

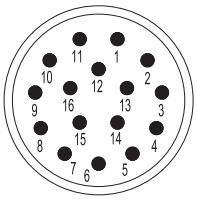

Male insert on plug side

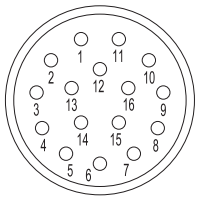

Female insert on plug side

Ordering data

	Type	Qty.	Order No.
Insert 16-pole male	SAI-M23-SE-16	1	1170080000
Insert 16-pole socket	SAI-M23-BE-16	1	1170090000

19-pole

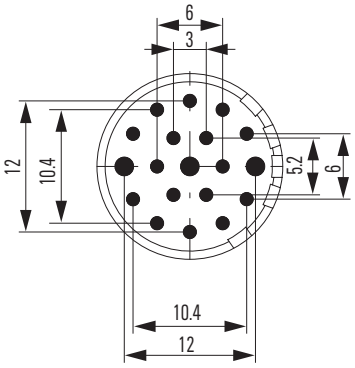

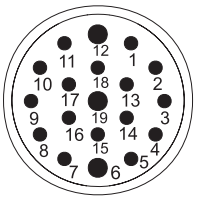

Male insert on plug side

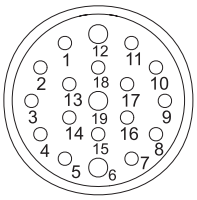

Female insert on plug side

Ordering data

	Type	Qty.	Order No.
Insert 19-pole male	SAI-M23-SE-19	1	1170120000
Insert 19-pole socket	SAI-M23-BE-19	1	1170130000

17-pole

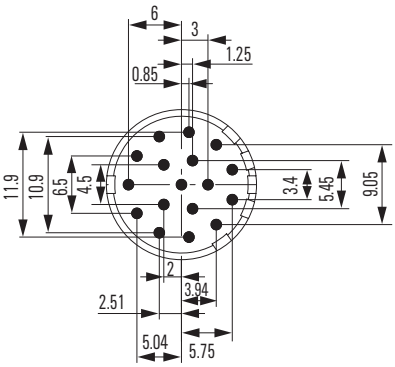

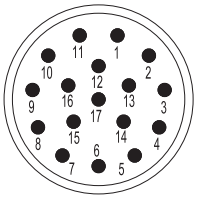

Male insert on plug side

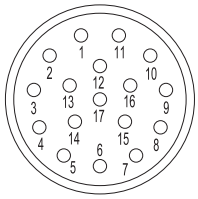

Female insert on plug side

Ordering data

	Type	Qty.	Order No.
Insert 17-pole male	SAI-M23-SE-17	1	1170100000
Insert 17-pole socket	SAI-M23-BE-17	1	1170110000

Contacts

Male, 1 mm

0.08-0.56

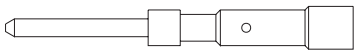

0.14-1.00

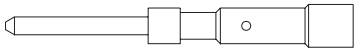

1.00-1.50

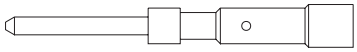

Ordering data

	Type	Qty.	Order No.
1.0 mm Male (0.08-0.56)	SAI-M23-KSC-0.08/0.56	50	1170140000
1.0 mm Male (0.14-1.00)	SAI-M23-KSC-0.14/1.00	50	1170150000
1.0 mm Male (1.00-1.50)	SAI-M23-KSC-1.00-1.5	50	1170170000

Female, 1 mm

0.08-0.56

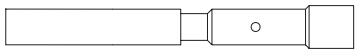

0.34-1.00

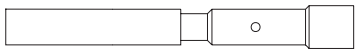

1.00-1.50

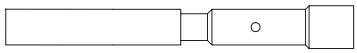

Ordering data

	Type	Qty.	Order No.
1.0 mm Socket (0.08-0.56)	SAI-M23-KBC-0.08/0.56	50	1995860000
1.0 mm Socket (0.34-1.00)	SAI-M23-KBC-0.34/1.00	50	1170180000
1.0 mm Male (1.00-1.50)	SAI-M23-KBC-1.00-1.5	50	1170210000

Male, 1.5 mm

0.14-1.00

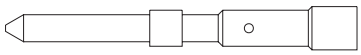

Ordering data

	Type	Qty.	Order No.
1.5 mm Male (0.14-1.00)	SAI-M23-KSC-1.5-0.14-1	50	1170220000

Female, 1.5 mm

0.14-0.56

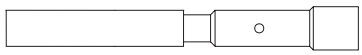

0.56-1.00

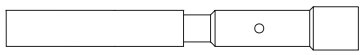

Ordering data

	Type	Qty.	Order No.
1.5 mm Socket (0.14-0.56)	SAI-M23-KBC-1.5-.14-.56	50	1170230000
1.5 mm Socket (0.56-1.00)	SAI-M23-KBC-1.5-.56-1.0	50	1170240000

Male, 2 mm

0.75-2.00

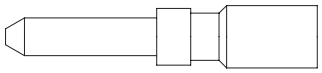

Ordering data

	Type	Qty.	Order No.
2.0 mm Male (0.75-2.00)	SAI-M23-KSC-2-0.75-2.50	50	**1170250000**

Female, 2 mm

0.75-2.00

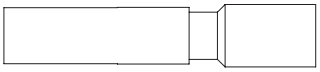

Ordering data

	Type	Qty.	Order No.
2.0 mm Socket (0.75-2.00)	SAI-M23-KBC-2-0.75-2.50	50	**1170260000**

Technical data

Number of positions		6	7	9		12	16	17	19	
Number of contacts		6	7	8	1	12	16	17	16	3
Contact-Ø	mm	2	2	1	2	1	1	1	1	1.5

Note: You can find tools in chapter K. All female connector contacts have SLS technology except for 1170230000 and 1170240000. Other information is available on page J. 44.

M23 inserts with solder contacts

The M23 solder versions are used for PCB mount soldering or to attach to wires.

SAI M23 solder inserts with PCB solder pin and solder cups fit the existing M23 housings. This product line is an extension of the existing M23 modular signal connectors. Please also see our M23 Product Information "SAI M23 Connectors".
PCB mount solder contacts are available in different lengths to properly fit with the various housing styles offered by Weidmüller.
All contacts are gold plated for improved connectivity and increased mating cycles.

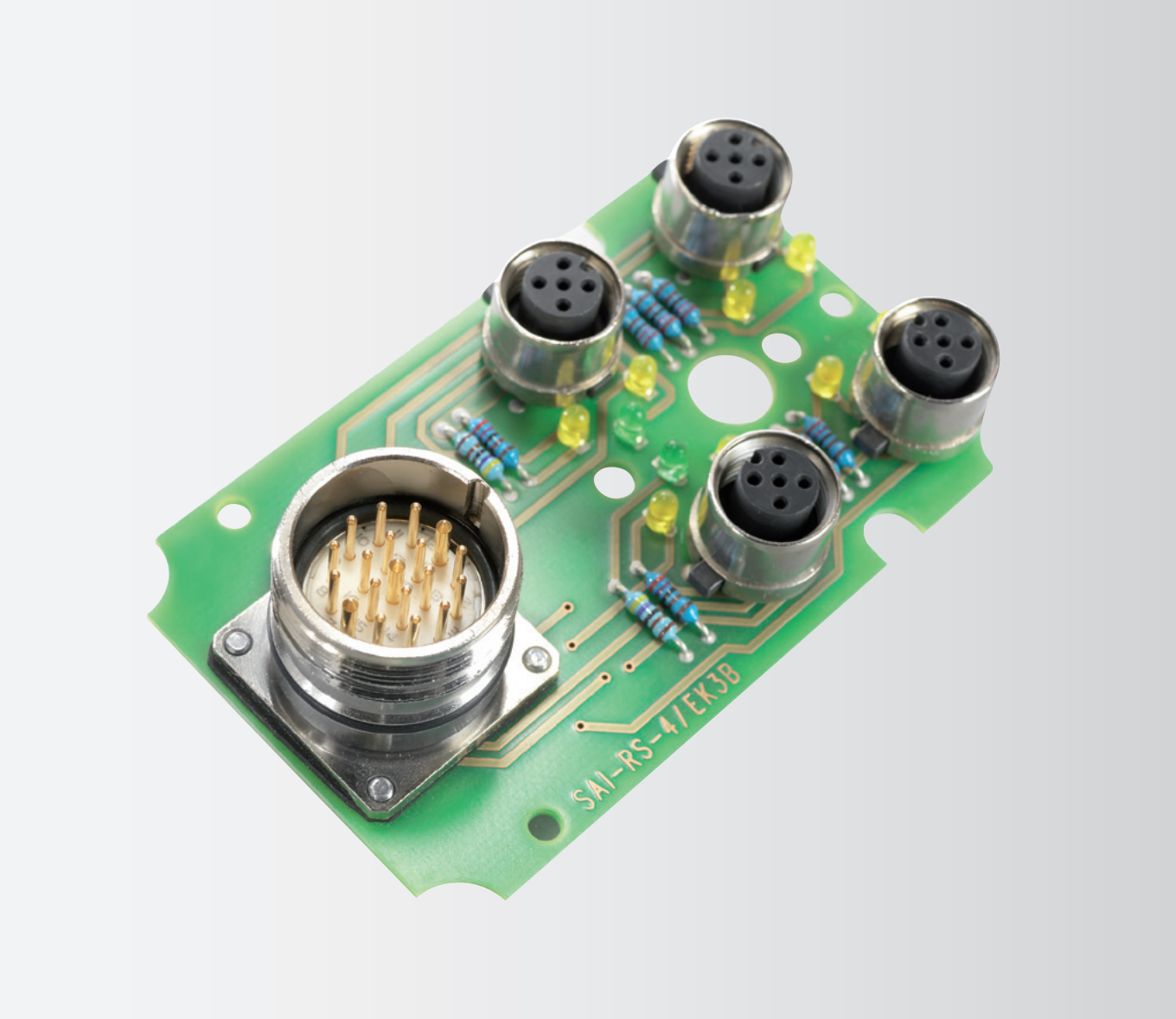

Inserts with solder contacts

6-pole

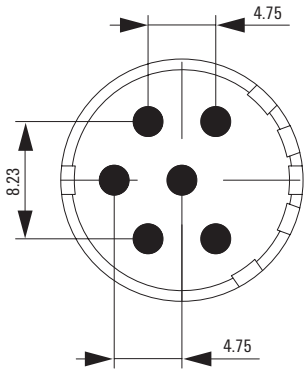

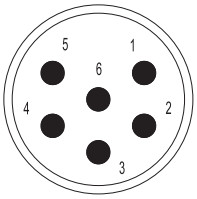

Male insert on plug side

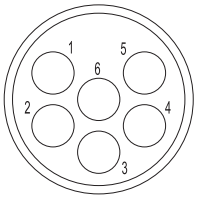

Female insert on plug side

Technical data

No. of poles	6
Contact number / diameter	6 x 2 mm

Ordering data

Pinout clockwise	Type	Qty.	Order No.
Solder pins, solder cup	SAI-M23-SE-6-F	1	1224000000
Solder sockets, solder cup	SAI-M23-BE-6-F	1	1224010000
PCB solder pins, 3.5 mm	SAI-M23-SE-6-3.5mm	1	1224020000
PCB solder sockets, 3.5 mm	SAI-M23-BE-6-3.5mm	1	1224030000
PCB solder pins, 10 mm	SAI-M23-SE-6-10mm	1	1224050000
PCB solder pins, 17 mm	SAI-M23-SE-6-17mm	1	1224060000
PCB solder sockets, 17 mm	SAI-M23-BE-6-17mm	1	1224040000

PCB hole-Ø: 1.5 mm

7-pole

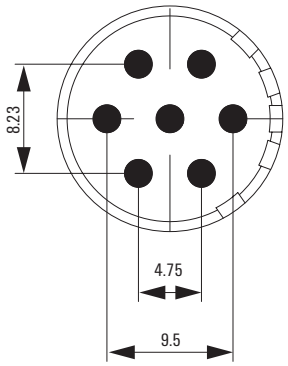

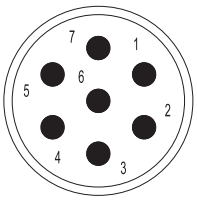

Male insert on plug side

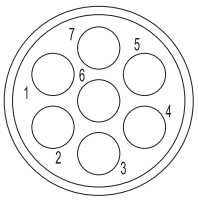

Female insert on plug side

Technical data

No. of poles	7
Contact number / diameter	7 x 2 mm

Ordering data

Pinout clockwise	Type	Qty.	Order No.
Solder pins, solder cup	SAI-M23-SE-7-F	1	1224070000
Solder sockets, solder cup	SAI-M23-BE-7-F	1	1224080000
PCB solder pins, 3.5 mm	SAI-M23-SE-7-3.5mm	1	1224090000
PCB solder sockets, 3.5 mm	SAI-M23-BE-7-3.5mm	1	1224100000
PCB solder pins, 10 mm	SAI-M23-SE-7-10mm	1	1224120000
PCB solder pins, 17 mm	SAI-M23-SE-7-17mm	1	1224130000
PCB solder sockets, 17 mm	SAI-M23-BE-7-17mm	1	1224110000

PCB hole-Ø: 0.8 mm (1.2 mm at 17 mm socket)

Inserts with solder contacts

9-pole

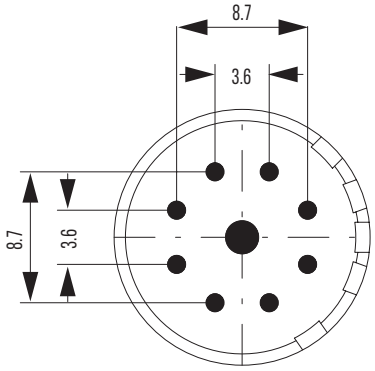

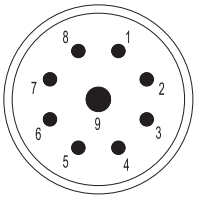

Male insert on plug side

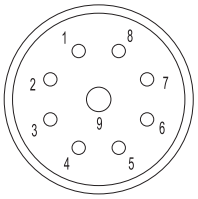

Female insert on plug side

Technical data

No. of poles	9
Contact number / diameter	8 x 1 mm + 1 x 2 mm

Ordering data

Pinout clockwise	Type	Qty.	Order No.
Solder pins, solder cup	SAI-M23-SE-9-F	1	1224490000
Solder sockets, solder cup	SAI-M23-BE-9-F	1	1224500000
PCB solder pins, 3.5 mm	SAI-M23-SE-9-3.5mm	1	1224510000
PCB solder pins, 10 mm	SAI-M23-SE-9-10mm	1	1224540000
PCB solder sockets, 10 mm	SAI-M23-BE-9-10mm	1	1224520000
PCB solder pins, 17 mm	SAI-M23-SE-9-17mm	1	1224550000
PCB solder sockets, 17 mm	SAI-M23-BE-9-17mm	1	1224530000
Pinout counter clockwise			
Solder pins, solder cup	SAI-M23-SE-9-F-G	1	1224730000
Solder sockets, solder cup	SAI-M23-BE-9-F-G	1	1224740000
PCB solder pins, 10 mm	SAI-M23-SE-9-10mm-G	1	1224770000
PCB solder sockets, 10 mm	SAI-M23-BE-9-10mm-G	1	1224750000
PCB solder pins, 17 mm	SAI-M23-SE-9-17mm-G	1	1224780000
PCB solder sockets, 17 mm	SAI-M23-BE-9-17mm-G	1	1224760000

PCB hole-Ø: 1 mm contact = 0.8 mm (1.2 mm at 17 mm socket)
2 mm contact = 1.5 mm

12-pole

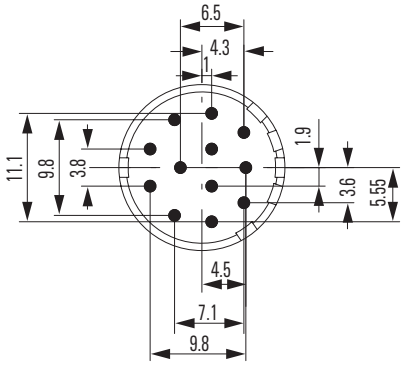

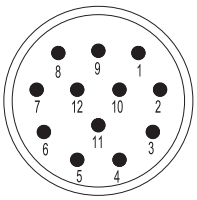

Male insert on plug side

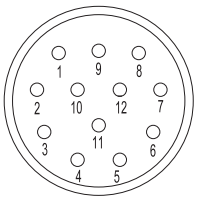

Female insert on plug side

Technical data

No. of poles	12
Contact number / diameter	12 x 1 mm

Ordering data

Pinout clockwise	Type	Qty.	Order No.
Solder pins, solder cup	SAI-M23-SE-12-F	1	1224140000
Solder sockets, solder cup	SAI-M23-BE-12-F	1	1224150000
PCB solder pins, 3.5 mm	SAI-M23-SE-12-3.5mm	1	1224160000
PCB solder pins, 3.5 mm, with PE contact pin 9	SAI-M23-SE-12-3.5mm-PE	1	1224180000
PCB solder sockets, 3.5 mm, with PE contact pin 9	SAI-M23-BE-12-3.5mm-PE	1	1224190000
PCB solder pins, 10 mm	SAI-M23-SE-12-10mm	1	1224220000
PCB solder sockets, 10 mm	SAI-M23-BE-12-10mm	1	1224170000
PCB solder pins, 17 mm	SAI-M23-SE-12-17mm	1	1224230000
PCB solder sockets, 17 mm	SAI-M23-BE-12-17mm	1	1224210000
Pinout counter clockwise			
Solder pins, solder cup	SAI-M23-SE-12-F-G	1	1224560000
Solder sockets, solder cup	SAI-M23-BE-12-F-G	1	1224570000
PCB solder pins, 3.5 mm	SAI-M23-SE-12-3.5mm-G	1	1224580000
PCB solder pins, 10 mm	SAI-M23-SE-12-12mm-G	1	1224630000
PCB solder sockets, 10 mm	SAI-M23-BE-12-10mm-G	1	1224590000
PCB solder pins, 10 mm, with PE contact pin 9	SAI-M23-SE-12-10mm-PE-G	1	1224620000
PCB solder sockets, 10 mm, with PE contact pin 9	SAI-M23-BE-12-10mm-PE-G	1	1224610000
PCB solder pins, 17 mm	SAI-M23-SE-12-17mm-G	1	1224640000

PCB hole-Ø: 0.8 mm (1.2 mm at 17 mm socket)

Inserts with solder contacts

16-pole

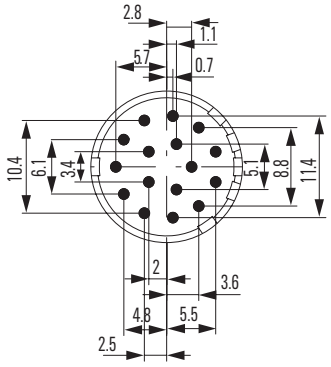

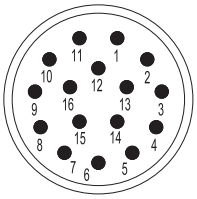

Male insert on plug side

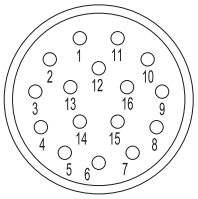

Female insert on plug side

Technical data

No. of poles	16
Contact number / diameter	6 x 1 mm

Ordering data

Pinout clockwise	Type	Qty.	Order No.
Solder pins, solder cup	SAI-M23-SE-16-F	1	1224240000
Solder sockets, solder cup	SAI-M23-BE-16-F	1	1224250000
PCB solder pins, 3.5 mm	SAI-M23-SE-16-3.5mm	1	1224260000
PCB solder sockets, 3.5 mm	SAI-M23-BE-16-3.5mm	1	1224270000
PCB solder pins, 10 mm	SAI-M23-SE-16-10mm	1	1224290000
PCB solder pins, 17 mm	SAI-M23-SE-16-17mm	1	1224310000
PCB solder sockets, 17 mm	SAI-M23-BE-16-17mm	1	1224280000

PCB hole-Ø: 0.8 mm (1.2 mm at 17 mm socket)

17-pole

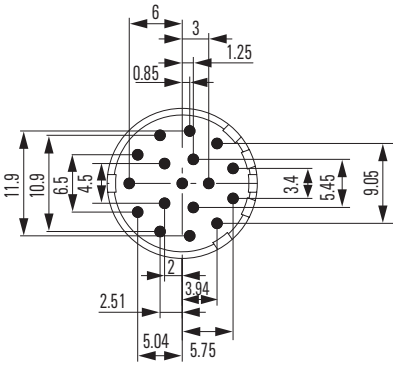

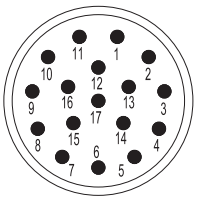

Male insert on plug side

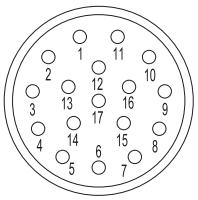

Female insert on plug side

Technical data

No. of poles	17
Contact number / diameter	17 x 1 mm

Ordering data

Pinout clockwise	Type	Qty.	Order No.
Solder pins, solder cup	SAI-M23-SE-17-F	1	1224320000
Solder sockets, solder cup	SAI-M23-BE-17-F	1	1224330000
PCB solder pins, 3.5 mm	SAI-M23-SE-17-3.5mm	1	1224340000
PCB solder pins, 10 mm	SAI-M23-SE-17-10mm	1	1224370000
PCB solder sockets, 10 mm	SAI-M23-BE-17-10mm	1	1224350000
PCB solder pins, 17 mm	SAI-M23-SE-17-17mm	1	1224380000
PCB solder sockets, 17 mm	SAI-M23-BE-17-17mm	1	1224360000
Pinout counter clockwise			
Solder pins, solder cup	SAI-M23-SE-17-F-G	1	1224650000
Solder sockets, solder cup	SAI-M23-BE-17-F-G	1	1224660000
PCB solder pins, 3.5 mm	SAI-M23-SE-17-3.5mm-G	1	1224670000
PCB solder pins, 10 mm	SAI-M23-SE-17-10mm-G	1	1224710000
PCB solder socket, 10 mm	SAI-M23-BE-17-10mm-G	1	1224680000
PCB solder pins, 17 mm	SAI-M23-SE-17-17mm-G	1	1224720000
PCB solder sockets, 17 mm	SAI-M23-BE-17-17mm-G	1	1224690000

PCB hole-Ø: 0.8 mm (1.2 mm at 17 mm socket)

Inserts with solder contacts

19-pole

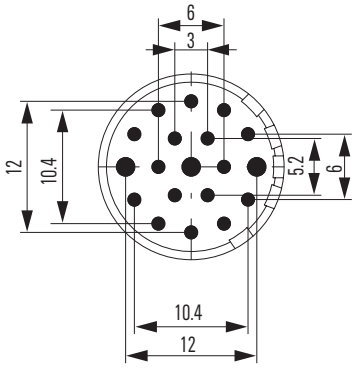

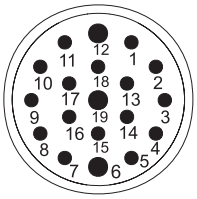

Male insert on plug side

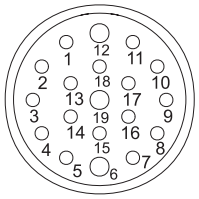

Female insert on plug side

Technical data

No. of poles	19
Contact number / diameter	16 x 1 mm + 3 x 1.5 mm

Ordering data

Pinout clockwise	Type	Qty.	Order No.
Solder pins, solder cup	SAI-M23-SE-19-F	1	**1224390000**
Solder sockets, solder cup	SAI-M23-BE-19-F	1	**1224400000**
PCB solder pins, 3.5 mm	SAI-M23-SE-19-3.5mm	1	**1224410000**
PCB solder pins, 3.5 mm, with PE contact pin 12	SAI-M23-SE-19-3.5mmPE12	1	**1224460000**
PCB solder sockets, 3.5 mm, with PE contact pin 12	SAI-M23-BE-19-3.5mm-PE	1	**1224440000**
PCB solder pins, 10 mm	SAI-M23-SE-19-10mm	1	**1224470000**
PCB solder sockets, 10 mm	SAI-M23-BE-19-10mm	1	**1224420000**
PCB solder pins, 10 mm, with PE contact pin 12	SAI-M23-SE-19-10mm-PE	1	**1224430000**
PCB solder pins, 17 mm	SAI-M23-SE-19-17mm	1	**1224480000**
PCB solder sockets, 17 mm	SAI-M23-BE-19-17mm	1	**1224450000**

PCB hole-Ø: 1 mm contact = 0.8 mm (1.2 mm at 17 mm socket)
1.5 mm contact = 1.5 mm

M23 connector for signal transmission

Overview of inserts and housings

This table shows the different combination possibilities of the inserts and solder pins, with housings.

Solder pin affiliation

Type	Order No.	Solder pin length		
		3.5 mm	10 mm	17 mm
SAIE-M23-S-VW	1169940000		X	X
SAIE-M23-S-RM	1169950000			X
SAIE-M23-S-EM	1169970000			X
SAIE-M23-S-HW	1169990000	X	X	X

Device connector (front panel)

Male insert

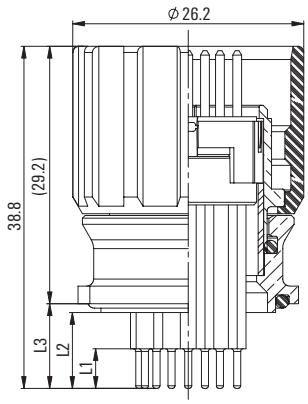

Male insert	L1	L2	L3
10 mm	4.5	10.3	11.65
17 mm	4.5	17.3	18.65

Female insert

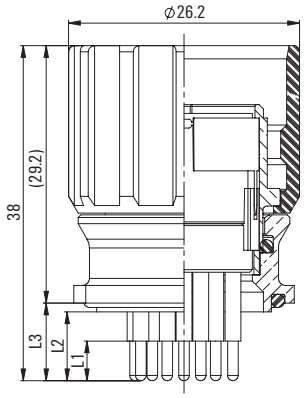

Female insert	L1	L2	L3
10 mm	4.5	5.3	11.1
17 mm	4.5	12.3	18.1

Ordering data

Type	Qty.	Order No.
SAIE-M23-S-VW	1	1169940000

Device connector with knurled nut

Male insert

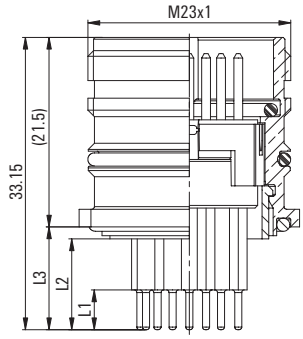

Male insert	L1	L2	L3
10 mm	-	-	-
17 mm	4.5	8.6	9.6

Female insert

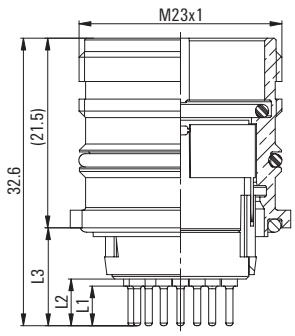

Female insert	L1	L2	L3
10 mm	-	-	-
17 mm	4.5	7.8	8.8

Ordering data

Type	Qty.	Order No.
SAIE-M23-S-RM	1	1169950000

Device connector (single-hole mount)

Male insert

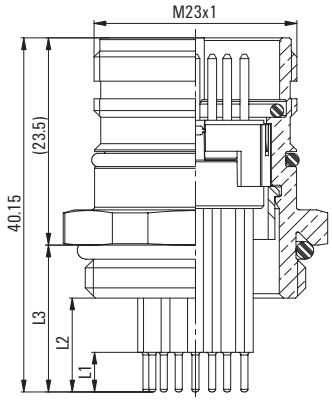

Male insert	L1	L2	L3
10 mm	-	-	-
17 mm	4.5	10.65	16.65

Female insert

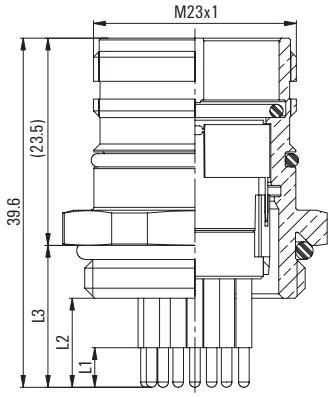

Female insert	L1	L2	L3
10 mm	-	-	-
17 mm	4.5	10.1	16.1

Ordering data

Type	Qty.	Order No.
SAIE-M23-S-EM	1	1169970000

Device connector (back panel)

Male insert

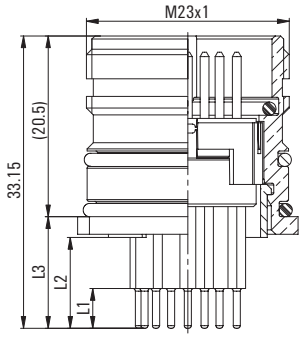

Male insert	L1	L2	L3
10 mm	4.5	10.3	12.65
17 mm	4.5	17.3	19.65

Female insert

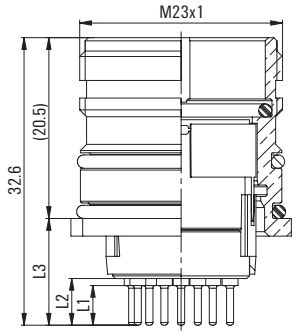

Female insert	L1	L2	L3
10 mm	4.5	5.3	12.1
17 mm	4.5	12.3	19.1

Ordering data

Type	Qty.	Order No.
SAIE-M23-S-HW	1	1169990000

Device connector with knurled nut

Male insert

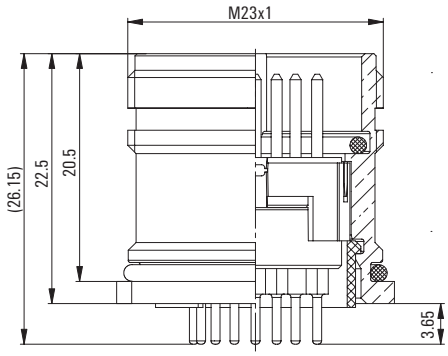

This solder pin length connector has a solder pin insert with 3.5 mm solder pin length.
3.5 mm solder inserts can only be combined with this plug-in connector and only in the male version.

Ordering data

Type	Qty.	Order No.
SAIE-M23-S-RM	1	1169990000

Housing

For cables with outer diameter of: 7–12 mm

Cable connector

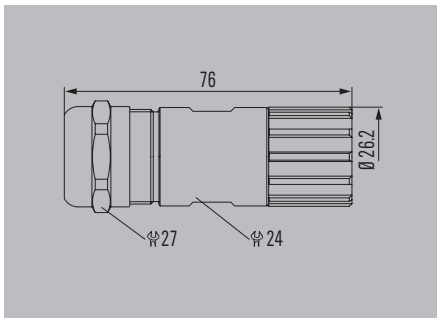

Ordering data

Type	Qty.	Order No.
SAI-M23-GS-L-7/12	1	1995800000

Coupling connector

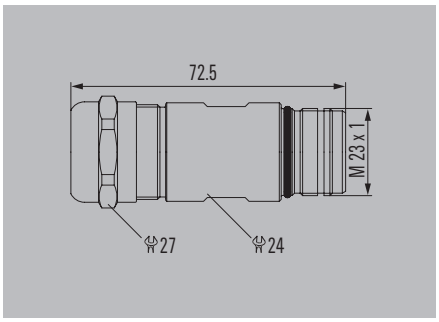

Ordering data

Type	Qty.	Order No.
SAI-M23-KS-L-7/12	1	1170270000

J

Angled connector

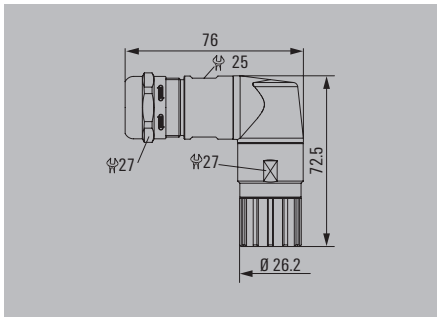

Ordering data

Type	Qty.	Order No.
SAIL-M23-GSW-L-7/12	1	1170280000

Angled connector (coupling)

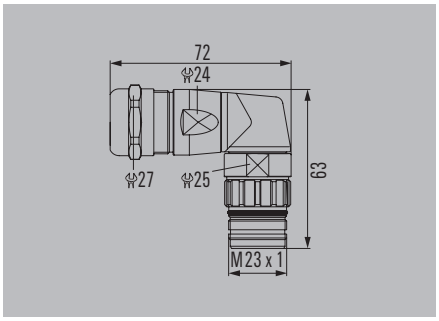

Ordering data

Type	Qty.	Order No.
SAIL-M23-KSW-L-7/12	1	1170290000

Built-in connector

With 3.2-mm mounting holes

Device connector (front panel)

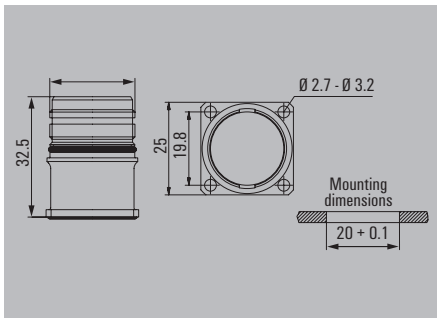

Ordering data

Type	Qty.	Order No.
SAIE-M23-L-VW	1	1170300000

Device connector with knurled nut

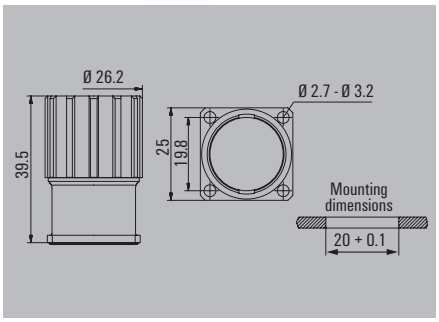

Ordering data

Type	Qty.	Order No.
SAIE-M23-L-RM	1	1170310000

Device connector (single-hole mount)

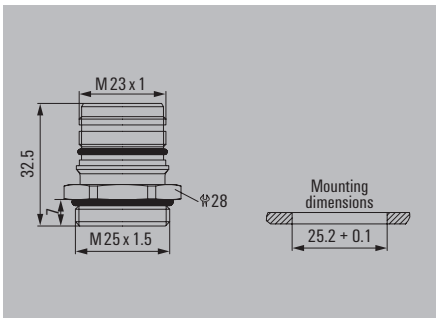

Ordering data

Type	Qty.	Order No.
SAIE-M23-L-EM	1	1170320000

Device connector (angled)

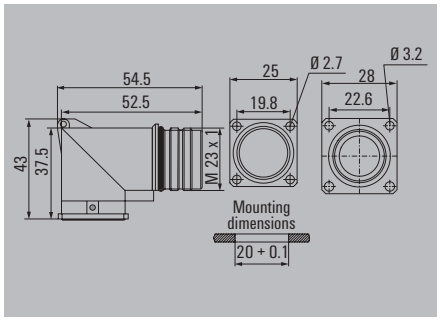

Ordering data

Type	Qty.	Order No.
SAIE-M23-L-W	1	1170330000

Device connector (back panel)

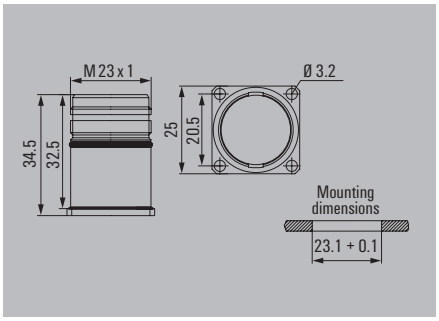

Ordering data

Type	Qty.	Order No.
SAIE-M23-L-HW	1	1170340000

M23 connector for power transmission

Inserts

5 + PE

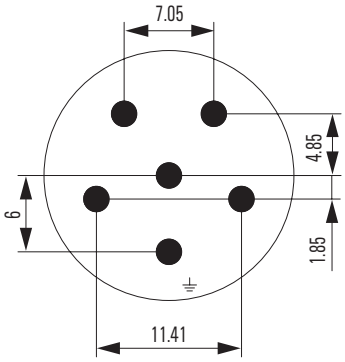

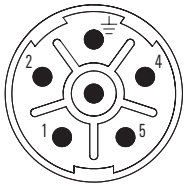

6 times male, 2 mm

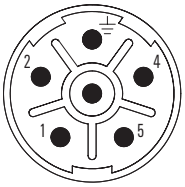

6 times female, 2 mm

Ordering data

	Type	Qty.	Order No.
6 times male 2 mm	SAI-M23-SE-L-6	1	**1170350000**
6 times female, 2 mm	SAI-M23-BE-L-6	1	**1170370000**

4/4

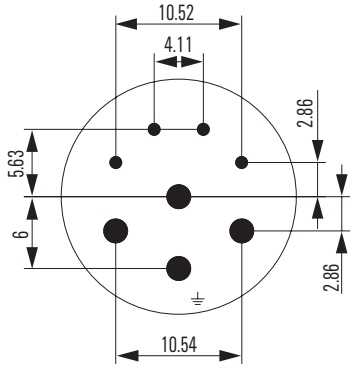

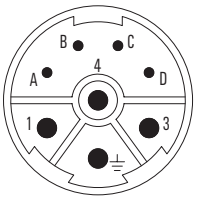

4 times 1-mm male and 4 times 2-mm male

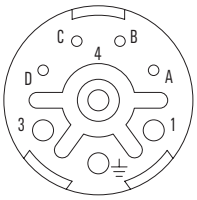

4 times 1-mm female and 4 times 2-mm female

Ordering data

	Type	Qty.	Order No.
4 times 1-mm male and 4 times 2-mm male	SAI-M23-SE-L-4/4	1	**1170380000**
4 times 1-mm female and 4 times 2-mm female	SAI-M23-BE-L-4/4	1	**1995810000**

Contacts

Male, 1 mm

0.25 - 1.00

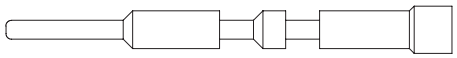

Ordering data

	Type	Qty.	Order No.
1 mm Male (0.25-1.00)	SAI-M23-KSC-0.25-1.0	50	1170390000

Female, 1 mm

0.25 – 1.00

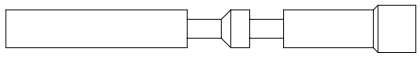

Ordering data

	Type	Qty.	Order No.
1 mm Socket (0.25-1.00)	SAI-M23-KBC-0.25-1.0	50	1995830000

Male, 2 mm

0.75 – 2.5

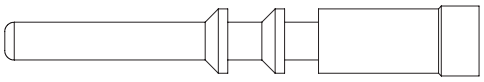

2.5 – 4.00

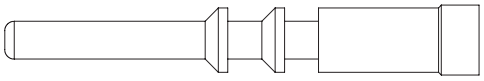

Ordering data

	Type	Qty.	Order No.
2 mm Male (0.75-2.5)	SAI-M23-KSC-L-0.75-2.5	50	1170400000
2 mm Male (2.5-4.00)	SAI-M23-KSC-L-2.5-4.0	50	1170410000

Female, 2 mm

0.75 – 2.5

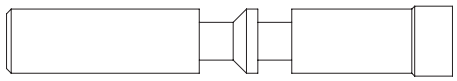

2.5 – 4.00

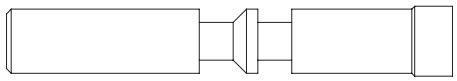

Ordering data

	Type	Qty.	Order No.
2 mm Socket (0.75-2.5)	SAI-M23-KBC-L-0.75-2.5	50	1995820000
2 mm Socket (2.5-4.00)	SAI-M23-KBC-L-2.5-4.0	50	1170420000

Technical data

No. of poles		5 + PE	4/4	
Number of contacts		6	4	4
Contact-Ø	mm	2	1	2

Note: You can find tools in chapter K. All female connector contacts have SLS technology except for 1170230000 and 1170240000. Other information is available on page J. 44.

M23 cables

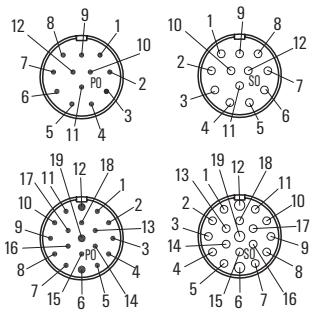

Male Female

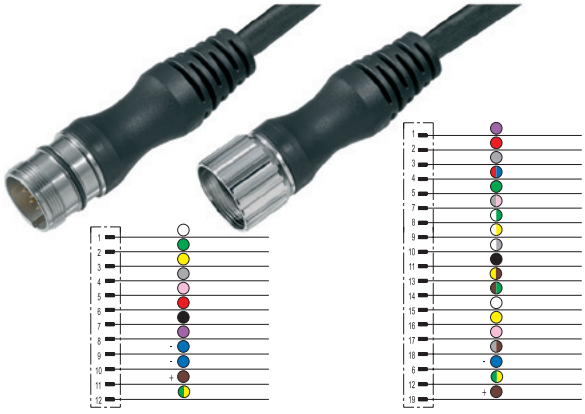

Ordering data

Male, straight	Male 12-pole Type	Order No.	Male 19-pole Type	Order No.
1 m	SAIS-M23-12P-ST-1,0M	1906280100	SAIS-M23-19P-ST-1,0M	1818160100
Male, angled				
1 m	SAIS-M23-12P-AN-1,0M	1906290100	SAIS-M23-19P-AN-1,0M	1818090100
Female, straight				
1 m	SAIB-M23-12P-ST-1,0M	1886440100	SAIB-M23-19P-ST-1,0M	1818180100
Female, angled				
1 m	SAIB-M23-12P-AN-1,0M	1877440100	SAIB-M23-19P-AN-1,0M	1818140100
Note	ST = straight AN = 90° elbow		Other versions on request	

Standard cable lengths

All cables listed under the ordering data have a length of 1.5 metres. The last four ordering digits must be changed when ordering other standard cable lengths.	1.5 m	xxxxxx0150
	3.0 m	xxxxxx0300
	5.0 m	xxxxxx0500
	10.0 m	xxxxxx1000

Technical data

Rated current	8 A
Protection degree	IP 67
Core cross-section	mm²
Contact surface	Gold-plated
Temperature range of housing	-25...+85 °C
Rated voltage (acc. to VDE standard 0110 ISO group C)	150 V

Chapter W includes additional technical specifications for the cable

Dimensioned drawing

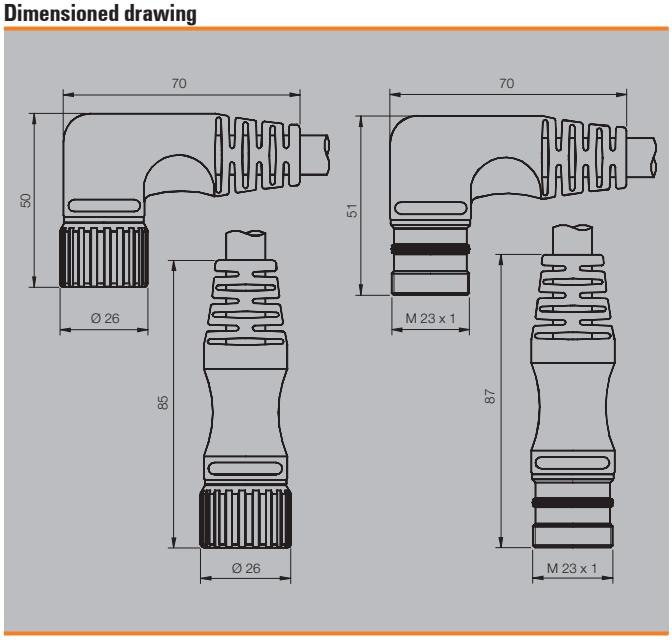

With M23 outlet

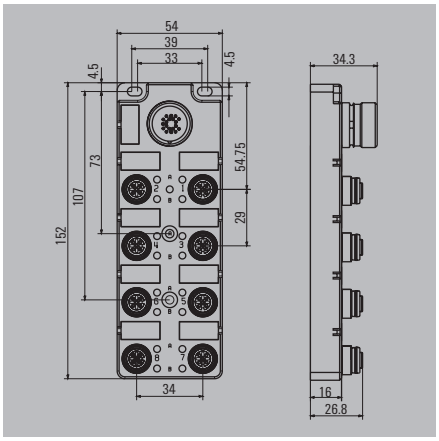

Ordering data

Complete modules			
	4 channel		
	8 channel		
Note			

SAI-4/8-S		4-pole
Type	**QTY**	**Order No.**
SAI-4-S 4P FC	1	**1847960000**
SAI-8-S 4P FC	1	**1847920000**
Other versions on request		

SAI-4/8-S		5-pole
Type	**QTY**	**Order No.**
SAI-4-S 5P FC	1	**1847970000**
SAI-8-S 5P FC	1	**1848040000**
Other versions on request		

Technical data

Operating voltage	10...30 V
Current of continuous busbars	2 A
max. current-carrying capacity per slot	4 A
Total current	9 A
Pollution severity	3
Protection degree	IP 67
Ambient temperature range	-25...+80 °C
Housing main material	PA 6 GF
Contact carrier material	PBT (UL 94 V0)
Base material of contacts	CuZn, pre-nickeled, gold-plated
screw socket	CuZn, nickel-plated
Housing colour	grey, RAL 7032
Flammability class UL 94	V-0
Clamping range of hood-version	
Suitable for dragline cable (fixed cable connection)	

Wiring diagram

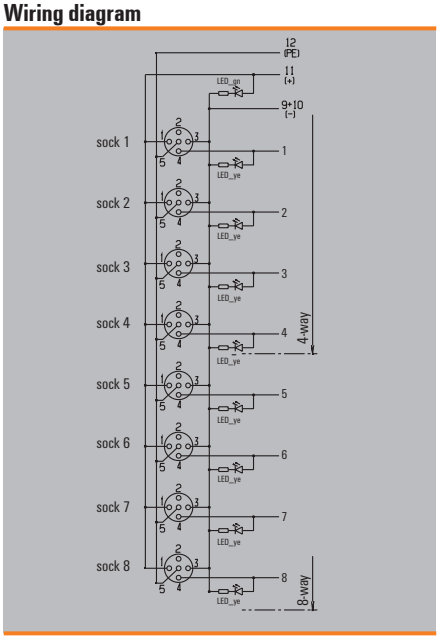

Wiring diagram

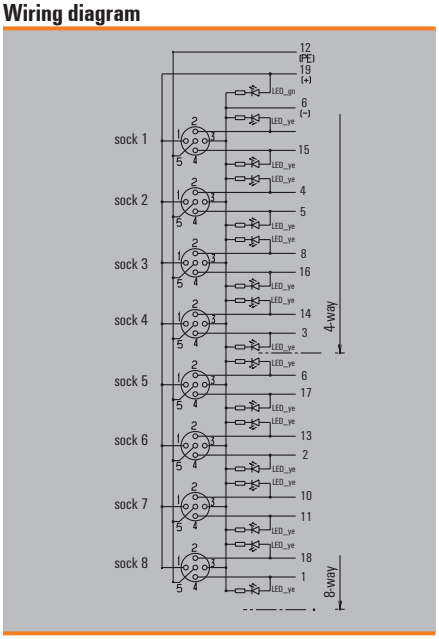

SAI distributor M12 with M23

With M23 outlet on face end

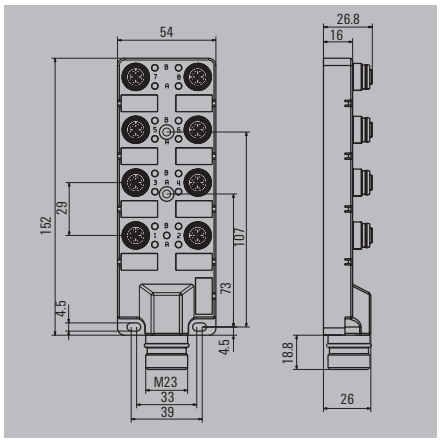

Ordering data

Complete modules		SAI-4/8-SH		4-pole	SAI-4/8-SH		5-pole
		Type	QTY	Order No.	Type	QTY	Order No.
	4 channel	SAI-4-SH 4P FC	1	1859110000	SAI-4-SH 5P FC	1	1859130000
	8 channel	SAI-8-SH 4P FC	1	1859120000	SAI-8-SH 5P FC	1	1859140000
Note							

Technical data

Operating voltage	10...30 V
Current of continuous busbars	2 A
max. current-carrying capacity per slot	4 A
Total current	9 A
Pollution severity	3
Protection degree	IP 67
Ambient temperature range	-25...+80 °C
Housing main material	PA 6 GF
Contact carrier material	PBT (UL 94 V0)
Base material of contacts	CuZn, pre-nickeled, gold-plated
screw socket	CuZn, nickel-plated
Housing colour	grey, RAL 7032
Flammability class UL 94	V-0
Clamping range of hood-version	
Suitable for dragline cable (fixed cable connection)	

Wiring diagram

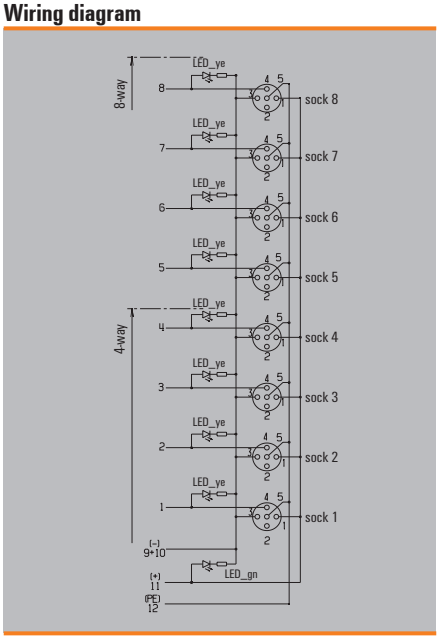

Wiring diagram

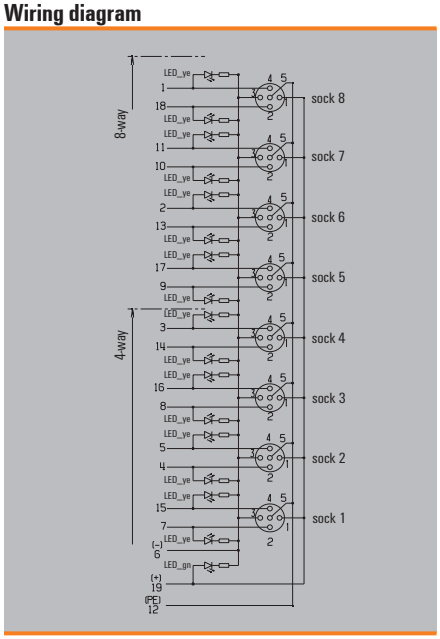

With M23 outlet

SAI-4/8-M23

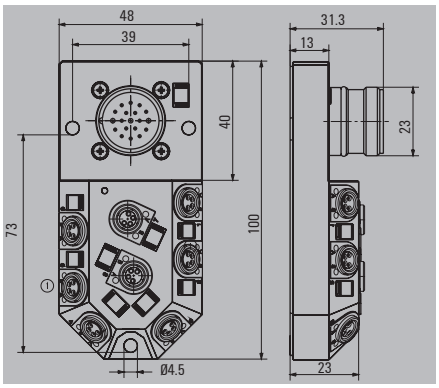

Ordering data

SAI-4/8-M23		M23
Type	**QTY**	**Order No.**
SAI-4-M23 4P M8	1	1784660000
SAI-8-M23 4P M8	1	1784650000
Other versions on request		

4-pole	
	4 channel
	8 channel
Note	

Technical data

Operating voltage	10...30 V
Current of continuous busbars	2 A
max. current-carrying capacity per slot	2 A
Total current	8 A
Pollution severity	3
Protection degree	IP 68
Ambient temperature range	-20...+90 °C
Housing main material	Pocan
Contact carrier material	PBT (UL 94 V0)
Base material of contacts	CuZn, pre-nickeled, gold-plated
screw socket	CuZn, nickel-plated
Housing colour	grey, RAL 7032
Flammability class UL 94	V-0
Clamping range of hood-version	
Suitable for dragline cable (fixed cable connection)	

Dimensioned drawing

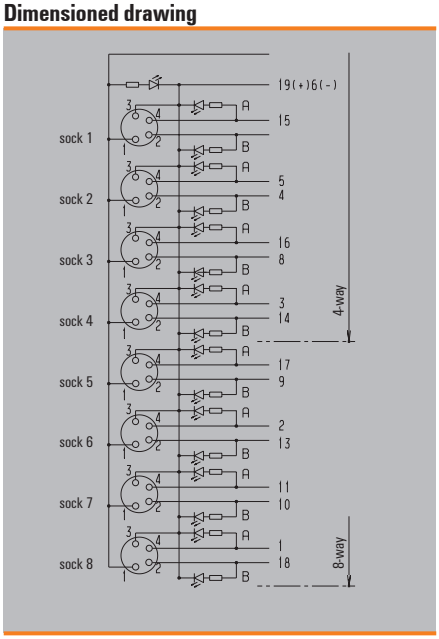

Cable connector

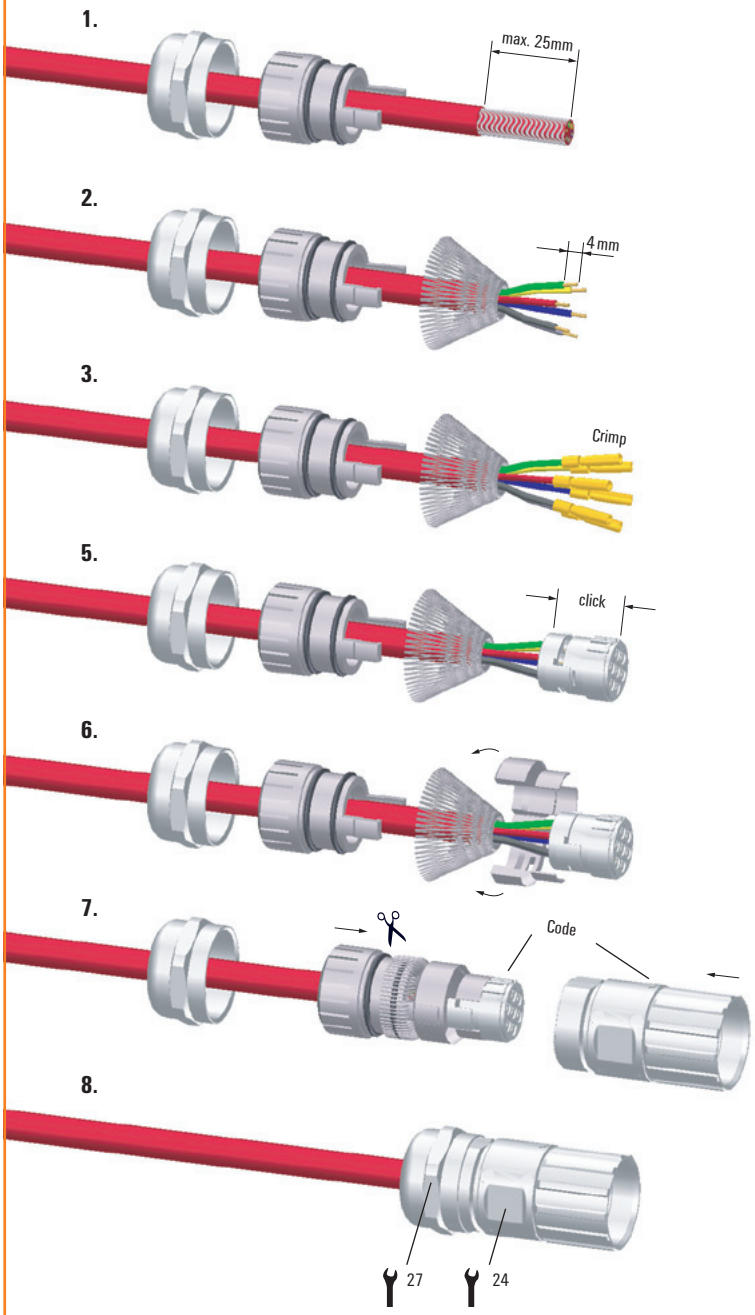

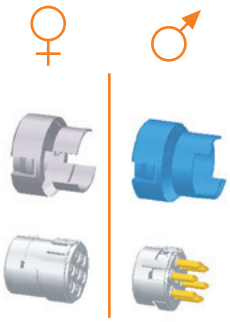

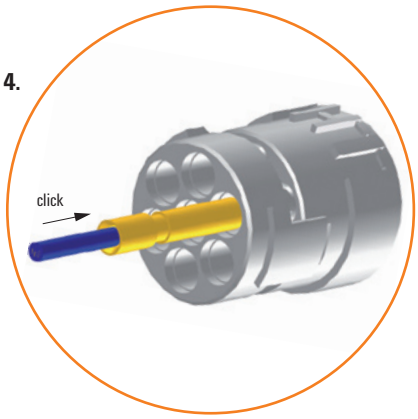

Angled connector

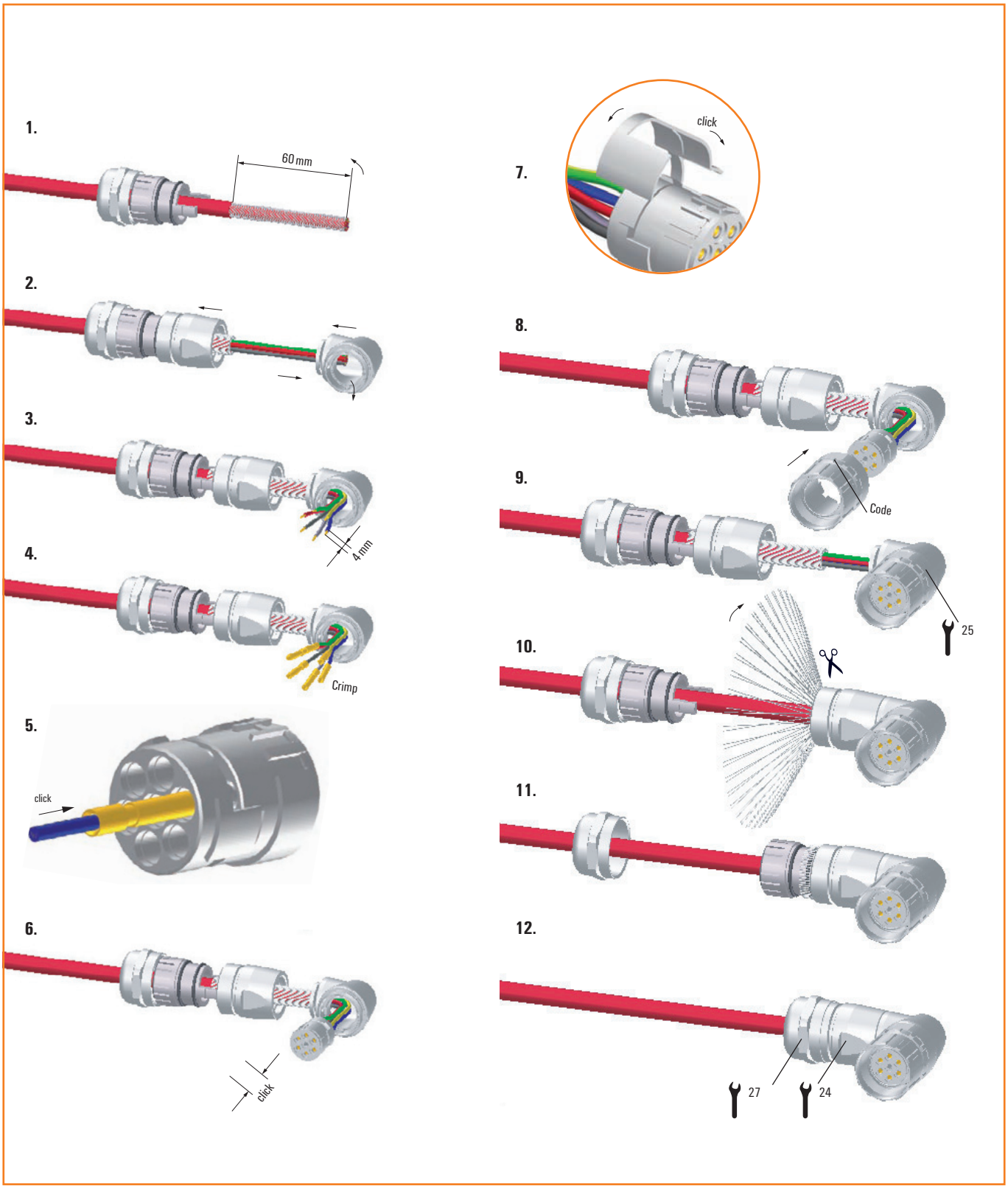

Device connector with knurled nut

1.

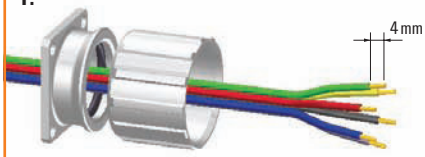

2.

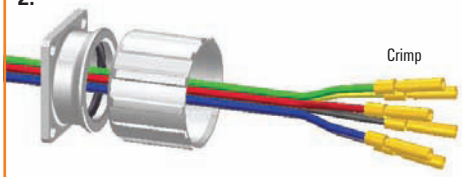

3.

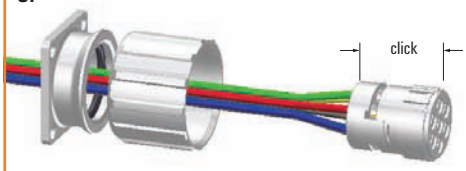

5.

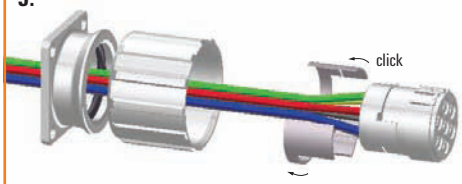

6.

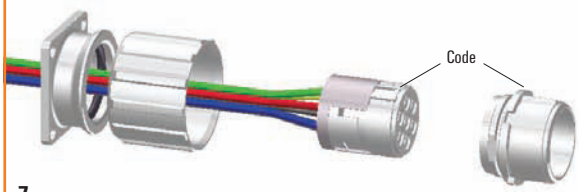

7.

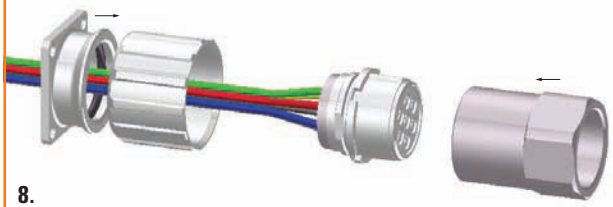

8.

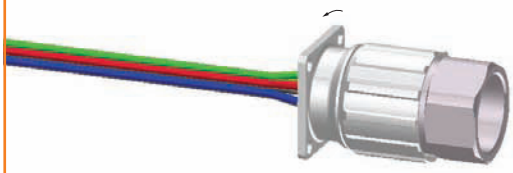

1238870000

4.

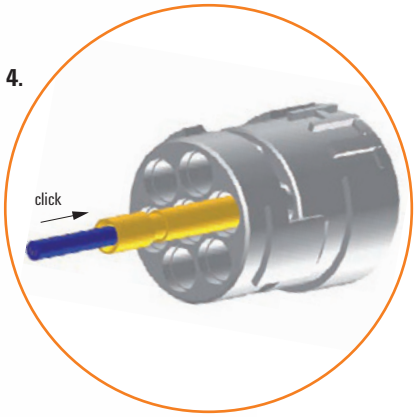

Device connector, male

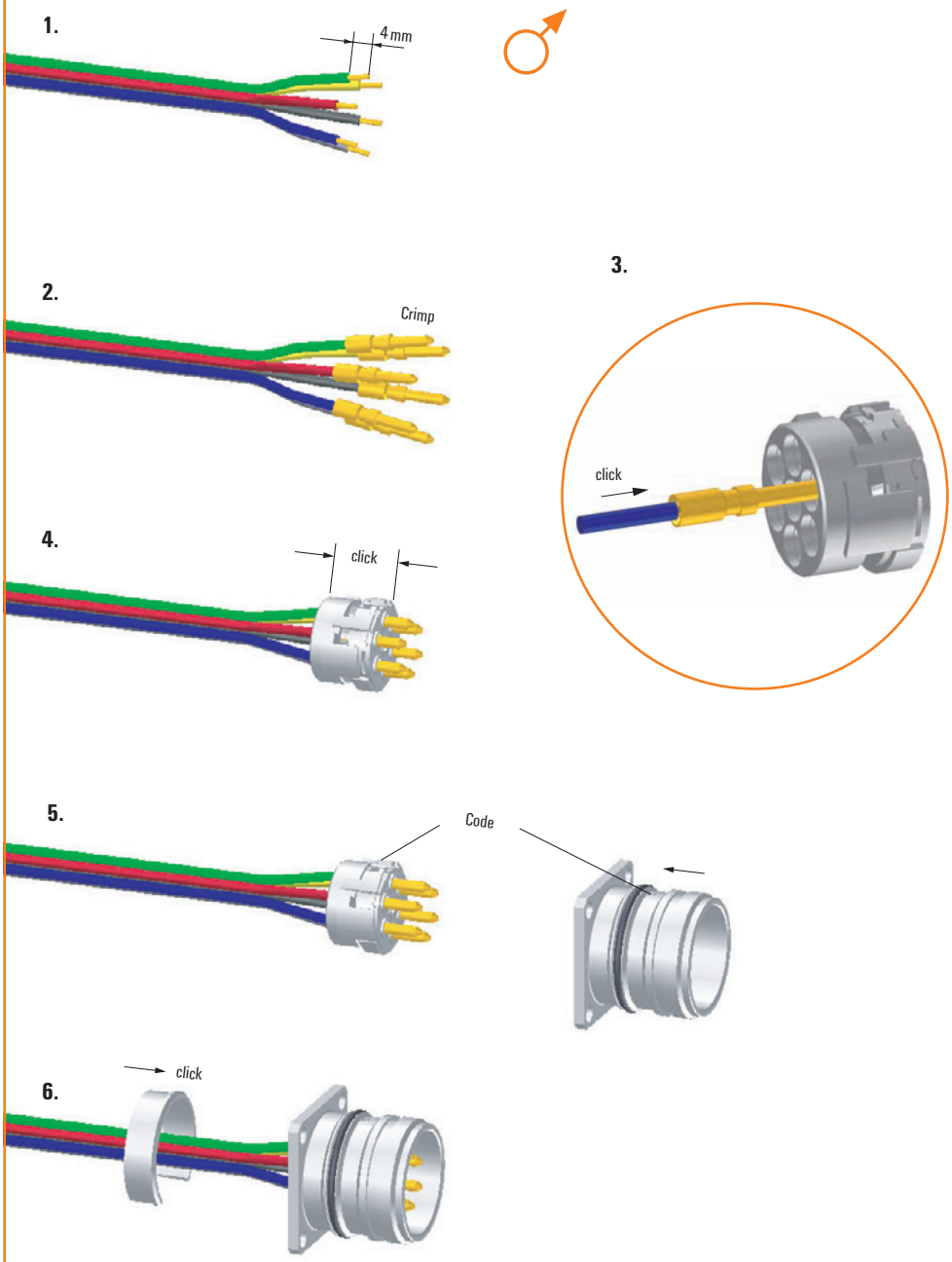

Device connector, female

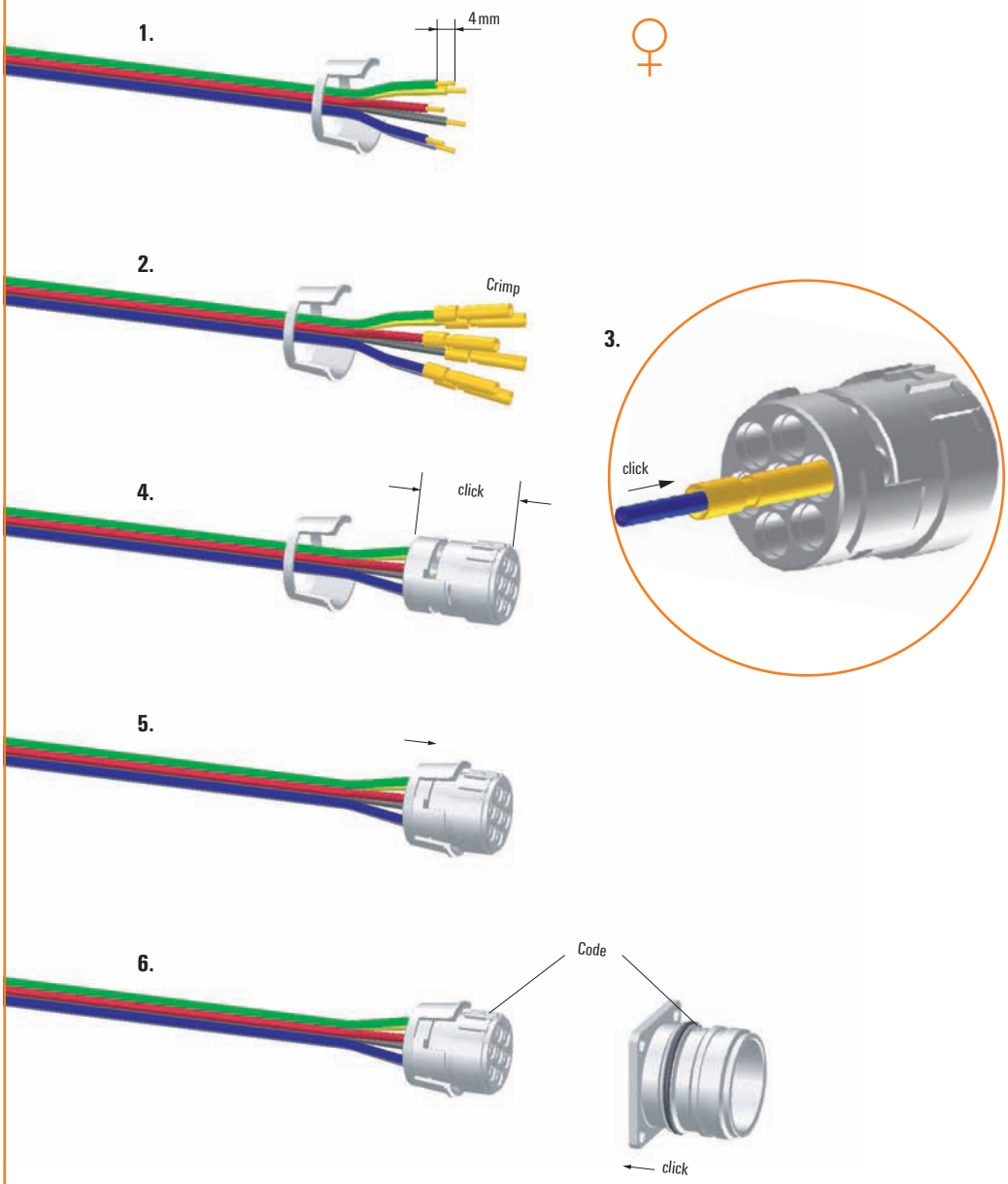

Cable connector

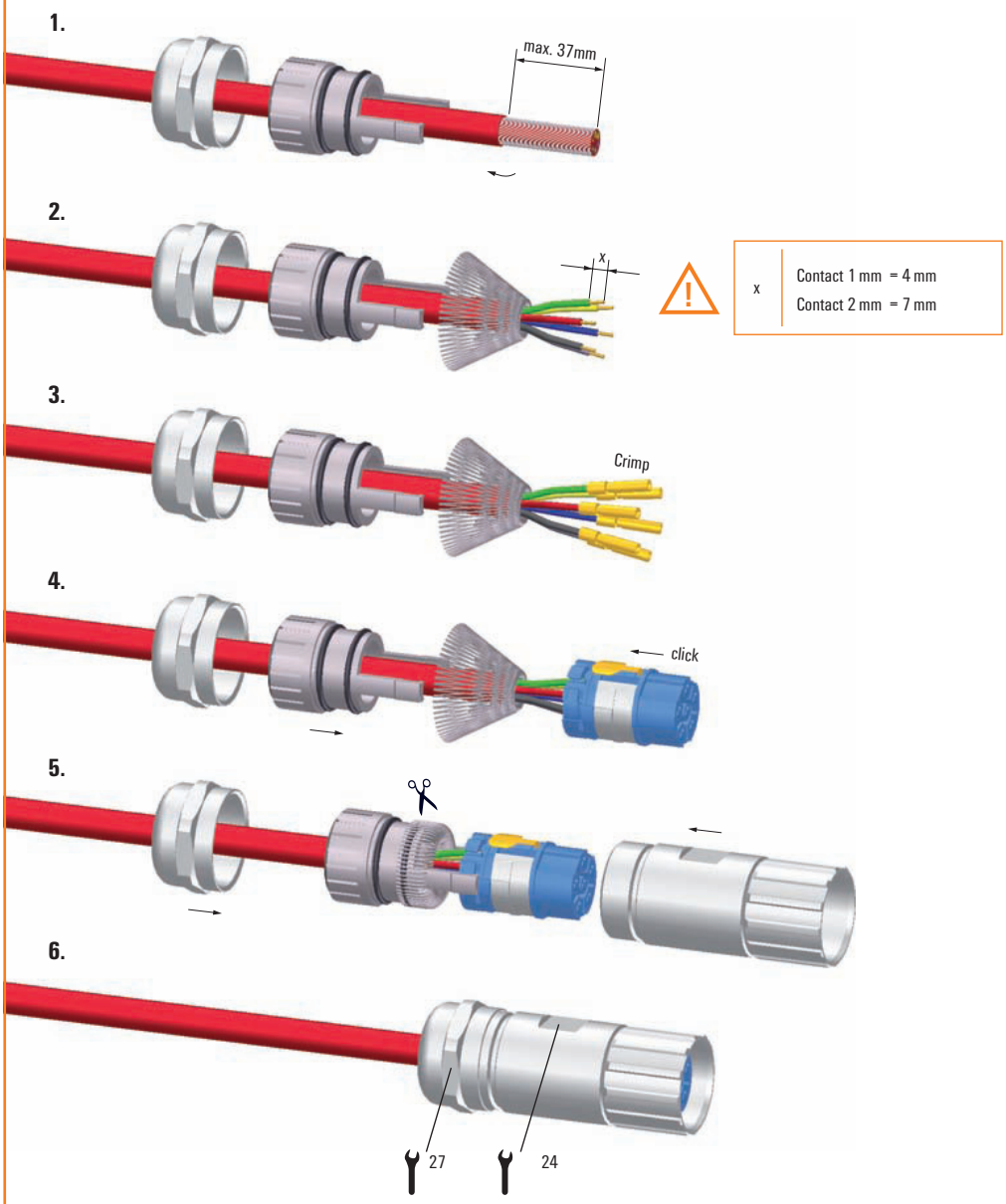

Device connector

1.

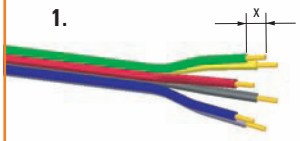

x	Contact 1 mm = 4 mm Contact 2 mm = 7 mm

2.

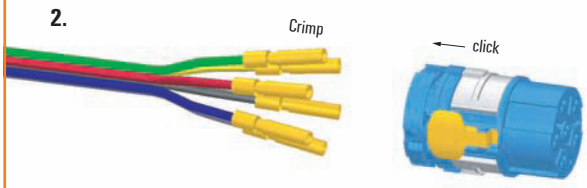

3.

4.

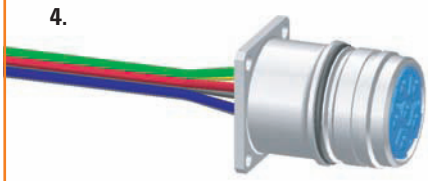

Device connector

1.

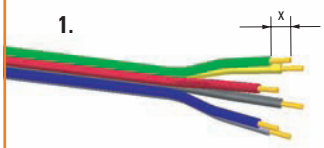

x	Contact 1 mm = 4 mm Contact 2 mm = 7 mm

2.

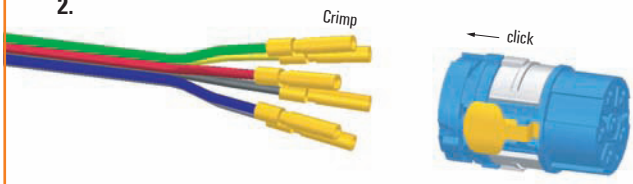

3.

4.

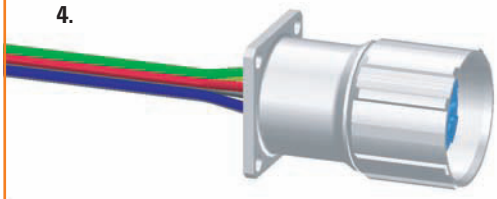

Device connector, single-hole mount

1.

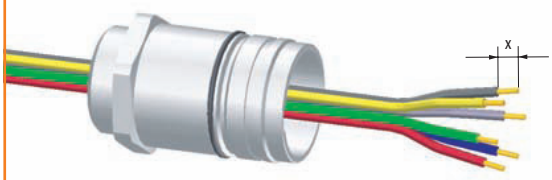

x	Contact 1 mm = 4 mm Contact 2 mm = 7 mm

2.

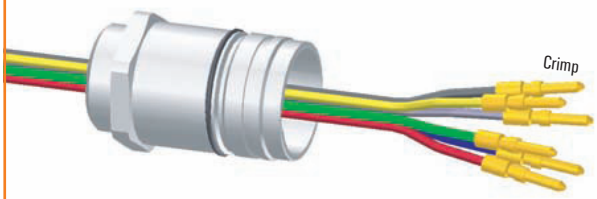

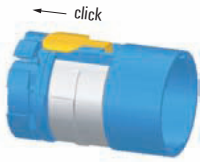

3.

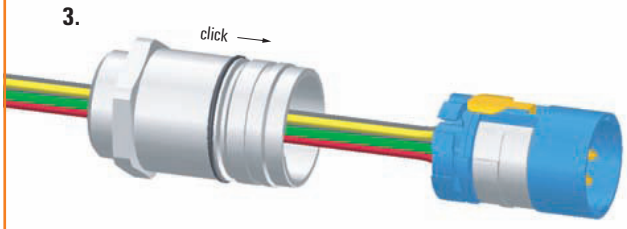

4.

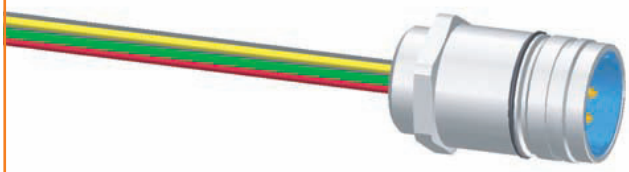

M23 connector

Easy to assemble

- An integrated approach for all plug sizes
- A patented assembly module consisting of terminal insert and insulating body
- Assembly and shield connection combined into one step
- Simple, quick and safe assembly in the housing

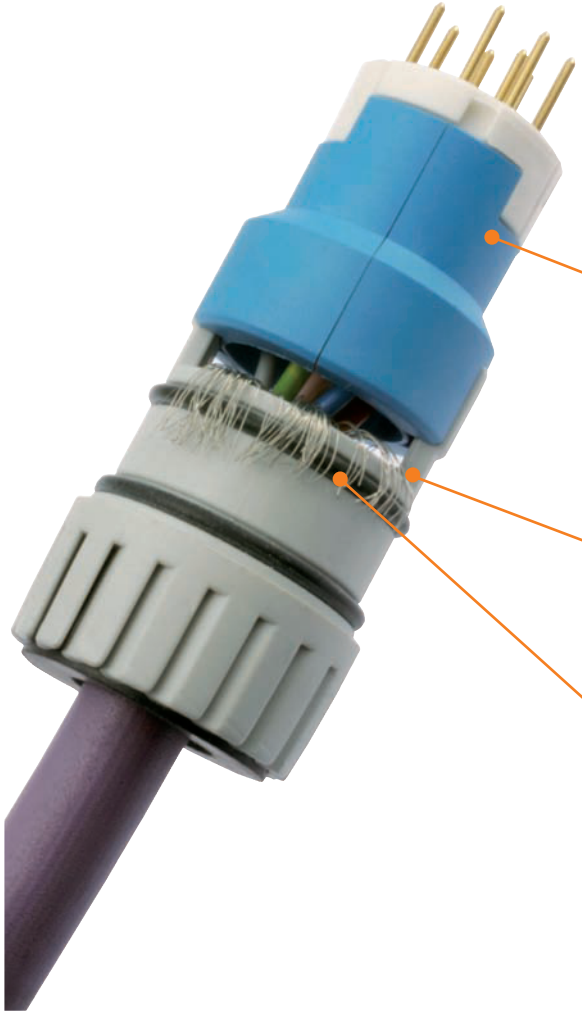

Flexibility

Total modularity means flexibility Male or female inserts can even be used with any of the housing types for the M23 power connectors.

The concise layout of this connector range and the reduced number of individual parts has clear benefits for the user – quicker assembly and easier installation.

The spacer sleeves are colour-coded for the male and female inserts.

Assembly and shield connection are combined into one step.

The snap-on terminal insert protects the cable outlet from getting twisted.

The variable shield connection ensures secure EMC protection for both light and heavy shielding braid.

Secure contact with SLS® technology

The new, premium-grade contact – the spring-loaded socket (SLS®) system

- Integrated spring takes the pin contact and clasps it radially
- Outstanding electrical characteristics with the most secure contact
- Quick assembly: solder contacts already tin-plated

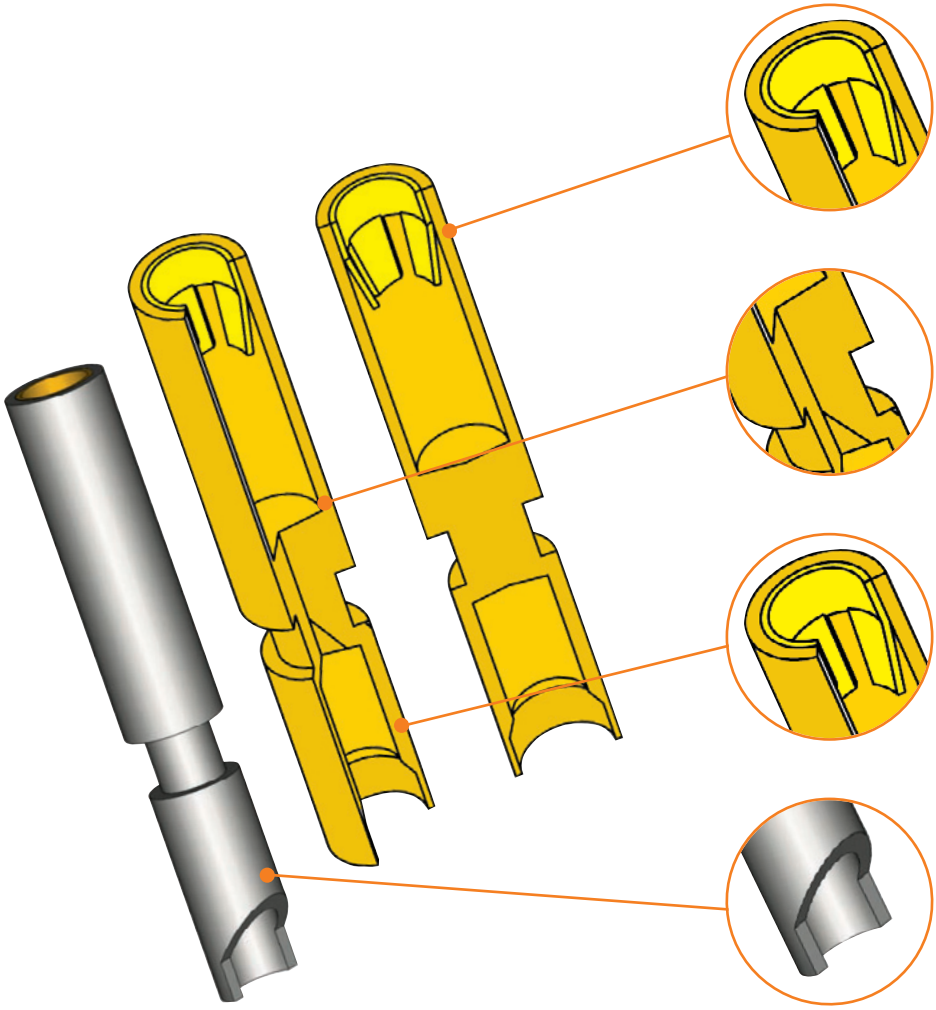

The radially clasped spring mechanism made from copper beryllium ensures minimal insertion force and high number of plugging cycles.

The cylindrical outer shape of the female contact guarantees that the plugging process is properly centred.

Gold-plated contact surfaces provides minimal contact resistances.

Tin plated surfaces on the solder contacts helps to save time during assembly.

Euro-Lock system® for a secure mount

Euro-Lock system® – the patented interlock system

- The integrated support clip locks the contacts into the insulating body
- Contacts are easy to install and remove
- No special tool is required

High-quality cable gland

- Replaceable male or female inserts in each type of housing
- Integrated strain relief mechanism with patented HSK cable gland
- Internationally certified, with proven and established quality

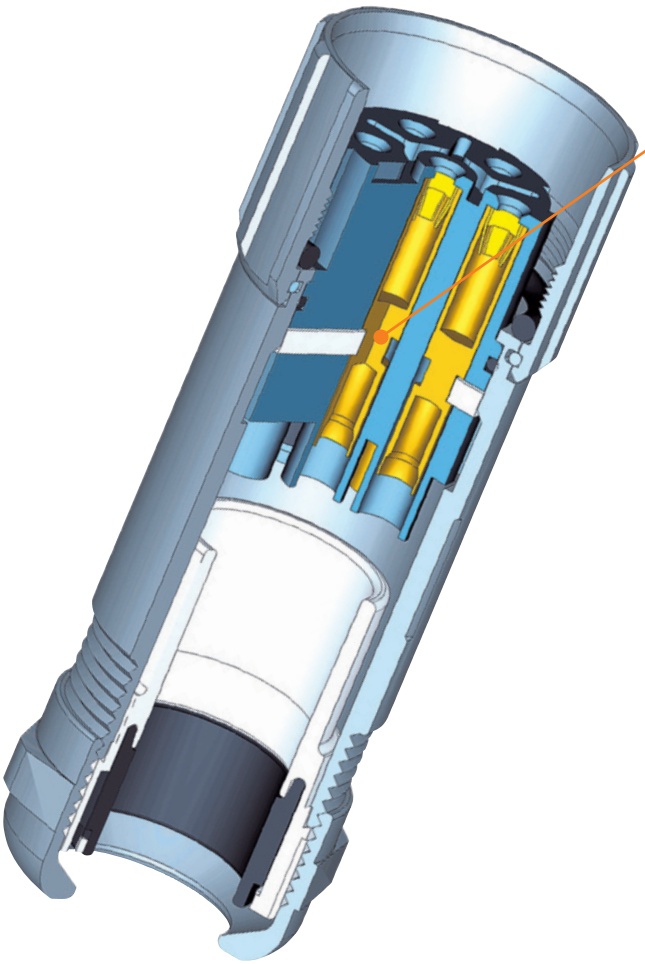

Secure contact interlock

Quick assembly

Simple removal of contacts

Complete installation and removal without any special tools

Tools and markers

Tools and markers	Introduction	K.2
	Screwty®	K.4
	Cutting tools	K.7
	Sheathing and insulation stripping tools	K.8
	Stripping and cutting tools	K.9
	M23 crimping tools	K.12
	Identification systems	K.14

SAI tools

The Screwty® is a state-of-the-art tool that features a unique, patented retention method. The adjustable torque ensures that the connectors have actually been sealed tightly. The Screwty® attachment for M23 is also very important because the sealing method for the M8 and M12 connectors are comparable to the M23.

The fact that the Screwty® attachment slips back is a major advantage of this system. This means that it does not have to be re-applied, as would be the case when using an open ended wrench. There is also no risk that the screw can loosen when you turn the tool the wrong way since the Screwty® is only capable of exerting force in one direction.

It is also possible to put other tool attachments on the 1/4"-drive. This allows the use of torque spanner wrenches or torque screwdrivers. This is also available without torque for those who cannot fit a torque tool into their budgets.

The Screwty® can also be used to screw on M23 connectors.

The tool does not have to be re-applied. During the follow-up it simply slips back.

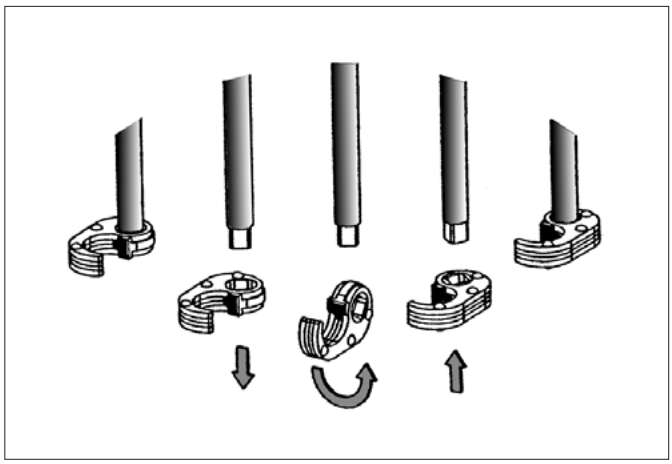

You can change the function from closed to open by simply turning it around.

The Screwty® can also be purchased as a set with other suitable attachments.

Screwty® torque

- Screw-on circular plug, safety sealed
- Easier work

Cutting tools

- Cutting shape for various cable sizes
- Cutting without deformation of the conductor

Sheathing and insulation stripping tools

- No need to adjust cutting depth
- No damage to inner conductors

Stripping and cutting tool

- Special, self adjusting stripping blades do not damage the conductor

Screwty®
Bolting tools

Cutting tools

Sheathing and insulation stripping tools

Stripping and cutting tools

SAI M23 crimping tool

Identification systems

Screwty® for M8/M12/M23

The Torque Screwty®
- Easier work
- Screw on circular plug, safety sealed

The perfect tool for all situations

Screwty® is the ideal, universal tool for tightening and releasing cable glands on all common sensor and actuator cables. The Screwty® can also reach those round plugs normally considered inaccessible! No great force is required, simply turn the tool to tighten or release the plug in connector as required.
The Screwty® also fits the majority (more than 90 %) of the cables and plug-in connectors of other suppliers and is therefore a unique tool that is useful worldwide. The Screwty® consists of a handle with a conventional 1/4" fitting. This means it can be used for all sizes: for M12 and M8 round plugs, and the M12F and M8F types, as well as for plugs and sockets on custom cables.
The Screwty® is suitable for the following round plugs:

Size	M8	M8F	M12	M12F
	10 ±0.3 mm	11.9 ±0.3 mm	14.5 ±0.3 mm	19.8 ±0.3 mm
Thread	M8x1	M8x1	M12x1	M12x1

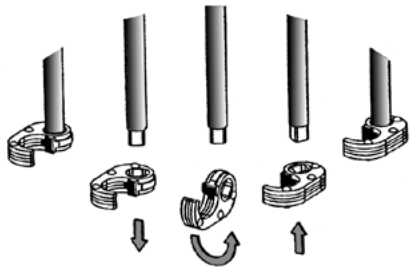

Simply turn the ratchet to tighten or loosen the cable gland.

An adjustable torque fitting is also available for the Screwty®, for guaranteeing extra reliability during installation.
The torque can be infinitely adjusted between 0.5 and 1.7 Nm. This accurate setting enables all round plugs to be tightened precisely with a pre-set torque.

Weidmüller specifies the following torques for its round plugs:

Size	M8	M8F	M12	M12F
Torque	0.5-0.6 Nm	0.5-0.6 Nm	0.8-1.2 Nm	0.8-1.2 Nm
Thread	M8x1	M8x1	M12x1	M12x1

The Screwty® can also be fitted with other blades to create a torque screwdriver. You can find these blades in our catalogue "Tools".

Use of an M12 Screwty®

1. Position Screwty®,
2. tighten connector,
3. finished!

Use of an M23 Screwty®

Screwty® standard

Ordering data

Type	Use	Qty.	Order No.
Screwty® M12	moulded M12 lines	1	1900000000
Screwty® M8	moulded M8 lines	1	1900010000
Screwty® M12 F	M12 plugs for custom assembly	1	1900020000
Screwty® M8 F	M8 plugs for custom assembly	1	1900030000

Screwty® Set

Ordering data

Type		Qty.	Order No.
Screwty® Set		1	1910000000
Fittings			
Type	**Contents**		
Screwty® Set	1x Screwty® standard handle + 1 M12, M8, M12 F, M8 F attachments		

Screwty® attachments

Screwty® M8 attachment | **Screwty® M8 F attachment** | **Screwty® M12 attachment** | **Screwty® M12 F attachment** | **Screwty® M23 attachment**

Ordering data

Type	Qty.	Order No.
Screwty® M12 KO o. SD	1	1900100000
Screwty® M8 KO o. SD	1	1900110000
Screwty® M12F KO o. SD	1	1900120000
Screwty® M8F KO o. SD	1	1900130000
Screwty® M23 LS	1	1981560000

Legend:	
F	for custom assemblies
DM	torque
KO o. SD	ratchet only (attachment)
Screwty®	screwdriver
Screwty® DM	torque screwdriver, interchangeable blade
WK	interchangeable blade
LS	power plug

Screwty® with torque fitting

Setting aid for Screwty® with torque fitting (included)

Ordering data

Type	Use	Qty.	Order No.
Screwty®-M12-DM	moulded M12 lines with torque requirement	1	1900001000
Screwty®-M8-DM	moulded M8 lines with torque requirement	1	1900011000
Screwty®-M12 F-DM	M12 plugs, custom assembly with torque requirement	1	1900021000
Screwty®-M8 F-DM	M8 plugs, custom assembly with torque requirement	1	1900031000

Fittings	
Type	**Contents**
Screwty®-M12-DM	1 interchangeable blade, 1 torque handle, 1 setting aid for Screwty® torque, 1 Screwty® M12 attachment
Screwty®-M8-DM	1 interchangeable blade, 1 torque handle, 1 setting aid for Screwty® torque, 1 Screwty® M18 attachment
Screwty®-M12 F-DM	1 interchangeable blade, 1 torque handle, 1 setting aid for Screwty® torque, 1 Screwty® M12 F attachment
Screwty®-M8 F-DM	1 interchangeable blade, 1 torque handle, 1 setting aid for Screwty® torque, 1 Screwty® M18 F attachment

Screwty® Set-DM

Ordering data

Type		Qty.	Order No.
Screwty® Set-DM		1	1920000000
Fittings			
Type	**Contents**		
Screwty® Set-DM	1 interchangeable blade, 1 torque handle, 1 setting aid for Screwty® torque, 1 each of Screwty® M12, M8, M12 F, M8 F attachments		

Screwty® interchangeable handle/interchangeable bit

Ordering data

Type	Use	Qty.	Order No.
1/4" handle		1	4294820000
WK-1/4" (Screwty®)		1	1862200000

SAI tool boxes

SAI-Screwty® Box

- Stripping of PVC and PUR sensor/actuator cables
- Tightening of M8 and M12 round connectors with adjustable torque setting

Accessories

Article description	Qty.
Stripping tool Stripper 6–16 for plastic-sheathed cables up to 10 mm outside diameter	1
Torque screwdriver DMS manual for 0.5–1.7 Nm	1
Torque screwdriver DMS manual for 2.0–8.0 Nm	1
Screwty® attachment for plug-in connectors* M8	1
Screwty® attachment for plug-in connectors* M8F	1
Screwty® attachment for plug-in connectors* M12	1
Screwty® attachment for plug-in connectors* M12F	1
Carry case	1

*) Screwing attachment for M8/10 mm; M8F/11.9 mm; M12/14.5 mm; M12/19.8 mm;
F...male and female connectors for custom assembly .

Ordering data

Type	Order No.
SAI-SCREWTY BOX	1939180000

SAI-Screwty® Tool Box

- Screwing of M8 and M12 round connectors with adjustable torque setting
- Tightening of slot-head and cross-head screws (PZ and PH)

Accessories

Article description	Qty.
Torque screwdriver DMS manual for 0.5–1.7 Nm	1
Torque screwdriver DMS manual for 2.0–8.0 Nm	1
Inbus 2.5 / 3.0 / 4.0	1
Slot 0.5 x 3.0	1
Slot 0.8 x 4.0	1
Slot 0.6 x 3.5	1
Cross PH0	1
Cross PH1	1
Cross PH1	1
Torx® T8	1
Torx® T10	1
Torx® T20	1
Torx® T25	1
Screwty® attachment for plug-in connectors* M8	1
Screwty® attachment for plug-in connectors* M8F	1
Screwty® attachment for plug-in connectors* M12	1
Screwty® attachment for plug-in connectors* M12F	1
Carry case	1

*) Screwing attachment for M8/10 mm; M8F/11.9 mm; M12/14.5 mm; M12/19.8 mm;
F...male and female connectors for custom assembly .

Ordering data

Type	Order No.
SAI-SCREWTY TOOL BOX	1939170000

Cutting tools

- Cutting formation for different cable sizes increases the quality of the cuts for smaller cross-sections
- Not suitable for steel wires, steel-armoured cables, aluminium alloys and hard-drawn copper conductors!
- Cutting without deformation of the conductor

KT 8

KT 12

max. 8 mm

max. 16 mm²

max. 16 mm²

max. 16 mm²

max. 12 mm

max. 16 mm²

max. 25 mm²

max. 35 mm²

Technical data

Max. cutting performance, copper cable		KT8	KT12
Copper cable - solid, max.	mm²/-	16 / 6	16 / 6
Copper cable - stranded, max.	mm²/-	16 / 6	25 / 3
Copper cable - flexible, max.	mm²/-	16 / 6	35 / 2
Copper cable, max. diameter	mm	8	12
Max. cutting performance, aluminium cable			
Stranded aluminium cable, max (mm²)	mm²/-	16 / 6	25 / 6
Stranded aluminium cable, max. diameter	mm	8	8
Single-core aluminium cable, max.(mm²)	mm²	16	25
Data / telephone / control cable			
Data / telephone / control cable, max. Ø	mm	8	12
Tool data			
Length / Width / Height	mm	165 / 65 / 25	215 / 66 / 28
Weight	g	180	300
Note		Tool closed	Tool closed

Ordering data

Version	Type	Qty.	Order No.	Type	Qty.	Order No.
	KT 8	1	9002650000	KT 12	1	9002660000
Note						

Special sheathing and insulation stripping tools

- Quick and accurate stripping
- No need to adjust cutting depth
- No damage to inner conductors

Stripper 6-16

Stripper 6-16
The Stripper 6-16 insulation stripping tool is for removing the outer sheath of sensor cables. No damage to inner wires can occur because the blades have a specially ground surface. Adjusting the tool to different cross-sections is unnecessary. The visual scale of 15 to 20 mm enables quick and precise stripping of outer insulation.

AM 12

For UTP and STP data cables

- Cutting of UTP and STP data cables and other flexible copper cables with a diameter of up to 4 mm² (~AWG11)
- Stripping of the outer insulation of UTP and STP data cables and other round cables with Ø approx. 0.5 ... 12.5 mm
- No damage to the shielding or conductor due to adjustable stripping blade
- Length end stop for repeated cutting and stripping lengths

K

Technical data

Max. stripping performance		Stripper 6-16	AM 12
Cable model		suitable for PVC and PUR cables	UTP and STP data cables
Conductor diameter	mm		0.5...12.5
Depth of cut			adjustable
Cutting performance			
UTP und STP data cables, max. diameter	mm		8
Copper cable - flexible, max.	mm²		4
Tool data			
Length	mm	165	97
Weight	g	120	36
Note			

Ordering data

Version	Type	Qty.	Order No.	Type	Qty.	Order No.
	STRIPPER 6-16 RED-LINE	1	**9203110000**	AM 12	1	**9030060000**
Note						

Accessories

	Type	Qty.	Order No.	Type	Qty.	Order No.
Note				Sheathing stripper		

Stripping and cutting tools

- For flexible and solid conductors with PVC insulation
- Cable with double insulation in two processing steps without special adjustment
- Automatic opening of clamping jaws after stripping
- No play in self-adjusting cutting unit
- Long-lasting
- No splicing of single conductors
- Optimised ergonomic design
- Stripping length adjustable via end stop
- Adjustable for different insulation thicknesses
- Selectable partial stripping
- Removable handle shells
- Fold-out cutting protection
- Personalised labelling with ESG device markers

stripax®

0.08...10 mm²

- Stripping: PVC-insulated flexible conductors from 0.08...10 mm² (~AWG 28...7)
- Cutting: PVC-insulated flexible conductors from 0.08...10 mm² (~AWG 28...7)
- Processing of multi-conductors, with thin flat ribbon cables and even multiple conductors in one operation
- No damaging of the conductor due to special, self-adjustable stripping blades

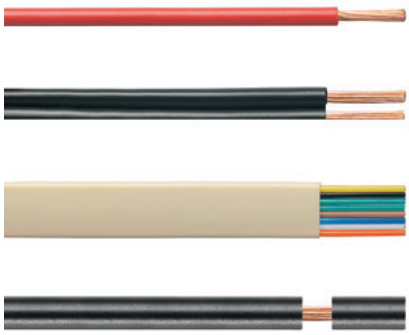

Technical data

Max. stripping performance		STRIPAX® ZERT
Cable type		Flexible and solid conductors with PVC insulation
Wire cross-section, min. / max.Max.	mm²	0.08...10
Stripping length , max.	mm	25
Cutting performance		
Conductor cross-section (cutting capacity)	mm²	6
Tool data		
Length	mm	190
Weight	g	175
Note		

Ordering data

Version	Type	Qty.	Order No.
	STRIPAX	1	9005000000
	STRIPAX ZERT	1	9017330000
Note			

Accessories

	Type	Qty.	Order No.
	Replacement stripping blade	1	1119030000
Note			

multi-stripax®

A multifunctional stripping tool for use on a multitude of conductor insulation forms and configurations – even those not covered by the standard

multi-stripax® the troubleshooter

- Interchangeable stripping units
- Proper stripping of any conductor round, flat or special profiles, thanks to the specially shaped stripping blades
- Incorporates cutting function for up to 2.5 mm^2 solid and 6 mm^2 fine
- Fatigue free operation thanks to ergonomic design
- No damage to conductor or remaining insulation
- Best stripping results for industrial applications
- Stripping results reproduced accurately time and time again
- A long lasting, reliable tool thanks to its robust design
- Plus, the customary Weidmüller repair service

Special stripping units – the answer to diverse stripping tasks

The multi-stripax® tool, distinguished by its robust design, was developed, following customer feedback, to handle all the stripping tasks they have met with in practice.
Thanks to its interchangeable stripping units, a special solution can be found for every challenge you are likely to meet in the marketplace.

The specially shaped stripping blades guarantee perfect stripping results. The guide plates ensure the correct positioning of the wire and therefore prevent damage to the remaining wire. The clamping jaws hold the conductor with just the right force during the stripping operation and are matched to the specific situation at hand. The flexibility of the multi-stripax® to affect the result of the stripping operations depending on the different variables it encounters makes it a universal troubleshooter.

Cutting

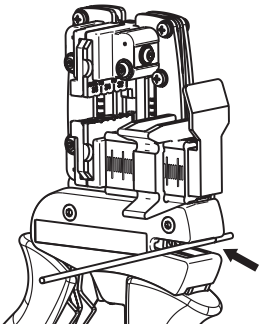

Positioning

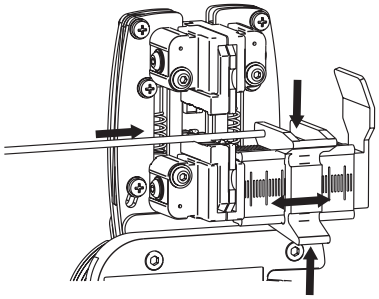

Stripping

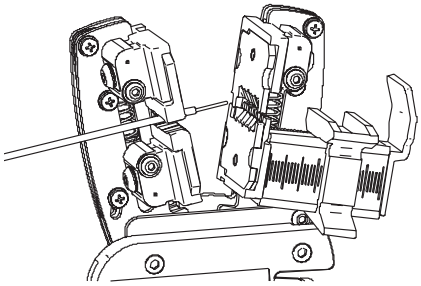

multi-stripax®

Technical data

Cable Typee	PVC, Teflon, PTE, PUR, silicone, halogen-free
Conductor cross-section, min.	2 mm
Conductor cross-section, max.	no limit (in several steps)
max. cutting capacity, fine-strand	6 mm^2
max. cutting capacity, solid	2.5 mm^2
max. cutting capacity, ribbon	10.2 x 4 mm
Length/Width/Height	250 / 85 / 40 mm
Weight	250 g
Note	

multi-stripax® incl. stripping unit

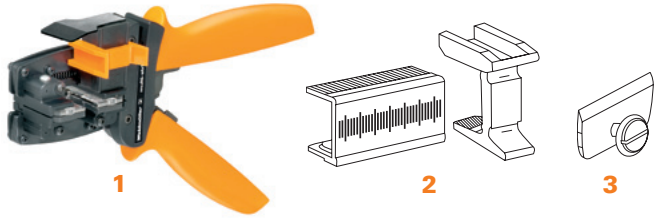

- High quality stripping for industrial applications
- Specially shaped stripping blades enable stripping of special types of insulation and conductor configurations
- Adjustable stop for setting stripping lengths from 2.3 to 30 mm
- Highly flexible thanks to interchangeable stripping units
- Stripping results reproduced accurately time and time again
- No damage to the conductor or insulation
- A long lasting, reliable tool thanks to its robust design
- Integral cutting function for max. 2.5 mm² solid or 6 mm² flexible cables

Ordering data

Illustration	Type	Qty.	Order No.	Features
1	multi-stripax® 6-16	1	9202210000	PVC-insulated cables; Cable cross-section 6 up to 16 mm²; max. stripping lengths depends on cable design / cable type 1. station solid, stranded and flexible 6 mm² 2. station solid, stranded and flexible 10 mm² 3. station solid, stranded and flexible 16 mm² double stranded (flexible) Cutting function up to 6 mm²
1	multi-stripax® ASI	1	9202250000	ASI Bus cables 2 x 1.5 mm² flexible for PTE, PUR and EPDM insulated cables Stripping of outer insulation and inner cable Cutting function up to 6 mm² 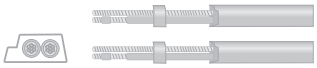
1	multi-stripax® GKW LW	1	9205760000	Railway cable Radox GKW LW; Cable cross-section 1.0; 1.5 and 2.5 mm² max. stripping lengths depends on cable design / cable type Cutting function up to 6 mm²
2	ERAN multi-stripax®	1	9203100000	Length stop
3	ERME multi-stripax®	1	9203070000	Cutting knife
Note				

Stripping units for multi-stripax®

Stripping unit consists of:

Clamping jaws
Short symbol KLBC SPX SP

Insulation stripping tool
Short symbol AIME SPX SP

Guide plate
Short symbol FUEPL SPX SP

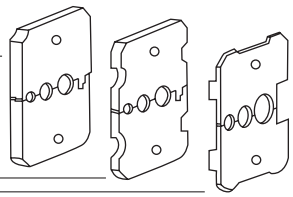

- Highly flexible thanks to interchangeable stripping units
- High quality stripping for industrial applications
- Specially shaped stripping blades enable stripping of special types of insulation and conductor configurations

e = solid
m = stranded
f = finely stranded

Ordering data

Type	Qty.	Order No.	Features
AIE multi-stripax® 6-16	1	9202260000	PVC-insulated cables; Cable cross-section 6 up to 16 mm²; max. stripping lengths depends on cable design / cable type 1. station solid, stranded and flexible 6 mm² 2. station solid, stranded and flexible 10 mm² 3. station solid, stranded and flexible 16 mm² double stranded (flexible) 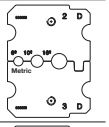
AIE multi-stripax® ASI	1	9202300000	ASI Bus cables 2 x 1.5 mm² flexible for PTE, PUR and EPDM insulated cables Stripping of outer insulation and inner cable 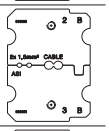
AIE multi-stripax® GKW LW	1	9205770000	Railway cable Radox GKW LW; Cable cross-section 1.0; 1.5 and 2.5 mm² max. stripping lengths depends on cable design / cable type 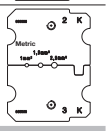

M23 crimping tools

This tool is suitable for M23 signal connectors and power connectors.

SAI M23 crimping tool 1

Technical data

Crimp contact	Wire cross-section (mm²)	Crimping mandrel adjustment	Locator position	Order No.
Crimp male, signal 1 mm	0.14	0.75	11	**1170150000**
	0.25	0.82		
	0.34	0.90		
	0.50	1.00		
	0.75	1.08		
	1.00	1.20		
Crimp female, signal 1 mm (0.08-0.56 mm²)	0.14	0.75	12	**1995860000**
	0.25	0.80		
	0.35	0.87		
	0.50	0.97		
Crimp female, signal 1 mm (0.34-1.00 mm²)	0.50	0.95	12	**1170180000**
	0.75	4.00		
	1.00	1.05		
Crimp male, signal 1.5 mm	0.14	0.75	3	**1170220000**
	0.25	0.82		
	0.35	0.90		
	0.50	0.96		
	0.75	1.03		
	1.00	1.00		
Crimp female, signal 1.5 mm	0.14	0.75	4	**1170230000**
	0.25	0.80		
	0.35	0.87		
	0.50	0.97		
Crimp female, signal 1.5 mm (0.34-1.00 mm²)	0.50	0.95	4	**1170240000**
	0.75	1.00		
	1.00	1.05		
Crimp male, signal 2 mm	0.75	1.30	5	**1170250000**
	1.00	1.40		
	1.50	1.55		
	2.50	1.75		
Crimp female, signal 2 mm	0.75	1.30	6	**1170260000**
	1.00	1.40		
	1.50	1.55		
	2.50	1.75		
Crimp male, power 1 mm	0.14	0.75	1	**1170390000**
	0.25	0.80		
	0.35	0.85		
	0.50	1.03		
	0.75	1.08		
	1.00	1.13		
Crimp female, power 1 mm	0.14	0.75	2	**1995830000**
	0.25	0.80		
	0.35	0.85		
	0.50	0.89		
	0.75	0.95		
	1.00	1.02		
Crimp male, power 2 mm	0.75	1.20	7	**1170400000**
	1.00	1.40		
	1.50	1.55		
	2.50	1.70		
Crimp male, power 2 mm	2.50	1.47	7	**1170410000**
	4.00	1.60		
Crimp female, power 2 mm	0.75	1.20	8	**1995820000**
	1.00	1.40		
	1.50	1.55		
	2.50	1.70		
Crimp female, power 2 mm	2.50	1.47	8	**1170420000**
	4.00	1.60		

Ordering data

Type	Order No.
SAI M23 CRIMPING TOOL 1	**1203840000**

Adjusting the crimping dimensions

The adjustment mechanism is used to set the crimping depth of the crimping mandrel as described below.
The adjusting dial is used to prepare the infeed; the dial can be turned clockwise (for decreasing the dimension) or counter-clockwise (for increasing the dimension).

Adjustment precision

- 1 division mark on the dial v 1/100 mm adjustment
- 1 complete revolution of the dial v 0.2 mm adjustment read from scale
- 5 revolutions of the dial v 1 mm adjustment read from scale

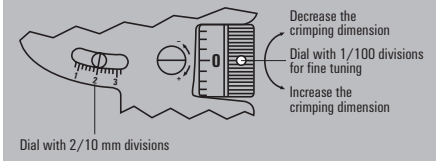

Verifying the crimping dimension

The four-mandrel crimping tool is pre-set at the factory.
The actual crimping size should still be checked periodically.
It should be checked using the plug gauge (Ø 2.0 mm) that is included with the crimping tool as described below. Use the dial on the stationary tool shank to set the size to 2.0 mm on the scale. Set to the zero-point tick mark on the dial and close the tool. (Refer to the diagram showing the crimping size adjustment.) At this setting, it should be possible to move the 2.00-mm-Ø plug gauge without any play or extra room. If this is not possible, then the size deviation (+/-) can be determined using the dial's fine-adjustment mechanism. If this size check reveals that the tool is not within the tolerance range specified by the manufacturer of the contacts, then you should contact the manufacture of the tool for further inspection.

Servicing and maintenance

Before you start to use the hand crimping tool, it must be clean and in proper working condition. Crimp residue or fragments must be removed from the crimping jaws and locator. The joints should be regularly lubricated using machine oil to protect them from dirt. Make sure that all bolts are secured with locking rings.

This tool is only suitable for M23 signal connectors.

Operation mode

The following table specifies the locator positions and the crimping dimensions for various crimping contacts. The contact is inserted through the tool into the locator; this ensures the proper crimping position. The inserted contact is secured by closing gently (approximately to first snap-close level). Now the cable can be easily inserted and it is not possible for the contact to fall out. The tool must be pressed together until it reaches the end stop position in order to function properly. It is then able to open automatically which brings the crimping process to a close in the intended manner.

SAI M23 crimping tool 2

Adjusting the crimping dimensions

The adjustment mechanism is used to set the crimping depth of the crimping mandrel as described below.
The adjusting dial is used to prepare the infeed; the dial can be turned clockwise (for decreasing the dimension) or counter-clockwise (for increasing the dimension).

Adjustment precision

- 1 division mark on the dial v 1/100 mm adjustment
- 1 complete revolution of the dial v 0.2 mm adjustment read from scale
- 5 revolutions of the dial v 1 mm adjustment read from scale

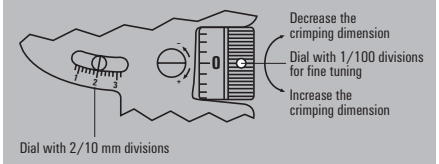

Verifying the crimping dimension

The four-mandrel crimping tool is pre-set at the factory. The actual crimping size should still be checked periodically. It should be checked using the plug gauge (Ø 1.0 mm) that is included with the crimping tool as described below. Use the dial on the stationary tool shank to set the size to 1.0 mm on the scale. Set to the zero-point tick mark on the dial and close the tool. (Refer to the diagram showing the crimping size adjustment.) At this setting, it should be possible to move the 1.00-mm-Ø plug gauge without any play or extra room. If this is not possible, then the size deviation (+/-) can be determined using the dial's fine-adjustment mechanism. If this size check reveals that the tool is not within the tolerance range specified by the manufacturer of the contacts, then you should contact the manufacture of the tool for further inspection.

Servicing and maintenance

Before you start to use the hand crimping tool, it must be clean and in proper working condition. Crimp residue or fragments must be removed from the crimping jaws and locator. The joints should be regularly lubricated using machine oil to protect them from dirt. Make sure that all bolts are secured with locking rings.

Technical data

Crimp contact	Wire cross-section (mm^2)	Crimping mandrel adjustment	Locator position	Order No.
Crimp male 1 mm	0.14	0.86	1	**1170150000**
	0.25	0.90		
	0.34	0.95		
	0.56	0.98		
	0.75	1.03		
	1.00	1.08		
Crimp female 1 mm	0.08	0.75	2	**1995860000**
(0.08-0.56 mm^2)	0.14	0.78		
	0.25	0.82		
	0.34	0.86		
	0.56	0.90		
Crimp female 1 mm	0.34	0.77	2	**1170180000**
(0.34-1.00 mm^2)	0.56	0.82		
	0.75	0.88		
	1.00	0.95		
Crimp male 1.5 mm	0.14	0.65	3	**1170220000**
	0.25	0.68		
	0.34	0.72		
	0.56	0.81		
	0.75	0.95		
	1.00	1.07		
Crimp female 1.5 mm	0.14	0.70		**1170230000**
(0.14-0.75 mm^2)	0.25	0.73		
	0.34	0.77		
	0.56	0.85		
	0.75	1.05		
Crimp female 1.5 mm	0.34	0.88		**1170240000**
(0.34-1.00 mm^2)	0.56	0.95		
	0.75	1.05		
	1.00	1.13		
Crimp male 2.0 mm	0.75	1.20		**1170250000**
	1.00	1.35		
	1.50	1.45		
	2.50	1.60		
Crimp female 2.0 mm	0.75	1.25		**1170260000**
	1.00	1.35		
	1.50	1.45		
	2.50	1.60		

Ordering data

Type	Order No.
SAI M23 CRIMPING TOOL 2	**1203960000**

SlimFix Clip

The SlimFix Clip combines two advantages in one: its unique closure mechanism offers the reliability of a closed marker with the ease of attaching an open marker. The Clip closure mechanism also allows quick, no fuss attachment of the markers after the wires have been installed. SlimFix Clip markers are suitable for wires and cables with external diameters up to 5 mm. Long sequences of characters are possible on the large marking surface – up to 30 mm.

- Halogen-free, flammability class V2 material
- Narrow markers with reliable attachment thanks to compensation feature
- Clip closure mechanism ensures permanent attachment following wire installation
- Rapid attachment without tools
- Three sizes for wire cross-sections from 0.5 – 10.0 mm²
- Available in lengths of 12, 21 and 30 mm
- Markers available in the proven MultiCard format
- Additional marking surface for precise assignment to projects
- Custom-printed markers supplied to your specifications

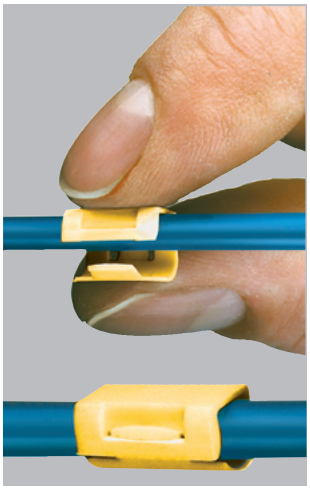

Technical data

Material	Polyamide 66, halogen-free
UL 94 flammability rating	V2
Temperature range	–40 °C to 100 °C
Printing	black

Ordering data

Type	Wire, ext. ø	Wire cross-section
SFC 0	1.5 - 2.5 mm	0.5 - 1.0 mm²
SFC 1	2.0 - 3.5 mm	0.75 - 2.5 mm²
SFC 2	2.5 - 5.0 mm	2.5 - 4.0 mm²
SFC 2.5	4.0 - 6.0 mm	4.0 - 10.0 mm²
SFC 3	3.5 - 7.0 mm	4.0 - 10.0 mm²
Colour	Other colours on request ● brown ● orange ● green ● violet ● grey	
Special printing	Specify special printing and colours per diskette, Excel file or using the M-Print® PRO software.	
Minimum order quantity	1 pack	

Note: SlimFix Clip markers can be printed with PrintJet.

SFC - blank

Technical data

Material	Polyamide
UL 94 flammability rating	V2
Min. temperature, continuous	-40 °C
Max. temperature, continuous	100 °C

Ordering data

Type	Length	Qty.	Order No. white	Order No. yellow	Order No. blue	Order No. red	Custom printing
SFC 0/12	12	200	1813130000	1813160000	1813170000	1813150000	
SFC 1/12	12	200	1747320001	1747320004	1747320002	1747320003	
SFC 2/12	12	120	1758320001	1758320004	1758320002	1758320003	
SFC 2.5/12	12	120	1062000000	1062010000	1062030000	1062020000	1062040000
SFC 3/12	12	80	1025220000	1025230000	1025250000	1025240000	1025550000
SFC 0/21	21	200	1813190000	1813210000	1813220000	1813200000	
SFC 1/21	21	200	1779080001	1779080004	1779080002	1779080003	
SFC 2/21	21	120	1805810000	1805780000	1805770000	1805790000	
SFC 2.5/21	21	120	1062050000	1062070000	1062090000	1062080000	1062110000
SFC 3/21	21	80	1025260000	1025270000	1025300000	1025290000	1025560000
SFC 0/30	30	150	1813240000	1813260000	1813270000	1813250000	
SFC 1/30	30	150	1805760000	1805730000	1805720000	1805740000	
SFC 2/30	30	90	1805870000	1805830000	1805820000	1805850000	
SFC 3/30	30	60	1025310000	1025320000	1025340000	1025330000	1025570000

Marker tags for sensor cables

Sleeves for marking sensor cables

Unique marking and identification of sensor/actuator cables can be achieved with a marker tag. Each cable has a sleeve that accepts a marker tag TM-I 18. Cables open at one end have one sleeve, connecting cables have two marker sleeves. The TM-I 18 is available in various colours.

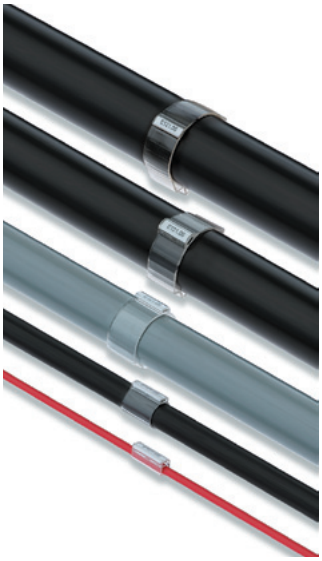

Ordering data

Type	Colour	Order No.
Sleeve		
TM 203/18 VO	transparent	1798480000
TM 4/18 HF/HB	transparent	1719850000
Marker		
TM-I 18 NEUTRAL WS	white	1718431044
TM-I 18 NEUTRAL GE	yellow	1718431687

The Weidmüller PrintJet PRO identification system prints marker tags quickly, reliably and individually.

The **PrintJet PRO** inkjet printer prints markers for electric connectivity. These markers can be used for clear equipment identification on devices, cables and connectors. The labelling makes servicing, maintenance and troubleshooting much easier. Water-based ink is used for the spot colour printing. The print is crystal clear and resistant to environmental influences.

The **PrintJet PRO** prints plastic markers in **MultiCard** format. In combination with the user-friendly **M-Print® PRO** software and the attached loader, the printer becomes an essential part of the production.The inkjet process being used, the subsequent fusing, as well as the printer cartridge and ink have all been specially adapted by Weidmüller for industrial use. The printer has excellent long-term use capabilities, thanks to its integrated loader.

Ordering data — PrintJet PRO

Type		Order No.
PrintJet PRO 115V		1024050000
PrintJet PRO 230V		1001180001
Accessories		
PJ PRO TNTK INK SET COL	Ink tank starter set, colour	1027110000
PJ PRO TNTK INK K	● Ink tank Black	1027040000
PJ PRO TNTK INK C	● Ink tank Cyan	1027050000
PJ PRO TNTK INK M	● Ink tank Magenta	1027060000
PJ PRO TNTK INK Y	● Ink tank Yellow	1027070000
PJ PRO TNAW	Ink collecting tray	1024140000

Marker tags for distributors

Marker tags can be affixed to distributors to ensure unique identification. For marking our standard M12 products, ESG 9/20 tags are used. M8 and M5 distributors can be labelled with WS 10/5 and DEK 5 markers. For labelling metal distributors, self-adhesive ESG 9/17 must be used.

In the case of the SAI Active family, we differentiate between SAI Active Universal and SAI Active Line. For labelling of Active Universal, we offer ESG 8/13.5/43.3 SAI AU. For labelling of Active Line, the ESG 9/6 is used.

All of these markers are available in MultiCard format and can therefore also be printed using our innovative PrintJet PRO marking solutions.

DEK for marking of M8 and M5 distributors

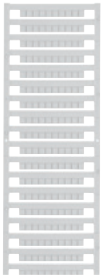

DEK – Blank

Type	Colour	Width/Length	Qty.	Order No.
DEK 5/5 MC	white	5 mm/5 mm	1000	**1609801044**

DEK – Custom printing

Type	Colour	Width/Length	Qty.	Order No.
DEK 5/5 MC	white	5 mm/5 mm	200	**1609810000**

WS for marking of M8 and M5 distributors

WS – Blank

Type	Colour	Width/Length	Qty.	Order No.
WS 10/5 MC	white	5 mm/10 mm	720	**1635000000**
WS 15/5 MC	white	5 mm/15 mm	480	**1609880000**

WS – Custom printing

Type	Colour	Width/Length	Qty.	Order No.
WS 10/5 MC	white	5 mm/10 mm	144	**1635010000**
WS 15/5 MC	white	5 mm/15 mm	96	**1609890000**

ESG for marking of M12 distributors

Ordering data

Type for SAI Active Line	Colour	Width/Length	Qty.	Order No.
ESG 9/20 MC NEUTRAL WS	white	20 mm/9 mm	200	**1609940000**

ESG for marking of M12 Universal distributors

Ordering data

Type for SAI Active Universal	Colour	Width/Length	Qty.	Order No.
ESG 8/13.5/43.3 SAI AU	transparent	13.5 mm/43.3 mm/8 mm	5	**1912130000**

Technical appendix

Technical appendix	Sensor Actuator Interface Passive – Overview	W.2
	Coding systems	W.4
	Sensor Actuator Interface Passive – Connection plan	W.9
	Cable overview	W.10
	Drilling templates	W.12
	Resistence Charts	W.22

Sensor Actuator Interface Passive – Overview

Technical data

Material data		M5	M8	M12
Insulating material – Housing		PA 6 GF	PBT (UL 94 V0)	PBT (UL 94 V0)
– Contact carrier		PA66	PBT (UL 94 V0)	PBT (UL 94 V0)
Base material – Contact		CuSn4	CuSn6	CuSn6
– Screw socket		CuZn, nickel-plated	CuZn, nickel-plated	CuZn, nickel-plated
Temperature range	°C	–25 ...+90	–20...+90	–20...+90
Colour – Housing		grey, RAL 7032	grey, RAL 7032	grey, RAL 7032
– PG & contact carrier			black	black
Cable sheathing		PUR	PUR	PUR
Cable type		PUR/PVC	halogen-free	halogen-free, UL
O-ring		Viton	Viton	Viton
Housing seal				foamed PUR
Type of connection, hood version			tension clamp	screw/tension clamp
Clamping range	mm^2		0.08...1.0	0.08...1.5
AWG No.			28...18	22...14
Stripping length, hood version	mm		100	100
Stripping length, screw version	mm		–	7
Stripping length, tension clamp version	mm		7	10
Contact surface			tin	tin
– BL3.5 / B2L				
Contact base material			Cu alloy	Cu alloy
– BL3.5 / B2L				
Torques				
– Hoods	Nm		0.8	0.8
– Blanking plugs	Nm		0.5	0.5
Mechanical data				
Ingress Protection Class*	IP	67	68 (M16/M23 IP 67)	68
Suitability for cable carrier	cycles at 15d	1 Mio. 15d	1 Mio. 15d	2 Mio. 10d
IDC connection				
Max. connect. frequency of a cable with same cross-section				–
Stripping length	mm			
Conductor cross-section (flexible)	mm^2			–
Smallest strand diameter	mm			–
Conductor insulation material				–
Conductor outside diameter	mm			–
Cable outside diameter	mm			–
Pin assignment				–
Electrical data to VDE 110 (Apr 97)				
Operating voltage	V-	10 ... 30	10 ... 30	10 ... 30
Max. current carrying capacity per I/O signal	A	1	2 (Derating)	2 (Derating)
– total with single supply	A	3	8	10 (9 A for F-version)
– total with dual supply	A	–	–	2 x 8 = 16
Rated voltage	V_{eff}	24	32	32
Test voltage	kV_{eff}		1.0	1.0
Pollution severity			3	3
Insulation resistance	Ω		$> 10^9$	$> 10^9$
Other data				
Dimensions	see chapter G			
Fixing holes	see chapter G			
Function indicators				
– for operating voltage		1 x LED, green	1 x LED, green	2 x LED, green
– for I/O function		1 x LED, yellow (per function)	1 x LED, yellow (per function)	1 x LED, yellow (per function)
Current isolation (SAI-... -M)			–	via 2 jumper plugs
Cable strain relief (SAI-... -M)			M20	M20
Max. cable diameter (SAI-... -M)	mm		10–14	6–12

* only when plugged in and secured

Technical data

Material data		IDC	M12 Push-Pull
Insulating material – Housing		PBT (UL 94 V0)	PA 6 GF
– Contact carrier		PBT (UL 94 V0)	PBT (UL 94 V0)
Base material – Contact		CuZn, pre-nickeled & gold-plated	CuSn6
– Screw socket		CuZn, nickel-plated	CuZn, nickel-plated
Temperature range	°C	–20 ... +90	–25 ... +80
Colour – Housing		grey, RAL 7032	grey, RAL 7032
– PG & contact carrier		black	black
Cable sheathing		PUR	PUR
Cable type		PUR/PVC	halogen-free, UL
O-ring		Viton	Viton
Housing seal		foamed PUR	foamed PUR
Type of connection, hood version		screw/tension clamp	tension clamp
Clamping range	mm^2	0.08 ... 1.5	0.08 ... 1.5
AWG No.		22 ... 14	22 ... 14
Stripping length, hood version	mm	100	100
Stripping length, screw version	mm	7	7
Stripping length, tension clamp version	mm	10	10
Contact surface – BL3.5 / B2L		tin	tin
Contact base material – BL3.5 / B2L		Cu alloy	Cu alloy
Torques			
– Hoods	Nm	0.8	0.8
– Blanking plugs	Nm	0.5	
Mechanical data			
Ingress Protection Class*	IP	67	68
Suitability for cable carrier	cycles at 15d	1 Mio. 15d	2 Mio. 10d
IDC connection			
Max. connect. frequency of a cable with same cross-section		10	
Stripping length	mm	15 ... 20	
Conductor cross-section (flexible)	mm^2	0.25 ... 0.5	
Smallest strand diameter	mm	0.1	
Conductor insulation material		PVC/PE/PUR	
Conductor outside diameter	mm	1.2 ... 1.6	
Cable outside diameter	mm	3.5 ... 5.0	
Pin assignment		see next page	
Electrical data to VDE 110 (Apr 97)			
Operating voltage	V-	10 ... 30	10 ... 30
Max. current carrying capacity per I/O signal	A	2 (Derating)	2
– total with single supply	A	10 (9 A for F-version)	10
– total with dual supply	A	2 x 8 = 16	
Rated voltage	V_{eff}	32	32
Test voltage	kV_{eff}	1.0	1.0
Pollution severity		2	3
Insulation resistance	Ω	$> 10^9$	
Other data			
Dimensions	see chapter G		
Fixing holes	see chapter G		
Function indicators			
– for operating voltage		2 x LED, green	1 x LED, green
– for I/O function		1 x LED, yellow (per function)	1 x LED, yellow (per function)
Current isolation (SAI-... -M)		via 2 jumper plugs	
Cable strain relief (SAI-... -M)		M20	M20
Max. cable diameter (SAI-... -M)	mm	6–12	6–12

* only when plugged in and secured

Contact assignment

SAI-M/SAI-F – IDC

3-pole:

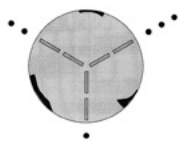

Pole	Colour code	Assignment
1	brown	+ 24 V DC
2	white	input/output
3	blue	0 V DC

4-pole:

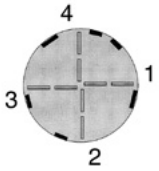

Pole	Colour code	Assignment
1	brown	+ 24 V DC
2	no colour	input/output 2
3	blue	0 V DC
4	black	input/output 1

M23

12-pole:

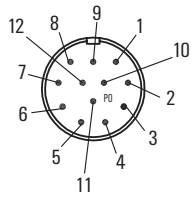

Male

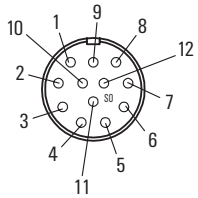

Female

Pole	Colour code	Plug-in station	Contact M12
1	white	1	4
2	green	2	4
3	yellow	3	4
4	grey	4	4
5	pink	5	4
6	red	6	4
7	black	7	4
8	violet	8	4
9	blue (–)	1 – 8	3
10	blue (–)	1 – 8	3
11	brown (+)	1 – 8	1
12	green-yellow (PE)	1 – 8	5

19-pole:

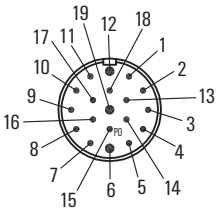

Male

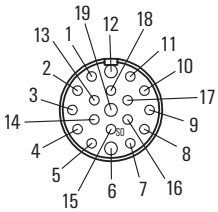

Female

Pole	Colour code	Plug-in station	Contact M12
1	violet	8	4
2	red	6	4
3	grey	4	4
4	red/blue	2	2
5	green	2	4
7	grey/pink	1	2
8	white/green	3	2
9	white/yellow	5	2
10	white/grey	7	2
11	black	7	4
13	yellow/brown	6	2
14	brown/green	4	2
15	white	1	4
16	yellow	3	4
17	pink	5	4
18	grey/brown	8	2
6	blue (–)	1 – 8	3
12	green-yellow (PE)	1 – 8	5
19	brown (+)	1 – 8	1

Coding systems for round connectors

Round connectors are used for wiring sensors, actuators and data cables.
To prevent wiring errors, there are different coding systems: for M12, the plug-in connectors are coded A, B and D. The M12 A-coded plug-in connector is available with 3 to 5 pins, 6 to 8 and 9 to 12 pins. There is no coding for M8 and M5.

The arrangement of the pins in the M8 plug-in connector (asymmetrical) rules out the possibility of 3- and 4-pole M8 plug-in connectors being connected together. In the case of M5 plug-in connectors, 3- and 4-pole plug-in connectors can be connected together since the pins are symmetrically arranged.

A-coded, M12, Sensor wiring

2- to 5-pole:

Pole	Colour code	Assignment
1	brown	+ 24 V DC
2	white	input/output 2*
3	blue	0 V DC
4	black	input/output 1
5	grey	FE
	Housing	shield**
	*) = only 5-pole version	**) = only with shielded version

A-coded, M12, PROFIBUS-PA

2- to 5-pole:

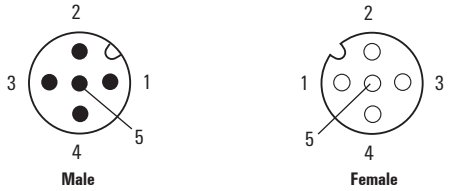

Pole	Colour code	Assignment
1	red	DATA-B
3	green	DATA-A
Housing		shield

A-coded, M12, CANopen/DeviceNet™

2- to 5-pole:

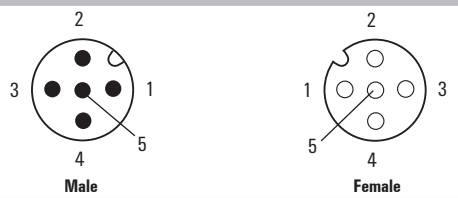

Pole	Colour code	Assignment
1		shield (drain wire)
2	red	V+
3	black	V- (CAN_GND)
4	white	CAN_H signal
5	blue	CAN_L signal

B-coded, M12, PROFIBUS-DP

3- to 5-pole:

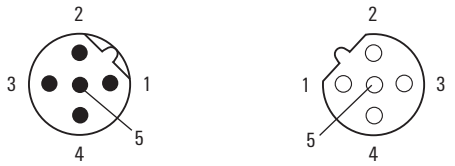

Pin	Colour code	Assignment
2	green	Data A
4	red	Data B
Housing		shield

D-coded, M12, Industrial Ethernet

Industrial Ethernet

4-pole:

Pin	Colour code	Assignment
1	yellow	TD+ (transmit data +)
2	white	RD+ (receive data +)
3	orange	TD - (transmit data -)
4	blue	RD - (receive data -)
Housing		shield

M12

8-pole:

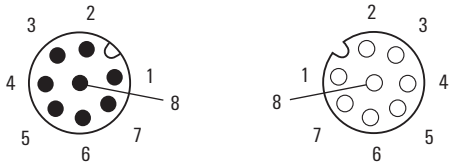

Pole	Colour code	Assignment
1	white	signal
2	brown	signal
3	green	signal
4	yellow	signal
5	grey	+ 24 V DC
6	pink	signal
7	blue	0 V DC
8	red	signal

M12

12-pole:

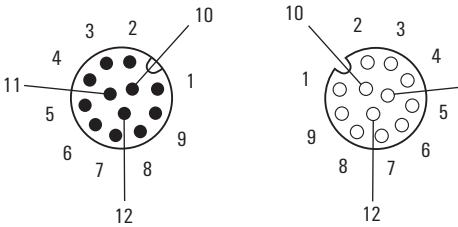

Pole	Colour code	Assignment
1	brown	+ 24 V DC
2	blue	0 V DC
3	white	input/output 1
4	green	input/output 1
5	pink	input/output 1
6	yellow	input/output 1
7	black	input/output 1
8	grey	input/output 1
9	red	input/output 1
10	violet	input/output 1
11	grey/pink	input/output 1
12	red/blue	input/output 1

M8 connector position

3-pole:

Pin	Colour code	Assignment
1	brown	+ 24 V DC
3	blue	0 V DC
4	black	input/output 1

M8 connector position

4-pole:

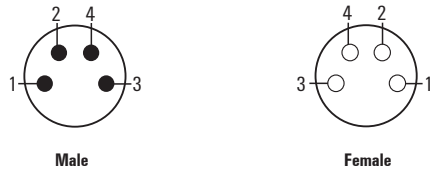

Pin	Colour code	Assignment
1	brown	+ 24 V DC
2	white	input/output 2
3	blue	0 V DC
4	black	input/output 1

M5 connector position

4-pole:

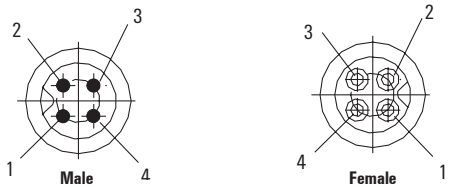

Pin	Colour code	Assignment
1	brown	+ 24 V DC
2	white	input/output 2
3	blue	0 V DC
4	black	input/output 1

M23

12-pole:

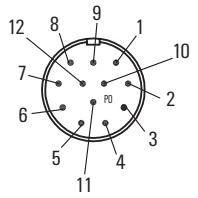

Male

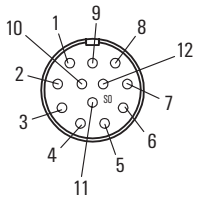

Female

Pole	Colour code	Assignment	Cross-section
1	white	signal	0.34
2	green	signal	0.34
3	yellow	signal	0.34
4	grey	signal	0.34
5	pink	signal	0.34
6	red	signal	0.34
7	black	signal	0.34
8	violet	signal	0.34
9	nc	nc	nc
10	blue	0 V DC	0.75
11	brown	+ 24 V DC	0.75
12	green/yellow	PE	0.75

M23

19-pole:

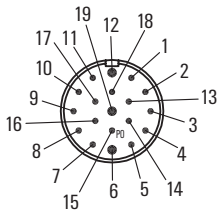

Male

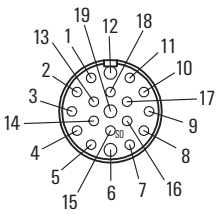

Female

Pole	Colour code	Assignment	Cross-section
1	violet	signal	0.34
2	red	signal	0.34
3	grey	signal	0.34
4	red/blue	signal	0.34
5	green	signal	0.34
6	blue	0 V DC	0.75
7	grey/pink	signal	0.34
8	white/green	signal	0.34
9	white/yellow	signal	0.34
10	white/grey	signal	0.34
11	black	signal	0.34
12	green/yellow	PE	0.75
13	yellow/brown	signal	0.34
14	brown/green	signal	0.34
15	white	signal	0.34
16	yellow	signal	0.34
17	pink	signal	0.34
18	grey/brown	signal	0.34
19	brown	+ 24 V DC	0.75

Sensor Actuator Interface Passive – Connection plan

Connection plan **Conductor colour**

Terminal Connection No.		Connector position	M5/M8-contact 3-pole	M5/M8-contact 4-pole	M12-contact	IDC-contact 3-pole	IDC-contact 4-pole	Potential	Conductor colour	Colour code
1	=	1	4	4	4	2	4	E/A 1-1	white	WH
2	=	2	4	4	4	2	4	E/A 2-1	green	GN
3	=	3	4	4	4	2	4	E/A 3-1	yellow	YE
4	=	4	4	4	4	2	4	E/A 4-1	grey	GY
5	=	5	4	4	4	2	4	E/A 5-1	pink	PK
6	=	6	4	4	4	2	4	E/A 6-1	red	RD
7	=	7	4	4	4	2	4	E/A 7-1	black	BK
8	=	8	4	4	4	2	4	E/A 8-1	violet	VT
9	=	1	–	2	2*		2	E/A 1-2	grey/pink	GYPK
10	=	2	–	2	2*		2	E/A 2-2	red/blue	RDBL
11	=	3	–	2	2*		2	E/A 3-2	white/green	WHGN
12	=	4	–	2	2*		2	E/A 4-2	brown/green	BNGN
13	=	5	–	2	2*		2	E/A 5-2	white/yellow	WHYE
14	=	6	–	2	2*		2	E/A 6-2	yellow/brown	YEBN
15	=	7	–	2	2*		2	E/A 7-2	white/grey	WHGY
16	=	8	–	2	2*		2	E/A 8-2	grey/brown	GYBN
17	=	1, 3, 5, 7	1	1	1	1	1	U1 + (24 V DC)	brown	BN
18	=	1, 3, 5, 7	3	3	3	3	3	U1 - (0 V)	blue	BU
19	=	2, 4, 6, 8	–	–	1	1	1	U2 + (24 V DC)	red*	RD*
20	=	2, 4, 6, 8	–	–	3	3	3	U2 - (0 V)	black*	BK*
21	=	1, 2, 3, 4, 5, 6, 7, 8	–	–	5	–	–	PE	green/yellow	GNYE

* Contact used in 5-pole version only

Plug insert, hood version

Note:
SAI distributors with fixed cable have a single supply conductor as standard. The voltage U1 is supplied to all the sockets. An SAI distributor with fixed cable but with separate supply voltage is available on request.

Tension clamp connection

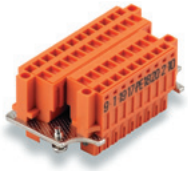

Pin assignment

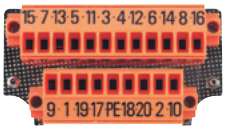

Screw connection

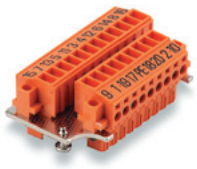

Cable overview

Cables	Identification in article designation	Cable gland	Wire number / cross-section	Colour	Colour coding	Suitable for torsion	Wire core insulation
M8 unshielded							
PVC	V	M8	3x0.25 mm²	black	BR,BL,SW	No	PVC
	V	M8	4x0.25 mm²	black	BR,WS,BL,SW	No	PVC
PUR halogen-free	U	M8	3x0.25 mm²	black	BR,BL,SW	No	TPM
	U	M8	4x0.25 mm²	black	BR,WS,BL,SW	No	TPM
PUR halogen-free yellow	UGE	M8	3x0.25 mm²	yellow	BR,BL,SW	No	TPE
	UGE	M8	4x0.25 mm²	yellow	BR,WS,BL,SW	No	TPE
PUR resistant to welding beads	T	M8	3x0.34 mm²	black	BR,BL,SW	Yes	TPE
	T	M8	4x0.34 mm²	black	BR,WS,BL,SW	Yes	TPE
M8 shielded							
PUR halogen-free	U	M8	3x0.34 mm²	black	BR,BL,SW	No	PP
	U	M8	4x0.34 mm²	black	BR,WS,BL,SW	No	PP
M12 unshielded							
PVC	V	M12	3x0.34 mm²	black	BR,BL,SW	No	PVC
	V	M12	4x0.34 mm²	black	BR,WS,BL,SW	No	PVC
	V	M12	5x0.34 mm²	black	BR,WS,BL,SW,GR	No	PVC
PUR halogen-free	U	M12	3x0.34 mm²	black	BR,BL,SW	No	TPM
	U	M12	4x0.34 mm²	black	BR,WS,BL,SW	No	TPM
	U	M12	5x0.34 mm²	black	BR,WS,BL,SW,GR	No	TPM
	U	M12	8x0.25 mm²	black	BR,WS,BL,GR,GN,GE,RS,RT	No	PP
PUR halogen-free yellow	UGE	M12	3x0.34 mm²	yellow	BR,BL,SW	No	TPE
	UGE	M12	4x0.34 mm²	yellow	BR,WS,BL,SW	No	TPE
	UGE	M12	5x0.34 mm²	yellow	BR,WS,BL,SW,GR	No	TPE
PUR resistant to welding beads	T	M12	3x0.34 mm²	black	BR,BL,SW	Yes	TPE
	T	M12	4x0.34 mm²	black	BR,WS,BL,SW	Yes	TPE
	T	M12	5x0.34 mm²	black	BR,WS,BL,SW,GR	Yes	TPE
M12 shielded							
PUR halogen-free	U	M12	3x0.34 mm²	black	BR,BL,SW	No	TPE
	U	M12	4x0.34 mm²	black	BR,WS,BL,SW	No	TPE
	U	M12	5x0.34 mm²	black	BR,WS,BL,SW,GR	No	TPE
	U	M12	8x0.25 mm²	black	BR,WS,BL,GR,GN,GE,RS,RT	No	PP
Data cables Universal Pro (SubBus)							
PUR halogen-free	U-SB	M8	4x0.34 mm²	black	BR,WS,BL,SW	No	PP
TYPE A	C5AS4VG	M12	4xAWG 22	green	WS,BL,OR,GE	No	PE
TYPE B	C5DS4VG	M12	4xAWG 22	green	WS,BL,OR,GE	No	PE
TYPE C	C5DD4UG	M12/RJ45	4xAWG 22	green	WS,BL,OR,GE	No	PE
EtherCat							
PUR halogen-free	UIE	M8	4x0.15 mm²	green	BL,OR,WSBL,WSOR	No	PP
PROFIBUS DP							
PUR halogen-free	D	M12	2x0.24 mm²	violet	RT, GN	No	TPE
PVC	E	M12	2x0.34 mm²	violet	RT, GN	No	PVC
PROFIBUS PA							
PVC	M	M12	2x1.0 mm²	black	RT, GN	No	PE
PVC	M	M12	2x1.0 mm²	blue	RT, GN	No	PE
CANDeviceNet™							
PUR halogen-free	A	M12	2x0.22 mm² + 2x0.34 mm²	black	WS,BL (0.22 mm²), RT,SW (0.34 mm²)	No	TPE
PVC	B	M12	2x0.22 mm² + 2x0.34 mm²	black	WS,BL (0.22mm²), RT,SW (0.34mm²)	No	PVC
Note	Additional technical data available upon request						

Outer cladding	Suitable for dragline cable carriers	Bending radius in cable ∅		Temperature range in °C		External-Ø in mm	Halogen-free	UL
		Rigid	Moving	Rigid	Moving			
PVC	No	5x	10x	-30 / +80	-5 / +80	approx. 4.5	No	Yes
PVC	No	5x	10x	-30 / +80	-5 / +80	approx. 4.8	No	Yes
PUR	Yes	5x	10x	-40 / +80	-25 / +80	approx. 4.1	Yes	Yes
PUR	Yes	5x	10x	-40 / +80	-25 / +80	approx. 4.4	Yes	Yes
PUR	Yes	5x	10x	-40 / +80	-25 / +80	approx. 4.1	Yes	Yes
PUR	Yes	5x	10x	-40 / +80	-25 / +80	approx. 4.4	Yes	Yes
PUR	Yes	4x	7.5x	-40 / +105	-30 / +105	approx. 4.9	Yes	Yes
PUR	Yes	4x	7.5x	-40 / +105	-30 / +105	approx. 4.9	Yes	Yes
PUR	Yes	5x	12x	-40 / +90	-30 / +90	approx. 4.8	Yes	Yes
PUR	Yes	5x	12x	-40 / +90	-30 / +90	approx. 5.1	Yes	Yes
PVC	nein	5x	10x	-30 / +80	-5 / +80	approx. 4.9	No	Yes
PVC	nein	5x	10x	-30 / +80	-5 / +80	approx. 5.3	No	Yes
PVC	nein	5x	10x	-30 / +80	-5 / +80	approx. 5.7	No	Yes
PUR	Yes	5x	10x	-40 / +80	-25 / +80	approx. 4.3	Yes	Yes
PUR	Yes	5x	10x	-40 / +80	-25 / +80	approx. 4.7	Yes	Yes
PUR	Yes	5x	10x	-40 / +80	-25 / +80	approx. 5.0	Yes	Yes
PUR	Yes	5x	10x	-40 / +90	-30 / +90	approx. 5.9	Yes	Yes
PUR	Yes	5x	10x	-40 / +80	-25 / +80	approx. 4.3	Yes	Yes
PUR	Yes	5x	10x	-40 / +80	-25 / +80	approx. 4.7	Yes	Yes
PUR	Yes	5x	10x	-40 / +80	-25 / +80	approx. 5.0	Yes	Yes
PUR	Yes	4x	7.5x	-40 / +105	-30 / +105	approx. 4.9	Yes	Yes
PUR	Yes	4x	7.5x	-40 / +105	-30 / +105	approx. 4.9	Yes	Yes
PUR	Yes	4x	7.5x	-40 / +105	-30 / +105	approx. 5.1	Yes	Yes
PUR	Yes	5x	10x	-40 / +80	-25 / +80	approx. 5.0	Yes	Yes
PUR	Yes	5x	10x	-40 / +80	-25 / +80	approx. 5.4	Yes	Yes
PUR	Yes	5x	10x	-40 / +80	-25 / +80	approx. 5.7	Yes	Yes
PUR	Yes	5x	12x	-40 / +90	-30 / +90	approx. 6.3	Yes	Yes
PUR	Yes	5x	12x	-40 / +90	-30 / +90	approx. 5.1	Yes	Yes
PVC	No	3.5x	7.5x	-40 / +75	-20 / +60	approx. 6.5	No	Yes
PVC	No	3.5x	7.5x	-40 / +70	-20 / +60	approx. 6.5	No	Yes
PUR	Yes	5x	7.5x	-40 / +70	-20 / +60	approx. 6.5	Yes	Yes
PUR	Yes	4x	7.5x	-40 / +80	-/-	approx. 4.8	Yes	Yes
PUR	Yes	7.5x	15x	-40 / +70	-20 / +60	approx. 7.8	Yes	No
PVC	No	18x	9x	-20 / +70	-5 / +60	approx. 7.8	No	No
PVC	No	-/-	-/-	-30 / +80	-5 / +60	approx. 8.0	No	No
PVC	No	-/-	-/-	-30 / +80	-5 / +60	approx. 8.0	No	No
PUR	Yes	5x	10x	-40 / +80	-10 / +80	approx. 7.0	Yes	Yes
PVC	No	5x	10x	-40 / +80	-10 / +80	approx. 7.2	No	Yes

Drilling templates

SAI M12 and M12 Push-Pull: hood / M23 / M16 / fixed cable / IDC / A

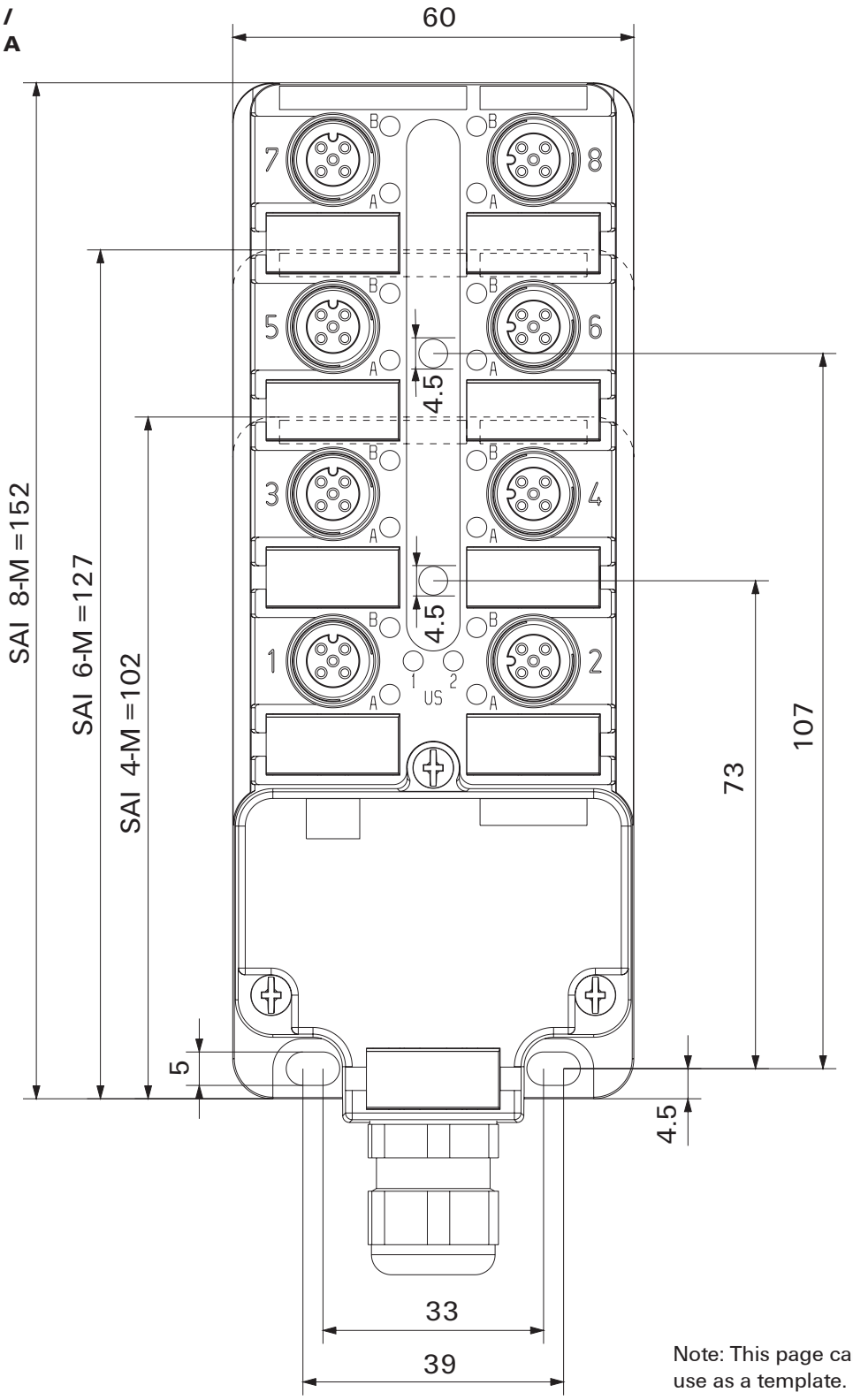

Note: This page can be copied to use as a template.

SAI stainless steel

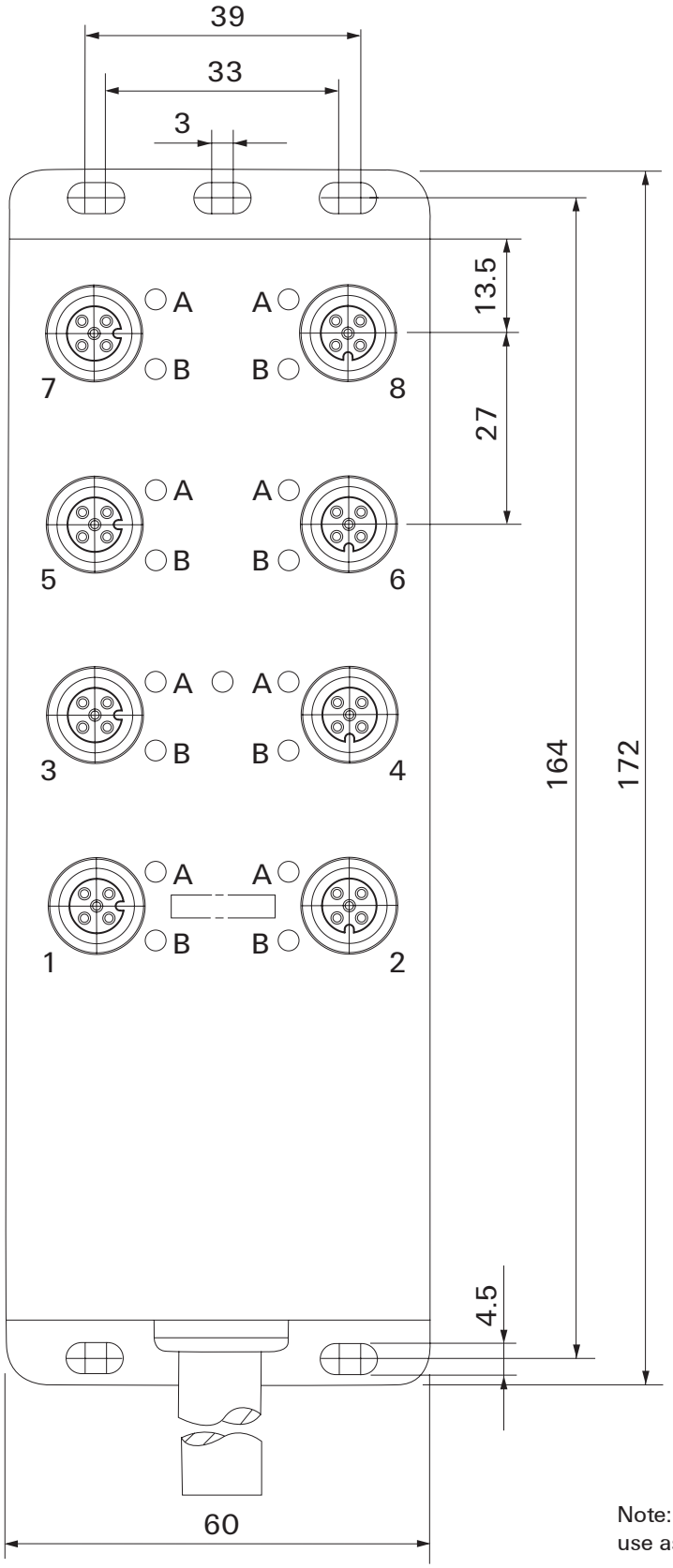

Note: This page can be copied to use as a template.

SAI wall bushing

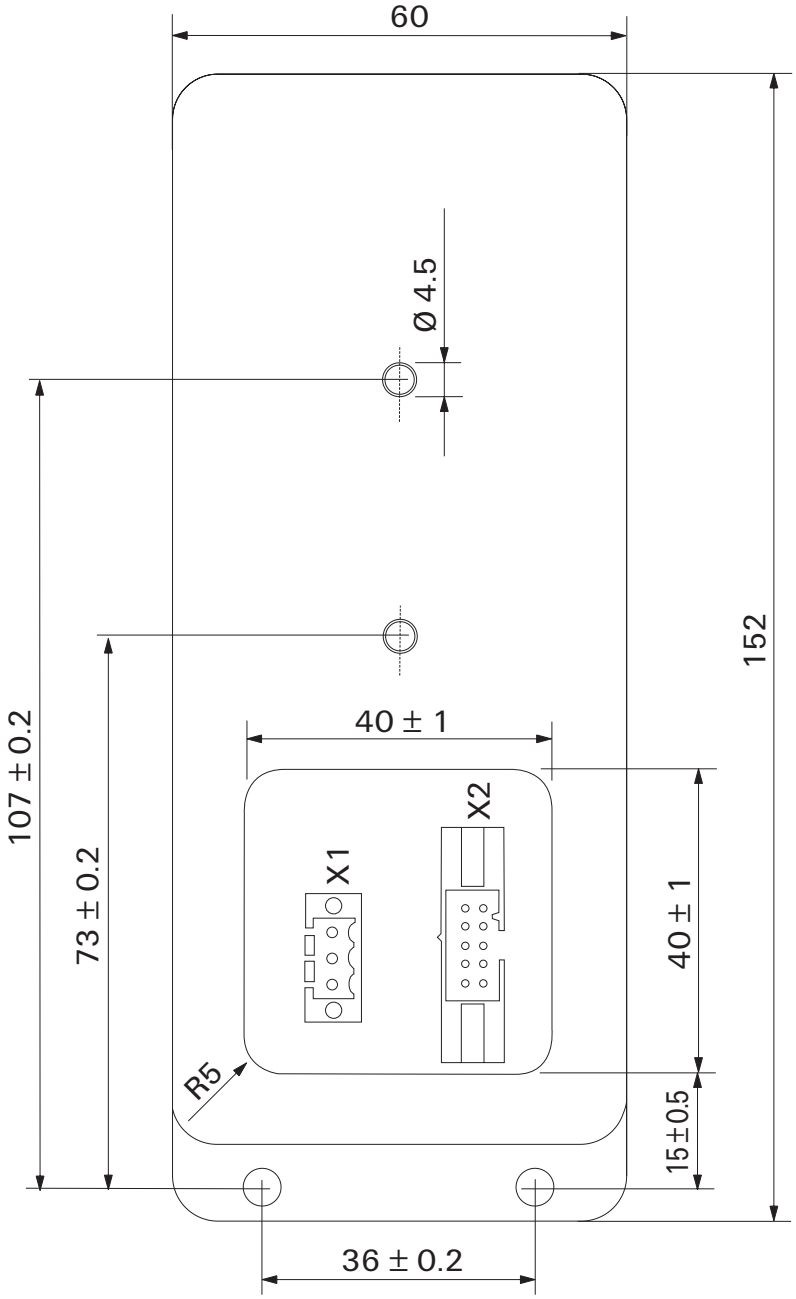

Note: This page can be copied to use as a template.

SAI M8 standard

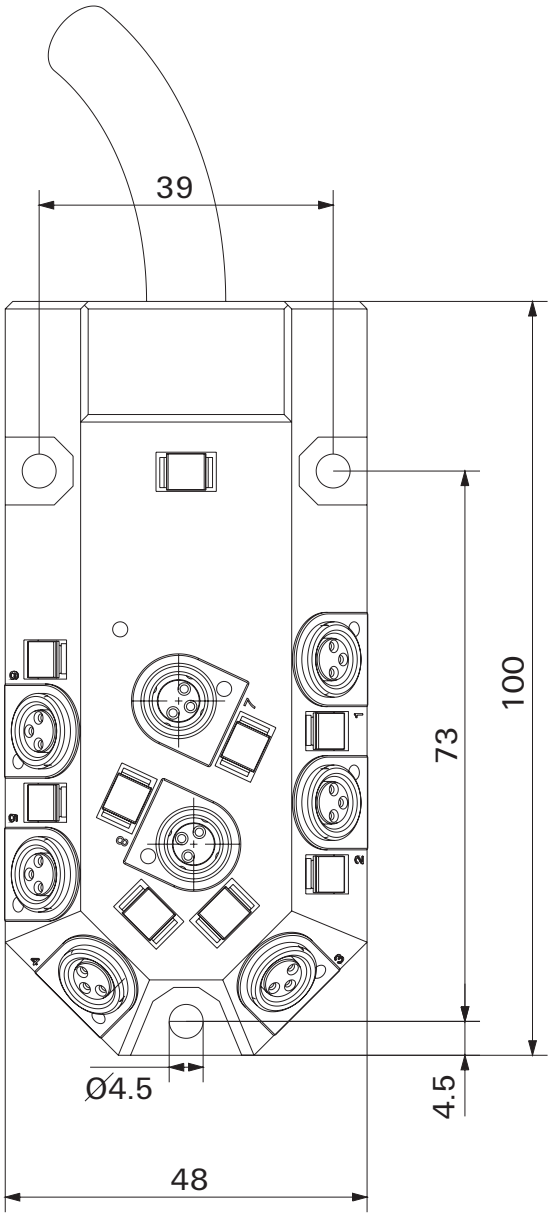

Note: This page can be copied to use as a template.

SAI M8 line

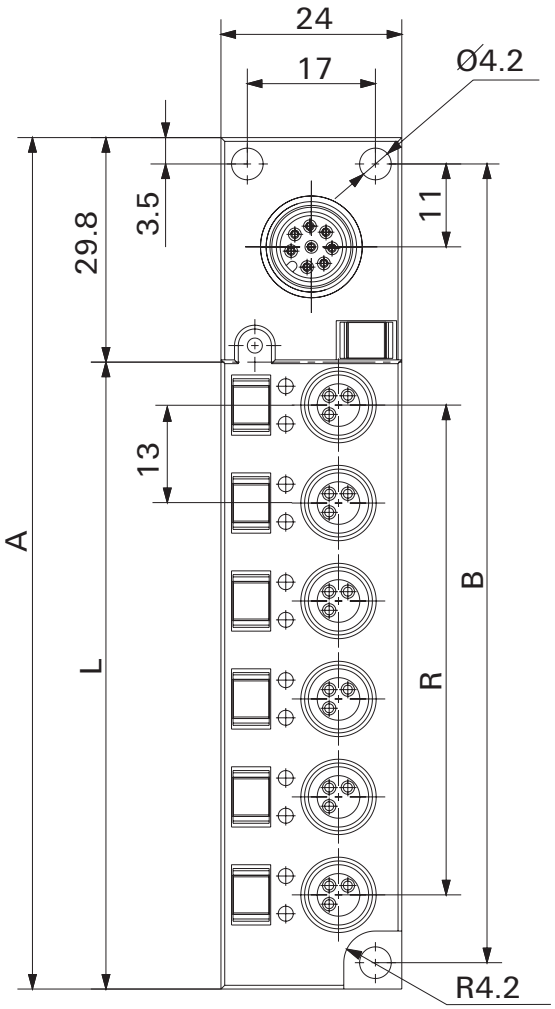

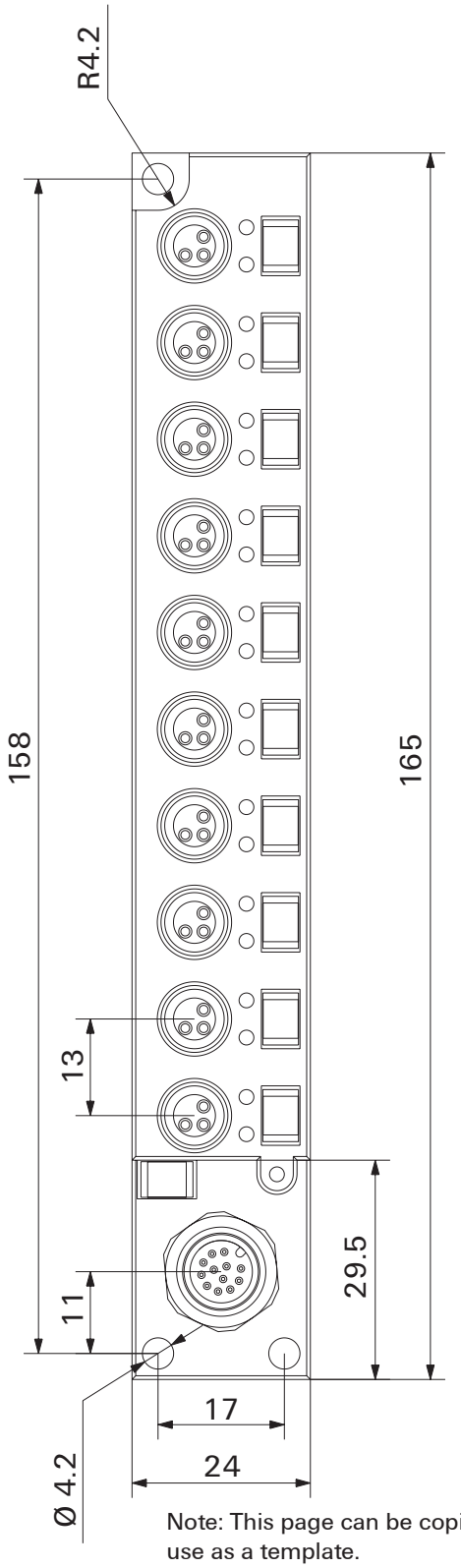

Note: This page can be copied to use as a template.

SAI M5

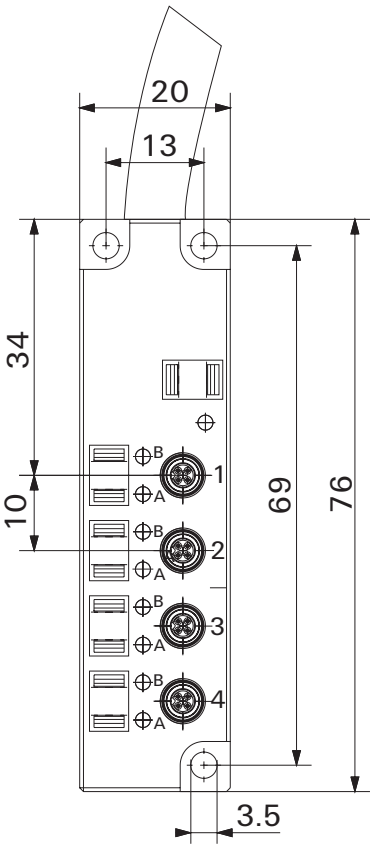

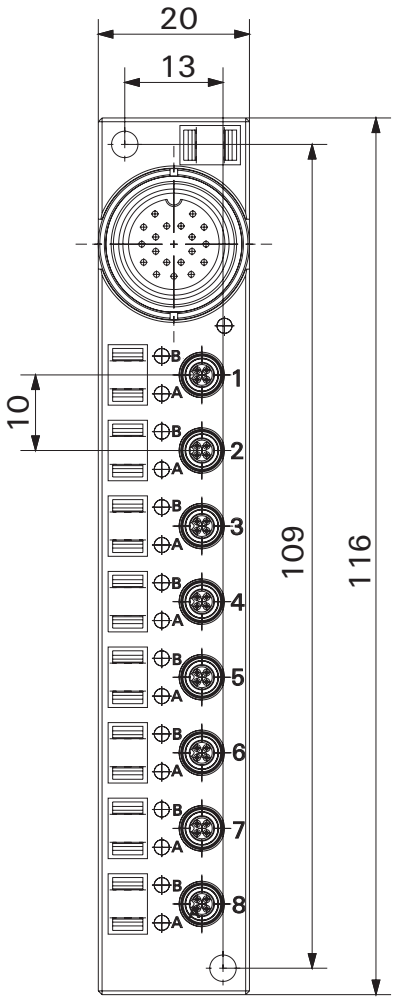

Note: This page can be copied to use as a template.

SAI Active Universal

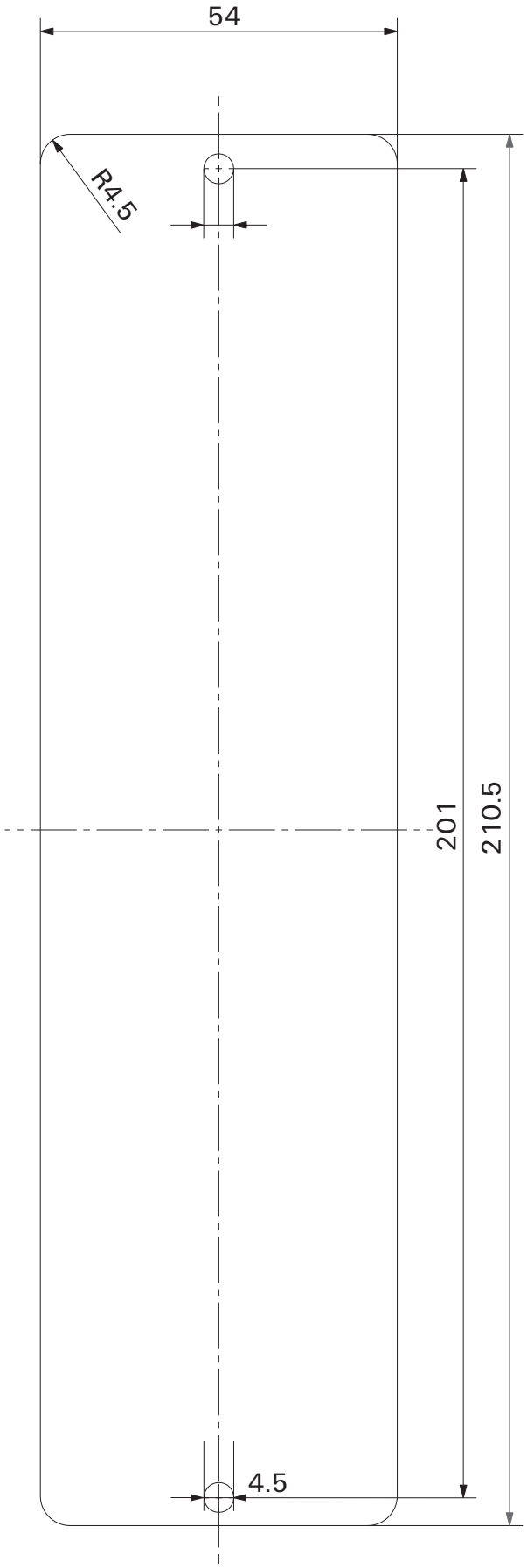

Note: This page can be copied to use as a template.

SAI Active Universal Pro:
Subbus modules with digital outputs

Plan view

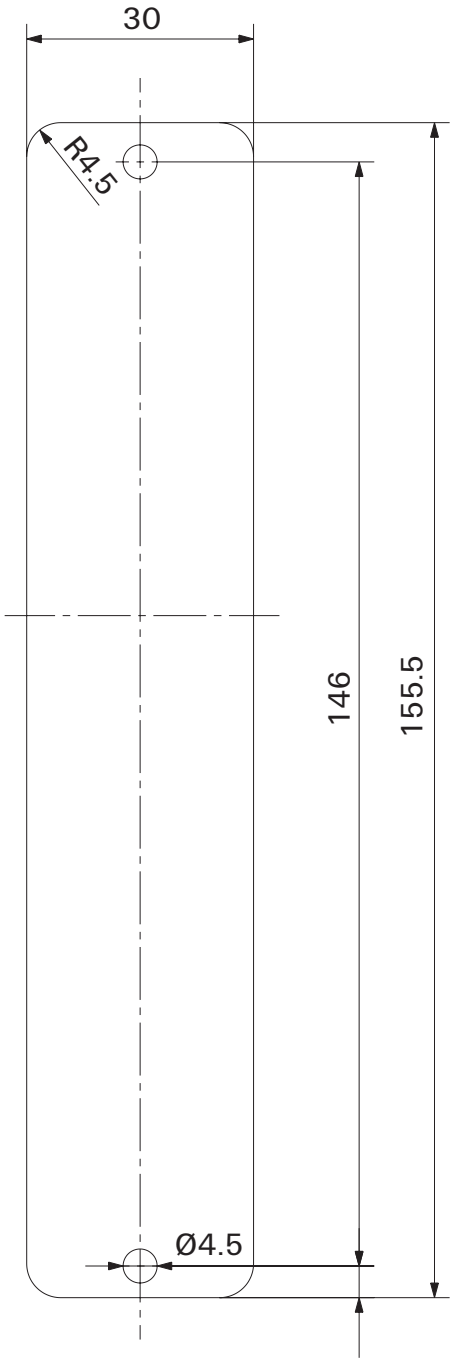

Side view

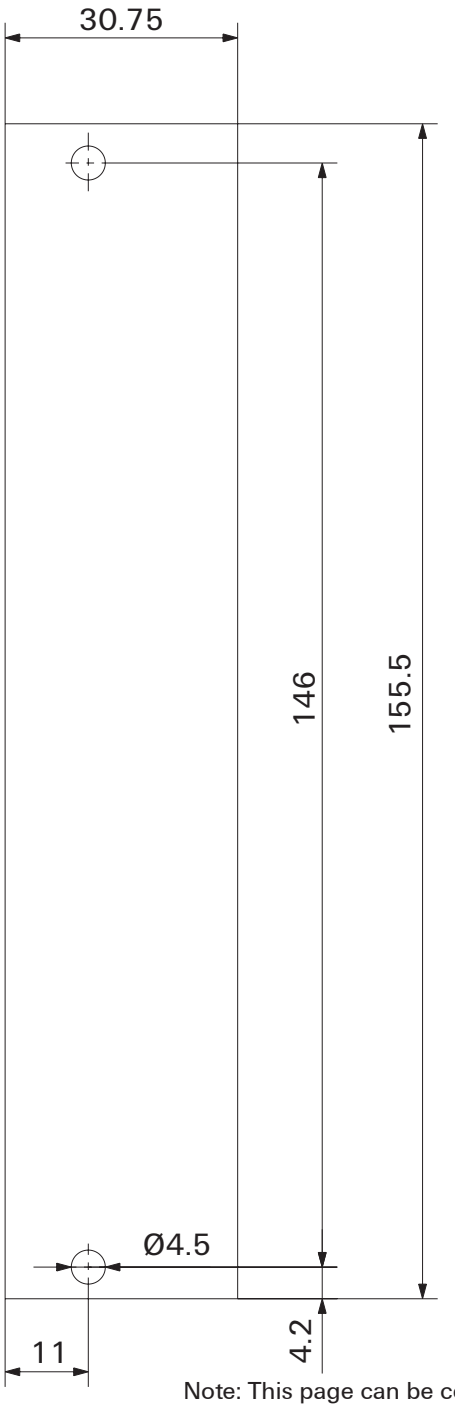

Note: This page can be copied to use as a template.

SAI Active Universal Pro:
Sub-bus modules without digital outputs

Plan view

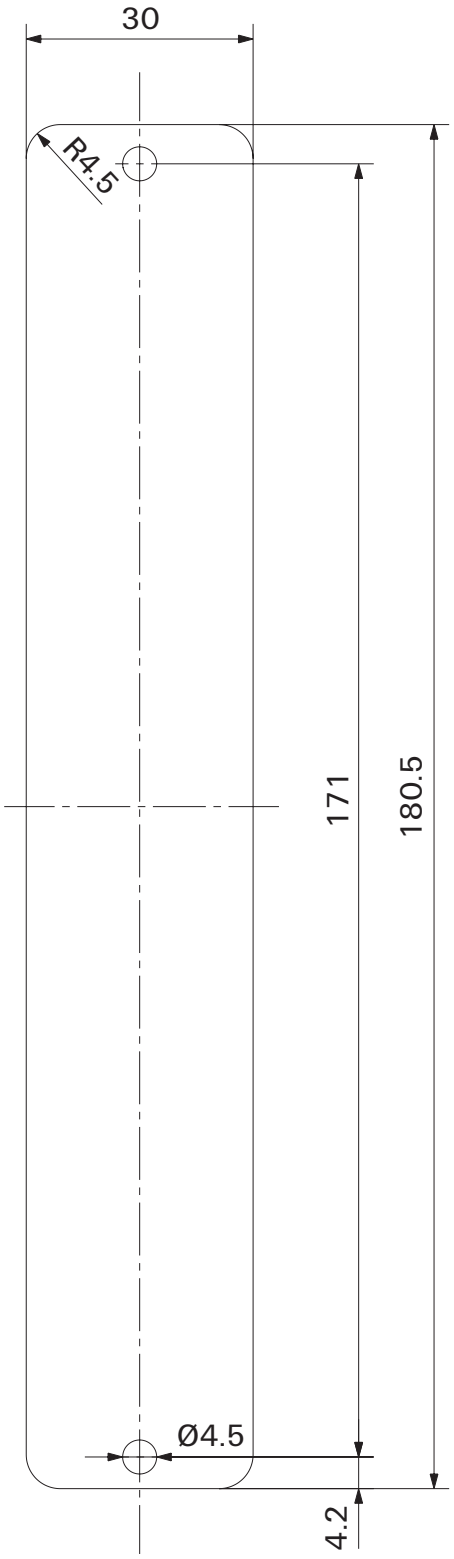

Side view

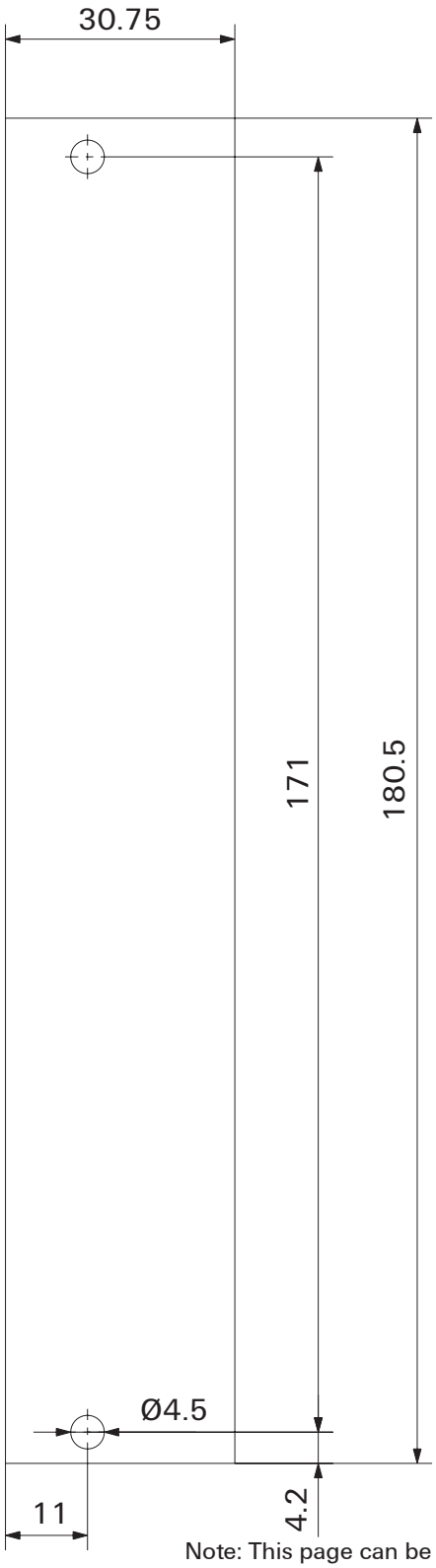

Note: This page can be copied to use as a template.

Chemical resistance of nickel

The statements on the resistance of nickel to chemicals only apply when the coating is undamaged and is not subject to any mechanical loads. These statements are based on a review of the literature available and it should be noted that pure nickel is not considered in the literature – only alloyed nickel steels.

The statements on page W.15 are based on research, and once again please note that pure nickel has not been included in the testing. The findings in the research are based on undamaged alloyed nickel steels that have not been subject to any mechanical loads.

The six materials in question are:

Chlorobenzene	1
Chloroform	1
Chromic acid hydride	1
Acetic acid	1
Hydrofluoric acid	2
Concentrated hydrochloric acid	2

The findings for the two materials above marked with a “2” could have a critical impact on applications. The findings for the four materials marked with a “1” should be taken into account but would not be considered critical for applications.

A further advantage of nickel is its thermal stability. The resistance does not change up to a temperature of 120 °C.

Pure nickel:
Corrosion properties are determined by the resistance of the passive layer.

Good resistance in:
- water containing oxygen
- flowing seawater
- alkalis (very good resistance) even at high temperatures and high concentrations
- neutral and alkaline salt solutions (carbonates, phosphates, sulphates, chlorides and nitrates) even at high concentrations and temperatures

Known problems:
- corrosion attack in heavily oxidising acids and solutions containing chlorides
- in inorganic and organic acids only resistant in diluted solutions and at low temperatures
- coating is not toxic (formation of deposits by micro-organisms can lead to destruction of the passive coating)

Chemical resistance of Pocan® (PBT)

Pocan® offers good resistance to chemicals. Organic solvents, such as aliphatic hydrocarbons, alcohols, ether, long-chain ester as well as fats, oils and perchlorinated hydrocarbons do not corrode Pocan®.

This is also true for water and aqueous solutions, neutral and acid salts, as well as diluted acids.

On the other hand, it is susceptible to alkalis, oxidising acids, ketones and phenols.

Susceptibility to universal alcohols, aromatics and ketones increases as the ambient temperature rises above 60 °C.

In the presence of water and aqueous solutions, hydrolytic degradation at higher temperatures increasingly leads to a decline in stability.

Substances like motor and transformer oils, petrol and brake fluids do not corrode Pocan®, even at higher temperatures.

Medium	23 °C	60 °C
Acetic acid 10%	±	±
Acetone	+	-
Ammonia 10%	+	-
Ammonia, concentrated	±	-
Benzene	+	-
Brake fluid	+	+
Butane	+	+
Butanol	+	±
Butyl acetate	+	+
Calcium chloride 10%	+	+
Carbon disulphide	+	±
Carbon tetrachloride	+	±
Chlorobenzene	-	-
Chloroform	-	-
Chromic acid hydride 10%	+	+
Citric acid 10%	+	±
Cresol	-	-
Curd soap	+	+
Dibutyl phthalate	+	±
Diesel oil	+	+
Diethyl ether	+	±
Dioxan	+	-
Ethanol	+	+
Ethyl acetate	±	-
Ethyl dichloride	-	-
Ethylene glycol	+	±
Formic acid 10%	+	±
Freon 11	+	+
Frigen 113	+	+
Glacial acetic acid 10%	-	-
Glycerine	+	+
Heptane	+	+
Hexane	+	+
Hydraulic oil	+	+
Hydrochloric acid 10%	+	-
Hydrochloric acid, concentrated	-	-
Hydrofluoric acid 10%	+	+
Hydrogen peroxide 20%	+	±
Isopropyl alcohol	+	±
Kerosene	+	+

Medium	23 °C	60 °C
Linseed oil	+	+
Lubricating greases	+	+
Methanol	+	±
Methyl ethyl ketone	+	±
Methylene chloride	-	-
Mineral oils	+	+
Motor oils	+	+
Nitric acid 10%	+	±
Nitric acid, concentrated	-	-
Octane	+	+
Olive oil	+	+
Paraffin oil	+	+
Perchloroethylene	±	-
Petrol, normal and lead-free	+	+
Petrol, super	+	+
Petrol/methanol 85/15	+	+
Petroleum	+	+
Phenol 10%	-	-
Phosphoric acid 20%	+	±
Potassium chloride 10%	+	+
Potassium dichromate 10%	+	+
Potassium hydroxide 10%	-	-
Potassium permanganate 10%	+	±
Soap suds 10%	+	±
Sodium bisulphite 10%	+	+
Sodium carbonate 10%	+	+
Sodium chloride 10%	+	+
Sodium hydroxide 10%	-	-
Sulphuric acid 10%	+	±
Sulphuric acid, concentrated	-	-
Tetrahydrofuran	-	-
Toluene	±	-
Transformer oil	+	+
Trichlorethene/chloroform 1/1	±	-
Turpentine oil	+	+
Vegetable oils	+	+
Washing liquid	+	+
Washing powder, synthetic	+	+
Water	+	+
Xylol	±	-

The above values are for guidance only. A definite statement can only be made when based on the respective case in question.

+ = resistant
- = not resistant
± = partly resistant

Index

Index	Index Type	X.2
	Index Order No.	X.8
	Addresses worldwide	X.16

Type	Order No.	Page
1-9		
1/4" Handgriff	4294820000	K.5
A		
AIE multi-stripax 6-16	9202260000	K.11
AIE multi-stripax ASI	9202300000	K.11
AIE multi-stripax GKWLW	9205770000	K.11
AM 12	9030060000	C.69
AM 12	9030060000	C.70
AM 12	9030060000	C.73
AM 12	9030060000	C.74
AM 12	9030060000	K.8
AS-KG-GE	9455110000	C.60
AS-KG-SW	9455120000	C.60
B		
B KOTR B M12 4POL D BU	2350590000	G.13
B KOTR B M12 4POL D BU	2350590000	G.7
B KOTR B M12 5POL A BU	2350600000	G.13
B KOTR B M12 5POL A BU	2350600000	G.7
B KOTR B M12 5POL A SF	2350610000	G.10
B KOTR B M12 5POL A SF	2350610000	G.13
B KOTR B M12 5POL A SF	2350610000	G.7
B KOTR B M12 5POL B BU	2350620000	G.13
B KOTR B M12 5POL B BU	2350620000	G.7
B KOTR B M12 5POL B SF	2350630000	G.13
B KOTR B M12 5POL B SF	2350630000	G.7
B KOTR BUS M8 4POL BU	2350640000	G.10
B KOTR BUS M8 4POL BU	2350640000	G.13
B KOTR BUS M8 4POL BU	2350640000	G.7
B KOTR BUS M8 4POL BU	2350640000	G.9
B KOTR BUS M8 4POL SF	2350650000	G.10
B KOTR BUS M8 4POL SF	2350650000	G.13
B KOTR BUS M8 4POL SF	2350650000	G.9
B KOTR M12 4P D BU SAI	2341480000	G.10
B KOTR M12 4P D BU SAI	2341480000	G.13
B KOTR M12 4P D BU SAI	2341480000	G.6
B KOTR M12 4P D BU SAI	2341480000	G.9
B KOTR M12 5P A BU SAI	2326170000	G.10
B KOTR M12 5P A BU SAI	2326170000	G.13
B KOTR M12 5P A BU SAI	2326170000	G.6
B KOTR M12 5P A BU SAI	2326170000	G.9
B KOTR M8 3P BU SAI	2332380000	G.13
B KOTR M8 3P BU SAI	2332380000	G.7
BL 3.50/07/180 SN DKGN BX	1606530000	I.43
D		
DAE M12 PA short	1868560000	C.81
DEK 5/5 MC BEDRUCKT	1609810000	K.16
DEK 5/5 MC-10 NEUT. WS	1609801044	K.16
E		
ERAN MULTI-STRIPAX	9203100000	K.11
ERME 10² SPX 4	1119030000	K.9
ERME MULTI-STRIPAX	9203070000	K.11
ESG 8/13.5/43.3 SAI AU	1912130000	F.10
ESG 8/13.5/43.3 SAI AU	1912130000	F.14
ESG 8/13.5/43.3 SAI AU	1912130000	F.18
ESG 8/13.5/43.3 SAI AU	1912130000	F.23
ESG 8/13.5/43.3 SAI AU	1912130000	F.25
ESG 8/13.5/43.3 SAI AU	1912130000	F.27
ESG 8/13.5/43.3 SAI AU	1912130000	F.37
ESG 8/13.5/43.3 SAI AU	1912130000	K.16
ESG 9/20 MC NEUTRAL WS	1609940000	K.16
F		
FBC PA M12 FM 1M	1785110100	C.28
FBC PA M12 FMA 1M	1076530100	C.28
FBC PA M12 M 1M	1785120100	C.28
FBC PA M12 M-FM 1M	1785100100	C.29
FBC PA M12 M-FMA 1M	1075620100	C.29
FBC PA M12 MA 1M	1076540100	C.28
FBC PA M12 MA-FM 1M	1075460100	C.29
FBC PA M12 MA-FMA 1M	1076550100	C.29
FBCEX PA M12 FM 1M	1785140100	C.28
FBCEX PA M12 FMA 1M	1076520100	C.28
FBCEX PA M12 M 1M	1785150100	C.28
FBCEX PA M12 M-FM 1M	1785130100	C.29
FBCEX PA M12 M-FMA 1M	1075390100	C.29
FBCEX PA M12 MA 1M	1076580100	C.28
FBCEX PA M12 MA-FM 1M	1075450100	C.29
FBCEX PA M12 MA-FMA 1M	1075410100	C.29
FBCon DP CG 1way	8564340000	C.23
FBCon DP CG Term 24V	8564290000	C.24
FBCon DP M12 1way	8564350000	C.23
FBCon DP M12 Term 24V	8564330000	C.24
FBCon M12 4P FM EMC	8426220000	C.32
FBCon M12 4P FM EMC	8426220000	D.15
FBCon M12 4P FM EMC	8426220000	D.5
FBCon M12 4P M EMC	9455640000	C.32
FBCon M12 4P M EMC	9455640000	D.15
FBCon M12 4P M EMC	9455640000	D.5
FBCon PA CG 1way	8564090000	C.36
FBCon PA CG 1way Ex	8564180000	C.52
FBCon PA CG 1way Limiter	8714200000	C.45
FBCon PA CG 1way OVP	8714120000	C.41
FBCon PA CG 2way	8564100000	C.37
FBCon PA CG 2way Ex	8564190000	C.53
FBCon PA CG 2way Limiter	8714210000	C.46
FBCon PA CG 2way OVP	8714130000	C.42
FBCon PA CG 4way	8564110000	C.38
FBCon PA CG 4way Ex	8564200000	C.54
FBCon PA CG 4way Limiter	8714220000	C.47
FBCon PA CG 4way OVP	8714140000	C.43
FBCon PA CG 8way	8564300000	C.39
FBCon PA CG 8way Ex	8564240000	C.55
FBCon PA CG 8way Limiter	8714230000	C.48
FBCon PA CG 8way OVP	8714150000	C.44
FBCon PA CG/M12 1way	8564060000	C.36
FBCon PA CG/M12 1way Ex	8564150000	C.52
FBCon PA CG/M12 1way Limiter	8714160000	C.45
FBCon PA CG/M12 1way OVP	8714080000	C.41
FBCon PA CG/M12 2way	8564070000	C.37
FBCon PA CG/M12 2way Ex	8564160000	C.53
FBCon PA CG/M12 2way Limiter	8714170000	C.46
FBCon PA CG/M12 2way OVP	8714090000	C.42
FBCon PA CG/M12 4way	8564080000	C.38
FBCon PA CG/M12 4way Ex	8564170000	C.54
FBCon PA CG/M12 4way Limiter	8714180000	C.47
FBCon PA CG/M12 4way OVP	8714100000	C.43
FBCon PA CG/M12 8way	8564310000	C.39
FBCon PA CG/M12 8way Ex	8564250000	C.55
FBCon PA CG/M12 8way Limiter	8714190000	C.48
FBCon PA CG/M12 8way OVP	8714110000	C.44
FBCon SS CG 1way	8703430000	C.36
FBCon SS CG 4way	8703450000	C.38
FBCon SS CG 8way	8703470000	C.39
FBCon SS CG/M12 1way	8726020000	C.36
FBCon SS CG/M12 4way	8726040000	C.38
FBCon SS CG/M12 8way	8726050000	C.39
FBCon SS DP M12 1way	8714270000	C.23
FBCon SS DP M12 Term 24V	8714250000	C.24
FBCon SS DP PCG 1way	8714260000	C.23
FBCon SS DP PCG Term 24V	8714240000	C.24
FBCon SS PCG 1way	8613670000	C.36
FBCon SS PCG 1way Limiter	8726110000	C.45
FBCon SS PCG 1way OVP	8715270000	C.41
FBCon SS PCG 4way	8613680000	C.38
FBCon SS PCG 4way Limiter	8715260000	C.47
FBCon SS PCG 4way OVP	8726080000	C.43
FBCon SS PCG 8way	8640720000	C.39
FBCon SS PCG 8way Limiter	8726160000	C.48
FBCon SS PCG 8way OVP	8726090000	C.44
FBCon Term.D Ex	8606190000	C.56
FBCon Term.D Ex FM	8556460000	C.56
FBCon Term.D Ex FM/PEAN	8606180000	C.56
FBCon Term.D Ex PEAN	8606200000	C.56
G		
GWDR M16-NP	1736230000	C.81
GWHUE BUS M12 BU SAI	4322750000	G.7
GWHUE BUS M12 SF SAI	4322760000	G.7
I		
IE-C5DB4RE0015MCAMCA-E	1059970015	C.75
IE-C5DB4RE0015MCAXXX-X	1059900015	C.76
IE-C5DB4RE0015MCSMCA-E	1059940015	C.75
IE-C5DB4RE0015MCSMCS-E	1010850015	C.73
IE-C5DB4RE0030MCAMCA-E	1059970030	C.75
IE-C5DB4RE0030MCAXXX-X	1059900030	C.76
IE-C5DB4RE0030MCSMCA-E	1059940030	C.75
IE-C5DB4RE0030MCSMCS-E	1010850030	C.73
IE-C5DB4RE0050MCAMCA-E	1059970050	C.75
IE-C5DB4RE0050MCAXXX-X	1059900050	C.76
IE-C5DB4RE0050MCSMCA-E	1059940050	C.75
IE-C5DB4RE0050MCSMCS-E	1010850050	C.73
IE-C5DB4RE0050MSSMCS-E	1059340050	C.73
IE-C5DB4RE0100MCAMCA-E	1059970100	C.75
IE-C5DB4RE0100MCAXXX-X	1059900100	C.76
IE-C5DB4RE0100MCSMCA-E	1059940100	C.75
IE-C5DB4RE0100MCSMCS-E	1010850100	C.73
IE-C5DB4RE0100MCSXXX-X	1010840100	C.74
IE-C5DB4RE0100MSSMCS-E	1059340100	C.73
IE-C5DD4UG0005MCSMCS-E	1025950005	C.69
IE-C5DD4UG0010MCSA20-E	1044470010	C.70
IE-C5DD4UG0015MCAMCA-E	1059890015	C.71
IE-C5DD4UG0015MCAXXX-X	1059750015	C.72
IE-C5DD4UG0015MCSA20-E	1044470015	C.70
IE-C5DD4UG0015MCSMCA-E	1059770015	C.71
IE-C5DD4UG0015MCSMCS-E	1025950015	C.69
IE-C5DD4UG0015MCSXXX-X	1025940015	C.70
IE-C5DD4UG0030MCAMCA-E	1059890030	C.71
IE-C5DD4UG0030MCAXXX-X	1059750030	C.72
IE-C5DD4UG0030MCSA20-E	1044470030	C.70
IE-C5DD4UG0030MCSMCA-E	1059770030	C.71
IE-C5DD4UG0030MCSMCS-E	1025950030	C.69
IE-C5DD4UG0030MCSXXX-X	1025940030	C.70
IE-C5DD4UG0050MCAMCA-E	1059890050	C.71
IE-C5DD4UG0050MCAXXX-X	1059750050	C.72
IE-C5DD4UG0050MCSA20-E	1044470050	C.70
IE-C5DD4UG0050MCSMCA-E	1059770050	C.71
IE-C5DD4UG0050MCSMCS-E	1025950050	C.69
IE-C5DD4UG0050MCSXXX-X	1025940050	C.70
IE-C5DD4UG0100MCAMCA-E	1059890100	C.71
IE-C5DD4UG0100MCAXXX-X	1059750100	C.72
IE-C5DD4UG0100MCSA20-E	1044470100	C.70
IE-C5DD4UG0100MCSMCA-E	1059770100	C.71
IE-C5DD4UG0100MCSMCS-E	1025950100	C.69
IE-C5DD4UG0100MCSXXX-X	1025940100	C.70
IE-CST	9204350000	C.69
IE-CST	9204350000	C.70
IE-CST	9204350000	C.73
IE-CST	9204350000	C.74
IE-PCB-M12X-S-180	1324010000	C.79
IE-PCB2-M12X-S-180	1393080000	C.79
IE-PS-M12X-P-FH	1324020000	C.79
J		
JP CLIP M	8778490000	H.7
JP TEST	8794120000	H.6
JPP NPN PNP 24VDC	8852350000	H.5
JPP PNP NPN 24VDC	8857030000	H.5
JPR 24VDC 1CO M12	8771420000	H.3
JPR 24VDC ISO 1CO M12	8771430000	H.3
JPTA 50MS 24VDC PNP M12	8771440000	H.4
JPTA100MS 24VDC PNP M12	8836630000	H.4
K		
KT 12	9002660000	K.7
KT 8	9002650000	K.7
M		
multi-stripax 6-16	9202210000	K.11
multi-stripax ASI	9202250000	K.11
multi-stripax GKW LW	9205760000	K.11
P		
PB SUB-D IDC TERM PS	1919680000	C.15
PB SUB-D ZF TERM PS	1934200000	C.15
PB-DP SUB-D	8395500000	C.14
PB-DP SUB-D M12 TERM	1140650000	C.16
PB-DP SUB-D M12 TERM PS	1140640000	C.17
PB-DP SUB-D TERM	8460860000	C.15
PB-DP SUB-D ZF	1161890000	C.20
PB-DP SUB-D ZF TERM	1161870000	C.21
PB-DP SUB-D ZF TERM PS	1161880000	C.21
PB-DP SUB-D ZF35TERM	1173220000	C.18
PB-DP SUB-D ZF35TERM PS	1173240000	C.19
PJ PRO TINTENSET FARBE	1027110000	K.15
PJ PRO TNAW	1024140000	K.15
PJ PRO TNTK INK C	1027050000	K.15
PJ PRO TNTK INK K	1027040000	K.15
PJ PRO TNTK INK M	1027060000	K.15
PJ PRO TNTK INK Y	1027070000	K.15
POS-4P M12 M20 150mm	8425930000	C.33
POS-4P M12 M20 300mm	8425940000	C.33
POS-4P M12 PG13,5 150mm	9455650000	C.33
POS-4P M12 PG13,5 300 mm	8425910000	C.33
POS-5P M12 M20 300mm	1795500000	C.33
PRINTJET PRO 115V	1024050000	K.15
PTSC 25X12 WN5452	4311430000	G.10
PTSC 25X12 WN5452	4311430000	G.6
PTSC 25X12 WN5452	4311430000	G.9
R		
RS PB-DP T	8800040000	C.25
RS PB-DP T SUB-D	8788580000	C.25
S		
SAI AD 54	1966170000	G.13
SAI AD 54	1966170000	G.6
SAI BFSC M3x10	1966180000	G.13
SAI BFSC M3x10	4310920000	G.13
SAI BFSC M3x10	4310920000	G.6
SAI BP 30 SB KU	1246840000	G.9
SAI BP 30 SB LA	1246710000	G.10
SAI BP 54 KU	1966190000	G.13
SAI BP 54 KU	1966190000	G.6
SAI GHDE 30 S KU M12	1246810000	G.9
SAI GHDE 30 S KU M8	1246830000	G.9
SAI GHDE 30 S KU SI	1246820000	G.9
SAI GHDE 30 SB LA M12	1246670000	G.10
SAI GHDE 30 SB LA M8	1246690000	G.10
SAI GHDE 30 SB LA SIBL	1246680000	G.10
SAI GHDE 3M12 1M8 SAI	1246540000	G.8
SAI GHDE 3M12 1PG9	1246610000	G.13
SAI GHDE 3M12 1S2B	1246550000	G.8
SAI GHDE 4M12 1S3B	1246560000	G.6
SAI GHDE 4M12 2S2B	1246570000	G.8
SAI GHDE 4M12 2X1S1B	1246580000	G.8
SAI GHDE 4M12 3S1B	1246590000	G.8
SAI GHDE EA 16M8 0.SIBL	1246520000	G.6
SAI GHDE EA 8M12	1246490000	G.6
SAI GHDE EA 8M12 SIBL	1246510000	G.6
SAI JP 4P LG	1915220000	H.8
SAI JP 4P LG 100	8794090000	H.8
SAI JP 5P LG	1918520000	H.8
SAI JP 5P LG 100	8794080000	H.8
SAI M23 CRIMPING TOOL 1	1203840000	K.12
SAI M23 CRIMPING TOOL 2	1203960000	K.13
SAI O-RI 5.0X0.8 NBR	4312340000	G.10
SAI O-RI 5.0X0.8 NBR	4312340000	G.13
SAI O-RI 5.0X0.8 NBR	4312340000	G.6
SAI O-RI 5.0X0.8 NBR	4312340000	G.9
SAI O-RI 7.5X1.5 VI	4311000000	G.10
SAI O-RI 7.5X1.5 VI	4311000000	G.13
SAI O-RI 7.5X1.5 VI	4311000000	G.6
SAI O-RI 7.5X1.5 VI	4311000000	G.9
SAI RA 30 SB KU	1246660000	G.9
SAI RA 30 SB LA	1246720000	G.10
SAI RA 54 KU	1246530000	G.6
SAI Y-4S M8-M8	1805660000	D.28
SAI-10-F 3P M8 L 10M	1828650000	I.54
SAI-10-F 3P M8 L 5M	1828660000	I.54
SAI-10-S12 3P M8 L	1877950000	I.52
SAI-12-F 3P M8 L 10M	1828630000	I.54
SAI-12-F 3P M8 L 5M	1828640000	I.54
SAI-4 M 4P M12 UT	1705921000	I.7
SAI-4-F 3P IDC PUR 10M	1766730000	I.29
SAI-4-F 3P IDC PUR 5M	1766720000	I.29
SAI-4-F 3P M5 L10M	1845820000	I.58
SAI-4-F 3P M5 L5M	1851740000	I.58
SAI-4-F 3P M8 L 10M	1828710000	I.54
SAI-4-F 3P M8 L 5M	1828720000	I.54
SAI-4-F 3P M8 PUR 10M	1784630000	I.50
SAI-4-F 3P M8 PUR 5M	1784640000	I.50
SAI-4-F 4P FC 10M	1848050000	I.19
SAI-4-F 4P FC 2M	1848080000	I.19
SAI-4-F 4P FC 5M	1848060000	I.19
SAI-4-F 4P IDC PUR 10M	1766670000	I.29
SAI-4-F 4P IDC PUR 5M	1766660000	I.29
SAI-4-F 4P M12 L 10M	1070660000	I.9
SAI-4-F 4P M12 L 5M	1070650000	I.9
SAI-4-F 4P M5 L10M	1845800000	I.58
SAI-4-F 4P M5 L5M	1851770000	I.58
SAI-4-F 4P M8 L 10M	1849690000	I.54
SAI-4-F 4P M8 L 5M	1849680000	I.54
SAI-4-F 4P M8 PUR 10M	1784590000	I.50
SAI-4-F 4P M8 PUR 5M	1784600000	I.50
SAI-4-F 4P PUR 10M	9456200000	I.6
SAI-4-F 4P PUR 10M	9456200000	I.8
SAI-4-F 4P PUR 15M	9456210000	I.6
SAI-4-F 4P PUR 15M	9456210000	I.8
SAI-4-F 4P PUR 20M	9456230000	I.6
SAI-4-F 4P PUR 20M	9456230000	I.8
SAI-4-F 4P PUR 3M	9456180000	I.8
SAI-4-F 4P PUR 5M	9456190000	I.6
SAI-4-F 4P PUR 5M	9456190000	I.8
SAI-4-F 5P CNOMO 10M	1861560000	I.23
SAI-4-F 5P CNOMO 5M	1861570000	I.23
SAI-4-F 5P FC 10M	1847930000	I.19
SAI-4-F 5P FC 2M	1847940000	I.19
SAI-4-F 5P FC 5M	1847950000	I.19
SAI-4-F 5P M12 L 10M	1070640000	I.9
SAI-4-F 5P M12 L 5M	1070630000	I.9
SAI-4-F 5P PUR 10M	9456340000	I.6
SAI-4-F 5P PUR 10M	9456340000	I.8
SAI-4-F 5P PUR 15M	9456350000	I.6
SAI-4-F 5P PUR 15M	9456350000	I.8
SAI-4-F 5P PUR 20M	9456370000	I.6
SAI-4-F 5P PUR 20M	9456370000	I.8
SAI-4-F 5P PUR 3M	9456320000	I.8
SAI-4-F 5P PUR 5M	9456330000	I.6
SAI-4-F 5P PUR 5M	9456330000	I.8
SAI-4-FMM-4P M12 10M	9456200002	I.33
SAI-4-FMM-4P M12 10M	9456200002	I.34
SAI-4-FMM-4P M12 10M	9456200002	I.6
SAI-4-FMM-4P M12 5M	9456190002	I.33
SAI-4-FMM-4P M12 5M	9456190002	I.34
SAI-4-FMM-4P M12 5M	9456190002	I.6
SAI-4-M 3P IDC	1760040000	I.28
SAI-4-M 3P IDC UT	1760041000	I.28
SAI-4-M 3P M8	1784680000	I.50
SAI-4-M 4P Exi Z1 IL	1868360000	I.61
SAI-4-M 4P Exi Z1 OL	1868350000	I.61
SAI-4-M 4P IDC	1766780000	I.28
SAI-4-M 4P IDC UT	1766781000	I.28
SAI-4-M 4P M12	1705920000	I.7
SAI-4-M 4P M8	1784700000	I.50
SAI-4-M 5P M12	1701230000	I.7
SAI-4-M 5P M12 1:1	1806010000	I.38
SAI-4-M 5P M12 ECO	1892100000	I.17
SAI-4-M 5P M12 ECO UT	1892101000	I.17
SAI-4-M 5P M12 Ex ia	1896050000	I.61
SAI-4-M 5P M12 M1:1 UT	1806011000	I.38
SAI-4-M 5P M12 NPN ECO	1892100005	I.17
SAI-4-M 5P M12 OL	1800000000	I.7
SAI-4-M 5P M12 UT	1701231000	I.7
SAI-4-M 5P M12 ZF	1854000000	I.7
SAI-4-M 8P M12	1807640000	I.39
SAI-4-M 8P M12 UT	1807641000	I.39
SAI-4-M23 4P M8	1784660000	I.51

Type	Order No.	Page
SAI-4-M23 4P M8	1784660000	J.33
SAI-4-MF 5P PUR 10M	1804580000	I.44
SAI-4-MF 5P PUR 5M	1804600000	I.44
SAI-4-MH-4P M12	1705922000	I.36
SAI-4-MH-5P M12	1701232000	I.36
SAI-4-MHD-4P M12	1705923000	I.37
SAI-4-MHD-5P M12	1701233000	I.37
SAI-4-MM 5P M12	1783500000	I.35
SAI-4-MMS 4P M12	1783540000	I.35
SAI-4-MMS 5P M12	1783520000	I.35
SAI-4-MMS 5P M12 1:1	1897680000	I.38
SAI-4-S 3P M8 L	1828740000	I.52
SAI-4-S 3P M8 L OL	1051760000	I.52
SAI-4-S 4P FC	1847960000	I.20
SAI-4-S 4P FC	1847960000	J.31
SAI-4-S 4P M12	9456000000	I.12
SAI-4-S 4P M12	9456000000	I.6
SAI-4-S 4P M5	1845840000	I.58
SAI-4-S 5P CNOMO	1861540000	I.23
SAI-4-S 5P FC	1847970000	I.20
SAI-4-S 5P FC	1847970000	J.31
SAI-4-S 5P M12	9456000001	I.12
SAI-4-S 5P M12	9456000001	I.6
SAI-4-S16 3P M5	1845890000	I.59
SAI-4-S16 4P M5	1845870000	I.59
SAI-4-S8 4P M12 L	1267330000	I.11
SAI-4-SH 4P FC	1859110000	I.21
SAI-4-SH 4P FC	1859110000	J.32
SAI-4-SH 5P FC	1859130000	I.21
SAI-4-SH 5P FC	1859130000	J.32
SAI-4/6/8 MH MH BLZF3,5	1782750000	I.36
SAI-4/6/8 MH-MH BL 3.5	1724752000	I.36
SAI-4/6/8 MH-MHD BL 3.5	1724753000	I.37
SAI-4/6/8 MH-MM BL 3.5	1724754000	I.35
SAI-4/6/8-MH BL3.5	1724750000	I.7
SAI-4/6/8-MH BL3.5 SV	1724750050	I.7
SAI-4/6/8-MH BLZF3.5	1752080000	I.7
SAI-4/6/8-MH BLZF3.5 SV	1752080050	I.7
SAI-4/6/8-MH LEER	1783460000	I.7
SAI-4/6/8-MHF 4P PUR 4M	1791450400	I.44
SAI-4/6/8-MHF 4P PUR 6M	1791450600	I.44
SAI-4/6/8-MHF 4P PUR 9M	1791450900	I.44
SAI-4/6/8-MHF 4P PUR14M	1791451400	I.44
SAI-4/6/8-MHF 4P PUR20M	1791452000	I.44
SAI-4/6/8-MHF 4P PUR28M	1791452800	I.44
SAI-4/6/8-MHF 4P PUR34M	1791453400	I.44
SAI-4/6/8-MHF 5P PUR 4M	1791460400	I.44
SAI-4/6/8-MHF 5P PUR 6M	1791460600	I.44
SAI-4/6/8-MHF 5P PUR 9M	1791460900	I.44
SAI-4/6/8-MHF 5P PUR14M	1791461400	I.44
SAI-4/6/8-MHF 5P PUR16M	1791461600	I.44
SAI-4/6/8-MHF 5P PUR20M	1791462000	I.44
SAI-4/6/8-MHF 5P PUR28M	1791462800	I.44
SAI-4/6/8-MHF 5P PUR34M	1791463400	I.44
SAI-4/6/8-MHF 5P PUR40M	1791464000	I.44
SAI-4/6/8-MHF 5P PUR50M	1791465000	I.44
SAI-4/6/8-MHF 5P PUR55M	1791465500	I.44
SAI-6-F 3P IDC PUR 10M	1766750000	I.29
SAI-6-F 3P IDC PUR 5M	1766740000	I.29
SAI-6-F 3P M8 L 10M	1828690000	I.54
SAI-6-F 3P M8 L 5M	1828700000	I.54
SAI-6-F 4P IDC PUR 10M	1766690000	I.29
SAI-6-F 4P IDC PUR 5M	1766680000	I.29
SAI-6-F 4P M12 L 10M	1265930000	I.10
SAI-6-F 4P M12 L 5M	1265920000	I.10
SAI-6-F 4P M8 L 10M	1849670000	I.54
SAI-6-F 4P M8 L 5M	1849700000	I.54
SAI-6-F 4P PUR 10M	9456480000	I.6
SAI-6-F 4P PUR 10M	9456480000	I.8
SAI-6-F 4P PUR 15M	9456490000	I.6
SAI-6-F 4P PUR 15M	9456490000	I.8
SAI-6-F 4P PUR 20M	9456510000	I.6
SAI-6-F 4P PUR 20M	9456510000	I.8
SAI-6-F 4P PUR 3M	9456460000	I.8
SAI-6-F 4P PUR 5M	9456470000	I.6
SAI-6-F 4P PUR 5M	9456470000	I.8
SAI-6-F 5P PUR 10M	9456620000	I.6
SAI-6-F 5P PUR 10M	9456620000	I.8
SAI-6-F 5P PUR 15M	9456630000	I.6
SAI-6-F 5P PUR 15M	9456630000	I.8
SAI-6-F 5P PUR 20M	9456650000	I.6
SAI-6-F 5P PUR 20M	9456650000	I.8
SAI-6-F 5P PUR 3M	9456600000	I.8
SAI-6-F 5P PUR 5M	9456610000	I.6
SAI-6-F 5P PUR 5M	9456610000	I.8
SAI-6-M 3P IDC	1760050000	I.28
SAI-6-M 3P IDC UT	1760051000	I.28
SAI-6-M 4P IDC	1766790000	I.28
SAI-6-M 4P IDC UT	1766791000	I.28
SAI-6-M 4P M12	1705930000	I.7
SAI-6-M 4P M12 UT	1705931000	I.7
SAI-6-M 5P M12	1701240000	I.7
SAI-6-M 5P M12 ECO	1892090000	I.17
SAI-6-M 5P M12 ECO UT	1892091000	I.17
SAI-6-M 5P M12 Ex ia	1896070000	I.61
SAI-6-M 5P M12 UT	1701241000	I.7
SAI-6-MH-4P M12	1705932000	I.36
SAI-6-MH-5P M12	1701242000	I.36
SAI-6-MHD-4P M12	1705933000	I.37

Type	Order No.	Page
SAI-6-MHD-5P M12	1701243000	I.37
SAI-6-S 3P M8 L	1828730000	I.52
SAI-6-S 3P M8 L OL	1932380000	I.52
SAI-6-S 3P M8 L SL	1057720000	I.53
SAI-6-S 4P M12	9456010000	I.12
SAI-6-S 4P M12	9456010000	I.6
SAI-6-S 5P M12	9456010001	I.12
SAI-6-S 5P M12	9456010001	I.6
SAI-6-S12 4P M12 L	1265940000	I.11
SAI-8-B 4P M12 F10	1812170000	I.43
SAI-8-B 5P M12 SL	1847560000	I.41
SAI-8-F 3P IDC PUR 10M	1766770000	I.29
SAI-8-F 3P IDC PUR 5M	1766760000	I.29
SAI-8-F 3P M5 L10M	1845830000	I.58
SAI-8-F 3P M5 L5M	1851760000	I.58
SAI-8-F 3P M8 L 10M	1828670000	I.54
SAI-8-F 3P M8 L 5M	1828680000	I.54
SAI-8-F 3P M8 PUR 10M	1784610000	I.50
SAI-8-F 3P M8 PUR 5M	1784620000	I.50
SAI-8-F 4P FC 10M	1847980000	I.19
SAI-8-F 4P FC 2M	1847990000	I.19
SAI-8-F 4P FC 5M	1848000000	I.19
SAI-8-F 4P IDC PUR 10M	1766710000	I.29
SAI-8-F 4P IDC PUR 5M	1766700000	I.29
SAI-8-F 4P M5 L10M	1845810000	I.58
SAI-8-F 4P M5 L5M	1851750000	I.58
SAI-8-F 4P M8 L 10M	1828610000	I.54
SAI-8-F 4P M8 L 5M	1828620000	I.54
SAI-8-F 4P M8 PUR 10M	1784570000	I.50
SAI-8-F 4P M8 PUR 5M	1784580000	I.50
SAI-8-F 4P PUR 10M	9456760000	I.6
SAI-8-F 4P PUR 10M	9456760000	I.8
SAI-8-F 4P PUR 15M	9456770000	I.6
SAI-8-F 4P PUR 15M	9456770000	I.8
SAI-8-F 4P PUR 20M	9456790000	I.6
SAI-8-F 4P PUR 20M	9456790000	I.8
SAI-8-F 4P PUR 3M	9456740000	I.8
SAI-8-F 4P PUR 5M	9456750000	I.6
SAI-8-F 4P PUR 5M	9456750000	I.8
SAI-8-F 5P 10M 0.5/1.0U	9457600000	I.8
SAI-8-F 5P 15M 0.5/1.0U	1784510000	I.8
SAI-8-F 5P 20M 0.5/1.0U	1784500000	I.8
SAI-8-F 5P 2M 0.5/1.0U	7915030000	I.8
SAI-8-F 5P 5M 0.5/1.0U	9457590000	I.8
SAI-8-F 5P CNOMO 10M	1861590000	I.23
SAI-8-F 5P CNOMO 5M	1861550000	I.23
SAI-8-F 5P FC 10M	1848010000	I.19
SAI-8-F 5P FC 2M	1848020000	I.19
SAI-8-F 5P FC 5M	1848030000	I.19
SAI-8-F 5P M12 5M VA	1865310000	I.30
SAI-8-F 5P NPN-PNP 5M	1814990000	I.40
SAI-8-F 5P PUR 10M	9456900000	I.6
SAI-8-F 5P PUR 10M	9456900000	I.8
SAI-8-F 5P PUR 15M	9456910000	I.6
SAI-8-F 5P PUR 15M	9456910000	I.8
SAI-8-F 5P PUR 20M	9456930000	I.6
SAI-8-F 5P PUR 20M	9456930000	I.8
SAI-8-F 5P PUR 3M	9456880000	I.8
SAI-8-F 5P PUR 5M	9456890000	I.6
SAI-8-F 5P PUR 5M	9456890000	I.8
SAI-8-FMM-4P M12 10M	9456760002	I.33
SAI-8-FMM-4P M12 10M	9456760002	I.34
SAI-8-FMM-4P M12 10M	9456760002	I.6
SAI-8-FMM-4P M12 5M	9456750002	I.33
SAI-8-FMM-4P M12 5M	9456750002	I.34
SAI-8-FMM-4P M12 5M	9456750002	I.6
SAI-8-M 3P IDC	1760060000	I.28
SAI-8-M 3P IDC UT	1760061000	I.28
SAI-8-M 3P M8	1784670000	I.50
SAI-8-M 4P Exi Z1 IL	1868370000	I.61
SAI-8-M 4P Exi Z1 OL	1894380000	I.61
SAI-8-M 4P IDC	1766800000	I.28
SAI-8-M 4P IDC UT	1766801000	I.28
SAI-8-M 4P M12	1705940000	I.7
SAI-8-M 4P M12 UT	1705941000	I.7
SAI-8-M 4P M8	1784690000	I.50
SAI-8-M 5P FC	1848070000	I.22
SAI-8-M 5P M12	1701250000	I.7
SAI-8-M 5P M12 ECO	1892080000	I.17
SAI-8-M 5P M12 ECO UT	1892081000	I.17
SAI-8-M 5P M12 Ex ia	1896090000	I.61
SAI-8-M 5P M12 NPN	1781060000	I.7
SAI-8-M 5P M12 NPN ECO	1892080005	I.17
SAI-8-M 5P M12 OL UT	1740191000	I.7
SAI-8-M 5P M12 UT	1701251000	I.7
SAI-8-M 5P M12 ZF III	1767880000	I.7
SAI-8-M-4P M12 DIP	1059430000	I.14
SAI-8-M16 3P M8	1795900000	I.51
SAI-8-M16 4P M12	1831020000	I.13
SAI-8-M23 4P M8	1784650000	I.51
SAI-8-M23 4P M8	1784650000	J.33
SAI-8-MF 4P PUR 10M M12	1789190000	I.44
SAI-8-MF 4P PUR 5M M12	1799960000	I.44
SAI-8-MF 5P PUR 10m	9457430000	I.44
SAI-8-MF 5P PUR 5M	1804590000	I.44
SAI-8-MF 5P PUR 5M OL	9457350000	I.44
SAI-8-MH-4P M12	1705942000	I.36
SAI-8-MH-5P M12	1701252000	I.36
SAI-8-MH-5P M12 ZF III	1782760000	I.36

Type	Order No.	Page
SAI-8-MHD-4P M12	1705943000	I.37
SAI-8-MHD-5P M12	1701253000	I.37
SAI-8-MM 5P M12	1783490000	I.35
SAI-8-MM 5P M12 UT	1783491000	I.35
SAI-8-MMH 5P M12 ZF	1782740000	I.35
SAI-8-MMS 4P M12	1783530000	I.35
SAI-8-MMS 5P M12	1783510000	I.35
SAI-8-S 3P M5	1845850000	I.58
SAI-8-S 4P FC	1847920000	I.20
SAI-8-S 4P FC	1847920000	J.31
SAI-8-S 4P M12	9456020000	I.12
SAI-8-S 4P M12	9456020000	I.6
SAI-8-S 5P CNOMO	1861580000	I.23
SAI-8-S 5P FC	1848040000	I.20
SAI-8-S 5P FC	1848040000	J.31
SAI-8-S 5P M12	1795470000	I.12
SAI-8-S12 3P M8 L	1871680000	I.52
SAI-8-S16 3P M5	1845880000	I.59
SAI-8-S16/19P 4P M5	1845860000	I.59
SAI-8-SH 4P FC	1859120000	I.21
SAI-8-SH 4P FC	1859120000	J.32
SAI-8-SH 5P FC	1859140000	I.21
SAI-8-SH 5P FC	1859140000	J.32
SAI-8-SHB 5P F13 FC	1872460000	I.25
SAI-8-SHB 5P FC	1872440000	I.24
SAI-ASI T FF small	1026090000	C.61
SAI-ASI T FFR	1924980000	C.61
SAI-ASI T FR	1925010000	C.60
SAI-ASI-L-M12-4I V3	1962680000	C.59
SAI-ASI-L-M12-4I/4O V3	1962710000	C.59
SAI-ASI-L-M12-4O V3	1962700000	C.59
SAI-ASI-L-M12-8I V3	1962690000	C.59
SAI-ASI-L-M8-4I V3	1962640000	C.59
SAI-ASI-L-M8-4I/4O V3	1962670000	C.59
SAI-ASI-L-M8-4O V3	1962660000	C.59
SAI-ASI-L-M8-8I V3	1962650000	C.59
SAI-AU ET SET M12 A COD	1235340000	G.7
SAI-AU M12 CAN 16DI	1906650000	F.12
SAI-AU M12 CAN 16DI	1906650000	F.14
SAI-AU M12 CAN 16DI	1906650000	F.4
SAI-AU M12 CAN 16DI/8DO	1906660000	F.12
SAI-AU M12 CAN 16DI/8DO	1906660000	F.14
SAI-AU M12 CAN 16DI/8DO	1906660000	F.4
SAI-AU M12 CAN AI/AO/DI	1906670000	F.13
SAI-AU M12 CAN AI/AO/DI	1906670000	F.14
SAI-AU M12 CAN AI/AO/DI	1906670000	F.4
SAI-AU M12 DN 16DI	1906700000	F.16
SAI-AU M12 DN 16DI	1906700000	F.18
SAI-AU M12 DN 16DI	1906700000	F.4
SAI-AU M12 DN 16DI/8DO	1906710000	F.16
SAI-AU M12 DN 16DI/8DO	1906710000	F.18
SAI-AU M12 DN 16DI/8DO	1906710000	F.4
SAI-AU M12 DN AI/AO/DI	1906720000	F.17
SAI-AU M12 DN AI/AO/DI	1906720000	F.18
SAI-AU M12 DN AI/AO/DI	1906720000	F.4
SAI-AU M12 DN GW 16DI	1938570000	F.24
SAI-AU M12 DN GW 16DI	1938570000	F.25
SAI-AU M12 DN GW 16DI	1938570000	F.4
SAI-AU M12 PB 16DI	1890020000	F.8
SAI-AU M12 PB 16DI/8DO	1890010000	F.8
SAI-AU M12 PB 8DI8DO 2A	1968220000	F.10
SAI-AU M12 PB 8DI8DO 2A	1968220000	F.4
SAI-AU M12 PB 8DI8DO 2A	1968220000	F.8
SAI-AU M12 PB AI/AO/DI	1890000000	F.9
SAI-AU M12 PB GW 16DI	1938550000	F.22
SAI-AU M12 PB GW 16DI	1938550000	F.23
SAI-AU M12 PB GW 16DI	1938550000	F.4
SAI-AU M12 SB 2Counter	1938730000	F.23
SAI-AU M12 SB 2Counter	1938730000	F.25
SAI-AU M12 SB 2Counter	1938730000	F.27
SAI-AU M12 SB 2Counter	1938730000	F.30
SAI-AU M12 SB 2Counter	1938730000	F.4
SAI-AU M12 SB 4AI	1938690000	F.23
SAI-AU M12 SB 4AI	1938690000	F.25
SAI-AU M12 SB 4AI	1938690000	F.27
SAI-AU M12 SB 4AI	1938690000	F.29
SAI-AU M12 SB 4AI	1938690000	F.4
SAI-AU M12 SB 4AO	1938700000	F.23
SAI-AU M12 SB 4AO	1938700000	F.25
SAI-AU M12 SB 4AO	1938700000	F.27
SAI-AU M12 SB 4AO	1938700000	F.29
SAI-AU M12 SB 4AO	1938700000	F.4
SAI-AU M12 SB 4PT100	1938710000	F.23
SAI-AU M12 SB 4PT100	1938710000	F.25
SAI-AU M12 SB 4PT100	1938710000	F.27
SAI-AU M12 SB 4PT100	1938710000	F.32
SAI-AU M12 SB 4PT100	1938710000	F.4
SAI-AU M12 SB 4Thermo	1938720000	F.23
SAI-AU M12 SB 4Thermo	1938720000	F.25
SAI-AU M12 SB 4Thermo	1938720000	F.27
SAI-AU M12 SB 4Thermo	1938720000	F.31
SAI-AU M12 SB 4Thermo	1938720000	F.4
SAI-AU M12 SB 8DI	1938610000	F.23
SAI-AU M12 SB 8DI	1938610000	F.25
SAI-AU M12 SB 8DI	1938610000	F.27
SAI-AU M12 SB 8DI	1938610000	F.28
SAI-AU M12 SB 8DI	1938610000	F.4
SAI-AU M12 SB 8DIO	1938640000	F.23
SAI-AU M12 SB 8DIO	1938640000	F.25

Type	Order No.	Page
SAI-AU M12 SB 8DIO	1938640000	F.27
SAI-AU M12 SB 8DIO	1938640000	F.28
SAI-AU M12 SB 8DIO	1938640000	F.4
SAI-AU M12 SB 8DO 2A	1938680000	F.23
SAI-AU M12 SB 8DO 2A	1938680000	F.25
SAI-AU M12 SB 8DO 2A	1938680000	F.27
SAI-AU M12 SB 8DO 2A	1938680000	F.28
SAI-AU M12 USB GW 8I8O	1962240000	F.26
SAI-AU M12 USB GW 8I8O	1962240000	F.27
SAI-AU M12 USB GW 8I8O	1962240000	F.4
SAI-AU M8 CAN 16DI	1906680000	F.12
SAI-AU M8 CAN 16DI	1906680000	F.14
SAI-AU M8 CAN 16DI	1906680000	F.4
SAI-AU M8 CAN 16DI/8DO	1906690000	F.12
SAI-AU M8 CAN 16DI/8DO	1906690000	F.14
SAI-AU M8 CAN 16DI/8DO	1906690000	F.4
SAI-AU M8 DN 16DI	1906730000	F.16
SAI-AU M8 DN 16DI	1906730000	F.18
SAI-AU M8 DN 16DI	1906730000	F.4
SAI-AU M8 DN 16DI/8DO	1906740000	F.16
SAI-AU M8 DN 16DI/8DO	1906740000	F.18
SAI-AU M8 DN 16DI/8DO	1906740000	F.4
SAI-AU M8 PB 16DI	1906550000	F.10
SAI-AU M8 PB 16DI	1906550000	F.4
SAI-AU M8 PB 16DI	1906550000	F.8
SAI-AU M8 PB 16DI/8DO	1906640000	F.10
SAI-AU M8 PB 16DI/8DO	1906640000	F.4
SAI-AU M8 PB 16DI/8DO	1906640000	F.8
SAI-AU M8 PB 8DI8DO 2A	1975450000	F.10
SAI-AU M8 PB 8DI8DO 2A	1975450000	F.4
SAI-AU M8 PB 8DI8DO 2A	1975450000	F.8
SAI-AU M8 PB GW 16DI	1024310000	F.22
SAI-AU M8 SB 8DI	1938600000	F.23
SAI-AU M8 SB 8DI	1938600000	F.25
SAI-AU M8 SB 8DI	1938600000	F.27
SAI-AU M8 SB 8DI	1938600000	F.28
SAI-AU M8 SB 8DI	1938600000	F.4
SAI-AU M8 SB 8DIO	1938630000	F.23
SAI-AU M8 SB 8DIO	1938630000	F.25
SAI-AU M8 SB 8DIO	1938630000	F.27
SAI-AU M8 SB 8DIO	1938630000	F.28
SAI-AU M8 SB 8DIO	1938630000	F.4
SAI-AU M8 SB 8DO 2A	1938660000	F.23
SAI-AU M8 SB 8DO 2A	1938660000	F.25
SAI-AU M8 SB 8DO 2A	1938660000	F.27
SAI-AU M8 SB 8DO 2A	1938660000	F.28
SAI-AU M8 SB 8DO 2A	1938660000	F.4
SAI-DC-TOOL	1795020000	I.27
SAI-M23-BE-12	1995850000	J.14
SAI-M23-BE-12-10MM	1224170000	J.21
SAI-M23-BE-12-10MM-G	1224590000	J.21
SAI-M23-BE-12-10MM-PE-G	1224610000	J.21
SAI-M23-BE-12-17MM	1224210000	J.21
SAI-M23-BE-12-3.5MM-PE	1224190000	J.21
SAI-M23-BE-12-F	1224150000	J.21
SAI-M23-BE-12-F-G	1224570000	J.21
SAI-M23-BE-12-G	1296730000	J.14
SAI-M23-BE-16	1170090000	J.15
SAI-M23-BE-16-17MM	1224280000	J.22
SAI-M23-BE-16-3.5MM	1224270000	J.22
SAI-M23-BE-16-F	1224250000	J.22
SAI-M23-BE-17	1170110000	J.15
SAI-M23-BE-17-10 MM	1224350000	J.22
SAI-M23-BE-17-10MM-G	1224680000	J.22
SAI-M23-BE-17-17MM	1224360000	J.22
SAI-M23-BE-17-17MM-G	1224690000	J.22
SAI-M23-BE-17-F	1224330000	J.22
SAI-M23-BE-17-F-G	1224660000	J.22
SAI-M23-BE-19	1170130000	J.15
SAI-M23-BE-19-10MM	1224420000	J.23
SAI-M23-BE-19-17MM	1224450000	J.23
SAI-M23-BE-19-F	1224400000	J.23
SAI-M23-BE-6	1170020000	J.14
SAI-M23-BE-6-17MM	1224040000	J.20
SAI-M23-BE-7	1170040000	J.14
SAI-M23-BE-7-17MM	1224110000	J.20
SAI-M23-BE-7-3.5MM	1224100000	J.20
SAI-M23-BE-7-F	1224080000	J.20
SAI-M23-BE-9	1170060000	J.14
SAI-M23-BE-9-10MM	1224520000	J.21
SAI-M23-BE-9-10MM-G	1224750000	J.21
SAI-M23-BE-9-17MM	1224530000	J.21
SAI-M23-BE-9-17MM-G	1224760000	J.21
SAI-M23-BE-9-F	1224500000	J.21
SAI-M23-BE-9-F-G	1224740000	J.21
SAI-M23-BE-L-4/4	1995810000	J.28
SAI-M23-BE-L-6	1170370000	J.28
SAI-M23-GS-7/12	1995840000	J.12
SAI-M23-GS-L-11/17	1299390000	J.12
SAI-M23-GS-L-7/12	1995800000	J.26
SAI-M23-GS-S-7/12	1169920000	J.12
SAI-M23-GSW-L-7/12	1170280000	J.26
SAI-M23-KBC-0.08/0.56	1995860000	J.16
SAI-M23-KBC-0.08/0.56	1995860000	K.12
SAI-M23-KBC-0.08/0.56	1995860000	K.13
SAI-M23-KBC-0.25/1.00	1995830000	J.29
SAI-M23-KBC-0.25/1.00	1995830000	K.12
SAI-M23-KBC-0.34/1.00	1170180000	J.16
SAI-M23-KBC-0.34/1.00	1170180000	K.12

Type	Order No.	Page
SAI-M23-KBC-0.75/2.50	1995820000	J.29
SAI-M23-KBC-0.75/2.50	1995820000	K.12
SAI-M23-KBC-1.00-1.5	1170210000	J.16
SAI-M23-KBC-1.5-.14-.56	1170230000	J.16
SAI-M23-KBC-1.5-.14-.56	1170230000	K.12
SAI-M23-KBC-1.5-.56-1.0	1170240000	J.16
SAI-M23-KBC-1.5-.56-1.0	1170240000	K.12
SAI-M23-KBC-2-0.75-2.5	1170260000	J.17
SAI-M23-KBC-2-0.75-2.5	1170260000	K.12
SAI-M23-KBC-L-2.5-4.0	1170420000	J.29
SAI-M23-KBC-L-2.5-4.0	1170420000	K.12
SAI-M23-KS-7/12	1169900000	J.12
SAI-M23-KS-L-7/12	1170270000	J.26
SAI-M23-KSC-0,25-1.0	1170390000	J.29
SAI-M23-KSC-0,25-1.0	1170390000	K.12
SAI-M23-KSC-0.08/0.56	1170140000	J.16
SAI-M23-KSC-0.14/1.00	1170150000	J.16
SAI-M23-KSC-0.14/1.00	1170150000	K.12
SAI-M23-KSC-1.00-1.5	1170170000	J.16
SAI-M23-KSC-1.5-0.14-1	1170220000	J.16
SAI-M23-KSC-1.5-0.14-1	1170220000	K.12
SAI-M23-KSC-2-0.75-2.5	1170250000	J.17
SAI-M23-KSC-2-0.75-2.5	1170250000	K.12
SAI-M23-KSC-L-0.75-2.5	1170400000	J.29
SAI-M23-KSC-L-0.75-2.5	1170400000	K.12
SAI-M23-KSC-L-2.5-4.0	1170410000	J.29
SAI-M23-KSC-L-2.5-4.0	1170410000	K.12
SAI-M23-KSW-L-7/12	1170290000	J.26
SAI-M23-SE-12	1170070000	J.14
SAI-M23-SE-12-10MM	1224220000	J.21
SAI-M23-SE-12-10MM-PE-G	1224620000	J.21
SAI-M23-SE-12-12MM-G	1224630000	J.21
SAI-M23-SE-12-17MM	1224230000	J.21
SAI-M23-SE-12-17MM-G	1224640000	J.21
SAI-M23-SE-12-3.5MM	1224160000	J.21
SAI-M23-SE-12-3.5MM-G	1224580000	J.21
SAI-M23-SE-12-3.5MM-PE	1224180000	J.21
SAI-M23-SE-12-F	1224140000	J.21
SAI-M23-SE-12-F-G	1224560000	J.21
SAI-M23-SE-16	1170080000	J.15
SAI-M23-SE-16-10MM	1224290000	J.22
SAI-M23-SE-16-17MM	1224310000	J.22
SAI-M23-SE-16-3.5MM	1224260000	J.22
SAI-M23-SE-16-F	1224240000	J.22
SAI-M23-SE-17	1170100000	J.15
SAI-M23-SE-17-10MM	1224370000	J.22
SAI-M23-SE-17-10MM-G	1224710000	J.22
SAI-M23-SE-17-17MM	1224380000	J.22
SAI-M23-SE-17-17MM-G	1224720000	J.22
SAI-M23-SE-17-3.5MM	1224340000	J.22
SAI-M23-SE-17-3.5MM-G	1224670000	J.22
SAI-M23-SE-17-F	1224320000	J.22
SAI-M23-SE-17-F-G	1224650000	J.22
SAI-M23-SE-19	1170120000	J.15
SAI-M23-SE-19-10MM	1224470000	J.23
SAI-M23-SE-19-10MM-PE	1224430000	J.23
SAI-M23-SE-19-17MM	1224480000	J.23
SAI-M23-SE-19-3,5MMPE12	1224460000	J.23
SAI-M23-SE-19-3.5MM	1224410000	J.23
SAI-M23-SE-19-3.5MM-PE	1224440000	J.23
SAI-M23-SE-19-F	1224390000	J.23
SAI-M23-SE-6	1170000000	J.14
SAI-M23-SE-6-10MM	1224050000	J.20
SAI-M23-SE-6-17MM	1224060000	J.20
SAI-M23-SE-7	1170030000	J.14
SAI-M23-SE-7-10MM	1224120000	J.20
SAI-M23-SE-7-17MM	1224130000	J.20
SAI-M23-SE-7-3.5MM	1224090000	J.20
SAI-M23-SE-7-F	1224070000	J.20
SAI-M23-SE-9	1170050000	J.14
SAI-M23-SE-9-10MM	1224540000	J.21
SAI-M23-SE-9-10MM-G	1224770000	J.21
SAI-M23-SE-9-17MM	1224550000	J.21
SAI-M23-SE-9-17MM-G	1224780000	J.21
SAI-M23-SE-9-3.5MM	1224510000	J.21
SAI-M23-SE-9-F	1224490000	J.21
SAI-M23-SE-9-F-G	1224730000	J.21
SAI-M23-SE-L-4/4	1170380000	J.28
SAI-M23-SE-L-6	1170350000	J.28
SAI-SA-3-IDC	9457720000	I.26
SAI-SA-4-IDC	1766810000	I.26
SAI-SCREWTY BOX	1939180000	K.6
SAI-SCREWTY TOOL BOX	1939170000	K.6
SAI-SK M12 MT	1802750000	D.31
SAI-SK M5	1855310000	D.31
SAI-SK M8	1802760000	C.59
SAI-SK M8	1802760000	D.31
SAI-SK M8	1802760000	F.10
SAI-SK Stecker M12	1781520000	D.31
SAI-SK Stecker M12	1781520000	F.10
SAI-SK-M12	9456050000	C.59
SAI-SK-M12	9456050000	D.31
SAI-SK-M12	9456050000	F.10
SAI-SK-M12	9456050000	F.14
SAI-SK-M12	9456050000	F.18
SAI-SK-M12	9456050000	F.23
SAI-SK-M12	9456050000	F.25
SAI-SK-M12	9456050000	F.27
SAI-SK-M12	9456050000	F.37

Type	Order No.	Page
SAI-SK-M12 BU	8425960000	D.31
SAI-SK-M12 IDC	1794850000	D.31
SAI-SK-M12 IDC	1794850000	I.27
SAI-SK-M12-UNI	2330260000	D.31
SAI-SK-M12-UNI	2330260000	F.10
SAI-SK-M12-UNI	2330260000	F.14
SAI-SK-M12-UNI	2330260000	F.18
SAI-SK-M12-UNI	2330260000	F.23
SAI-SK-M12-UNI	2330260000	F.25
SAI-SK-M12-UNI	2330260000	F.27
SAI-SK-M12-UNI	2330260000	F.37
SAI-SSA-PG7	1938300000	D.42
SAI-T-5-M12/M12 B-COD	1004310150	B.27
SAI-T-5-M12/M12 B-COD	1057940000	D.29
SAI-T-5S-PARA	1001180001	K.15
SAI-TS35 MF	1917400000	I.45
SAI-WDF 5P B M12 60mm	1820690000	D.30
SAI-WDF 5P M12 60mm	1819450000	D.30
SAI-Y-4-4/2-4 M12/8	1783420000	D.28
SAI-Y-4S-M12/M12	1060730000	D.28
SAI-Y-5S B2-4 2M12	1783410000	D.28
SAI-Y-5S M12/M12 2Bo	1881710000	D.30
SAI-Y-5S PARA 2M12	1783430000	D.28
SAI-Y-5S PARA 2M12	1783430000	H.7
SAI-Y-5S- M12/M12	1826880000	D.28
SAIB 5/9-VA	1920710000	C.31
SAIB 5/9-VA	1920710000	D.12
SAIB 5/9-VA	1920710000	I.31
SAIB 5/9-VA-B-COD	1920730000	C.11
SAIB 5/9-VA-B-COD	1920730000	D.12
SAIB 5/9-VA-B-COD	1920730000	I.31
SAIB-12/9-(TL)	1924960000	D.11
SAIB-12/9-(TL)	1924960000	D.5
SAIB-3-IDC (0,75) M12	1852730000	D.25
SAIB-3-IDC-M12B-COD	1864740000	C.13
SAIB-3-IDC-M12B-COD	1864740000	D.16
SAIB-3-IDC-M8 small	1784030001	D.26
SAIB-3/7	1815670300	B.7
SAIB-3/7	1010840050	C.74
SAIB-3/7	1021490000	D.5
SAIB-3/7	1021490000	D.7
SAIB-3/7	1224020000	J.20
SAIB-3/9	1021510000	D.5
SAIB-4-IDC (0,75) M12	1852750000	D.25
SAIB-4-IDC-M12 small	1781540001	D.24
SAIB-4-IDC-M8 small	1784050001	D.26
SAIB-4/11-1.5	1353730000	D.9
SAIB-4/11-7/8"	1292050000	E.7
SAIB-4/7	9457240000	D.5
SAIB-4/7	9457240000	D.7
SAIB-4/7-(KV)	1921080000	D.10
SAIB-4/9	1807230000	D.7
SAIB-4/9-7/8"	1812480000	E.6
SAIB-5/11-1.5	1353750000	D.9
SAIB-5/11-7/8"	1292010000	E.7
SAIB-5/6S M12 5P A-COD	1191020000	C.32
SAIB-5/6S M12 5P A-COD	1191020000	D.15
SAIB-5/7	9457250000	D.5
SAIB-5/7	9457250000	D.8
SAIB-5/7-(KV)	1921070000	D.10
SAIB-5/7-ZF	1924970000	D.19
SAIB-5/7-ZF	1924970000	D.5
SAIB-5/9	1807250000	D.8
SAIB-5/9-7/8"	1292000000	E.6
SAIB-8/9	1836960000	D.8
SAIB-M-5/8S M12 5P A-COD	1784750000	C.32
SAIB-M-5/8S M12 5P A-COD	1784750000	D.15
SAIB-M23-12P-AN-1,0M	1877440100	J.30
SAIB-M23-12P-ST-1,0M	1886440100	J.30
SAIB-M23-19P-ST-1,0M	1818180100	J.30
SAIB-M8-3P	1803870000	D.20
SAIB-M8-4P	1803880000	D.20
SAIB-VSA-3P/230/11-H/OB	1873150000	D.40
SAIB-VSA-3P/230/9-H/OB	1873130000	D.40
SAIB-VSA-3P/230/9/LD	1873110000	D.40
SAIB-VSA-3P/24/9/LD	1873120000	D.40
SAIB-VSA-3P/250/11-OB	1873090000	D.40
SAIB-VSA-3P/250/9-OB	1873070000	D.40
SAIB-VSA-4P/230/11-H/OB	1873160000	D.40
SAIB-VSA-4P/230/9-H/OB	1873140000	D.40
SAIB-VSA-4P/250/11-OB	1873100000	D.40
SAIB-VSA-4P/250/9-OB	1873080000	D.40
SAIB-VSB-3P/24/9/LD	1873180000	D.40
SAIB-VSB-3P/250/9-OB	1873170000	D.40
SAIB-VSBD-3P/250/9-OB	1873190000	D.40
SAIB-VSC-3P/250/7-OB	1873200000	D.40
SAIB-VSC-4P/250/7-OB	1873210000	D.40
SAIB-VSCD-3P/250/7-OB	1873220000	D.40
SAIB-VSCD-4P/250/7-OB	1873230000	D.40
SAIBM 5/8S M12 5P B-COD	1784780000	C.12
SAIBM 5/8S M12 5P B-COD	1784780000	D.16
SAIBM-4/8S-M12 4P A-ZF	1784740002	D.5
SAIBM-4/8S-M12 4P D-ZF	1892130001	D.18
SAIBM-4/8S-M12-4P D-COD	1892130000	C.77
SAIBM-4/8S-M12-4P D-COD	1892130000	D.16
SAIBM-8/11S-M12	1118920000	D.14
SAIBM-8/9S-M12	1258930000	D.14
SAIBM-M8-3P(TL)	1921010000	D.21
SAIBM-M8-3P(TL)	1921010000	D.6

Type	Order No.	Page
SAIBM-M8-4P(TL)	1921020000	D.21
SAIBM-M8-4P(TL)	1921020000	D.6
SAIBW-12/9-(TL)	1925870000	D.11
SAIBW-3/7	1021310000	D.5
SAIBW-3/9	1021320000	D.7
SAIBW-4-IDC M12	1812890000	D.24
SAIBW-4/11-7/8"	1292070000	E.7
SAIBW-4/7	9457700000	D.5
SAIBW-4/7	9457700000	D.7
SAIBW-4/7-(KV)	1935610000	D.10
SAIBW-4/8S-M12 4P D-ZF	1139330000	D.18
SAIBW-4/9	1807240000	D.7
SAIBW-4/9-7/8"	1812470000	E.6
SAIBW-5/11-7/8"	1292030000	E.7
SAIBW-5/7	9457260000	D.5
SAIBW-5/7	9457260000	D.8
SAIBW-5/7-(KV)	1962630000	D.10
SAIBW-5/8S-M12 5P A-ZF	1275750000	D.5
SAIBW-5/9	1807330000	D.8
SAIBW-5/9-7/8"	1292020000	E.6
SAIBW-M-4/8 M12	1803910000	C.32
SAIBW-M-4/8 M12	1803910000	D.15
SAIBW-M-5/8 M12	1803920000	C.32
SAIBW-M-5/8 M12	1803920000	D.15
SAIBW-M-5/8 M12 B-COD	1944580000	C.12
SAIBW-M-5/8 M12 B-COD	1944580000	D.17
SAIBW-M-5/8 M12 B-COD	1944580000	D.5
SAIBW-M8-3P(TL)	1920970000	D.22
SAIBW-M8-3P(TL)	1920970000	D.6
SAIBW-M8-4P(TL)	1920980000	D.22
SAIBW-M8-4P(TL)	1920980000	D.6
SAIE-7/8"B-3-0.2U-H	1292390000	E.8
SAIE-7/8"B-3-0.2U-PG11	1292370000	E.9
SAIE-7/8"B-3-0.2U-PG13.5	1292380000	E.10
SAIE-7/8"B-4-0.2U-H	1292450000	E.8
SAIE-7/8"B-4-0.2U-PG11	1292430000	E.9
SAIE-7/8"B-4-0.2U-PG13.5	1292440000	E.10
SAIE-7/8"B-5-0.2U-H	1292520000	E.8
SAIE-7/8"B-5-0.2U-PG11	1292500000	E.9
SAIE-7/8"B-5-0.2U-PG13.5	1292510000	E.10
SAIE-7/8"S-3-0.2U-H	1292350000	E.8
SAIE-7/8"S-3-0.2U-PG11	1292330000	E.9
SAIE-7/8"S-3-0.2U-PG13.5	1292340000	E.10
SAIE-7/8"S-4-0.2U-H	1292420000	E.8
SAIE-7/8"S-4-0.2U-PG11	1292400000	E.9
SAIE-7/8"S-4-0.2U-PG13.5	1292410000	E.10
SAIE-7/8"S-5-0.2-PG11	1292470000	E.9
SAIE-7/8"S-5-0.2U-H	1292490000	E.8
SAIE-7/8"S-5-0.2U-PG13.5	1292480000	E.10
SAIE-EW-M20/PG9-SW24-VA	1950270000	C.33
SAIE-M12B-4-0.5U P9 1.5	1353780000	D.34
SAIE-M12B-4-0.5U-FP-M16	1861190000	D.33
SAIE-M12B-4-0.5U-M16	1861120000	D.33
SAIE-M12B-4-0.5U-PG9	1861250000	D.35
SAIE-M12B-5-0.5U-FP-M16	1856110000	D.33
SAIE-M12B-5-0.5U-M16	1836910000	D.33
SAIE-M12B-5-0.5U-PG9	1814890000	D.35
SAIE-M12B-5-LP	1312970000	D.37
SAIE-M12B-8-0,5U-M16	1861140000	D.33
SAIE-M12B-8-0.5U-FP-M16	1861210000	D.33
SAIE-M12B-8-0.5U-PG9	1861270000	D.35
SAIE-M12B-PB-0.5U HW	1279480050	C.10
SAIE-M12B-PB-1.0U HW	1279480100	C.10
SAIE-M12B-PB-2.0U HW	1279480200	C.10
SAIE-M12S-4-0.5U P9 1.5	1353770000	D.34
SAIE-M12S-4-0.5U-AEH-VA	1861220001	C.33
SAIE-M12S-4-0.5U-FP-M16	1861160000	D.33
SAIE-M12S-4-0.5U-M16	1861090000	D.33
SAIE-M12S-4-0.5U-PG9	1861220000	D.35
SAIE-M12S-5-0.5U-FP-M16	1861170000	D.33
SAIE-M12S-5-0.5U-M16	1861230000	D.33
SAIE-M12S-5-0.5U-PG9	1856120000	D.35
SAIE-M12S-5-LP	1312980000	D.37
SAIE-M12S-5S0.5U HW	1341230050	D.38
SAIE-M12S-8-0.5U-FP-M16	1861180000	D.33
SAIE-M12S-8-0.5U-M16	1861110000	D.33
SAIE-M12S-8-0.5U-PG9	1861240000	D.35
SAIE-M12S-8S0.5U HW	1341240050	D.38
SAIE-M16B-4-L	1326720000	D.39
SAIE-M16B-5-L	1326730000	D.39
SAIE-M16B-7-L	1326740000	D.39
SAIE-M16S-5-HWM	1269790000	D.39
SAIE-M23-L-EM	1170320000	J.27
SAIE-M23-L-HW	1170340000	J.27
SAIE-M23-L-RM	1170310000	J.27
SAIE-M23-L-VW	1170300000	J.27
SAIE-M23-L-W	1170330000	J.27
SAIE-M23-S-EM	1169970000	J.13
SAIE-M23-S-HW	1169990000	J.13
SAIE-M23-S-RM	1169950000	J.13
SAIE-M23-S-VW	1169940000	J.13
SAIE-M23-S-W	1169980000	J.13
SAIE-M5B-3-0.2U	1873060000	D.36
SAIE-M5B-4-0.2U	1873040000	D.36
SAIE-M5S-3-0.2U	1873050000	D.36
SAIE-M5S-4-0.2U	1873030000	D.36
SAIE-M8B-3-0.5U-FP-M8	1856130000	D.36
SAIE-M8B-4-0.5U-FP-M8	1856140000	D.36
SAIE-M8R-3-0.5U-FP-M8	1861280000	D.35

Type	Order No.	Page
SAIE-M8R-4-0.5U-FP-M8	1861290000	D.35
SAIE-M8S-3-0.5U-FP-M8	1078730000	D.36
SAIE-M8S-4-0.5U-FP-M8	1078720000	D.36
SAIEND CAN M8 4P	1955340000	C.65
SAIEND CAN M8 4P	1955340000	F.23
SAIEND CAN M8 4P	1955340000	F.25
SAIEND CAN M8 4P	1955340000	F.27
SAIEND CAN-M12 5P A-COD	1784760000	F.14
SAIEND PB M12 5P B-COD	1784770000	F.10
SAIH-PB-2X0.24-PUR	1232620000	C.8
SAIH-PB-2X0.34-PVC	1933640000	C.9
SAIH-PB-PA-2X1.0-PVC-BL	1232630000	C.30
SAIH-PB-PA-2X1.0-PVC-SW	1232640000	C.30
SAIH-SLL-3x0,25mm²(PUR)	1902140000	B.56
SAIH-SLL-3x0,25mm²(PVC)	1902190000	B.56
SAIH-SLL-3x0,34mm²(PUR)	1902110000	B.56
SAIH-SLL-3x0,34mm²(PVC)	1902160000	B.56
SAIH-SLL-3x0,75-8x0,34	9457420000	B.57
SAIH-SLL-3X0.34 SI PUR	1357320000	B.56
SAIH-SLL-3X0.34-UGE	1345520000	B.56
SAIH-SLL-3X0.75-16X0.34	9457560000	B.57
SAIH-SLL-3X1.0-16X0.5	1344720000	B.57
SAIH-SLL-4x0,25mm²(PUR)	1902120000	B.56
SAIH-SLL-4x0,25mm²(PVC)	1902170000	B.56
SAIH-SLL-4x0,34mm²(PUR)	1902130000	B.56
SAIH-SLL-4x0,34mm²(PVC)	1902180000	B.56
SAIH-SLL-4X0.34 SI PUR	1357330000	B.56
SAIH-SLL-4X0.34-UGE	1345530000	B.56
SAIH-SLL-5X0,75-16X0,34	9457970000	B.57
SAIH-SLL-5X0.34 SI PUR	1357340000	B.56
SAIH-SLL-5X0.34-UGE	1345540000	B.56
SAIL-7/8"BG-3-1.5U	1292100150	E.11
SAIL-7/8"BG-4-1.5U	1292140150	E.11
SAIL-7/8"BG-5-1.5U	1292190150	E.11
SAIL-7/8"BW-3-1.5U	1292110150	E.11
SAIL-7/8"BW-4-1.5U	1292150150	E.11
SAIL-7/8"BW-5-1.5U	1292200150	E.11
SAIL-7/8"G-3-1.5U	1292080150	E.11
SAIL-7/8"G-4-1.5U	1292120150	E.11
SAIL-7/8"G-5-1.5U	1292170150	E.11
SAIL-7/8"W-3-1.5U	1292090150	E.11
SAIL-7/8"W-4-1.5U	1292130150	E.11
SAIL-7/8"W-5-1.5U	1292180150	E.11
SAIL-M12BG-12-1.5U	1879710150	B.14
SAIL-M12BG-3-1.5UGE	1092910150	B.11
SAIL-M12BG-3-1.5T	1968590150	B.11
SAIL-M12BG-3-1.5U	9457820150	B.11
SAIL-M12BG-3-1.5U	9457820150	B.6
SAIL-M12BG-3-1.5V	1925570150	B.11
SAIL-M12BG-3-1.5V	1925570150	B.6
SAIL-M12BG-3-10U	9457821000	B.6
SAIL-M12BG-3-10V	1925571000	B.6
SAIL-M12BG-3-3.0U	9457820300	B.6
SAIL-M12BG-3-3.0V	1925570300	B.6
SAIL-M12BG-3-5.0U	9457820500	B.6
SAIL-M12BG-3-5.0V	1925570500	B.6
SAIL-M12BG-3-X.XU	9457820000	B.6
SAIL-M12BG-3-X.XV	1925570000	B.6
SAIL-M12BG-3B-1.5U	1057740150	B.43
SAIL-M12BG-3S1.5U	1867410150	B.17
SAIL-M12BG-4-1.5UGE	1092920150	B.11
SAIL-M12BG-4-1.5T	1968580150	B.11
SAIL-M12BG-4-1.5U	9457730150	B.11
SAIL-M12BG-4-1.5U	9457730150	B.6
SAIL-M12BG-4-1.5V	1925580150	B.11
SAIL-M12BG-4-1.5V	1925580150	B.6
SAIL-M12BG-4-10U	9457731000	B.6
SAIL-M12BG-4-10V	1925581000	B.6
SAIL-M12BG-4-3.0U	9457730300	B.6
SAIL-M12BG-4-3.0V	1925580300	B.6
SAIL-M12BG-4-5.0U	9457730500	B.6
SAIL-M12BG-4-5.0V	1925580500	B.6
SAIL-M12BG-4-X.XU	9457730000	B.6
SAIL-M12BG-4-X.XV	1925580000	B.6
SAIL-M12BG-4B-1.5U	1057750150	B.43
SAIL-M12BG-4S1.5U	1812540150	B.17
SAIL-M12BG-5-1.5UGE	1092930150	B.11
SAIL-M12BG-5-1.5T	1021670150	B.11
SAIL-M12BG-5-1.5U	9457910150	B.11
SAIL-M12BG-5-1.5U	9457910150	B.7
SAIL-M12BG-5-1.5V	1925590150	B.11
SAIL-M12BG-5-1.5V	1925590150	B.7
SAIL-M12BG-5-10U	9457911000	B.7
SAIL-M12BG-5-10V	1925591000	B.7
SAIL-M12BG-5-3.0U	9457910300	B.7
SAIL-M12BG-5-3.0V	1925590300	B.7
SAIL-M12BG-5-5.0U	9457910500	B.7
SAIL-M12BG-5-5.0V	1925590500	B.7
SAIL-M12BG-5-X.XU	9457910000	B.7
SAIL-M12BG-5-X.XV	1925590000	B.7
SAIL-M12BG-5B-1.5U	1061880150	B.43
SAIL-M12BG-5S1.5U	9456140150	B.17
SAIL-M12BG-8-1.5U	1865870150	B.14
SAIL-M12BG-8S1.5U	1890520150	B.15
SAIL-M12BG-CD-1.5A	1964690150	C.62
SAIL-M12BG-CD-1.5B	1060120150	C.62
SAIL-M12BG-PB-1.5D	1873320150	C.6
SAIL-M12BW-12-1.5U	1898240150	B.14
SAIL-M12BW-3-1.5UGE	1092940150	B.11

Type	Order No.	Page
SAIL-M12BW-3-1.5T	1968560150	B.11
SAIL-M12BW-3-1.5U	9457320150	B.11
SAIL-M12BW-3-1.5U	9457320150	B.7
SAIL-M12BW-3-1.5V	1925630150	B.11
SAIL-M12BW-3-1.5V	1925630150	B.7
SAIL-M12BW-3-10U	9457321000	B.7
SAIL-M12BW-3-10V	1925631000	B.7
SAIL-M12BW-3-3.0U	9457320300	B.7
SAIL-M12BW-3-3.0V	1925630300	B.7
SAIL-M12BW-3-5.0U	9457320500	B.7
SAIL-M12BW-3-5.0V	1925630500	B.7
SAIL-M12BW-3-X.XU	9457320000	B.7
SAIL-M12BW-3-X.XV	1925630000	B.7
SAIL-M12BW-3B-1.5U	1061890150	B.43
SAIL-M12BW-3L1.5UGE	1114880150	B.16
SAIL-M12BW-3L1.5U	9457800150	B.16
SAIL-M12BW-3L1.5U	9457800150	B.8
SAIL-M12BW-3L1.5V	1925460150	B.16
SAIL-M12BW-3L1.5V	1925460150	B.8
SAIL-M12BW-3L10U	9457801000	B.8
SAIL-M12BW-3L10V	1925461000	B.8
SAIL-M12BW-3L3.0U	9457800300	B.8
SAIL-M12BW-3L3.0V	1925460300	B.8
SAIL-M12BW-3L5.0U	9457800500	B.8
SAIL-M12BW-3L5.0V	1925460500	B.8
SAIL-M12BW-3LX.XU	9457800000	B.8
SAIL-M12BW-3LX.XV	1925460000	B.8
SAIL-M12BW-3S1.5U	1906950150	B.17
SAIL-M12BW-4-1.5UGE	1092960150	B.11
SAIL-M12BW-4-1.5T	1968570150	B.11
SAIL-M12BW-4-1.5U	9457740150	B.11
SAIL-M12BW-4-1.5U	9457740150	B.7
SAIL-M12BW-4-1.5V	1925640150	B.11
SAIL-M12BW-4-1.5V	1925640150	B.7
SAIL-M12BW-4-10U	9457741000	B.7
SAIL-M12BW-4-10V	1925641000	B.7
SAIL-M12BW-4-2L1.5UGE	1092950150	B.16
SAIL-M12BW-4-2L1.5U	9456380150	B.16
SAIL-M12BW-4-2L1.5U	9456380150	B.8
SAIL-M12BW-4-2L1.5V	1925470150	B.16
SAIL-M12BW-4-2L1.5V	1925470150	B.8
SAIL-M12BW-4-2L10U	9456381000	B.8
SAIL-M12BW-4-2L10V	1925471000	B.8
SAIL-M12BW-4-2L3.0U	9456380300	B.8
SAIL-M12BW-4-2L3.0V	1925470300	B.8
SAIL-M12BW-4-2L5.0U	9456380500	B.8
SAIL-M12BW-4-2L5.0V	1925470500	B.8
SAIL-M12BW-4-2LX.XU	9456380000	B.8
SAIL-M12BW-4-2LX.XV	1925470000	B.8
SAIL-M12BW-4-3.0U	9457740300	B.7
SAIL-M12BW-4-3.0V	1925640300	B.7
SAIL-M12BW-4-3L1.5U	1963940150	B.16
SAIL-M12BW-4-3L1.5V	1963960150	B.16
SAIL-M12BW-4-5.0U	9457740500	B.7
SAIL-M12BW-4-5.0V	1925640500	B.7
SAIL-M12BW-4-X.XV	1925640000	B.7
SAIL-M12BW-4B-1.5U	1061900150	B.43
SAIL-M12BW-4S1.5U	1808970150	B.17
SAIL-M12BW-5-1.5UGE	1092970150	B.11
SAIL-M12BW-5-1.5T	1021690150	B.11
SAIL-M12BW-5-1.5U	9457690150	B.11
SAIL-M12BW-5-1.5U	9457690150	B.7
SAIL-M12BW-5-1.5V	1925650150	B.11
SAIL-M12BW-5-1.5V	1925650150	B.7
SAIL-M12BW-5-10U	9457691000	B.7
SAIL-M12BW-5-10V	1925651000	B.7
SAIL-M12BW-5-3.0U	9457690300	B.7
SAIL-M12BW-5-3.0V	1925650300	B.7
SAIL-M12BW-5-5.0U	9457690500	B.7
SAIL-M12BW-5-5.0V	1925650500	B.7
SAIL-M12BW-5-X.XU	9457690000	B.7
SAIL-M12BW-5-X.XV	1925650000	B.7
SAIL-M12BW-5B-1.5U	1057760150	B.43
SAIL-M12BW-5S1.5U	1906540150	B.17
SAIL-M12BW-8-1.5U	1883460150	B.14
SAIL-M12BW-8S1.5U	1275470150	B.15
SAIL-M12BW-CD-1.5A	1061980150	C.62
SAIL-M12BW-CD-1.5B	1062180150	C.62
SAIL-M12BW-PB-1.5D	1062300150	C.6
SAIL-M12BW-PB-1.5E	1062370150	C.6
SAIL-M12G-12-1.5U	1311700150	B.14
SAIL-M12G-3-1.5UGE	1092980150	B.11
SAIL-M12G-3-1.5T	1021750150	B.11
SAIL-M12G-3-1.5U	9457810150	B.11
SAIL-M12G-3-1.5U	9457810150	B.4
SAIL-M12G-3-1.5V	1925430150	B.11
SAIL-M12G-3-1.5V	1925430150	B.4
SAIL-M12G-3-10U	9457811000	B.4
SAIL-M12G-3-10V	1925431000	B.4
SAIL-M12G-3-3.0U	9457810300	B.4
SAIL-M12G-3-3.0V	1925430300	B.4
SAIL-M12G-3-5.0U	9457810500	B.4
SAIL-M12G-3-5.0V	1925430500	B.4
SAIL-M12G-3-X.XU	9457810000	B.4
SAIL-M12G-3-X.XV	1925430000	B.4
SAIL-M12G-3B-1.5U	1057770150	B.43
SAIL-M12G-3S1.5U	1906470150	B.17
SAIL-M12G-4-1.5UGE	1077750150	B.11
SAIL-M12G-4-1.5T	1021770150	B.11
SAIL-M12G-4-1.5U	9456100150	B.11
SAIL-M12G-4-1.5U	9456100150	B.4
SAIL-M12G-4-1.5V	1925440150	B.11
SAIL-M12G-4-1.5V	1925440150	B.4
SAIL-M12G-4-10U	9456101000	B.4
SAIL-M12G-4-10V	1925441000	B.4
SAIL-M12G-4-3.0U	9456100300	B.4
SAIL-M12G-4-3.0V	1925440300	B.4
SAIL-M12G-4-5.0U	9456100500	B.4
SAIL-M12G-4-5.0V	1925440500	B.4
SAIL-M12G-4-X.XU	9456100000	B.4
SAIL-M12G-4-X.XV	1925440000	B.4
SAIL-M12G-4B-1.5U	1057780150	B.43
SAIL-M12G-4S1.5U	1906480150	B.17
SAIL-M12G-5-1.5UGE	1092990150	B.11
SAIL-M12G-5-1.5T	1021650150	B.11
SAIL-M12G-5-1.5U	9457610150	B.11
SAIL-M12G-5-1.5U	9457610150	B.4
SAIL-M12G-5-1.5V	1925450150	B.11
SAIL-M12G-5-1.5V	1925450150	B.4
SAIL-M12G-5-10U	9457611000	B.4
SAIL-M12G-5-10V	1925451000	B.4
SAIL-M12G-5-3.0U	9457610300	B.4
SAIL-M12G-5-3.0V	1925450300	B.4
SAIL-M12G-5-5.0U	9457610500	B.4
SAIL-M12G-5-5.0V	1925450500	B.4
SAIL-M12G-5-X.XU	9457610000	B.4
SAIL-M12G-5-X.XV	1925450000	B.4
SAIL-M12G-5B-1.5U	1057790150	B.43
SAIL-M12G-5S1.5U	1926690150	B.17
SAIL-M12G-8-1.5U	1279410150	B.14
SAIL-M12G-8S1.5U	1279430150	B.15
SAIL-M12G-CD-1.5A	1964700150	C.62
SAIL-M12G-CD-1.5B	1060110150	C.62
SAIL-M12G-PB-1.5D	1873300150	C.6
SAIL-M12GM12G-2/4-1.5UGE	1093000150	B.26
SAIL-M12GM12G-2/4-1.5U	9456990150	B.26
SAIL-M12GM12G-2/4-1.5V	1925330150	B.26
SAIL-M12GM12G-3-1.5UGE	1093010150	B.25
SAIL-M12GM12G-3-1.5T	1021710150	B.25
SAIL-M12GM12G-3-1.5U	9457230150	B.25
SAIL-M12GM12G-3-1.5U	9457230150	B.6
SAIL-M12GM12G-3-1.5V	1925300150	B.25
SAIL-M12GM12G-3-1.5V	1925300150	B.6
SAIL-M12GM12G-3-10U	9457231000	B.6
SAIL-M12GM12G-3-10V	1925301000	B.6
SAIL-M12GM12G-3-3.0U	9457230300	B.6
SAIL-M12GM12G-3-3.0V	1925300300	B.6
SAIL-M12GM12G-3-5.0U	9457230500	B.6
SAIL-M12GM12G-3-5.0V	1925300500	B.6
SAIL-M12GM12G-3-X.XU	9457230000	B.6
SAIL-M12GM12G-3-X.XV	1925300000	B.6
SAIL-M12GM12G-3-X.XV	1815670500	B.7
SAIL-M12GM12G-3-X.XV	1283550000	D.33
SAIL-M12GM12G-3-X.XV	1224030000	J.20
SAIL-M12GM12G-3B-1.5U	1057830150	B.44
SAIL-M12GM12G-3S1.5U	1058490150	B.28
SAIL-M12GM12G-4-0.3U	1906300030	H.7
SAIL-M12GM12G-4-0.5U	1906300050	H.7
SAIL-M12GM12G-4-1.5UGE	1093020150	B.25
SAIL-M12GM12G-4-1.5T	1021730150	B.25
SAIL-M12GM12G-4-1.5U	1906300150	B.25
SAIL-M12GM12G-4-1.5U	1906300150	B.6
SAIL-M12GM12G-4-1.5U	1906300150	H.7
SAIL-M12GM12G-4-1.5V	1925310150	B.25
SAIL-M12GM12G-4-1.5V	1925310150	B.6
SAIL-M12GM12G-4-10U	1906301000	B.6
SAIL-M12GM12G-4-10V	1925311000	B.6
SAIL-M12GM12G-4-3.0U	1906300300	B.6
SAIL-M12GM12G-4-3.0V	1925310300	B.6
SAIL-M12GM12G-4-5.0U	1906300500	B.6
SAIL-M12GM12G-4-5.0V	1925310500	B.6
SAIL-M12GM12G-4-X.XU	1906300000	B.6
SAIL-M12GM12G-4-X.XV	1925310000	B.6
SAIL-M12GM12G-4-X.XV	1815671000	B.7
SAIL-M12GM12G-4-X.XV	1289140000	D.33
SAIL-M12GM12G-4B-1.5U	1057840150	B.44
SAIL-M12GM12G-4S1.5U	1058500150	B.28
SAIL-M12GM12G-5-0.3U	9457340030	H.7
SAIL-M12GM12G-5-0.6U	9457340060	H.7
SAIL-M12GM12G-5-1.5UGE	1093030150	B.25
SAIL-M12GM12G-5-1.5T	1011970150	B.25
SAIL-M12GM12G-5-1.5U	9457340150	B.25
SAIL-M12GM12G-5-1.5U	9457340150	B.7
SAIL-M12GM12G-5-1.5U	9457340150	H.7
SAIL-M12GM12G-5-1.5V	1925320150	B.25
SAIL-M12GM12G-5-1.5V	1925320150	B.7
SAIL-M12GM12G-5-10U	9457341000	B.7
SAIL-M12GM12G-5-10V	1925321000	B.7
SAIL-M12GM12G-5-3.0U	9457340300	B.7
SAIL-M12GM12G-5-3.0V	1925320300	B.7
SAIL-M12GM12G-5-5.0U	9457340500	B.7
SAIL-M12GM12G-5-5.0V	1925320500	B.7
SAIL-M12GM12G-5-X.XU	9457340000	B.7
SAIL-M12GM12G-5-X.XU	9457740000	B.7
SAIL-M12GM12G-5-X.XV	1925320000	B.7
SAIL-M12GM12G-5-X.XV	1291870000	E.6
SAIL-M12GM12G-5-X.XV	1816610000	I.7
SAIL-M12GM12G-5B-1.5U	1057850150	B.44
SAIL-M12GM12G-5S1.5U	1058510150	B.28
SAIL-M12GM12G-8-1.5U	1279440150	B.14
SAIL-M12GM12G-8S1.5U	1279460150	B.15
SAIL-M12GM12G-CD-1.5A	1964710150	C.63
SAIL-M12GM12G-CD-1.5B	1060130150	C.63
SAIL-M12GM12G-PB-1.5D	1873310150	C.7
SAIL-M12GM12W-2/4-1.5UGE	1093040150	B.26
SAIL-M12GM12W-2/4-1.5U	9457890150	B.26
SAIL-M12GM12W-2/4-1.5V	1925370150	B.26
SAIL-M12GM12W-3-1.5UGE	1093050150	B.25
SAIL-M12GM12W-3-1.5T	1021720150	B.25
SAIL-M12GM12W-3-1.5U	9457390150	B.25
SAIL-M12GM12W-3-1.5U	9457390150	B.7
SAIL-M12GM12W-3-1.5V	1925340150	B.25
SAIL-M12GM12W-3-1.5V	1925340150	B.7
SAIL-M12GM12W-3-10U	9457391000	B.7
SAIL-M12GM12W-3-10V	1925341000	B.7
SAIL-M12GM12W-3-3.0U	9457390300	B.7
SAIL-M12GM12W-3-3.0V	1925340300	B.7
SAIL-M12GM12W-3-5.0U	9457390500	B.7
SAIL-M12GM12W-3-5.0V	1925340500	B.7
SAIL-M12GM12W-3-X.XU	9457390000	B.7
SAIL-M12GM12W-3-X.XV	1925340000	B.7
SAIL-M12GM12W-3-X.XV	1291880000	E.7
SAIL-M12GM12W-3-X.XV	1818090100	J.30
SAIL-M12GM12W-3B-1.5U	1057900150	B.44
SAIL-M12GM12W-3L1.5U	9457790150	B.27
SAIL-M12GM12W-3L1.5U	9457790150	B.8
SAIL-M12GM12W-3L1.5V	1925410150	B.27
SAIL-M12GM12W-3L1.5V	1925410150	B.8
SAIL-M12GM12W-3L10U	9457791000	B.8
SAIL-M12GM12W-3L10V	1925411000	B.8
SAIL-M12GM12W-3L3.0U	9457790300	B.8
SAIL-M12GM12W-3L3.0V	1925410300	B.8
SAIL-M12GM12W-3L5.0U	9457790500	B.8
SAIL-M12GM12W-3L5.0V	1925410500	B.8
SAIL-M12GM12W-3LX.XU	9457790000	B.8
SAIL-M12GM12W-3LX.XV	1925410000	B.8
SAIL-M12GM12W-3LX.XV	1291940000	E.7
SAIL-M12GM12W-3S1.5U	1059470150	B.28
SAIL-M12GM12W-4-1.5UGE	1093070150	B.25
SAIL-M12GM12W-4-1.5T	1021740150	B.25
SAIL-M12GM12W-4-1.5U	9457310150	B.25
SAIL-M12GM12W-4-1.5U	9457310150	B.7
SAIL-M12GM12W-4-1.5V	1925350150	B.25
SAIL-M12GM12W-4-1.5V	1925350150	B.7
SAIL-M12GM12W-4-10U	9457311000	B.7
SAIL-M12GM12W-4-10V	1925351000	B.7
SAIL-M12GM12W-4-2L1.5U	1906410150	B.27
SAIL-M12GM12W-4-2L1.5U	1906410150	B.8
SAIL-M12GM12W-4-2L1.5V	1925420150	B.27
SAIL-M12GM12W-4-2L1.5V	1925420150	B.8
SAIL-M12GM12W-4-2L10U	1906411000	B.8
SAIL-M12GM12W-4-2L10V	1925421000	B.8
SAIL-M12GM12W-4-2L3.0U	1906410300	B.8
SAIL-M12GM12W-4-2L3.0V	1925420300	B.8
SAIL-M12GM12W-4-2L5.0U	1906410500	B.8
SAIL-M12GM12W-4-2L5.0V	1925420500	B.8
SAIL-M12GM12W-4-2LX.XU	1906410000	B.8
SAIL-M12GM12W-4-2LX.XV	1925420000	B.8
SAIL-M12GM12W-4-2LX.XV	1291950000	E.7
SAIL-M12GM12W-4-3.0U	9457310300	B.7
SAIL-M12GM12W-4-3.0V	1925350300	B.7
SAIL-M12GM12W-4-3L1.5U	1963910150	B.27
SAIL-M12GM12W-4-3L1.5V	1963930150	B.27
SAIL-M12GM12W-4-3LW1.5UGE	1093060150	B.27
SAIL-M12GM12W-4-3LW1.5T	1020930150	B.27
SAIL-M12GM12W-4-5.0U	9457310500	B.7
SAIL-M12GM12W-4-5.0V	1925350500	B.7
SAIL-M12GM12W-4-X.XU	9457310000	B.7
SAIL-M12GM12W-4-X.XV	1925350000	B.7
SAIL-M12GM12W-4-X.XV	1291890000	E.6
SAIL-M12GM12W-4-X.XV	1818140100	J.30
SAIL-M12GM12W-4B-1.5U	1057910150	B.44
SAIL-M12GM12W-4S1.5U	1059480150	B.28
SAIL-M12GM12W-5-1.5UGE	1093080150	B.25
SAIL-M12GM12W-5-1.5T	1011990150	B.25
SAIL-M12GM12W-5-1.5U	9457270150	B.25
SAIL-M12GM12W-5-1.5U	9457270150	B.7
SAIL-M12GM12W-5-1.5V	1925360150	B.25
SAIL-M12GM12W-5-1.5V	1925360150	B.7
SAIL-M12GM12W-5-10U	9457271000	B.7
SAIL-M12GM12W-5-10V	1925361000	B.7
SAIL-M12GM12W-5-3.0U	9457270300	B.7
SAIL-M12GM12W-5-3.0V	1925360300	B.7
SAIL-M12GM12W-5-5.0U	9457270500	B.7
SAIL-M12GM12W-5-5.0V	1925360500	B.7
SAIL-M12GM12W-5-X.XU	9457270000	B.7
SAIL-M12GM12W-5-X.XV	1925360000	B.7
SAIL-M12GM12W-5-X.XV	1291900000	E.7
SAIL-M12GM12W-5B-1.5U	1057920150	B.44
SAIL-M12GM12W-5S1.5U	1059540150	B.28
SAIL-M12GM12W-8-1.5U	1279450150	B.14
SAIL-M12GM12W-8S1.5U	1279470150	B.15
SAIL-M12GM12W-CD-1.5A	1061990150	C.63
SAIL-M12GM12W-CD-1.5B	1062190150	C.63
SAIL-M12GM12W-PB-1.5D	1062310150	C.7
SAIL-M12GM12W-PB-1.5E	1062380150	C.7
SAIL-M12GM8G-3-1.5U	9457770150	B.29
SAIL-M12GM8G-3-1.5U	9457770150	B.4
SAIL-M12GM8G-3-1.5V	1938170150	B.29
SAIL-M12GM8G-3-1.5V	1938170150	B.4
SAIL-M12GM8G-3-10U	9457771000	B.4
SAIL-M12GM8G-3-10V	1938171000	B.4
SAIL-M12GM8G-3-3.0U	9457770300	B.4
SAIL-M12GM8G-3-3.0V	1938170300	B.4
SAIL-M12GM8G-3-5.0U	9457770500	B.4
SAIL-M12GM8G-3-5.0V	1938170500	B.4
SAIL-M12GM8G-3-X.XU	9457770000	B.4
SAIL-M12GM8G-3-X.XV	1938170000	B.4
SAIL-M12GM8G-4-1.5U	9456660150	B.29
SAIL-M12GM8G-4-1.5U	9456660150	B.5
SAIL-M12GM8G-4-1.5V	1938200150	B.29
SAIL-M12GM8G-4-1.5V	1938200150	B.5
SAIL-M12GM8G-4-10U	9456661000	B.5
SAIL-M12GM8G-4-10V	1938201000	B.5
SAIL-M12GM8G-4-3.0U	9456660300	B.5
SAIL-M12GM8G-4-3.0V	1938200300	B.5
SAIL-M12GM8G-4-5.0U	9456660500	B.5
SAIL-M12GM8G-4-5.0V	1938200500	B.5
SAIL-M12GM8G-4-X.XU	9456660000	B.5
SAIL-M12GM8G-4-X.XV	1938200000	B.5
SAIL-M12GM8GR-3-1.5U	1984530150	B.30
SAIL-M12GM8W-3-1.5U	9457980150	B.29
SAIL-M12GM8W-3-1.5U	9457980150	B.5
SAIL-M12GM8W-3-1.5V	1938180150	B.29
SAIL-M12GM8W-3-1.5V	1938180150	B.5
SAIL-M12GM8W-3-10U	9457981000	B.5
SAIL-M12GM8W-3-10V	1938181000	B.5
SAIL-M12GM8W-3-3.0U	9457980300	B.5
SAIL-M12GM8W-3-3.0V	1938180300	B.5
SAIL-M12GM8W-3-5.0U	9457980500	B.5
SAIL-M12GM8W-3-5.0V	1938180500	B.5
SAIL-M12GM8W-3-X.XU	9457980000	B.5
SAIL-M12GM8W-3-X.XV	1938180000	B.5
SAIL-M12GM8W-3L1.5UGE	1093110150	B.31
SAIL-M12GM8W-3L1.5U	9457760150	B.31
SAIL-M12GM8W-3L1.5U	9457760150	B.5
SAIL-M12GM8W-3L1.5V	1962290150	B.31
SAIL-M12GM8W-3L10U	9457761000	B.5
SAIL-M12GM8W-3L3.0U	9457760300	B.5
SAIL-M12GM8W-3L5.0U	9457760500	B.5
SAIL-M12GM8W-3LX.XU	9457760000	B.5
SAIL-M12GM8W-4-1.5U	9456670150	B.29
SAIL-M12GM8W-4-1.5U	9456670150	B.5
SAIL-M12GM8W-4-1.5V	1938210150	B.29
SAIL-M12GM8W-4-1.5V	1938210150	B.5
SAIL-M12GM8W-4-10U	9456671000	B.5
SAIL-M12GM8W-4-10V	1938211000	B.5
SAIL-M12GM8W-4-3.0U	9456670300	B.5
SAIL-M12GM8W-4-3.0V	1938210300	B.5
SAIL-M12GM8W-4-5.0U	9456670500	B.5
SAIL-M12GM8W-4-5.0V	1938210500	B.5
SAIL-M12GM8W-4-X.XU	9456670000	B.5
SAIL-M12GM8W-4-X.XV	1938210000	B.5
SAIL-M12GM8W-4L1.5UGE	1093130150	B.31
SAIL-M12GM8W-4L1.5U	1906430150	B.31
SAIL-M12GM8W-4L1.5V	1962300150	B.31
SAIL-M12GM8WR-3-1.5UGE	1093150150	B.30
SAIL-M12GM8WR-3-1.5U	9457570150	B.30
SAIL-M12W-12-1.5U	1311690150	B.14
SAIL-M12W-3-1.5UGE	1093160150	B.11
SAIL-M12W-3-1.5T	1021760150	B.11
SAIL-M12W-3-1.5U	9456690150	B.11
SAIL-M12W-3-1.5U	9456690150	B.4
SAIL-M12W-3-1.5V	1925510150	B.11
SAIL-M12W-3-1.5V	1925510150	B.4
SAIL-M12W-3-10U	9456691000	B.4
SAIL-M12W-3-10V	1925511000	B.4
SAIL-M12W-3-3.0U	9456690300	B.4
SAIL-M12W-3-3.0V	1925510300	B.4
SAIL-M12W-3-5.0U	9456690500	B.4
SAIL-M12W-3-5.0V	1925510500	B.4
SAIL-M12W-3-X.XU	9456690000	B.4
SAIL-M12W-3-X.XV	1925510000	B.4
SAIL-M12W-3B-1.5U	1057800150	B.43
SAIL-M12W-3S1.5U	1906500150	B.17
SAIL-M12W-4-1.5UGE	1093170150	B.11
SAIL-M12W-4-1.5T	1021790150	B.11
SAIL-M12W-4-1.5U	1906260150	B.11
SAIL-M12W-4-1.5U	1906260150	B.4
SAIL-M12W-4-1.5V	1925520150	B.11
SAIL-M12W-4-1.5V	1925520150	B.4
SAIL-M12W-4-10U	1906261000	B.4
SAIL-M12W-4-10V	1925521000	B.4
SAIL-M12W-4-3.0U	1906260300	B.4
SAIL-M12W-4-3.0V	1925520300	B.4
SAIL-M12W-4-5.0U	1906260500	B.4
SAIL-M12W-4-5.0V	1925520500	B.4
SAIL-M12W-4-X.XU	1906260000	B.4
SAIL-M12W-4-X.XV	1925520000	B.4
SAIL-M12W-4B-1.5U	1057810150	B.43
SAIL-M12W-4S1.5U	1059650150	B.17
SAIL-M12W-5-1.5UGE	1093180150	B.11
SAIL-M12W-5-1.5T	1021660150	B.11
SAIL-M12W-5-1.5U	9457670150	B.11
SAIL-M12W-5-1.5U	9457670150	B.4
SAIL-M12W-5-1.5V	1925530150	B.11

Type	Order No.	Page
SAIL-M12W-5-1.5V	1925530150	B.4
SAIL-M12W-5-10U	9457671000	B.4
SAIL-M12W-5-10V	1925531000	B.4
SAIL-M12W-5-3.0U	9457670300	B.4
SAIL-M12W-5-3.0V	1925530300	B.4
SAIL-M12W-5-5.0U	9457670500	B.4
SAIL-M12W-5-5.0V	1925530500	B.4
SAIL-M12W-5-X.XU	9457670000	B.4
SAIL-M12W-5-X.XV	1925530000	B.4
SAIL-M12W-5B-1.5U	1057820150	B.43
SAIL-M12W-5S1.5U	1906520150	B.17
SAIL-M12W-8-1.5U	1279420150	B.14
SAIL-M12W-8S1.5U	1276060150	B.15
SAIL-M12W-CD-1.5A	1062220150	C.62
SAIL-M12W-CD-1.5B	1062170150	C.62
SAIL-M12W-PB-1.5D	1061970150	C.6
SAIL-M12W-PB-1.5E	1062340150	C.6
SAIL-M12WM12G-3-1.5U	1821050150	B.6
SAIL-M12WM12G-3-10U	1821051000	B.6
SAIL-M12WM12G-3-3.0U	1821050300	B.6
SAIL-M12WM12G-3-5.0U	1821050500	B.6
SAIL-M12WM12G-3-X.XU	1815670150	B.25
SAIL-M12WM12G-3-X.XU	1821050000	B.6
SAIL-M12WM12G-3-X.XU	1279490200	C.10
SAIL-M12WM12G-3-X.XU	1010840030	C.74
SAIL-M12WM12G-3-X.XU	1224010000	J.20
SAIL-M12WM12G-3B-1.5U	1057870150	B.44
SAIL-M12WM12G-4B-1.5U	1057880150	B.44
SAIL-M12WM12G-5-1.5U	9456500150	B.7
SAIL-M12WM12G-5-10U	9456501000	B.7
SAIL-M12WM12G-5-3.0U	9456500300	B.7
SAIL-M12WM12G-5-5.0U	9456500500	B.7
SAIL-M12WM12G-5-X.XU	9456500000	B.7
SAIL-M12WM12G-5B-1.5U	1057890150	B.44
SAIL-M12WM12W-3-1.5V	1925380150	B.25
SAIL-M12WM12W-3-1.5V	1925380150	B.7
SAIL-M12WM12W-3-10V	1925381000	B.7
SAIL-M12WM12W-3-3.0V	1925380300	B.7
SAIL-M12WM12W-3-5.0V	1925380500	B.7
SAIL-M12WM12W-3-X.XU	1815670000	B.7
SAIL-M12WM12W-3-X.XU	1279490100	C.10
SAIL-M12WM12W-3-X.XU	1010840015	C.74
SAIL-M12WM12W-3-X.XU	1224000000	J.20
SAIL-M12WM12W-3-X.XV	1925380000	B.7
SAIL-M12WM12W-3-X.XV	1291910000	E.6
SAIL-M12WM12W-3B-1.5U	1061910150	B.44
SAIL-M12WM12W-3S1.5U	1059720150	B.28
SAIL-M12WM12W-4-1.5U	1906310150	B.25
SAIL-M12WM12W-4-1.5U	1906310150	B.7
SAIL-M12WM12W-4-1.5V	1925390150	B.25
SAIL-M12WM12W-4-1.5V	1925390150	B.7
SAIL-M12WM12W-4-10U	1906311000	B.7
SAIL-M12WM12W-4-10V	1925391000	B.7
SAIL-M12WM12W-4-3.0U	1906310300	B.7
SAIL-M12WM12W-4-3.0V	1925390300	B.7
SAIL-M12WM12W-4-5.0U	1906310500	B.7
SAIL-M12WM12W-4-5.0V	1925390500	B.7
SAIL-M12WM12W-4-X.XU	1906310000	B.7
SAIL-M12WM12W-4-X.XV	1925390000	B.7
SAIL-M12WM12W-4-X.XV	1291920000	E.7
SAIL-M12WM12W-4B-1.5U	1061920150	B.44
SAIL-M12WM12W-4S1.5U	1059730150	B.28
SAIL-M12WM12W-5-1.5U	9457900150	B.25
SAIL-M12WM12W-5-1.5U	9457900150	B.7
SAIL-M12WM12W-5-1.5V	1925400150	B.25
SAIL-M12WM12W-5-1.5V	1925400150	B.7
SAIL-M12WM12W-5-10U	9457901000	B.7
SAIL-M12WM12W-5-10V	1925401000	B.7
SAIL-M12WM12W-5-3.0U	9457900300	B.7
SAIL-M12WM12W-5-3.0V	1925400300	B.7
SAIL-M12WM12W-5-5.0U	9457900500	B.7
SAIL-M12WM12W-5-5.0V	1925400500	B.7
SAIL-M12WM12W-5-X.XU	9457900000	B.7
SAIL-M12WM12W-5-X.XV	1925400000	B.7
SAIL-M12WM12W-5-X.XV	1291930000	E.6
SAIL-M12WM12W-5B-1.5U	1061930150	B.44
SAIL-M12WM12W-5S1.5U	1059740150	B.28
SAIL-M12WM12W-CD-1.5A	1062150150	C.63
SAIL-M12WM12W-CD-1.5B	1062210150	C.63
SAIL-M12WM12W-PB-1.5D	1062330150	C.7
SAIL-M12WM12W-PB-1.5E	1062400150	C.7
SAIL-M12WM8W-3-1.5U	1906330150	B.29
SAIL-M12WM8W-3-1.5U	1906330150	B.5
SAIL-M12WM8W-3-1.5V	1938190150	B.29
SAIL-M12WM8W-3-1.5V	1938190150	B.5
SAIL-M12WM8W-3-10U	1906331000	B.5
SAIL-M12WM8W-3-10V	1938191000	B.5
SAIL-M12WM8W-3-3.0U	1906330300	B.5
SAIL-M12WM8W-3-3.0V	1938190300	B.5
SAIL-M12WM8W-3-5.0U	1906330500	B.5
SAIL-M12WM8W-3-5.0V	1938190500	B.5
SAIL-M12WM8W-3-X.XU	1906330000	B.5
SAIL-M12WM8W-3-X.XV	1938190000	B.5
SAIL-M12WM8W-4-1.5U	1906340150	B.29
SAIL-M12WM8W-4-1.5U	1906340150	B.5
SAIL-M12WM8W-4-1.5V	1938220150	B.29
SAIL-M12WM8W-4-1.5V	1938220150	B.5
SAIL-M12WM8W-4-10U	1906341000	B.5
SAIL-M12WM8W-4-10V	1938221000	B.5

Type	Order No.	Page
SAIL-M12WM8W-4-3.0U	1906340300	B.5
SAIL-M12WM8W-4-3.0V	1938220300	B.5
SAIL-M12WM8W-4-5.0U	1906340500	B.5
SAIL-M12WM8W-4-5.0V	1938220500	B.5
SAIL-M12WM8W-4-X.XU	1906340000	B.5
SAIL-M12WM8W-4-X.XV	1938220000	B.5
SAIL-M16BW-12-1.5U	1259010150	B.40
SAIL-M23-KSW-7/12	1169930000	J.12
SAIL-M5BG-3P-1.5U	1873290150	B.23
SAIL-M5BG-4P-1.5U	1873250150	B.23
SAIL-M5BW-3P-1.5U	1873260150	B.23
SAIL-M5BW-4P-1.5U	1873270150	B.23
SAIL-M5G-3P-1.5U	1854060150	B.23
SAIL-M5G-4P-1.5U	1871700150	B.23
SAIL-M5W-3P-1.5U	1873280150	B.23
SAIL-M5W-4P-1.5U	1873240150	B.23
SAIL-M8BG-3-1.5UGE	1093190150	B.19
SAIL-M8BG-3-1.5U	9457450150	B.19
SAIL-M8BG-3-1.5U	9457450150	B.4
SAIL-M8BG-3-1.5V	1927240150	B.19
SAIL-M8BG-3-1.5V	1927240150	B.4
SAIL-M8BG-3-10U	9457451000	B.4
SAIL-M8BG-3-10V	1927241000	B.4
SAIL-M8BG-3-3.0U	9457450300	B.4
SAIL-M8BG-3-3.0V	1927240300	B.4
SAIL-M8BG-3-5.0U	9457450500	B.4
SAIL-M8BG-3-5.0V	1927240500	B.4
SAIL-M8BG-3S1.5U	1906600150	B.22
SAIL-M8BG-4-1.5UGE	1093200150	B.19
SAIL-M8BG-4-1.5U	9457850150	B.19
SAIL-M8BG-4-1.5U	9457850150	B.5
SAIL-M8BG-4-1.5V	1927260150	B.19
SAIL-M8BG-4-1.5V	1927260150	B.5
SAIL-M8BG-4-10U	9457851000	B.5
SAIL-M8BG-4-10V	1927261000	B.5
SAIL-M8BG-4-3.0U	9457850300	B.5
SAIL-M8BG-4-3.0V	1927260300	B.5
SAIL-M8BG-4-5.0U	9457850500	B.5
SAIL-M8BG-4-5.0V	1927260500	B.5
SAIL-M8BG-4S-1.5U-SB	1981910150	C.65
SAIL-M8BG-4S-10Ω-SB	1981911000	C.65
SAIL-M8BG-4S-3.0Ω-SB	1981910300	C.65
SAIL-M8BG-4S-5.0Ω-SB	1981910500	C.65
SAIL-M8BG-4S1.5U	1906610150	B.22
SAIL-M8BGR-3-1.5U	1827020150	B.20
SAIL-M8BGR-3-1.5V	1948710150	B.20
SAIL-M8BGR-4-1.5U	1948530150	B.20
SAIL-M8BGR-4-1.5V	1948730150	B.20
SAIL-M8BGS-3-X.XU	9457450000	B.4
SAIL-M8BGS-3-X.XV	1927240000	B.4
SAIL-M8BGS-4-X.XV	1927260000	B.5
SAIL-M8BW-3-1.5UGE	1093220150	B.19
SAIL-M8BW-3-1.5U	9457380150	B.19
SAIL-M8BW-3-1.5U	9457380150	B.5
SAIL-M8BW-3-1.5V	1927320150	B.19
SAIL-M8BW-3-1.5V	1927320150	B.5
SAIL-M8BW-3-10U	9457381000	B.5
SAIL-M8BW-3-10V	1927321000	B.5
SAIL-M8BW-3-3.0U	9457380300	B.5
SAIL-M8BW-3-3.0V	1927320300	B.5
SAIL-M8BW-3-5.0U	9457380500	B.5
SAIL-M8BW-3-5.0V	1927320500	B.5
SAIL-M8BW-3L1.5UGE	1093210150	B.21
SAIL-M8BW-3L1.5U	9457460150	B.21
SAIL-M8BW-3L1.5U	9457460150	B.5
SAIL-M8BW-3L1.5V	1927350150	B.21
SAIL-M8BW-3L1.5V	1927350150	B.5
SAIL-M8BW-3L10U	9457461000	B.5
SAIL-M8BW-3L10V	1927351000	B.5
SAIL-M8BW-3L3.0U	9457460300	B.5
SAIL-M8BW-3L3.0V	1927350300	B.5
SAIL-M8BW-3L5.0U	9457460500	B.5
SAIL-M8BW-3L5.0V	1927350500	B.5
SAIL-M8BW-3LX.XU	9457460000	B.5
SAIL-M8BW-3S1.5U	1906620150	B.22
SAIL-M8BW-4-1.5UGE	1093240150	B.19
SAIL-M8BW-4-1.5U	9456150150	B.19
SAIL-M8BW-4-1.5U	9456150150	B.5
SAIL-M8BW-4-1.5V	1927340150	B.19
SAIL-M8BW-4-1.5V	1927340150	B.5
SAIL-M8BW-4-10U	9456151000	B.5
SAIL-M8BW-4-10V	1927341000	B.5
SAIL-M8BW-4-3.0U	9456150300	B.5
SAIL-M8BW-4-3.0V	1927340300	B.5
SAIL-M8BW-4-5.0U	9456150500	B.5
SAIL-M8BW-4-5.0V	1927340500	B.5
SAIL-M8BW-4-X.XU	9456150000	B.5
SAIL-M8BW-4L1.5UGE	1093230150	B.21
SAIL-M8BW-4L1.5U	1906400150	B.21
SAIL-M8BW-4L1.5V	1927360150	B.21
SAIL-M8BW-4S1.5U	1906630150	B.22
SAIL-M8BWR-3-1.5U	1827010150	B.20
SAIL-M8BWR-3-1.5V	1948720150	B.20
SAIL-M8BWR-4-1.5U	1948540150	B.20
SAIL-M8BWR-4-1.5V	1948740150	B.20
SAIL-M8BWS-3-X.XU	9457380000	B.5
SAIL-M8BWS-3-X.XV	1927320000	B.5
SAIL-M8BWS-3LX.XV	1927350000	B.5
SAIL-M8BWS-4-X.XV	1927340000	B.5

Type	Order No.	Page
SAIL-M8G-3-1.5U	1824590150	B.19
SAIL-M8G-3-1.5V	1927230150	B.19
SAIL-M8G-3-1.5V	1927230150	B.4
SAIL-M8G-3-10U	1824591000	B.4
SAIL-M8G-3-10V	1927231000	B.4
SAIL-M8G-3-3.0U	1824590300	B.4
SAIL-M8G-3-3.0V	1927230300	B.4
SAIL-M8G-3-5.0U	1824590500	B.4
SAIL-M8G-3-5.0V	1927230500	B.4
SAIL-M8G-3-X.XU	1824590000	B.4
SAIL-M8G-3-X.XV	1927230000	B.4
SAIL-M8G-3S1.5U	1906560150	B.22
SAIL-M8G-4-1.5U	1906270150	B.19
SAIL-M8G-4-1.5U	1906270150	B.4
SAIL-M8G-4-1.5V	1927250150	B.19
SAIL-M8G-4-1.5V	1927250150	B.4
SAIL-M8G-4-10U	1906271000	B.4
SAIL-M8G-4-10V	1927251000	B.4
SAIL-M8G-4-3.0U	1906270300	B.4
SAIL-M8G-4-3.0V	1927250300	B.4
SAIL-M8G-4-5.0U	1906270500	B.4
SAIL-M8G-4-5.0V	1927250500	B.4
SAIL-M8G-4-X.XU	1906270000	B.4
SAIL-M8G-4-X.XV	1927250000	B.4
SAIL-M8G-4S0.1UIE	1160820010	C.68
SAIL-M8G-4S0.3UIE	1160820030	C.68
SAIL-M8G-4S0.5UIE	1160820050	C.68
SAIL-M8G-4S1.0UIE	1160820100	C.68
SAIL-M8G-4S1.5U	1906570150	B.22
SAIL-M8G-4S10UIE	1160821000	C.68
SAIL-M8G-4S2.0UIE	1160820200	C.68
SAIL-M8G-4S3.0UIE	1160820300	C.68
SAIL-M8G-4S4.0UIE	1160820400	C.68
SAIL-M8G-4S5.0UIE	1160820500	C.68
SAIL-M8G-4S7.5UIE	1160820750	C.68
SAIL-M8GM12G-3-1.5U	1937950150	B.6
SAIL-M8GM12G-3-1.5V	1938230150	B.6
SAIL-M8GM12G-3-10U	1937951000	B.6
SAIL-M8GM12G-3-10V	1938231000	B.6
SAIL-M8GM12G-3-3.0U	1937950300	B.6
SAIL-M8GM12G-3-3.0V	1938230300	B.6
SAIL-M8GM12G-3-5.0U	1937950500	B.6
SAIL-M8GM12G-3-5.0V	1938230500	B.6
SAIL-M8GM12G-3-X.XU	1937950000	B.6
SAIL-M8GM12G-3-X.XV	1938230000	B.6
SAIL-M8GM12G-4-1.5U	1937980150	B.6
SAIL-M8GM12G-4-1.5V	1938260150	B.6
SAIL-M8GM12G-4-10U	1937981000	B.6
SAIL-M8GM12G-4-10V	1938261000	B.6
SAIL-M8GM12G-4-3.0U	1937980300	B.6
SAIL-M8GM12G-4-3.0V	1938260300	B.6
SAIL-M8GM12G-4-5.0U	1937980500	B.6
SAIL-M8GM12G-4-5.0V	1938260500	B.6
SAIL-M8GM12G-4-X.XU	1937980000	B.6
SAIL-M8GM12G-4-X.XV	1938260000	B.6
SAIL-M8GM12W-3-1.5U	1937960150	B.7
SAIL-M8GM12W-3-1.5V	1938240150	B.7
SAIL-M8GM12W-3-10U	1937961000	B.7
SAIL-M8GM12W-3-10V	1938241000	B.7
SAIL-M8GM12W-3-3.0U	1937960300	B.7
SAIL-M8GM12W-3-3.0V	1938240300	B.7
SAIL-M8GM12W-3-5.0U	1937960500	B.7
SAIL-M8GM12W-3-5.0V	1938240500	B.7
SAIL-M8GM12W-3-X.XU	1937960000	B.7
SAIL-M8GM12W-3-X.XV	1938240000	B.7
SAIL-M8GM12W-4-1.5U	1937990150	B.7
SAIL-M8GM12W-4-1.5V	1938270150	B.7
SAIL-M8GM12W-4-10U	1937991000	B.7
SAIL-M8GM12W-4-10V	1938271000	B.7
SAIL-M8GM12W-4-3.0U	1937990300	B.7
SAIL-M8GM12W-4-3.0V	1938270300	B.7
SAIL-M8GM12W-4-5.0U	1937990500	B.7
SAIL-M8GM12W-4-5.0V	1938270500	B.7
SAIL-M8GM12W-4-X.XU	1937990000	B.7
SAIL-M8GM12W-4-X.XV	1938270000	B.7
SAIL-M8GM8G-3-1.5UGE	1104470150	B.32
SAIL-M8GM8G-3-1.5U	1824570150	B.32
SAIL-M8GM8G-3-1.5V	1927150150	B.32
SAIL-M8GM8G-3-1.5V	1927150150	B.4
SAIL-M8GM8G-3-10U	1824571000	B.4
SAIL-M8GM8G-3-10V	1927151000	B.4
SAIL-M8GM8G-3-3.0U	1824570300	B.4
SAIL-M8GM8G-3-3.0V	1927150300	B.4
SAIL-M8GM8G-3-5.0U	1824570500	B.4
SAIL-M8GM8G-3-5.0V	1927150500	B.4
SAIL-M8GM8G-3-X.XU	1824570000	B.4
SAIL-M8GM8G-3-X.XV	1927150000	B.4
SAIL-M8GM8G-4-1.5U	1880470150	B.32
SAIL-M8GM8G-4-1.5V	1927160150	B.32
SAIL-M8GM8G-4-1.5V	1927160150	B.5
SAIL-M8GM8G-4-10U	1880471000	B.5
SAIL-M8GM8G-4-10V	1927161000	B.5
SAIL-M8GM8G-4-3.0U	1880470300	B.5
SAIL-M8GM8G-4-3.0V	1927160300	B.5
SAIL-M8GM8G-4-5.0U	1880470500	B.5
SAIL-M8GM8G-4-5.0V	1927160500	B.5
SAIL-M8GM8G-4-X.XU	1880470000	B.5
SAIL-M8GM8G-4-X.XV	1927160000	B.5
SAIL-M8GM8G-4S-0.2-CAN	1004320150	B.27

Type	Order No.	Page
SAIL-M8GM8G-4S-0.2-CAN	1216820020	C.64
SAIL-M8GM8G-4S-0.25-CAN	1004330150	B.16
SAIL-M8GM8G-4S-0.25-CAN	1216820025	C.64
SAIL-M8GM8G-4S-0.3-CAN	1005270150	B.37
SAIL-M8GM8G-4S-0.3-CAN	1216820030	C.64
SAIL-M8GM8G-4S-0.3Ω-SB	1981900030	C.65
SAIL-M8GM8G-4S-0.5-CAN	1005460150	B.37
SAIL-M8GM8G-4S-0.5-CAN	1058530150	C.6
SAIL-M8GM8G-4S-0.5-CAN	1216820050	C.64
SAIL-M8GM8G-4S-0.8-CAN	1058540150	C.6
SAIL-M8GM8G-4S-0.8-CAN	1216820080	C.64
SAIL-M8GM8G-4S-0.8-CAN	1006920000	F.39
SAIL-M8GM8G-4S-1.0-CAN	1216820100	C.64
SAIL-M8GM8G-4S-1.0-CAN	1058570150	C.7
SAIL-M8GM8G-4S-1.0-CAN	1006930000	F.38
SAIL-M8GM8G-4S-1.0Ω-SB	1981900100	C.65
SAIL-M8GM8G-4S-1.5-CAN	1216820150	C.64
SAIL-M8GM8G-4S-1.5-CAN	1058630000	C.66
SAIL-M8GM8G-4S-1.5-CAN	1006940000	F.38
SAIL-M8GM8G-4S-1.5U-SB	1981900150	C.65
SAIL-M8GM8G-4S-10-CAN	1279480300	C.10
SAIL-M8GM8G-4S-10-CAN	1279490050	C.10
SAIL-M8GM8G-4S-10-CAN	1279490300	C.10
SAIL-M8GM8G-4S-10-CAN	1216821000	C.64
SAIL-M8GM8G-4S-10-CAN	1059340015	C.73
SAIL-M8GM8G-4S-10-CAN	1059340030	C.73
SAIL-M8GM8G-4S-10-CAN	1010070000	D.21
SAIL-M8GM8G-4S-10-CAN	1010080000	D.21
SAIL-M8GM8G-4S-10-CAN	1010090000	D.21
SAIL-M8GM8G-4S-10-CAN	1222270050	D.38
SAIL-M8GM8G-4S-10-CAN	1223650050	D.38
SAIL-M8GM8G-4S-10Ω-SB	1981901000	C.65
SAIL-M8GM8G-4S-15Ω-SB	1981901500	C.65
SAIL-M8GM8G-4S-20Ω-SB	1981902000	C.65
SAIL-M8GM8G-4S-3.0-CAN	1216820300	C.64
SAIL-M8GM8G-4S-3.0-CAN	1059330015	C.69
SAIL-M8GM8G-4S-3.0-CAN	1006980000	F.36
SAIL-M8GM8G-4S-3.0Ω-SB	1981900300	C.65
SAIL-M8GM8G-4S-3.5-CAN	1007000150	B.16
SAIL-M8GM8G-4S-3.5-CAN	1216820350	C.64
SAIL-M8GM8G-4S-3.5-CAN	1059330030	C.69
SAIL-M8GM8G-4S-5.0-CAN	1216820500	C.64
SAIL-M8GM8G-4S-5.0-CAN	1059330050	C.69
SAIL-M8GM8G-4S-5.0-CAN	1009370000	D.29
SAIL-M8GM8G-4S-5.0Ω-SB	1981900500	C.65
SAIL-M8GM8G-4S-7.0-CAN	1216820700	C.64
SAIL-M8GM8G-4S-7.0-CAN	1059330100	C.69
SAIL-M8GM8G-4S-7.0-CAN	1010060000	D.21
SAIL-M8GM8GR-3-1.5U	1948470150	B.33
SAIL-M8GM8GR-3-1.5V	1948650150	B.33
SAIL-M8GM8GR-4-1.5U	1948500150	B.33
SAIL-M8GM8GR-4-1.5V	1948680150	B.33
SAIL-M8GM8SG-4S0.1UIE	1160930010	C.68
SAIL-M8GM8SG-4S0.3UIE	1160930030	C.68
SAIL-M8GM8SG-4S0.5UIE	1160930050	C.68
SAIL-M8GM8SG-4S1.0UIE	1160930100	C.68
SAIL-M8GM8SG-4S15UIE	1160931500	C.68
SAIL-M8GM8SG-4S2.0UIE	1160930200	C.68
SAIL-M8GM8SG-4S20UIE	1160932000	C.68
SAIL-M8GM8SG-4S3.0UIE	1160930300	C.68
SAIL-M8GM8SG-4S30UIE	1160933000	C.68
SAIL-M8GM8SG-4S4.0UIE	1160930400	C.68
SAIL-M8GM8SG-4S40UIE	1160934000	C.68
SAIL-M8GM8SG-4S5.0UIE	1160930500	C.68
SAIL-M8GM8SG-4S50UIE	1160935000	C.68
SAIL-M8GM8SG-4S7.5UIE	1160930750	C.68
SAIL-M8GM8W-3-1.5U	1824580150	B.32
SAIL-M8GM8W-3-1.5V	1927170150	B.32
SAIL-M8GM8W-3-1.5V	1927170150	B.5
SAIL-M8GM8W-3-10U	1824581000	B.5
SAIL-M8GM8W-3-10V	1927171000	B.5
SAIL-M8GM8W-3-3.0U	1824580300	B.5
SAIL-M8GM8W-3-3.0V	1927170300	B.5
SAIL-M8GM8W-3-5.0U	1824580500	B.5
SAIL-M8GM8W-3-5.0V	1927170500	B.5
SAIL-M8GM8W-3-X.XU	1824580000	B.5
SAIL-M8GM8W-3-X.XV	1927170000	B.5
SAIL-M8GM8W-3L1.5U	1877250150	B.34
SAIL-M8GM8W-3L1.5V	1927190150	B.34
SAIL-M8GM8W-3L1.5V	1927190150	B.5
SAIL-M8GM8W-3L10U	1877251000	B.5
SAIL-M8GM8W-3L10V	1927191000	B.5
SAIL-M8GM8W-3L3.0U	1877250300	B.5
SAIL-M8GM8W-3L3.0V	1927190300	B.5
SAIL-M8GM8W-3L5.0U	1877250500	B.5
SAIL-M8GM8W-3L5.0V	1927190500	B.5
SAIL-M8GM8W-3LX.XU	1877250000	B.5
SAIL-M8GM8W-3LX.XV	1927190000	B.5
SAIL-M8GM8W-4-1.5U	1857660150	B.32
SAIL-M8GM8W-4-1.5V	1927180150	B.32
SAIL-M8GM8W-4-1.5V	1927180150	B.5
SAIL-M8GM8W-4-10U	1857661000	B.5
SAIL-M8GM8W-4-10V	1927181000	B.5
SAIL-M8GM8W-4-3.0U	1857660300	B.5
SAIL-M8GM8W-4-3.0V	1927180300	B.5
SAIL-M8GM8W-4-5.0U	1857660500	B.5
SAIL-M8GM8W-4-5.0V	1927180500	B.5
SAIL-M8GM8W-4-X.XU	1857660000	B.5
SAIL-M8GM8W-4-X.XV	1927180000	B.5

Type	Order No.	Page
SAIL-M8GM8W-4L1.5U	1906450150	B.34
SAIL-M8GM8W-4L1.5V	1927200150	B.34
SAIL-M8GM8WR-3-1.5U	1948480150	B.33
SAIL-M8GM8WR-3-1.5V	1948660150	B.33
SAIL-M8GM8WR-4-1.5U	1948510150	B.33
SAIL-M8GM8WR-4-1.5V	1948690150	B.33
SAIL-M8GRJ45-4S10UIE	1201211000	C.68
SAIL-M8GRJ45-4S2.0UIE	1201210200	C.68
SAIL-M8GRJ45-4S5.0UIE	1201210500	C.68
SAIL-M8GRJ45-4S7.5UIE	1201210750	C.68
SAIL-M8W-3-1.5U	1857550150	B.19
SAIL-M8W-3-1.5V	1927310150	B.19
SAIL-M8W-3-1.5V	1927310150	B.4
SAIL-M8W-3-10U	1857551000	B.4
SAIL-M8W-3-10V	1927311000	B.4
SAIL-M8W-3-3.0U	1857550300	B.4
SAIL-M8W-3-3.0V	1927310300	B.4
SAIL-M8W-3-5.0U	1857550500	B.4
SAIL-M8W-3-5.0V	1927310500	B.4
SAIL-M8W-3-X.XU	1857550000	B.4
SAIL-M8W-3-X.XV	1927310000	B.4
SAIL-M8W-3S1.5U	1906580150	B.22
SAIL-M8W-4-1.5U	1857560150	B.19
SAIL-M8W-4-1.5V	1927330150	B.19
SAIL-M8W-4-1.5V	1927330150	B.4
SAIL-M8W-4-10U	1857561000	B.4
SAIL-M8W-4-10V	1927331000	B.4
SAIL-M8W-4-3.0U	1857560300	B.4
SAIL-M8W-4-3.0V	1927330300	B.4
SAIL-M8W-4-5.0U	1857560500	B.4
SAIL-M8W-4-5.0V	1927330500	B.4
SAIL-M8W-4-X.XU	1857560000	B.4
SAIL-M8W-4-X.XV	1927330000	B.4
SAIL-M8W-4S1.5U	1906590150	B.22
SAIL-M8WM12W-3-1.5U	1937970150	B.7
SAIL-M8WM12W-3-1.5V	1938250150	B.7
SAIL-M8WM12W-3-10U	1937971000	B.7
SAIL-M8WM12W-3-10V	1938251000	B.7
SAIL-M8WM12W-3-3.0U	1937970300	B.7
SAIL-M8WM12W-3-3.0V	1938250300	B.7
SAIL-M8WM12W-3-5.0U	1937970500	B.7
SAIL-M8WM12W-3-5.0V	1938250500	B.7
SAIL-M8WM12W-3-X.XU	1937970000	B.7
SAIL-M8WM12W-3-X.XV	1938250000	B.7
SAIL-M8WM12W-4-1.5U	1938000150	B.7
SAIL-M8WM12W-4-1.5V	1938280150	B.7
SAIL-M8WM12W-4-10U	1938001000	B.7
SAIL-M8WM12W-4-10V	1938281000	B.7
SAIL-M8WM12W-4-3.0U	1938000300	B.7
SAIL-M8WM12W-4-3.0V	1938280300	B.7
SAIL-M8WM12W-4-5.0U	1938000500	B.7
SAIL-M8WM12W-4-5.0V	1938280500	B.7
SAIL-M8WM12W-4-X.XU	1938000000	B.7
SAIL-M8WM12W-4-X.XV	1938280000	B.7
SAIL-M8WM12W-4-X.XV	1938668000	F.4
SAIL-M8WM8W-3-1.5U	1857670150	B.32
SAIL-M8WM8W-3-1.5V	1927210150	B.32
SAIL-M8WM8W-3-1.5V	1927210150	B.5
SAIL-M8WM8W-3-10U	1857671000	B.5
SAIL-M8WM8W-3-10V	1927211000	B.5
SAIL-M8WM8W-3-3.0U	1857670300	B.5
SAIL-M8WM8W-3-3.0V	1927210300	B.5
SAIL-M8WM8W-3-5.0U	1857670500	B.5
SAIL-M8WM8W-3-5.0V	1927210500	B.5
SAIL-M8WM8W-3-X.XU	1857670000	B.5
SAIL-M8WM8W-3-X.XV	1927210000	B.5
SAIL-M8WM8W-4-1.5U	1857680150	B.32
SAIL-M8WM8W-4-1.5V	1927220150	B.32
SAIL-M8WM8W-4-1.5V	1927220150	B.5
SAIL-M8WM8W-4-10U	1857681000	B.5
SAIL-M8WM8W-4-10V	1927221000	B.5
SAIL-M8WM8W-4-3.0U	1857680300	B.5
SAIL-M8WM8W-4-3.0V	1927220300	B.5
SAIL-M8WM8W-4-5.0U	1857680500	B.5
SAIL-M8WM8W-4-5.0V	1927220500	B.5
SAIL-M8WM8W-4-X.XU	1857680000	B.5
SAIL-M8WM8W-4-X.XV	1927220000	B.5
SAIL-M8WM8WR-3-1.5U	1948490150	B.33
SAIL-M8WM8WR-3-1.5V	1948670150	B.33
SAIL-M8WM8WR-4-1.5U	1948520150	B.33
SAIL-M8WM8WR-4-1.5V	1948700150	B.33
SAIL-VSA-1.5U	9457710150	B.47
SAIL-VSA-1.5U(0.5)	1845120150	B.51
SAIL-VSA-M12G-1.5U	9457040000	B.47
SAIL-VSA-M12W-1.5U	1857690150	B.47
SAIL-VSA-M8G-3-1.5U	1099760150	B.53
SAIL-VSB-1.5U	9457930150	B.48
SAIL-VSB-1.5U(0.5)	1845140150	B.52
SAIL-VSB-M12G-1.5U	9457680150	B.48
SAIL-VSB-M12W-1.5U	1857700150	B.48
SAIL-VSB-M8G-3-0.15U	1271590015	B.54
SAIL-VSBD-1.5U	9456070150	B.48
SAIL-VSBD-1.5U(0.5)	1845160150	B.52
SAIL-VSBD-M12G-1.5U	9457780150	B.48
SAIL-VSBD-M12W-1.5U	1857710150	B.48
SAIL-VSBD-M8G-3-1.5U	1099770150	B.54
SAIL-VSBD180-M8G-3-1.5U	1276450150	B.54
SAIL-VSC-1.5U	9457920150	B.49
SAIL-VSC-M12G-1.5U	9457400150	B.49

Type	Order No.	Page
SAIL-VSC-M12W-1.5U	1857720150	B.49
SAIL-VSC-M8G-0.15U	1309680015	B.55
SAIL-VSCD-1.5U	9456240150	B.49
SAIL-VSCD-M12G-1.5U	9456170150	B.49
SAIL-VSCD-M12W-1.5U	1857730150	B.49
SAIL-VSCD-M8G-3-1.5U	1916700150	B.55
SAIL-ZW-3-1.5U	1964310150	B.18
SAIL-ZW-M12BG-2/4-1.5U	1812550150	B.38
SAIL-ZW-M12BW-2/4-1.5U	1964280150	B.38
SAIL-ZW-M12BW-2/4L1.5U	1964290150	B.38
SAIL-ZW-M12BW-3L1.5U	1912110150	B.37
SAIL-ZW-M8BG-3-1.5UGE	1093250150	B.39
SAIL-ZW-M8BG-3-1.5U	9457490150	B.39
SAIL-ZW-M8BW-3-1.5UGE	1093260150	B.39
SAIL-ZW-M8BW-3-1.5U	1964300150	B.39
SAIL-ZW-M8BW-3L1.5U	9457410150	B.39
SAIP-M12BG-3-1.5U	1108730150	B.12
SAIP-M12BG-4-1.5U	1108740150	B.12
SAIP-M12BG-5-1.5U	1108750150	B.12
SAIP-M12BW-3-1.5U	1108770150	B.12
SAIP-M12BW-4-1.5U	1108780150	B.12
SAIP-M12BW-5-1.5U	1108790150	B.12
SAIP-M12G-3-1.5U	1108800150	B.12
SAIP-M12G-4-1.5U	1108810150	B.12
SAIP-M12G-5-1.5U	1108820150	B.12
SAIP-M12W-3-1.5U	1108670150	B.12
SAIP-M12W-4-1.5U	1108680150	B.12
SAIP-M12W-5-1.5U	1108690150	B.12
SAIS 5/9-VA	1920700000	C.31
SAIS 5/9-VA	1920700000	D.12
SAIS 5/9-VA	1920700000	I.31
SAIS 5/9-VA D-COD	1920700001	C.78
SAIS 5/9-VA-B-COD	1920720000	C.11
SAIS 5/9-VA-B-COD	1920720000	D.12
SAIS 5/9-VA-B-COD	1920720000	I.31
SAIS-12/9-(TL)	1924950000	D.11
SAIS-12/9-(TL)	1924950000	D.5
SAIS-3-IDC (0,75) M12	1852720000	D.25
SAIS-3-IDC M8 small	1784040001	D.26
SAIS-3-IDC-M12B-COD	1864730000	C.13
SAIS-3-IDC-M12B-COD	1864730000	D.16
SAIS-3/7	1021470000	D.5
SAIS-3/9	1021480000	D.5
SAIS-4-IDC (0,75) M12	1852740000	D.25
SAIS-4-IDC M12 small	1781550001	D.24
SAIS-4-IDC M8 small	1784060001	D.26
SAIS-4/11-1.5	1353700000	D.9
SAIS-4/7	9457550000	D.5
SAIS-4/7	9457550000	D.7
SAIS-4/7-(KV)	1921060000	D.10
SAIS-4/9	1807340000	D.7
SAIS-4/9-7/8"	1808840000	E.6
SAIS-5/11-1.5	1353740000	D.9
SAIS-5/11-7/8"	1291970000	E.7
SAIS-5/7	9456940000	D.5
SAIS-5/7	9456940000	D.8
SAIS-5/7-(KV)	1921050000	D.10
SAIS-5/7-ZF	1906390000	D.19
SAIS-5/7-ZF	1906390000	D.5
SAIS-5/9	1807350000	D.8
SAIS-5/9-7/8"	1301220000	E.6
SAIS-8/9	1836970000	D.8
SAIS-M-5/8S M12 5P A-COD	1784740000	C.32
SAIS-M-5/8S M12 5P A-COD	1784740000	D.15
SAIS-M16-2/9	1321700000	D.27
SAIS-M16-4/9	1117970000	D.27
SAIS-M16-5/9	1117990000	D.27
SAIS-M16-6/9	1304390000	D.27
SAIS-M16-7/9	1118010000	D.27
SAIS-M16-8/9	1304430000	D.27
SAIS-M23-12P-AN-1,0M	1906290100	J.30
SAIS-M23-12P-ST-1,0M	1906280100	J.30
SAIS-M23-19P-ST-1,0M	1818160100	J.30
SAIS-M8-3P	1803860000	D.20
SAIS-M8-4P	1803850000	D.20
SAIS-ZW-5	9457540000	D.30
SAIS-ZWW	1837560000	D.30
SAISM 5/8S M12 5P B-COD	1784790000	C.12
SAISM 5/8S M12 5P B-COD	1784790000	D.16
SAISM-4/8S-M12 4P D-ZF	1892120001	D.18
SAISM-4/8S-M12-4P D-COD	1892120000	C.77
SAISM-4/8S-M12-4P D-COD	1892120000	D.16
SAISM-5/6S M12 5P A-COD	1191030000	D.5
SAISM-8/11S-M12	1118910000	D.14
SAISM-8/9S-M12	1258940000	D.14
SAISM-M8-3P(TL)	1921030000	D.21
SAISM-M8-3P(TL)	1921030000	D.6
SAISM-M8-4P(TL)	1921040000	D.21
SAISM-M8-4P(TL)	1921040000	D.6
SAISW- 5/9	1807370000	D.8
SAISW-3/7	1021280000	D.5
SAISW-3/9	1021290000	D.7
SAISW-4-IDC M12	1812870000	D.24
SAISW-4/11-7/8"	1292040000	E.7
SAISW-4/7	9457290000	D.5
SAISW-4/7	9457290000	D.7
SAISW-4/7-(KV)	1962620000	D.10
SAISW-4/8S-M12 4P D-ZF	1803930001	D.18
SAISW-4/8S-M12-4P D-COD	1160550000	C.77

Type	Order No.	Page
SAISW-4/9	1807360000	D.7
SAISW-4/9-7/8"	1808830000	E.6
SAISW-5/11-7/8"	1291990000	E.7
SAISW-5/7	9456950000	D.5
SAISW-5/7	9456950000	D.8
SAISW-5/7-(KV)	1962610000	D.10
SAISW-5/9-7/8"	1291980000	E.6
SAISW-M-4/8 M12	1803930000	C.32
SAISW-M-4/8 M12	1803930000	D.15
SAISW-M-5/8 M12	1803940000	C.32
SAISW-M-5/8 M12	1803940000	D.15
SAISW-M-5/8 M12 B-COD	1944570000	C.12
SAISW-M-5/8 M12 B-COD	1944570000	D.17
SAISW-M-5/8 M12 B-COD	1944570000	D.5
SAISW-M8-3P(TL)	1920990000	D.22
SAISW-M8-3P(TL)	1920990000	D.6
SAISW-M8-4P(TL)	1921000000	D.22
SAISW-M8-4P(TL)	1921000000	D.6
SAIV-M12BG-2/4-1.5U	1939410150	B.13
SAIV-M12BG-4-1.5U	9457950150	B.13
SAIV-M12BW-2/4-1.5U	1939370150	B.13
SAIV-M12BW-4-1.5U	9457960150	B.13
Screwty M12 K0 o. SD	1900100000	K.5
Screwty M12f K0 o. SD	1900120000	K.5
Screwty M23	1981560000	K.5
Screwty M8 K0 o. SD	1900110000	K.5
Screwty M8F K0 o. SD	1900130000	K.5
Screwty Set	1910000000	K.5
Screwty Set -DM	1920000000	K.5
Screwty- M12	1900000000	K.5
Screwty- M12 F	1900020000	K.5
Screwty- M8	1900010000	K.5
Screwty- M8 F	1900030000	K.5
Screwty-M12 F-DM	1900021000	K.5
Screwty-M12-DM	1900001000	H.7
Screwty-M12-DM	1900001000	I.27
Screwty-M12-DM	1900001000	K.5
Screwty-M8 F-DM	1900031000	K.5
Screwty-M8-DM	1900011000	K.5
SFC 0/12 NEUTRAL BL	1813170000	K.14
SFC 0/12 NEUTRAL GE	1813160000	K.14
SFC 0/12 NEUTRAL RT	1813150000	K.14
SFC 0/12 NEUTRAL WS	1813130000	K.14
SFC 0/21 NEUTRAL BL	1813220000	K.14
SFC 0/21 NEUTRAL GE	1813210000	K.14
SFC 0/21 NEUTRAL RT	1813200000	K.14
SFC 0/21 NEUTRAL WS	1813190000	K.14
SFC 0/30 NEUTRAL BL	1813270000	K.14
SFC 0/30 NEUTRAL GE	1813260000	K.14
SFC 0/30 NEUTRAL RT	1813250000	K.14
SFC 0/30 NEUTRAL WS	1813240000	K.14
SFC 1/12 NEUTRAL BL	1747320002	K.14
SFC 1/12 NEUTRAL GE	1747320004	K.14
SFC 1/12 NEUTRAL RT	1747320003	K.14
SFC 1/12 NEUTRAL WS	1747320001	K.14
SFC 1/21 NEUTRAL BL	1779080002	K.14
SFC 1/21 NEUTRAL GE	1779080004	K.14
SFC 1/21 NEUTRAL RT	1779080003	K.14
SFC 1/21 NEUTRAL WS	1779080001	K.14
SFC 1/30 NEUTRAL BL	1805720000	K.14
SFC 1/30 NEUTRAL GE	1805730000	K.14
SFC 1/30 NEUTRAL RT	1805740000	K.14
SFC 1/30 NEUTRAL WS	1805760000	K.14
SFC 2.5/12 MC NE BL	1062030000	K.14
SFC 2.5/12 MC NE GE	1062010000	K.14
SFC 2.5/12 MC NE RT	1062020000	K.14
SFC 2.5/12 MC NE WS	1062000000	K.14
SFC 2.5/12 MC SDR	1062040000	K.14
SFC 2.5/21 MC NE BL	1062090000	K.14
SFC 2.5/21 MC NE GE	1062070000	K.14
SFC 2.5/21 MC NE RT	1062080000	K.14
SFC 2.5/21 MC NE WS	1062050000	K.14
SFC 2.5/21 MC SDR	1062110000	K.14
SFC 2/12 NEUTRAL BL	1758320002	K.14
SFC 2/12 NEUTRAL GE	1758320004	K.14
SFC 2/12 NEUTRAL RT	1758320003	K.14
SFC 2/12 NEUTRAL WS	1758320001	K.14
SFC 2/21 NEUTRAL BL	1805770000	K.14
SFC 2/21 NEUTRAL GE	1805780000	K.14
SFC 2/21 NEUTRAL RT	1805790000	K.14
SFC 2/21 NEUTRAL WS	1805810000	K.14
SFC 2/30 NEUTRAL BL	1805820000	K.14
SFC 2/30 NEUTRAL GE	1805830000	K.14
SFC 2/30 NEUTRAL RT	1805850000	K.14
SFC 2/30 NEUTRAL WS	1805870000	K.14
SFC 3/12 MC NE BL	1025250000	K.14
SFC 3/12 MC NE GE	1025230000	K.14
SFC 3/12 MC NE RT	1025240000	K.14
SFC 3/12 MC NE WS	1025220000	K.14
SFC 3/12 MC SDR	1025550000	K.14
SFC 3/21 MC NE BL	1025300000	K.14
SFC 3/21 MC NE GE	1025270000	K.14
SFC 3/21 MC NE RT	1025290000	K.14
SFC 3/21 MC NE WS	1025260000	K.14
SFC 3/21 MC SDR	1025560000	K.14
SFC 3/30 MC NE BL	1025340000	K.14
SFC 3/30 MC NE GE	1025320000	K.14
SFC 3/30 MC NE RT	1025330000	K.14
SFC 3/30 MC NE WS	1025310000	K.14

Type	Order No.	Page
SFC 3/30 MC SDR	1025570000	K.14
SIBL GH SAI	1966200000	G.13
SIBL GH SAI	1966200000	G.6
STRIPAX	9005000000	K.9
STRIPAX ZERT	9017330000	K.9
STRIPPER 6-16 RED-LINE	9203110000	K.8

T

TM 203/18 V0	1798480000	K.15
TM 4/12 HF/HB	1719840000	C.69
TM 4/18 HF/HB	1719850000	C.69
TM-I 12 NEUTRAL GE	1718411687	C.69
TM-I 18 NEUTRAL GE	1718431687	C.69
TM-I 18 NEUTRAL WS	1718431044	K.15

V

VG M16 - MS 1/EMV	1909500000	C.81
VG M16-1/K68	1909860000	C.81
VG M16-1/MS68	1909910000	C.81
VG M16-EXE MS	1737210000	C.81
VP M16-EXE SW	1737070000	C.81
VP M16-MS65	1777730000	C.81
VT SF 5/21 NEUTRAL WS V0	1689470001	C.69
VT SF 6/21 NEUTRAL WS V0	1730560001	C.69

W

WK-1/4"(Screwty)	1862200000	K.5
WS 10/5 MC BEDRUCKT	1635010000	K.16
WS 10/5 MC NEUTRAL	1635000000	K.16
WS 15/5 MC BEDRUCKT	1609890000	K.16
WS 15/5 MC NEUTRAL	1609880000	K.16

Order No.	Type	Page

1000000000

1001180001	SAI-T-5S-PARA	K.15
1004310150	SAI-T-5-M12/M12 B-COD	B.27
1004320150	SAIL-M8GM8G-4S-0.2-CAN	B.27
1004330150	SAIL-M8GM8G-4S-0.25-CAN	B.16
1005270150	SAIL-M8GM8G-4S-0.3-CAN	B.37
1005460150	SAIL-M8GM8G-4S-0.5-CAN	B.37
1006920000	SAIL-M8GM8G-4S-0.8-CAN	F.39
1006930000	SAIL-M8GM8G-4S-1.0-CAN	F.38
1006940000	SAIL-M8GM8G-4S-1.5-CAN	F.38
1006980000	SAIL-M8GM8G-4S-3.0-CAN	F.36
1007000150	SAIL-M8GM8G-4S-3.5-CAN	B.16
1009370000	SAIL-M8GM8G-4S-5.0-CAN	D.29

1010000000

1010060000	SAIL-M8GM8G-4S-7.0-CAN	D.21
1010070000	SAIL-M8GM8G-4S-10-CAN	D.21
1010080000	SAIL-M8GM8G-4S-10-CAN	D.21
1010090000	SAIL-M8GM8G-4S-10-CAN	D.21
1010840015	SAIL-M12WM12W-3-X.XU	C.74
1010840030	SAIL-M12WM12G-3-X.XU	C.74
1010840050	SAIB-3/7	C.74
1010840100	IE-C5DB4RE0100MCSXXX-X	C.74
1010850015	IE-C5DB4RE0015MCSMCS-E	C.73
1010850030	IE-C5DB4RE0030MCSMCS-E	C.73
1010850050	IE-C5DB4RE0050MCSMCS-E	C.73
1010850100	IE-C5DB4RE0100MCSMCS-E	C.73
1011970150	SAIL-M12GM12G-5-1.5T	B.25
1011990150	SAIL-M12GM12W-5-1.5T	B.25

1020000000

1020930150	SAIL-M12GM12W-4-3LW1.5T	B.27
1021280000	SAISW-3/7	D.5
1021290000	SAISW-3/9	D.7
1021310000	SAIBW-3/7	D.5
1021320000	SAIBW-3/9	D.7
1021470000	SAIS-3/7	D.5
1021480000	SAIS-3/9	D.5
1021490000	SAIB-3/7	D.7
1021510000	SAIB-3/9	D.5
1021650150	SAIL-M12G-5-1.5T	B.11
1021660150	SAIL-M12W-5-1.5T	B.11
1021670150	SAIL-M12BG-5-1.5T	B.11
1021690150	SAIL-M12BW-5-1.5T	B.11
1021710150	SAIL-M12GM12G-3-1.5T	B.25
1021720150	SAIL-M12GM12W-3-1.5T	B.25
1021730150	SAIL-M12GM12G-4-1.5T	B.25
1021740150	SAIL-M12GM12W-4-1.5T	B.25
1021750150	SAIL-M12G-3-1.5T	B.11
1021760150	SAIL-M12W-3-1.5T	B.11
1021770150	SAIL-M12G-4-1.5T	B.11
1021790150	SAIL-M12W-4-1.5T	B.11
1024050000	PRINTJET PRO 115V	K.15
1024140000	PJ PRO TNAW	K.15
1024310000	SAI-AU M8 PB GW 16DI	F.22
1025220000	SFC 3/12 MC NE WS	K.14
1025230000	SFC 3/12 MC NE GE	K.14
1025240000	SFC 3/12 MC NE RT	K.14
1025250000	SFC 3/12 MC NE BL	K.14
1025260000	SFC 3/21 MC NE WS	K.14
1025270000	SFC 3/21 MC NE GE	K.14
1025290000	SFC 3/21 MC NE RT	K.14
1025300000	SFC 3/21 MC NE BL	K.14
1025310000	SFC 3/30 MC NE WS	K.14
1025320000	SFC 3/30 MC NE GE	K.14
1025330000	SFC 3/30 MC NE RT	K.14
1025340000	SFC 3/30 MC NE BL	K.14
1025550000	SFC 3/12 MC SDR	K.14
1025560000	SFC 3/21 MC SDR	K.14
1025570000	SFC 3/30 MC SDR	K.14
1025940015	IE-C5DD4UG0015MCSXXX-X	C.70
1025940030	IE-C5DD4UG0030MCSXXX-X	C.70
1025940050	IE-C5DD4UG0050MCSXXX-X	C.70
1025940100	IE-C5DD4UG0100MCSXXX-X	C.70
1025950005	IE-C5DD4UG0005MCSMCS-E	C.69
1025950015	IE-C5DD4UG0015MCSMCS-E	C.69
1025950030	IE-C5DD4UG0030MCSMCS-E	C.69
1025950050	IE-C5DD4UG0050MCSMCS-E	C.69
1025950100	IE-C5DD4UG0100MCSMCS-E	C.69
1026090000	SAI-ASI T FF small	C.61
1027040000	PJ PRO TNTK INK K	K.15
1027050000	PJ PRO TNTK INK C	K.15
1027060000	PJ PRO TNTK INK M	K.15
1027070000	PJ PRO TNTK INK Y	K.15
1027110000	PJ PRO TINTENSET FARBE	K.15

1040000000

1044470010	IE-C5DD4UG0010MCSA20-E	C.70
1044470015	IE-C5DD4UG0015MCSA20-E	C.70
1044470030	IE-C5DD4UG0030MCSA20-E	C.70
1044470050	IE-C5DD4UG0050MCSA20-E	C.70
1044470100	IE-C5DD4UG0100MCSA20-E	C.70

Order No.	Type	Page

1050000000

1051760000	SAI-4-S 3P M8 L 0L	I.52
1057720000	SAI-6-S 3P M8 L SL	I.53
1057740150	SAIL-M12BG-3B-1.5U	B.43
1057750150	SAIL-M12BG-4B-1.5U	B.43
1057760150	SAIL-M12BW-5B-1.5U	B.43
1057770150	SAIL-M12G-3B-1.5U	B.43
1057780150	SAIL-M12G-4B-1.5U	B.43
1057790150	SAIL-M12G-5B-1.5U	B.43
1057800150	SAIL-M12W-3B-1.5U	B.43
1057810150	SAIL-M12W-4B-1.5U	B.43
1057820150	SAIL-M12W-5B-1.5U	B.43
1057830150	SAIL-M12GM12G-3B-1.5U	B.44
1057840150	SAIL-M12GM12G-4B-1.5U	B.44
1057850150	SAIL-M12GM12G-5B-1.5U	B.44
1057870150	SAIL-M12WM12G-3B-1.5U	B.44
1057880150	SAIL-M12WM12G-4B-1.5U	B.44
1057890150	SAIL-M12WM12G-5B-1.5U	B.44
1057900150	SAIL-M12GM12W-3B-1.5U	B.44
1057910150	SAIL-M12GM12W-4B-1.5U	B.44
1057920150	SAIL-M12GM12W-5B-1.5U	B.44
1057940000	SAI-T-5-M12/M12 B-COD	D.29
1058490150	SAIL-M12GM12G-3S1.5U	B.28
1058500150	SAIL-M12GM12G-4S1.5U	B.28
1058510150	SAIL-M12GM12G-5S1.5U	B.28
1058530150	SAIL-M8GM8G-4S-0.5-CAN	C.6
1058540150	SAIL-M8GM8G-4S-0.8-CAN	C.6
1058570150	SAIL-M8GM8G-4S-1.0-CAN	C.7
1058630000	SAIL-M8GM8G-4S-1.5-CAN	C.66
1059330015	SAIL-M8GM8G-4S-3.0-CAN	C.69
1059330030	SAIL-M8GM8G-4S-3.5-CAN	C.69
1059330050	SAIL-M8GM8G-4S-5.0-CAN	C.69
1059330100	SAIL-M8GM8G-4S-7.0-CAN	C.69
1059340015	SAIL-M8GM8G-4S-10-CAN	C.73
1059340030	SAIL-M8GM8G-4S-10-CAN	C.73
1059340050	IE-C5DB4RE0050MSSMCS-E	C.73
1059340100	IE-C5DB4RE0100MSSMCS-E	C.73
1059430000	SAI-8-M-4P M12 DIP	I.14
1059470150	SAIL-M12GM12W-3S1.5U	B.28
1059480150	SAIL-M12GM12W-4S1.5U	B.28
1059540150	SAIL-M12GM12W-5S1.5U	B.28
1059650150	SAIL-M12W-4S1.5U	B.17
1059720150	SAIL-M12WM12W-3S1.5U	B.28
1059730150	SAIL-M12WM12W-4S1.5U	B.28
1059740150	SAIL-M12WM12W-5S1.5U	B.28
1059750015	IE-C5DD4UG0015MCAXXX-X	C.72
1059750030	IE-C5DD4UG0030MCAXXX-X	C.72
1059750050	IE-C5DD4UG0050MCAXXX-X	C.72
1059750100	IE-C5DD4UG0100MCAXXX-X	C.72
1059770015	IE-C5DD4UG0015MCSMCA-E	C.71
1059770030	IE-C5DD4UG0030MCSMCA-E	C.71
1059770050	IE-C5DD4UG0050MCSMCA-E	C.71
1059770100	IE-C5DD4UG0100MCSMCA-E	C.71
1059890015	IE-C5DD4UG0015MCAMCA-E	C.71
1059890030	IE-C5DD4UG0030MCAMCA-E	C.71
1059890050	IE-C5DD4UG0050MCAMCA-E	C.71
1059890100	IE-C5DD4UG0100MCAMCA-E	C.71
1059900015	IE-C5DB4RE0015MCAXXX-X	C.76
1059900030	IE-C5DB4RE0030MCAXXX-X	C.76
1059900050	IE-C5DB4RE0050MCAXXX-X	C.76
1059900100	IE-C5DB4RE0100MCAXXX-X	C.76
1059940015	IE-C5DB4RE0015MCSMCA-E	C.75
1059940030	IE-C5DB4RE0030MCSMCA-E	C.75
1059940050	IE-C5DB4RE0050MCSMCA-E	C.75
1059940100	IE-C5DB4RE0100MCSMCA-E	C.75
1059970015	IE-C5DB4RE0015MCAMCA-E	C.75
1059970030	IE-C5DB4RE0030MCAMCA-E	C.75
1059970050	IE-C5DB4RE0050MCAMCA-E	C.75
1059970100	IE-C5DB4RE0100MCAMCA-E	C.75

1060000000

1060110150	SAIL-M12G-CD-1.5B	C.62
1060120150	SAIL-M12BG-CD-1.5B	C.62
1060130150	SAIL-M12GM12G-CD-1.5B	C.63
1060730000	SAI-Y-4S-M12/M12	D.28
1061880150	SAIL-M12BG-5B-1.5U	B.43
1061890150	SAIL-M12BW-3B-1.5U	B.43
1061900150	SAIL-M12BW-4B-1.5U	B.43
1061910150	SAIL-M12WM12W-3B-1.5U	B.44
1061920150	SAIL-M12WM12W-4B-1.5U	B.44
1061930150	SAIL-M12WM12W-5B-1.5U	B.44
1061970150	SAIL-M12W-PB-1.5D	C.6
1061980150	SAIL-M12BW-CD-1.5A	C.62
1061990150	SAIL-M12GM12W-CD-1.5A	C.63
1062000000	SFC 2.5/12 MC NE WS	K.14
1062010000	SFC 2.5/12 MC NE GE	K.14
1062020000	SFC 2.5/12 MC NE RT	K.14
1062030000	SFC 2.5/12 MC NE BL	K.14
1062040000	SFC 2.5/12 MC SDR	K.14
1062050000	SFC 2.5/21 MC NE WS	K.14
1062070000	SFC 2.5/21 MC NE GE	K.14
1062080000	SFC 2.5/21 MC NE RT	K.14
1062090000	SFC 2.5/21 MC NE BL	K.14
1062110000	SFC 2.5/21 MC SDR	K.14
1062150150	SAIL-M12WM12W-CD-1.5A	C.63
1062170150	SAIL-M12W-CD-1.5B	C.62
1062180150	SAIL-M12BW-CD-1.5B	C.62

Order No.	Type	Page

1062190150	SAIL-M12GM12W-CD-1.5B	C.63
1062210150	SAIL-M12WM12W-CD-1.5B	C.63
1062220150	SAIL-M12W-CD-1.5A	C.62
1062300150	SAIL-M12BW-PB-1.5D	C.6
1062310150	SAIL-M12GM12W-PB-1.5D	C.7
1062330150	SAIL-M12WM12W-PB-1.5D	C.7
1062340150	SAIL-M12W-PB-1.5E	C.6
1062370150	SAIL-M12BW-PB-1.5E	C.6
1062380150	SAIL-M12GM12W-PB-1.5E	C.7
1062400150	SAIL-M12WM12W-PB-1.5E	C.7

1070000000

1070630000	SAI-4-F 5P M12 L 5M	I.9
1070640000	SAI-4-F 5P M12 L 10M	I.9
1070650000	SAI-4-F 4P M12 L 5M	I.9
1070660000	SAI-4-F 4P M12 L 10M	I.9
1075390100	FBCEX PA M12 M-FMA 1M	C.29
1075410100	FBCEX PA M12 MA-FMA 1M	C.29
1075450100	FBCEX PA M12 MA-FM 1M	C.29
1075460100	FBC PA M12 MA-FM 1M	C.29
1075620100	FBC PA M12 M-FMA 1M	C.29
1076520100	FBCEX PA M12 FMA 1M	C.28
1076530100	FBC PA M12 FMA 1M	C.28
1076540100	FBC PA M12 MA 1M	C.28
1076550100	FBC PA M12 MA-FMA 1M	C.29
1076580100	FBCEX PA M12 MA 1M	C.28
1077750150	SAIL-M12G-4-1.5UGE	B.11
1078720000	SAIE-M8S-4-0.5U-FP-M8	D.36
1078730000	SAIE-M8S-3-0.5U-FP-M8	D.36

1090000000

1092910150	SAIL-M12BG-3-1.5UGE	B.11
1092920150	SAIL-M12BG-4-1.5UGE	B.11
1092930150	SAIL-M12BG-5-1.5UGE	B.11
1092940150	SAIL-M12BW-3-1.5UGE	B.11
1092950150	SAIL-M12BW-4-2L1.5UGE	B.16
1092960150	SAIL-M12BW-4-1.5UGE	B.11
1092970150	SAIL-M12BW-5-1.5UGE	B.11
1092980150	SAIL-M12G-3-1.5UGE	B.11
1092990150	SAIL-M12G-5-1.5UGE	B.11
1093000150	SAIL-M12GM12G-2/4-1.5UGE	B.26
1093010150	SAIL-M12GM12G-3-1.5UGE	B.25
1093020150	SAIL-M12GM12G-4-1.5UGE	B.25
1093030150	SAIL-M12GM12G-5-1.5UGE	B.25
1093040150	SAIL-M12GM12W-2/4-1.5UGE	B.26
1093050150	SAIL-M12GM12W-3-1.5UGE	B.25
1093060150	SAIL-M12GM12W-4-3LW1.5UGE	B.27
1093070150	SAIL-M12GM12W-4-1.5UGE	B.25
1093080150	SAIL-M12GM12W-5-1.5UGE	B.25
1093110150	SAIL-M12GM8W-3L1.5UGE	B.31
1093130150	SAIL-M12GM8W-4L1.5UGE	B.31
1093150150	SAIL-M12GM8WR-3-1.5UGE	B.30
1093160150	SAIL-M12W-3-1.5UGE	B.11
1093170150	SAIL-M12W-4-1.5UGE	B.11
1093180150	SAIL-M12W-5-1.5UGE	B.11
1093190150	SAIL-M8BG-3-1.5UGE	B.19
1093200150	SAIL-M8BG-4-1.5UGE	B.19
1093210150	SAIL-M8BW-3L1.5UGE	B.21
1093220150	SAIL-M8BW-3-1.5UGE	B.19
1093230150	SAIL-M8BW-4L1.5UGE	B.21
1093240150	SAIL-M8BW-4-1.5UGE	B.19
1093250150	SAIL-ZW-M8BG-3-1.5UGE	B.39
1093260150	SAIL-ZW-M8BW-3-1.5UGE	B.39
1099760150	SAIL-VSA-M8G-3-1.5U	B.53
1099770150	SAIL-VSBD-M8G-3-1.5U	B.54

1100000000

1104470150	SAIL-M8GM8G-3-1.5UGE	B.32
1108670150	SAIP-M12W-3-1.5U	B.12
1108680150	SAIP-M12W-4-1.5U	B.12
1108690150	SAIP-M12W-5-1.5U	B.12
1108730150	SAIP-M12BG-3-1.5U	B.12
1108740150	SAIP-M12BG-4-1.5U	B.12
1108750150	SAIP-M12BG-5-1.5U	B.12
1108770150	SAIP-M12BW-3-1.5U	B.12
1108780150	SAIP-M12BW-4-1.5U	B.12
1108790150	SAIP-M12BW-5-1.5U	B.12
1108800150	SAIP-M12G-3-1.5U	B.12
1108810150	SAIP-M12G-4-1.5U	B.12
1108820150	SAIP-M12G-5-1.5U	B.12

1110000000

1114880150	SAIL-M12BW-3L1.5UGE	B.16
1117970000	SAIS-M16-4/9	D.27
1117990000	SAIS-M16-5/9	D.27
1118010000	SAIS-M16-7/9	D.27
1118910000	SAISM-8/11S-M12	D.14
1118920000	SAIBM-8/11S-M12	D.14
1119030000	ERME 10² SPX 4	K.9

1130000000

1139330000	SAIBW-4/8S-M12 4P D-ZF	D.18

Order No.	Type	Page

1140000000

1140640000	PB-DP SUB-D M12 TERM PS	C.17
1140650000	PB-DP SUB-D M12 TERM	C.16

1160000000

1160550000	SAISW-4/8S-M12-4P D-COD	C.77
1160820010	SAIL-M8G-4S0.1UIE	C.68
1160820030	SAIL-M8G-4S0.3UIE	C.68
1160820050	SAIL-M8G-4S0.5UIE	C.68
1160820100	SAIL-M8G-4S1.0UIE	C.68
1160820200	SAIL-M8G-4S2.0UIE	C.68
1160820300	SAIL-M8G-4S3.0UIE	C.68
1160820400	SAIL-M8G-4S4.0UIE	C.68
1160820500	SAIL-M8G-4S5.0UIE	C.68
1160820750	SAIL-M8G-4S7.5UIE	C.68
1160821000	SAIL-M8G-4S10UIE	C.68
1160930010	SAIL-M8GM8SG-4S0.1UIE	C.68
1160930030	SAIL-M8GM8SG-4S0.3UIE	C.68
1160930050	SAIL-M8GM8SG-4S0.5UIE	C.68
1160930100	SAIL-M8GM8SG-4S1.0UIE	C.68
1160930200	SAIL-M8GM8SG-4S2.0UIE	C.68
1160930300	SAIL-M8GM8SG-4S3.0UIE	C.68
1160930400	SAIL-M8GM8SG-4S4.0UIE	C.68
1160930500	SAIL-M8GM8SG-4S5.0UIE	C.68
1160930750	SAIL-M8GM8SG-4S7.5UIE	C.68
1160931500	SAIL-M8GM8SG-4S15UIE	C.68
1160932000	SAIL-M8GM8SG-4S20UIE	C.68
1160933000	SAIL-M8GM8SG-4S30UIE	C.68
1160934000	SAIL-M8GM8SG-4S40UIE	C.68
1160935000	SAIL-M8GM8SG-4S50UIE	C.68
1161870000	PB-DP SUB-D ZF TERM	C.21
1161880000	PB-DP SUB-D ZF TERM PS	C.21
1161890000	PB-DP SUB-D ZF	C.20
1169900000	SAI-M23-KS-7/12	J.12
1169920000	SAI-M23-GS-S-7/12	J.12
1169930000	SAIL-M23-KSW-7/12	J.12
1169940000	SAIE-M23-S-VW	J.13
1169950000	SAIE-M23-S-RM	J.13
1169970000	SAIE-M23-S-EM	J.13
1169980000	SAIE-M23-S-W	J.13
1169990000	SAIE-M23-S-HW	J.13

1170000000

1170000000	SAI-M23-SE-6	J.14
1170020000	SAI-M23-BE-6	J.14
1170030000	SAI-M23-SE-7	J.14
1170040000	SAI-M23-BE-7	J.14
1170050000	SAI-M23-SE-9	J.14
1170060000	SAI-M23-BE-9	J.14
1170070000	SAI-M23-SE-12	J.14
1170080000	SAI-M23-SE-16	J.15
1170090000	SAI-M23-BE-16	J.15
1170100000	SAI-M23-SE-17	J.15
1170110000	SAI-M23-BE-17	J.15
1170120000	SAI-M23-SE-19	J.15
1170130000	SAI-M23-BE-19	J.15
1170140000	SAI-M23-KSC-0.08/0.56	J.16
1170150000	SAI-M23-KSC-0.14/1.00	J.16
1170150000	SAI-M23-KSC-0.14/1.00	K.12
1170170000	SAI-M23-KSC-1.00-1.5	J.16
1170180000	SAI-M23-KBC-0.34/1.00	J.16
1170180000	SAI-M23-KBC-0.34/1.00	K.12
1170210000	SAI-M23-KBC-1.00-1.5	J.16
1170220000	SAI-M23-KSC-1.5-0.14-1	J.16
1170220000	SAI-M23-KSC-1.5-0.14-1	K.12
1170230000	SAI-M23-KBC-1.5-.14-.56	J.16
1170230000	SAI-M23-KBC-1.5-.14-.56	K.12
1170240000	SAI-M23-KBC-1.5-.56-1.0	J.16
1170240000	SAI-M23-KBC-1.5-.56-1.0	K.12
1170250000	SAI-M23-KSC-2-0.75-2.5	J.17
1170250000	SAI-M23-KSC-2-0.75-2.5	K.12
1170260000	SAI-M23-KBC-2-0.75-2.5	J.17
1170260000	SAI-M23-KBC-2-0.75-2.5	K.12
1170270000	SAI-M23-KS-L-7/12	J.26
1170280000	SAI-M23-GSW-L-7/12	J.26
1170290000	SAI-M23-KSW-L-7/12	J.26
1170300000	SAIE-M23-L-VW	J.27
1170310000	SAIE-M23-L-RM	J.27
1170320000	SAIE-M23-L-EM	J.27
1170330000	SAIE-M23-L-W	J.27
1170340000	SAIE-M23-L-HW	J.27
1170350000	SAI-M23-SE-L-6	J.28
1170370000	SAI-M23-BE-L-6	J.28
1170380000	SAI-M23-SE-L-4/4	J.28
1170390000	SAI-M23-KSC-0,25-1.0	J.29
1170390000	SAI-M23-KSC-0,25-1.0	K.12
1170400000	SAI-M23-KSC-L-0.75-2.5	J.29
1170400000	SAI-M23-KSC-L-0.75-2.5	K.12
1170410000	SAI-M23-KSC-L-2.5-4.0	J.29
1170410000	SAI-M23-KSC-L-2.5-4.0	K.12
1170420000	SAI-M23-KBC-L-2.5-4.0	J.29
1170420000	SAI-M23-KBC-L-2.5-4.0	K.12
1173220000	PB-DP SUB-D ZF35TERM	C.18
1173240000	PB-DP SUB-D ZF35TERM PS	C.19

Order No.	Type	Page

1190000000

1191020000	SAIB-5/6S M12 5P A-COD	C.32
1191020000	SAIB-5/6S M12 5P A-COD	D.15
1191030000	SAISM-5/6S M12 5P A-COD	D.5

1200000000

1201210200	SAIL-M8GRJ45-4S2.0UIE	C.68
1201210500	SAIL-M8GRJ45-4S5.0UIE	C.68
1201210750	SAIL-M8GRJ45-4S7.5UIE	C.68
1201211000	SAIL-M8GRJ45-4S10UIE	C.68
1203840000	SAI M23 CRIMPING TOOL 1	K.12
1203960000	SAI M23 CRIMPING TOOL 2	K.13

1210000000

1216820020	SAIL-M8GM8G-4S-0.2-CAN	C.64
1216820025	SAIL-M8GM8G-4S-0.25-CAN	C.64
1216820030	SAIL-M8GM8G-4S-0.3-CAN	C.64
1216820050	SAIL-M8GM8G-4S-0.5-CAN	C.64
1216820080	SAIL-M8GM8G-4S-0.8-CAN	C.64
1216820100	SAIL-M8GM8G-4S-1.0-CAN	C.64
1216820150	SAIL-M8GM8G-4S-1.5-CAN	C.64
1216820300	SAIL-M8GM8G-4S-3.0-CAN	C.64
1216820350	SAIL-M8GM8G-4S-3.5-CAN	C.64
1216820500	SAIL-M8GM8G-4S-5.0-CAN	C.64
1216820700	SAIL-M8GM8G-4S-7.0-CAN	C.64
1216821000	SAIL-M8GM8G-4S-10-CAN	C.64

1220000000

1222270050	SAIL-M8GM8G-4S-10-CAN	D.38
1223650050	SAIL-M8GM8G-4S-10-CAN	D.38
1224000000	SAIL-M12WM12W-3-X.XU	J.20
1224010000	SAIL-M12WM12G-3-X.XU	J.20
1224020000	SAIB-3/7	J.20
1224030000	SAIL-M12GM12G-3-X.XV	J.20
1224040000	SAI-M23-BE-6-17MM	J.20
1224050000	SAI-M23-SE-6-10MM	J.20
1224060000	SAI-M23-SE-6-17MM	J.20
1224070000	SAI-M23-SE-7-F	J.20
1224080000	SAI-M23-BE-7-F	J.20
1224090000	SAI-M23-SE-7-3.5MM	J.20
1224100000	SAI-M23-BE-7-3.5MM	J.20
1224110000	SAI-M23-BE-7-17MM	J.20
1224120000	SAI-M23-SE-7-10MM	J.20
1224130000	SAI-M23-SE-7-17MM	J.20
1224140000	SAI-M23-SE-12-F	J.21
1224150000	SAI-M23-BE-12-F	J.21
1224160000	SAI-M23-SE-12-3.5MM	J.21
1224170000	SAI-M23-BE-12-10MM	J.21
1224180000	SAI-M23-SE-12-3.5MM-PE	J.21
1224190000	SAI-M23-BE-12-3.5MM-PE	J.21
1224210000	SAI-M23-BE-12-17MM	J.21
1224220000	SAI-M23-SE-12-10MM	J.21
1224230000	SAI-M23-SE-12-17MM	J.21
1224240000	SAI-M23-SE-16-F	J.22
1224250000	SAI-M23-BE-16-F	J.22
1224260000	SAI-M23-SE-16-3.5MM	J.22
1224270000	SAI-M23-BE-16-3.5MM	J.22
1224280000	SAI-M23-BE-16-17MM	J.22
1224290000	SAI-M23-SE-16-10MM	J.22
1224310000	SAI-M23-SE-16-17MM	J.22
1224320000	SAI-M23-SE-17-F	J.22
1224330000	SAI-M23-BE-17-F	J.22
1224340000	SAI-M23-SE-17-3.5MM	J.22
1224350000	SAI-M23-BE-17-10 MM	J.22
1224360000	SAI-M23-BE-17-17MM	J.22
1224370000	SAI-M23-SE-17-10MM	J.22
1224380000	SAI-M23-SE-17-17MM	J.22
1224390000	SAI-M23-SE-19-F	J.23
1224400000	SAI-M23-BE-19-F	J.23
1224410000	SAI-M23-SE-19-3.5MM	J.23
1224420000	SAI-M23-BE-19-10MM	J.23
1224430000	SAI-M23-SE-19-10MM-PE	J.23
1224440000	SAI-M23-SE-19-3.5MM-PE	J.23
1224450000	SAI-M23-BE-19-17MM	J.23
1224460000	SAI-M23-SE-19-3,5MMPE12	J.23
1224470000	SAI-M23-SE-19-10MM	J.23
1224480000	SAI-M23-SE-19-17MM	J.23
1224490000	SAI-M23-SE-9-F	J.21
1224500000	SAI-M23-BE-9-F	J.21
1224510000	SAI-M23-SE-9-3.5MM	J.21
1224520000	SAI-M23-BE-9-10MM	J.21
1224530000	SAI-M23-BE-9-17MM	J.21
1224540000	SAI-M23-SE-9-10MM	J.21
1224550000	SAI-M23-SE-9-17MM	J.21
1224560000	SAI-M23-SE-12-F-G	J.21
1224570000	SAI-M23-BE-12-F-G	J.21
1224580000	SAI-M23-SE-12-3.5MM-G	J.21
1224590000	SAI-M23-BE-12-10MM-G	J.21
1224610000	SAI-M23-BE-12-10MM-PE-G	J.21
1224620000	SAI-M23-SE-12-10MM-PE-G	J.21
1224630000	SAI-M23-SE-12-12MM-G	J.21
1224640000	SAI-M23-SE-12-17MM-G	J.21
1224650000	SAI-M23-SE-17-F-G	J.22
1224660000	SAI-M23-BE-17-F-G	J.22
1224670000	SAI-M23-SE-17-3.5MM-G	J.22
1224680000	SAI-M23-BE-17-10MM-G	J.22
1224690000	SAI-M23-BE-17-17MM-G	J.22
1224710000	SAI-M23-SE-17-10MM-G	J.22
1224720000	SAI-M23-SE-17-17MM-G	J.22
1224730000	SAI-M23-SE-9-F-G	J.21
1224740000	SAI-M23-BE-9-F-G	J.21
1224750000	SAI-M23-BE-9-10MM-G	J.21
1224760000	SAI-M23-BE-9-17MM-G	J.21
1224770000	SAI-M23-SE-9-10MM-G	J.21
1224780000	SAI-M23-SE-9-17MM-G	J.21

1230000000

1232620000	SAIH-PB-2X0.24-PUR	C.8
1232630000	SAIH-PB-PA-2X1.0-PVC-BL	C.30
1232640000	SAIH-PB-PA-2X1.0-PVC-SW	C.30
1235340000	SAI-AU ET SET M12 A COD	G.7

1240000000

1246490000	SAI GHDE EA 8M12	G.6
1246510000	SAI GHDE EA 8M12 SIBL	G.6
1246520000	SAI GHDE EA 16M8 0.SIBL	G.6
1246530000	SAI RA 54 KU	G.6
1246540000	SAI GHDE 3M12 1M8 SAI	G.8
1246550000	SAI GHDE 3M12 1S2B	G.8
1246560000	SAI GHDE 4M12 1S3B	G.6
1246570000	SAI GHDE 4M12 2S2B	G.8
1246580000	SAI GHDE 4M12 2X1S1B	G.8
1246590000	SAI GHDE 4M12 3S1B	G.8
1246610000	SAI GHDE 3M12 1PG9	G.13
1246660000	SAI RA 30 SB KU	G.9
1246670000	SAI GHDE 30 SB LA M12	G.10
1246680000	SAI GHDE 30 SB LA SIBL	G.10
1246690000	SAI GHDE 30 SB LA M8	G.10
1246710000	SAI BP 30 SB LA	G.10
1246720000	SAI RA 30 SB LA	G.10
1246810000	SAI GHDE 30 S KU M12	G.9
1246820000	SAI GHDE 30 S KU SI	G.9
1246830000	SAI GHDE 30 S KU M8	G.9
1246840000	SAI BP 30 SB KU	G.9

1250000000

1258930000	SAIBM-8/9S-M12	D.14
1258940000	SAISM-8/9S-M12	D.14
1259010150	SAIL-M16BW-12-1.5U	B.40

1260000000

1265920000	SAI-6-F 4P M12 L 5M	I.10
1265930000	SAI-6-F 4P M12 L 10M	I.10
1265940000	SAI-6-S12 4P M12 L	I.11
1267330000	SAI-4-S8 4P M12 L	I.11
1269790000	SAIE-M16S-5-HWM	D.39

1270000000

1271590015	SAIL-VSB-M8G-3-0.15U	B.54
1275470150	SAIL-M12BW-8S1.5U	B.15
1275750000	SAIBW-5/8S-M12 5P A-ZF	D.5
1276060150	SAIL-M12W-8S1.5U	B.15
1276450150	SAIL-VSBD180-M8G-3-1.5U	B.54
1279410150	SAIL-M12G-8-1.5U	B.14
1279420150	SAIL-M12W-8-1.5U	B.14
1279430150	SAIL-M12G-8S1.5U	B.15
1279440150	SAIL-M12GM12G-8-1.5U	B.14
1279450150	SAIL-M12GM12W-8-1.5U	B.14
1279460150	SAIL-M12GM12G-8S1.5U	B.15
1279470150	SAIL-M12GM12W-8S1.5U	B.15
1279480050	SAIE-M12B-PB-0.5U HW	C.10
1279480100	SAIE-M12B-PB-1.0U HW	C.10
1279480200	SAIE-M12B-PB-2.0U HW	C.10
1279480300	SAIL-M8GM8G-4S-10-CAN	C.10
1279490050	SAIL-M8GM8G-4S-10-CAN	C.10
1279490100	SAIL-M12WM12W-3-X.XU	C.10
1279490200	SAIL-M12WM12G-3-X.XU	C.10
1279490300	SAIL-M8GM8G-4S-10-CAN	C.10

1280000000

1283550000	SAIL-M12GM12G-3-X.XV	D.33
1289140000	SAIL-M12GM12G-4-X.XV	D.33

1290000000

1291870000	SAIL-M12GM12G-5-X.XV	E.6
1291880000	SAIL-M12GM12W-3-X.XV	E.7
1291890000	SAIL-M12GM12W-4-X.XV	E.6
1291900000	SAIL-M12GM12W-5-X.XV	E.7
1291910000	SAIL-M12WM12W-3-X.XV	E.6
1291920000	SAIL-M12WM12W-4-X.XV	E.7
1291930000	SAIL-M12WM12W-5-X.XV	E.6
1291940000	SAIL-M12GM12W-3LX.XV	E.7
1291950000	SAIL-M12GM12W-4-2LX.XV	E.7
1291970000	SAIS-5/11-7/8"	E.7
1291980000	SAISW-5/9-7/8"	E.6
1291990000	SAISW-5/11-7/8"	E.7
1292000000	SAIB-5/9-7/8"	E.6
1292010000	SAIB-5/11-7/8"	E.7
1292020000	SAIBW-5/9-7/8"	E.6
1292030000	SAIBW-5/11-7/8"	E.7
1292040000	SAISW-4/11-7/8"	E.7
1292050000	SAIB-4/11-7/8"	E.7
1292070000	SAIBW-4/11-7/8"	E.7
1292080150	SAIL-7/8"G-3-1.5U	E.11
1292090150	SAIL-7/8"W-3-1.5U	E.11
1292100150	SAIL-7/8"BG-3-1.5U	E.11
1292110150	SAIL-7/8"BW-3-1.5U	E.11
1292120150	SAIL-7/8"G-4-1.5U	E.11
1292130150	SAIL-7/8"W-4-1.5U	E.11
1292140150	SAIL-7/8"BG-4-1.5U	E.11
1292150150	SAIL-7/8"BW-4-1.5U	E.11
1292170150	SAIL-7/8"G-5-1.5U	E.11
1292180150	SAIL-7/8"W-5-1.5U	E.11
1292190150	SAIL-7/8"BG-5-1.5U	E.11
1292200150	SAIL-7/8"BW-5-1.5U	E.11
1292330000	SAIE-7/8"S-3-0.2U-PG11	E.9
1292340000	SAIE-7/8"S-3-0.2U-PG13.5	E.10
1292350000	SAIE-7/8"S-3-0.2U-H	E.8
1292370000	SAIE-7/8"B-3-0.2U-PG11	E.9
1292380000	SAIE-7/8"B-3-0.2U-PG13.5	E.10
1292390000	SAIE-7/8"B-3-0.2U-H	E.8
1292400000	SAIE-7/8"S-4-0.2U-PG11	E.9
1292410000	SAIE-7/8"S-4-0.2U-PG13.5	E.10
1292420000	SAIE-7/8"S-4-0.2U-H	E.8
1292430000	SAIE-7/8"B-4-0.2U-PG11	E.9
1292440000	SAIE-7/8"B-4-0.2U-PG13.5	E.10
1292450000	SAIE-7/8"B-4-0.2U-H	E.8
1292470000	SAIE-7/8"S-5-0.2-PG11	E.9
1292480000	SAIE-7/8"S-5-0.2U-PG13.5	E.10
1292490000	SAIE-7/8"S-5-0.2U-H	E.8
1292500000	SAIE-7/8"B-5-0.2U-PG11	E.9
1292510000	SAIE-7/8"B-5-0.2U-PG13.5	E.10
1292520000	SAIE-7/8"B-5-0.2U-H	E.8
1296730000	SAI-M23-BE-12-G	J.14
1299390000	SAI-M23-GS-L-11/17	J.12

1300000000

1301220000	SAIS-5/9-7/8"	E.6
1304390000	SAIS-M16-6/9	D.27
1304430000	SAIS-M16-8/9	D.27
1309680015	SAIL-VSC-M8G-0.15U	B.55

1310000000

1311690150	SAIL-M12W-12-1.5U	B.14
1311700150	SAIL-M12G-12-1.5U	B.14
1312970000	SAIE-M12B-5-LP	D.37
1312980000	SAIE-M12S-5-LP	D.37

1320000000

1321700000	SAIS-M16-2/9	D.27
1324010000	IE-PCB-M12X-S-180	C.79
1324020000	IE-PS-M12X-P-FH	C.79
1326720000	SAIE-M16B-4-L	D.39
1326730000	SAIE-M16B-5-L	D.39
1326740000	SAIE-M16B-7-L	D.39

1340000000

1341230050	SAIE-M12S-5S0.5U HW	D.38
1341240050	SAIE-M12S-8S0.5U HW	D.38
1344720000	SAIH-SLL-3X1.0-16X0.5	B.57
1345520000	SAIH-SLL-3X0.34-UGE	B.56
1345530000	SAIH-SLL-4X0.34-UGE	B.56
1345540000	SAIH-SLL-5X0.34-UGE	B.56

1350000000

1353700000	SAIS-4/11-1.5	D.9
1353730000	SAIB-4/11-1.5	D.9
1353740000	SAIS-5/11-1.5	D.9
1353750000	SAIB-5/11-1.5	D.9
1353770000	SAIE-M12S-4-0.5U P9 1.5	D.34
1353780000	SAIE-M12B-4-0.5U P9 1.5	D.34
1357320000	SAIH-SLL-3X0.34 SI PUR	B.56
1357330000	SAIH-SLL-4X0.34 SI PUR	B.56
1357340000	SAIH-SLL-5X0.34 SI PUR	B.56

1390000000

1393080000	IE-PCB2-M12X-S-180	C.79

1600000000

1606530000	BL 3.50/07/180 SN DKGN BX	I.43
1609801044	DEK 5/5 MC-10 NEUT. WS	K.16
1609810000	DEK 5/5 MC BEDRUCKT	K.16
1609880000	WS 15/5 MC NEUTRAL	K.16
1609890000	WS 15/5 MC BEDRUCKT	K.16
1609940000	ESG 9/20 MC NEUTRAL WS	K.16

1630000000

1635000000	WS 10/5 MC NEUTRAL	K.16
1635010000	WS 10/5 MC BEDRUCKT	K.16

1680000000

1689470001	VT SF 5/21 NEUTRAL WS V0	C.69

1700000000

1701230000	SAI-4-M 5P M12	I.7
1701231000	SAI-4-M 5P M12 UT	I.7
1701232000	SAI-4-MH-5P M12	I.36
1701233000	SAI-4-MHD-5P M12	I.37
1701240000	SAI-6-M 5P M12	I.7
1701241000	SAI-6-M 5P M12 UT	I.7
1701242000	SAI-6-MH-5P M12	I.36
1701243000	SAI-6-MHD-5P M12	I.37
1701250000	SAI-8-M 5P M12	I.7
1701251000	SAI-8-M 5P M12 UT	I.7
1701252000	SAI-8-MH-5P M12	I.36
1701253000	SAI-8-MHD-5P M12	I.37
1705920000	SAI-4-M 4P M12	I.7
1705921000	SAI-4 M 4P M12 UT	I.7
1705922000	SAI-4-MH-4P M12	I.36
1705923000	SAI-4-MHD-4P M12	I.37
1705930000	SAI-6-M 4P M12	I.7
1705931000	SAI-6-M 4P M12 UT	I.7
1705932000	SAI-6-MH-4P M12	I.36
1705933000	SAI-6-MHD-4P M12	I.37
1705940000	SAI-8-M 4P M12	I.7
1705941000	SAI-8-M 4P M12 UT	I.7
1705942000	SAI-8-MH-4P M12	I.36
1705943000	SAI-8-MHD-4P M12	I.37

1710000000

1718411687	TM-I 12 NEUTRAL GE	C.69
1718431044	TM-I 18 NEUTRAL WS	K.15
1718431687	TM-I 18 NEUTRAL GE	C.69
1719840000	TM 4/12 HF/HB	C.69
1719850000	TM 4/18 HF/HB	C.69

1720000000

1724750000	SAI-4/6/8-MH BL3.5	I.7
1724750050	SAI-4/6/8-MH BL3.5 SV	I.7
1724752000	SAI-4/6/8 MH-MH BL 3.5	I.36
1724753000	SAI-4/6/8 MH-MHD BL 3.5	I.37
1724754000	SAI-4/6/8 MH-MM BL 3.5	I.35

1730000000

1730560001	VT SF 6/21 NEUTRAL WS V0	C.69
1736230000	GWDR M16-NP	C.81
1737070000	VP M16-EXE SW	C.81
1737210000	VG M16-EXE MS	C.81

1740000000

1740191000	SAI-8-M 5P M12 OL UT	I.7
1747320001	SFC 1/12 NEUTRAL WS	K.14
1747320002	SFC 1/12 NEUTRAL BL	K.14
1747320003	SFC 1/12 NEUTRAL RT	K.14
1747320004	SFC 1/12 NEUTRAL GE	K.14

1750000000

1752080000	SAI-4/6/8-MH BLZF3.5	I.7
1752080050	SAI-4/6/8-MH BLZF3.5 SV	I.7
1758320001	SFC 2/12 NEUTRAL WS	K.14
1758320002	SFC 2/12 NEUTRAL BL	K.14
1758320003	SFC 2/12 NEUTRAL RT	K.14
1758320004	SFC 2/12 NEUTRAL GE	K.14

1760000000

1760040000	SAI-4-M 3P IDC	I.28
1760041000	SAI-4-M 3P IDC UT	I.28
1760050000	SAI-6-M 3P IDC	I.28
1760051000	SAI-6-M 3P IDC UT	I.28
1760060000	SAI-8-M 3P IDC	I.28
1760061000	SAI-8-M 3P IDC UT	I.28
1766660000	SAI-4-F 4P IDC PUR 5M	I.29
1766670000	SAI-4-F 4P IDC PUR 10M	I.29
1766680000	SAI-6-F 4P IDC PUR 5M	I.29
1766690000	SAI-6-F 4P IDC PUR 10M	I.29
1766700000	SAI-8-F 4P IDC PUR 5M	I.29
1766710000	SAI-8-F 4P IDC PUR 10M	I.29
1766720000	SAI-4-F 3P IDC PUR 5M	I.29
1766730000	SAI-4-F 3P IDC PUR 10M	I.29
1766740000	SAI-6-F 3P IDC PUR 5M	I.29
1766750000	SAI-6-F 3P IDC PUR 10M	I.29
1766760000	SAI-8-F 3P IDC PUR 5M	I.29
1766770000	SAI-8-F 3P IDC PUR 10M	I.29
1766780000	SAI-4-M 4P IDC	I.28
1766781000	SAI-4-M 4P IDC UT	I.28
1766790000	SAI-6-M 4P IDC	I.28
1766791000	SAI-6-M 4P IDC UT	I.28
1766800000	SAI-8-M 4P IDC	I.28
1766801000	SAI-8-M 4P IDC UT	I.28

Order No.	Type	Page
1766810000	SAI-SA-4-IDC	I.26
1767880000	SAI-8-M 5P M12 ZF III	I.7

1770000000

1777730000	VP M16-MS65	C.81
1779080001	SFC 1/21 NEUTRAL WS	K.14
1779080002	SFC 1/21 NEUTRAL BL	K.14
1779080003	SFC 1/21 NEUTRAL RT	K.14
1779080004	SFC 1/21 NEUTRAL GE	K.14

1780000000

1781060000	SAI-8-M 5P M12 NPN	I.7
1781520000	SAI-SK Stecker M12	D.31
1781520000	SAI-SK Stecker M12	F.10
1781540001	SAIB-4-IDC-M12 small	D.24
1781550001	SAIS-4-IDC M12 small	D.24
1782740000	SAI-8-MMH 5P M12 ZF	I.35
1782750000	SAI-4/6/8 MH MH BLZF3,5	I.36
1782760000	SAI-8-MH-5P M12 ZF III	I.36
1783410000	SAI-Y-5S B2-4 2M12	D.28
1783420000	SAI-Y-4-4/2-4 M12/8	D.28
1783430000	SAI-Y-5S PARA 2M12	D.28
1783430000	SAI-Y-5S PARA 2M12	H.7
1783460000	SAI-4/6/8-MH LEER	I.7
1783490000	SAI-8-MM 5P M12	I.35
1783491000	SAI-8-MM 5P M12 UT	I.35
1783500000	SAI-4-MM 5P M12	I.35
1783510000	SAI-8-MMS 5P M12	I.35
1783520000	SAI-4-MMS 5P M12	I.35
1783530000	SAI-8-MMS 4P M12	I.35
1783540000	SAI-4-MMS 4P M12	I.35
1784030001	SAIB-3-IDC-M8 small	D.26
1784040001	SAIS-3-IDC M8 small	D.26
1784050001	SAIB-4-IDC-M8 small	D.26
1784060001	SAIS-4-IDC M8 small	D.26
1784500000	SAI-8-F 5P 20M 0.5/1.0U	I.8
1784510000	SAI-8-F 5P 15M 0.5/1.0U	I.8
1784570000	SAI-8-F 4P M8 PUR 10M	I.50
1784580000	SAI-8-F 4P M8 PUR 5M	I.50
1784590000	SAI-4-F 4P M8 PUR 10M	I.50
1784600000	SAI-4-F 4P M8 PUR 5M	I.50
1784610000	SAI-8-F 3P M8 PUR 10M	I.50
1784620000	SAI-8-F 3P M8 PUR 5M	I.50
1784630000	SAI-4-F 3P M8 PUR 10M	I.50
1784640000	SAI-4-F 3P M8 PUR 5M	I.50
1784650000	SAI-8-M23 4P M8	I.51
1784650000	SAI-8-M23 4P M8	J.33
1784660000	SAI-4-M23 4P M8	I.51
1784660000	SAI-4-M23 4P M8	J.33
1784670000	SAI-8-M 3P M8	I.50
1784680000	SAI-4-M 3P M8	I.50
1784690000	SAI-8-M 4P M8	I.50
1784700000	SAI-4-M 4P M8	I.50
1784740000	SAIS-M-5/8S M12 5P A-COD	C.32
1784740000	SAIS-M-5/8S M12 5P A-COD	D.15
1784740002	SAIBM-4/8S-M12 4P A-ZF	D.5
1784750000	SAIB-M-5/8S M12 5P A-COD	C.32
1784750000	SAIB-M-5/8S M12 5P A-COD	D.15
1784760000	SAIEND CAN-M12 5P A-COD	F.14
1784770000	SAIEND PB M12 5P B-COD	F.10
1784780000	SAIBM 5/8S M12 5P B-COD	C.12
1784780000	SAIBM 5/8S M12 5P B-COD	D.16
1784790000	SAISM 5/8S M12 5P B-COD	C.12
1784790000	SAISM 5/8S M12 5P B-COD	D.16
1785100100	FBC PA M12 M-FM 1M	C.29
1785110100	FBC PA M12 FM 1M	C.28
1785120100	FBC PA M12 M 1M	C.28
1785130100	FBCEX PA M12 M-FM 1M	C.29
1785140100	FBCEX PA M12 FM 1M	C.28
1785150100	FBCEX PA M12 M 1M	C.28
1789190000	SAI-8-MF 4P PUR 10M M12	I.44

1790000000

1791450400	SAI-4/6/8-MHF 4P PUR 4M	I.44
1791450600	SAI-4/6/8-MHF 4P PUR 6M	I.44
1791450900	SAI-4/6/8-MHF 4P PUR 9M	I.44
1791451400	SAI-4/6/8-MHF 4P PUR14M	I.44
1791452000	SAI-4/6/8-MHF 4P PUR20M	I.44
1791452800	SAI-4/6/8-MHF 4P PUR28M	I.44
1791453400	SAI-4/6/8-MHF 4P PUR34M	I.44
1791460400	SAI-4/6/8-MHF 5P PUR 4M	I.44
1791460600	SAI-4/6/8-MHF 5P PUR 6M	I.44
1791460900	SAI-4/6/8-MHF 5P PUR 9M	I.44
1791461400	SAI-4/6/8-MHF 5P PUR14M	I.44
1791461600	SAI-4/6/8-MHF 5P PUR16M	I.44
1791462000	SAI-4/6/8-MHF 5P PUR20M	I.44
1791462800	SAI-4/6/8-MHF 5P PUR28M	I.44
1791463400	SAI-4/6/8-MHF 5P PUR34M	I.44
1791464000	SAI-4/6/8-MHF 5P PUR40M	I.44
1791465000	SAI-4/6/8-MHF 5P PUR50M	I.44
1791465500	SAI-4/6/8-MHF 5P PUR55M	I.44
1794850000	SAI-SK-M12 IDC	D.31
1794850000	SAI-SK-M12 IDC	I.27
1795020000	SAI-IDC-TOOL	I.27
1795470000	SAI-8-S 5P M12	I.12
1795500000	POS-5P M12 M20 300mm	C.33

Order No.	Type	Page
1795900000	SAI-8-M16 3P M8	I.51
1798480000	TM 203/18 V0	K.15
1799960000	SAI-8-MF 4P PUR 5M M12	I.44

1800000000

1800000000	SAI-4-M 5P M12 0L	I.7
1802750000	SAI-SK M12 MT	D.31
1802760000	SAI-SK M8	C.59
1802760000	SAI-SK M8	D.31
1802760000	SAI-SK M8	F.10
1803850000	SAIS-M8-4P	D.20
1803860000	SAIS-M8-3P	D.20
1803870000	SAIB-M8-3P	D.20
1803880000	SAIB-M8-4P	D.20
1803910000	SAIBW-M-4/8 M12	C.32
1803910000	SAIBW-M-4/8 M12	D.15
1803920000	SAIBW-M-5/8 M12	C.32
1803920000	SAIBW-M-5/8 M12	D.15
1803930000	SAISW-M-4/8 M12	C.32
1803930000	SAISW-M-4/8 M12	D.15
1803930001	SAISW-4/8S-M12 4P D-ZF	D.18
1803940000	SAISW-M-5/8 M12	C.32
1803940000	SAISW-M-5/8 M12	D.15
1804580000	SAI-4-MF 5P PUR 10M	I.44
1804590000	SAI-8-MF 5P PUR 5M	I.44
1804600000	SAI-4-MF 5P PUR 5M	I.44
1805660000	SAI Y-4S M8-M8	D.28
1805720000	SFC 1/30 NEUTRAL BL	K.14
1805730000	SFC 1/30 NEUTRAL GE	K.14
1805740000	SFC 1/30 NEUTRAL RT	K.14
1805760000	SFC 1/30 NEUTRAL WS	K.14
1805770000	SFC 2/21 NEUTRAL BL	K.14
1805780000	SFC 2/21 NEUTRAL GE	K.14
1805790000	SFC 2/21 NEUTRAL RT	K.14
1805810000	SFC 2/21 NEUTRAL WS	K.14
1805820000	SFC 2/30 NEUTRAL BL	K.14
1805830000	SFC 2/30 NEUTRAL GE	K.14
1805850000	SFC 2/30 NEUTRAL RT	K.14
1805870000	SFC 2/30 NEUTRAL WS	K.14
1806010000	SAI-4-M 5P M12 1:1	I.38
1806011000	SAI-4-M 5P M12 M1:1 UT	I.38
1807230000	SAIB-4/9	D.7
1807240000	SAIBW-4/9	D.7
1807250000	SAIB-5/9	D.8
1807330000	SAIBW-5/9	D.8
1807340000	SAIS-4/9	D.7
1807350000	SAIS-5/9	D.8
1807360000	SAISW-4/9	D.7
1807370000	SAISW- 5/9	D.8
1807640000	SAI-4-M 8P M12	I.39
1807641000	SAI-4-M 8P M12 UT	I.39
1808830000	SAISW-4/9-7/8"	E.6
1808840000	SAIS-4/9-7/8"	E.6
1808970150	SAIL-M12BW-4S1.5U	B.17

1810000000

1812170000	SAI-8-B 4P M12 F10	I.43
1812470000	SAIBW-4/9-7/8"	E.6
1812480000	SAIB-4/9-7/8"	E.6
1812540150	SAIL-M12BG-4S1.5U	B.17
1812550150	SAIL-ZW-M12BG-2/4-1.5U	B.38
1812870000	SAISW-4-IDC M12	D.24
1812890000	SAIBW-4-IDC M12	D.24
1813130000	SFC 0/12 NEUTRAL WS	K.14
1813150000	SFC 0/12 NEUTRAL RT	K.14
1813160000	SFC 0/12 NEUTRAL GE	K.14
1813170000	SFC 0/12 NEUTRAL BL	K.14
1813190000	SFC 0/21 NEUTRAL WS	K.14
1813200000	SFC 0/21 NEUTRAL RT	K.14
1813210000	SFC 0/21 NEUTRAL GE	K.14
1813220000	SFC 0/21 NEUTRAL BL	K.14
1813240000	SFC 0/30 NEUTRAL WS	K.14
1813250000	SFC 0/30 NEUTRAL RT	K.14
1813260000	SFC 0/30 NEUTRAL GE	K.14
1813270000	SFC 0/30 NEUTRAL BL	K.14
1814890000	SAIE-M12B-5-0.5U-PG9	D.35
1814990000	SAI-8-F 5P NPN-PNP 5M	I.40
1815670000	SAIL-M12WM12W-3-X.XU	B.7
1815670150	SAIL-M12WM12G-3-X.XU	B.25
1815670300	SAIB-3/7	B.7
1815670500	SAIL-M12GM12G-3-X.XV	B.7
1815671000	SAIL-M12GM12G-4-X.XV	B.7
1816610000	SAIL-M12GM12G-5-X.XV	I.7
1818090100	SAIL-M12GM12W-3-X.XV	J.30
1818140100	SAIL-M12GM12W-4-X.XV	J.30
1818160100	SAIS-M23-19P-ST-1,0M	J.30
1818180100	SAIB-M23-19P-ST-1,0M	J.30
1819450000	SAI-WDF 5P M12 60mm	D.30

1820000000

1820690000	SAI-WDF 5P B M12 60mm	D.30
1821050000	SAIL-M12WM12G-3-X.XU	B.6
1821050150	SAIL-M12WM12G-3-1.5U	B.6
1821050300	SAIL-M12WM12G-3-3.0U	B.6
1821050500	SAIL-M12WM12G-3-5.0U	B.6
1821051000	SAIL-M12WM12G-3-10U	B.6

Order No.	Type	Page
1824570000	SAIL-M8GM8G-3-X.XU	B.4
1824570150	SAIL-M8GM8G-3-1.5U	B.32
1824570300	SAIL-M8GM8G-3-3.0U	B.4
1824570500	SAIL-M8GM8G-3-5.0U	B.4
1824571000	SAIL-M8GM8G-3-10U	B.4
1824580000	SAIL-M8GM8W-3-X.XU	B.5
1824580150	SAIL-M8GM8W-3-1.5U	B.32
1824580300	SAIL-M8GM8W-3-3.0U	B.5
1824580500	SAIL-M8GM8W-3-5.0U	B.5
1824581000	SAIL-M8GM8W-3-10U	B.5
1824590000	SAIL-M8G-3-X.XU	B.4
1824590150	SAIL-M8G-3-1.5U	B.19
1824590300	SAIL-M8G-3-3.0U	B.4
1824590500	SAIL-M8G-3-5.0U	B.4
1824591000	SAIL-M8G-3-10U	B.4
1826880000	SAI-Y-5S- M12/M12	D.28
1827010150	SAIL-M8BWR-3-1.5U	B.20
1827020150	SAIL-M8BGR-3-1.5U	B.20
1828610000	SAI-8-F 4P M8 L 10M	I.54
1828620000	SAI-8-F 4P M8 L 5M	I.54
1828630000	SAI-12-F 3P M8 L 10M	I.54
1828640000	SAI-12-F 3P M8 L 5M	I.54
1828650000	SAI-10-F 3P M8 L 10M	I.54
1828660000	SAI-10-F 3P M8 L 5M	I.54
1828670000	SAI-8-F 3P M8 L 10M	I.54
1828680000	SAI-8-F 3P M8 L 5M	I.54
1828690000	SAI-6-F 3P M8 L 10M	I.54
1828700000	SAI-6-F 3P M8 L 5M	I.54
1828710000	SAI-4-F 3P M8 L 10M	I.54
1828720000	SAI-4-F 3P M8 L 5M	I.54
1828730000	SAI-6-S 3P M8 L	I.52
1828740000	SAI-4-S 3P M8 L	I.52

1830000000

1831020000	SAI-8-M16 4P M12	I.13
1836910000	SAIE-M12B-5-0.5U-M16	D.33
1836960000	SAIB-8/9	D.8
1836970000	SAIS-8/9	D.8
1837560000	SAIS-ZWW	D.30

1840000000

1845120150	SAIL-VSA-1.5U(0.5)	B.51
1845140150	SAIL-VSB-1.5U(0.5)	B.52
1845160150	SAIL-VSBD-1.5U(0.5)	B.52
1845800000	SAI-4-F 4P M5 L10M	I.58
1845810000	SAI-8-F 4P M5 L10M	I.58
1845820000	SAI-4-F 3P M5 L10M	I.58
1845830000	SAI-8-F 3P M5 L10M	I.58
1845840000	SAI-4-S 4P M5	I.58
1845850000	SAI-8-S 3P M5	I.58
1845860000	SAI-8-S16/19P 4P M5	I.59
1845870000	SAI-4-S16 4P M5	I.59
1845880000	SAI-8-S16 3P M5	I.59
1845890000	SAI-4-S16 3P M5	I.59
1847560000	SAI-8-B 5P M12 SL	I.41
1847920000	SAI-8-S 4P FC	I.20
1847920000	SAI-8-S 4P FC	J.31
1847930000	SAI-4-F 5P FC 10M	I.19
1847940000	SAI-4-F 5P FC 2M	I.19
1847950000	SAI-4-F 5P FC 5M	I.19
1847960000	SAI-4-S 4P FC	I.20
1847960000	SAI-4-S 4P FC	J.31
1847970000	SAI-4-S 5P FC	I.20
1847970000	SAI-4-S 5P FC	J.31
1847980000	SAI-8-F 4P FC 10M	I.19
1847990000	SAI-8-F 4P FC 2M	I.19
1848000000	SAI-8-F 4P FC 5M	I.19
1848010000	SAI-8-F 5P FC 10M	I.19
1848020000	SAI-8-F 5P FC 2M	I.19
1848030000	SAI-8-F 5P FC 5M	I.19
1848040000	SAI-8-S 5P FC	I.20
1848040000	SAI-8-S 5P FC	J.31
1848050000	SAI-4-F 4P FC 10M	I.19
1848060000	SAI-4-F 4P FC 5M	I.19
1848070000	SAI-8-M 5P FC	I.22
1848080000	SAI-4-F 4P FC 2M	I.19
1849670000	SAI-6-F 4P M8 L 10M	I.54
1849680000	SAI-4-F 4P M8 L 5M	I.54
1849690000	SAI-4-F 4P M8 L 10M	I.54
1849700000	SAI-6-F 4P M8 L 5M	I.54

1850000000

1851740000	SAI-4-F 3P M5 L5M	I.58
1851750000	SAI-8-F 4P M5 L5M	I.58
1851760000	SAI-8-F 3P M5 L5M	I.58
1851770000	SAI-4-F 4P M5 L5M	I.58
1852720000	SAIS-3-IDC (0,75) M12	D.25
1852730000	SAIB-3-IDC (0,75) M12	D.25
1852740000	SAIS-4-IDC (0,75) M12	D.25
1852750000	SAIB-4-IDC (0,75) M12	D.25
1854000000	SAI-4-M 5P M12 ZF	I.7
1854060150	SAIL-M5G-3P-1.5U	B.23
1855310000	SAI-SK M5	D.31
1856110000	SAIE-M12B-5-0.5U-FP-M16	D.33
1856120000	SAIE-M12S-5-0.5U-PG9	D.35
1856130000	SAIE-M8B-3-0.5U-FP-M8	D.36

Order No.	Type	Page
1856140000	SAIE-M8B-4-0.5U-FP-M8	D.36
1857550000	SAIL-M8W-3-X.XU	B.4
1857550150	SAIL-M8W-3-1.5U	B.19
1857550300	SAIL-M8W-3-3.0U	B.4
1857550500	SAIL-M8W-3-5.0U	B.4
1857551000	SAIL-M8W-3-10U	B.4
1857560000	SAIL-M8W-4-X.XU	B.4
1857560150	SAIL-M8W-4-1.5U	B.19
1857560300	SAIL-M8W-4-3.0U	B.4
1857560500	SAIL-M8W-4-5.0U	B.4
1857561000	SAIL-M8W-4-10U	B.4
1857660000	SAIL-M8GM8W-4-X.XU	B.5
1857660150	SAIL-M8GM8W-4-1.5U	B.32
1857660300	SAIL-M8GM8W-4-3.0U	B.5
1857660500	SAIL-M8GM8W-4-5.0U	B.5
1857661000	SAIL-M8GM8W-4-10U	B.5
1857670000	SAIL-M8WM8W-3-X.XU	B.5
1857670150	SAIL-M8WM8W-3-1.5U	B.32
1857670300	SAIL-M8WM8W-3-3.0U	B.5
1857670500	SAIL-M8WM8W-3-5.0U	B.5
1857671000	SAIL-M8WM8W-3-10U	B.5
1857680000	SAIL-M8WM8W-4-X.XU	B.5
1857680150	SAIL-M8WM8W-4-1.5U	B.32
1857680300	SAIL-M8WM8W-4-3.0U	B.5
1857680500	SAIL-M8WM8W-4-5.0U	B.5
1857681000	SAIL-M8WM8W-4-10U	B.5
1857690150	SAIL-VSA-M12W-1.5U	B.47
1857700150	SAIL-VSB-M12W-1.5U	B.48
1857710150	SAIL-VSBD-M12W-1.5U	B.48
1857720150	SAIL-VSC-M12W-1.5U	B.49
1857730150	SAIL-VSCD-M12W-1.5U	B.49
1859110000	SAI-4-SH 4P FC	I.21
1859110000	SAI-4-SH 4P FC	J.32
1859120000	SAI-8-SH 4P FC	I.21
1859120000	SAI-8-SH 4P FC	J.32
1859130000	SAI-4-SH 5P FC	I.21
1859130000	SAI-4-SH 5P FC	J.32
1859140000	SAI-8-SH 5P FC	I.21
1859140000	SAI-8-SH 5P FC	J.32

1860000000

1861090000	SAIE-M12S-4-0.5U-M16	D.33
1861110000	SAIE-M12S-8-0.5U-M16	D.33
1861120000	SAIE-M12B-4-0.5U-M16	D.33
1861140000	SAIE-M12B-8-0,5U-M16	D.33
1861160000	SAIE-M12S-4-0.5U-FP-M16	D.33
1861170000	SAIE-M12S-5-0.5U-FP-M16	D.33
1861180000	SAIE-M12S-8-0.5U-FP-M16	D.33
1861190000	SAIE-M12B-4-0.5U-FP-M16	D.33
1861210000	SAIE-M12B-8-0.5U-FP-M16	D.33
1861220000	SAIE-M12S-4-0.5U-PG9	D.35
1861220001	SAIE-M12S-4-0.5U-AEH-VA	C.33
1861230000	SAIE-M12S-5-0.5U-M16	D.33
1861240000	SAIE-M12S-8-0.5U-PG9	D.35
1861250000	SAIE-M12B-4-0.5U-PG9	D.35
1861270000	SAIE-M12B-8-0.5U-PG9	D.35
1861280000	SAIE-M8R-3-0.5U-FP-M8	D.35
1861290000	SAIE-M8R-4-0.5U-FP-M8	D.35
1861540000	SAI-4-S 5P CNOMO	I.23
1861550000	SAI-8-F 5P CNOMO 5M	I.23
1861560000	SAI-4-F 5P CNOMO 10M	I.23
1861570000	SAI-4-F 5P CNOMO 5M	I.23
1861580000	SAI-8-S 5P CNOMO	I.23
1861590000	SAI-8-F 5P CNOMO 10M	I.23
1862200000	WK-1/4"(Screwty)	K.5
1864730000	SAIS-3-IDC-M12B-COD	C.13
1864730000	SAIS-3-IDC-M12B-COD	D.16
1864740000	SAIB-3-IDC-M12B-COD	C.13
1864740000	SAIB-3-IDC-M12B-COD	D.16
1865310000	SAI-8-F 5P M12 5M VA	I.30
1865870150	SAIL-M12BG-8-1.5U	B.14
1867410150	SAIL-M12BG-3S1.5U	B.17
1868350000	SAI-4-M 4P Exi Z1 0L	I.61
1868360000	SAI-4-M 4P Exi Z1 IL	I.61
1868370000	SAI-8-M 4P Exi Z1 IL	I.61
1868560000	DAE M12 PA short	C.81

1870000000

1871680000	SAI-8-S12 3P M8 L	I.52
1871700150	SAIL-M5G-4P-1.5U	B.23
1872440000	SAI-8-SHB 5P FC	I.24
1872460000	SAI-8-SHB 5P F13 FC	I.25
1873030000	SAIE-M5S-4-0.2U	D.36
1873040000	SAIE-M5B-4-0.2U	D.36
1873050000	SAIE-M5S-3-0.2U	D.36
1873060000	SAIE-M5B-3-0.2U	D.36
1873070000	SAIB-VSA-3P/250/9-0B	D.40
1873080000	SAIB-VSA-4P/250/9-0B	D.40
1873090000	SAIB-VSA-3P/250/11-0B	D.40
1873100000	SAIB-VSA-4P/250/11-0B	D.40
1873110000	SAIB-VSA-3P/230/9/LD	D.40
1873120000	SAIB-VSA-3P/24/9/LD	D.40
1873130000	SAIB-VSA-3P/230/9-H/0B	D.40
1873140000	SAIB-VSA-4P/230/9-H/0B	D.40
1873150000	SAIB-VSA-3P/230/11-H/0B	D.40
1873160000	SAIB-VSA-4P/230/11-H/0B	D.40
1873170000	SAIB-VSB-3P/250/9-0B	D.40

Order No.	Type	Page
1873180000	SAIB-VSB-3P/24/9/LD	D.40
1873190000	SAIB-VSBD-3P/250/9-0B	D.40
1873200000	SAIB-VSC-3P/250/7-0B	D.40
1873210000	SAIB-VSC-4P/250/7-0B	D.40
1873220000	SAIB-VSCD-3P/250/7-0B	D.40
1873230000	SAIB-VSCD-4P/250/7-0B	D.40
1873240150	SAIL-M5W-4P-1.5U	B.23
1873250150	SAIL-M5BG-4P-1.5U	B.23
1873260150	SAIL-M5BW-3P-1.5U	B.23
1873270150	SAIL-M5BW-4P-1.5U	B.23
1873280150	SAIL-M5W-3P-1.5U	B.23
1873290150	SAIL-M5BG-3P-1.5U	B.23
1873300150	SAIL-M12G-PB-1.5D	C.6
1873310150	SAIL-M12GM12G-PB-1.5D	C.7
1873320150	SAIL-M12BG-PB-1.5D	C.6
1877250000	SAIL-M8GM8W-3LX.XU	B.5
1877250150	SAIL-M8GM8W-3L1.5U	B.34
1877250300	SAIL-M8GM8W-3L3.0U	B.5
1877250500	SAIL-M8GM8W-3L5.0U	B.5
1877251000	SAIL-M8GM8W-3L10U	B.5
1877440100	SAIB-M23-12P-AN-1,0M	J.30
1877950000	SAI-10-S12 3P M8 L	I.52
1879710150	SAIL-M12BG-12-1.5U	B.14

1880000000

Order No.	Type	Page
1880470000	SAIL-M8GM8G-4-X.XU	B.5
1880470150	SAIL-M8GM8G-4-1.5U	B.32
1880470300	SAIL-M8GM8G-4-3.0U	B.5
1880470500	SAIL-M8GM8G-4-5.0U	B.5
1880471000	SAIL-M8GM8G-4-10U	B.5
1881710000	SAI-Y-5S M12/M12 2Bo	D.30
1883460150	SAIL-M12BW-8-1.5U	B.14
1886440100	SAIB-M23-12P-ST-1,0M	J.30

1890000000

Order No.	Type	Page
1890000000	SAI-AU M12 PB AI/AO/DI	F.9
1890010000	SAI-AU M12 PB 16DI/8DO	F.8
1890020000	SAI-AU M12 PB 16DI	F.8
1890520150	SAIL-M12BG-8S1.5U	B.15
1892080000	SAI-8-M 5P M12 ECO	I.17
1892080005	SAI-8-M 5P M12 NPN ECO	I.17
1892081000	SAI-8-M 5P M12 ECO UT	I.17
1892090000	SAI-6-M 5P M12 ECO	I.17
1892091000	SAI-6-M 5P M12 ECO UT	I.17
1892100000	SAI-4-M 5P M12 ECO	I.17
1892100005	SAI-4-M 5P M12 NPN ECO	I.17
1892101000	SAI-4-M 5P M12 ECO UT	I.17
1892120000	SAISM-4/8S-M12-4P D-COD	C.77
1892120000	SAISM-4/8S-M12-4P D-COD	D.16
1892120001	SAISM-4/8S-M12 4P D-ZF	D.18
1892130000	SAIBM-4/8S-M12-4P D-COD	C.77
1892130000	SAIBM-4/8S-M12-4P D-COD	D.16
1892130001	SAIBM-4/8S-M12 4P D-ZF	D.18
1894380000	SAI-8-M 4P Exi Z1 0L	I.61
1896050000	SAI-4-M 5P M12 Ex ia	I.61
1896070000	SAI-6-M 5P M12 Ex ia	I.61
1896090000	SAI-8-M 5P M12 Ex ia	I.61
1897680000	SAI-4-MMS 5P M12 1:1	I.38
1898240150	SAIL-M12BW-12-1.5U	B.14

1900000000

Order No.	Type	Page
1900000000	Screwty- M12	K.5
1900001000	Screwty-M12-DM	H.7
1900001000	Screwty-M12-DM	I.27
1900001000	Screwty-M12-DM	K.5
1900010000	Screwty- M8	K.5
1900011000	Screwty-M8-DM	K.5
1900020000	Screwty- M12 F	K.5
1900021000	Screwty-M12 F-DM	K.5
1900030000	Screwty- M8 F	K.5
1900031000	Screwty-M8 F-DM	K.5
1900100000	Screwty M12 KO o. SD	K.5
1900110000	Screwty M8 KO o. SD	K.5
1900120000	Screwty M12f KO o. SD	K.5
1900130000	Screwty M8F KO o. SD	K.5
1902110000	SAIH-SLL-3x0,34mm²(PUR)	B.56
1902120000	SAIH-SLL-4x0,25mm²(PUR)	B.56
1902130000	SAIH-SLL-4x0,34mm²(PUR)	B.56
1902140000	SAIH-SLL-3x0,25mm²(PUR)	B.56
1902160000	SAIH-SLL-3x0,34mm²(PVC)	B.56
1902170000	SAIH-SLL-4x0,25mm²(PVC)	B.56
1902180000	SAIH-SLL-4x0,34mm²(PVC)	B.56
1902190000	SAIH-SLL-3x0,25mm²(PVC)	B.56
1906260000	SAIL-M12W-4-X.XU	B.4
1906260150	SAIL-M12W-4-1.5U	B.11
1906260150	SAIL-M12W-4-1.5U	B.4
1906260300	SAIL-M12W-4-3.0U	B.4
1906260500	SAIL-M12W-4-5.0U	B.4
1906261000	SAIL-M12W-4-10U	B.4
1906270000	SAIL-M8G-4-X.XU	B.4
1906270150	SAIL-M8G-4-1.5U	B.19
1906270150	SAIL-M8G-4-1.5U	B.4
1906270300	SAIL-M8G-4-3.0U	B.4
1906270500	SAIL-M8G-4-5.0U	B.4
1906271000	SAIL-M8G-4-10U	B.4
1906280100	SAIS-M23-12P-ST-1,0M	J.30
1906290100	SAIS-M23-12P-AN-1,0M	J.30
1906300000	SAIL-M12GM12G-4-X.XU	B.6
1906300030	SAIL-M12GM12G-4-0.3U	H.7
1906300050	SAIL-M12GM12G-4-0.5U	H.7
1906300150	SAIL-M12GM12G-4-1.5U	B.25
1906300150	SAIL-M12GM12G-4-1.5U	B.6
1906300150	SAIL-M12GM12G-4-1.5U	H.7
1906300300	SAIL-M12GM12G-4-3.0U	B.6
1906300500	SAIL-M12GM12G-4-5.0U	B.6
1906301000	SAIL-M12GM12G-4-10U	B.6
1906310000	SAIL-M12WM12W-4-X.XU	B.7
1906310150	SAIL-M12WM12W-4-1.5U	B.25
1906310150	SAIL-M12WM12W-4-1.5U	B.7
1906310300	SAIL-M12WM12W-4-3.0U	B.7
1906310500	SAIL-M12WM12W-4-5.0U	B.7
1906311000	SAIL-M12WM12W-4-10U	B.7
1906330000	SAIL-M12WM8W-3-X.XU	B.5
1906330150	SAIL-M12WM8W-3-1.5U	B.29
1906330150	SAIL-M12WM8W-3-1.5U	B.5
1906330300	SAIL-M12WM8W-3-3.0U	B.5
1906330500	SAIL-M12WM8W-3-5.0U	B.5
1906331000	SAIL-M12WM8W-3-10U	B.5
1906340000	SAIL-M12WM8W-4-X.XU	B.5
1906340150	SAIL-M12WM8W-4-1.5U	B.29
1906340150	SAIL-M12WM8W-4-1.5U	B.5
1906340300	SAIL-M12WM8W-4-3.0U	B.5
1906340500	SAIL-M12WM8W-4-5.0U	B.5
1906341000	SAIL-M12WM8W-4-10U	B.5
1906390000	SAIS-5/7-ZF	D.19
1906390000	SAIS-5/7-ZF	D.5
1906400150	SAIL-M8BW-4L1.5U	B.21
1906410000	SAIL-M12GM12W-4-2LX.XU	B.8
1906410150	SAIL-M12GM12W-4-2L1.5U	B.27
1906410150	SAIL-M12GM12W-4-2L1.5U	B.8
1906410300	SAIL-M12GM12W-4-2L3.0U	B.8
1906410500	SAIL-M12GM12W-4-2L5.0U	B.8
1906411000	SAIL-M12GM12W-4-2L10U	B.8
1906430150	SAIL-M12GM8W-4L1.5U	B.31
1906450150	SAIL-M8GM8W-4L1.5U	B.34
1906470150	SAIL-M12G-3S1.5U	B.17
1906480150	SAIL-M12G-4S1.5U	B.17
1906500150	SAIL-M12W-3S1.5U	B.17
1906520150	SAIL-M12W-5S1.5U	B.17
1906540150	SAIL-M12BW-5S1.5U	B.17
1906550000	SAI-AU M8 PB 16DI	F.10
1906550000	SAI-AU M8 PB 16DI	F.4
1906550000	SAI-AU M8 PB 16DI	F.8
1906560150	SAIL-M8G-3S1.5U	B.22
1906570150	SAIL-M8G-4S1.5U	B.22
1906580150	SAIL-M8W-3S1.5U	B.22
1906590150	SAIL-M8W-4S1.5U	B.22
1906600150	SAIL-M8BG-3S1.5U	B.22
1906610150	SAIL-M8BG-4S1.5U	B.22
1906620150	SAIL-M8BW-3S1.5U	B.22
1906630150	SAIL-M8BW-4S1.5U	B.22
1906640000	SAI-AU M8 PB 16DI/8DO	F.10
1906640000	SAI-AU M8 PB 16DI/8DO	F.4
1906640000	SAI-AU M8 PB 16DI/8DO	F.8
1906650000	SAI-AU M12 CAN 16DI	F.12
1906650000	SAI-AU M12 CAN 16DI	F.14
1906650000	SAI-AU M12 CAN 16DI	F.4
1906660000	SAI-AU M12 CAN 16DI/8DO	F.12
1906660000	SAI-AU M12 CAN 16DI/8DO	F.14
1906660000	SAI-AU M12 CAN 16DI/8DO	F.4
1906670000	SAI-AU M12 CAN AI/AO/DI	F.13
1906670000	SAI-AU M12 CAN AI/AO/DI	F.14
1906670000	SAI-AU M12 CAN AI/AO/DI	F.4
1906680000	SAI-AU M8 CAN 16DI	F.12
1906680000	SAI-AU M8 CAN 16DI	F.14
1906680000	SAI-AU M8 CAN 16DI	F.4
1906690000	SAI-AU M8 CAN 16DI/8DO	F.12
1906690000	SAI-AU M8 CAN 16DI/8DO	F.14
1906690000	SAI-AU M8 CAN 16DI/8DO	F.4
1906700000	SAI-AU M12 DN 16DI	F.16
1906700000	SAI-AU M12 DN 16DI	F.18
1906700000	SAI-AU M12 DN 16DI	F.4
1906710000	SAI-AU M12 DN 16DI/8DO	F.16
1906710000	SAI-AU M12 DN 16DI/8DO	F.18
1906710000	SAI-AU M12 DN 16DI/8DO	F.4
1906720000	SAI-AU M12 DN AI/AO/DI	F.17
1906720000	SAI-AU M12 DN AI/AO/DI	F.18
1906720000	SAI-AU M12 DN AI/AO/DI	F.4
1906730000	SAI-AU M8 DN 16DI	F.16
1906730000	SAI-AU M8 DN 16DI	F.18
1906730000	SAI-AU M8 DN 16DI	F.4
1906740000	SAI-AU M8 DN 16DI/8DO	F.16
1906740000	SAI-AU M8 DN 16DI/8DO	F.18
1906740000	SAI-AU M8 DN 16DI/8DO	F.4
1906950150	SAIL-M12BW-3S1.5U	B.17
1909500000	VG M16 - MS 1/EMV	C.81
1909860000	VG M16-1/K68	C.81
1909910000	VG M16-1/MS68	C.81

1910000000

Order No.	Type	Page
1910000000	Screwty Set	K.5
1912110150	SAIL-ZW-M12BW-3L1.5U	B.37
1912130000	ESG 8/13.5/43.3 SAI AU	F.10
1912130000	ESG 8/13.5/43.3 SAI AU	F.14
1912130000	ESG 8/13.5/43.3 SAI AU	F.18
1912130000	ESG 8/13.5/43.3 SAI AU	F.23
1912130000	ESG 8/13.5/43.3 SAI AU	F.25
1912130000	ESG 8/13.5/43.3 SAI AU	F.27
1912130000	ESG 8/13.5/43.3 SAI AU	F.37
1912130000	ESG 8/13.5/43.3 SAI AU	K.16
1915220000	SAI JP 4P LG	H.8
1916700150	SAIL-VSCD-M8G-3-1.5U	B.55
1917400000	SAI-TS35 MF	I.45
1918520000	SAI JP 5P LG	H.8
1919680000	PB SUB-D IDC TERM PS	C.15

1920000000

Order No.	Type	Page
1920000000	Screwty Set -DM	K.5
1920700000	SAIS 5/9-VA	C.31
1920700000	SAIS 5/9-VA	D.12
1920700000	SAIS 5/9-VA	I.31
1920700001	SAIS 5/9-VA D-COD	C.78
1920710000	SAIB 5/9-VA	C.31
1920710000	SAIB 5/9-VA	D.12
1920710000	SAIB 5/9-VA	I.31
1920720000	SAIS 5/9-VA-B-COD	C.11
1920720000	SAIS 5/9-VA-B-COD	D.12
1920720000	SAIS 5/9-VA-B-COD	I.31
1920730000	SAIB 5/9-VA-B-COD	C.11
1920730000	SAIB 5/9-VA-B-COD	D.12
1920730000	SAIB 5/9-VA-B-COD	I.31
1920970000	SAIBW-M8-3P(TL)	D.22
1920970000	SAIBW-M8-3P(TL)	D.6
1920980000	SAIBW-M8-4P(TL)	D.22
1920980000	SAIBW-M8-4P(TL)	D.6
1920990000	SAISW-M8-3P(TL)	D.22
1920990000	SAISW-M8-3P(TL)	D.6
1921000000	SAISW-M8-4P(TL)	D.22
1921000000	SAISW-M8-4P(TL)	D.6
1921010000	SAIBM-M8-3P(TL)	D.21
1921010000	SAIBM-M8-3P(TL)	D.6
1921020000	SAIBM-M8-4P(TL)	D.21
1921020000	SAIBM-M8-4P(TL)	D.6
1921030000	SAISM-M8-3P(TL)	D.21
1921030000	SAISM-M8-3P(TL)	D.6
1921040000	SAISM-M8-4P(TL)	D.21
1921040000	SAISM-M8-4P(TL)	D.6
1921050000	SAIS-5/7-(KV)	D.10
1921060000	SAIS-4/7-(KV)	D.10
1921070000	SAIB-5/7-(KV)	D.10
1921080000	SAIB-4/7-(KV)	D.10
1924940000	SAIB-3/7	D.5
1021490000	SAIS-12/9-(TL)	D.11
1924950000	SAIS-12/9-(TL)	D.5
1924960000	SAIB-12/9-(TL)	D.11
1924960000	SAIB-12/9-(TL)	D.5
1924970000	SAIB-5/7-ZF	D.19
1924970000	SAIB-5/7-ZF	D.5
1924980000	SAI-ASI T FFR	C.61
1925010000	SAI-ASI T FR	C.60
1925300000	SAIL-M12GM12G-3-X.XV	B.6
1925300150	SAIL-M12GM12G-3-1.5V	B.25
1925300150	SAIL-M12GM12G-3-1.5V	B.6
1925300300	SAIL-M12GM12G-3-3.0V	B.6
1925300500	SAIL-M12GM12G-3-5.0V	B.6
1925301000	SAIL-M12GM12G-3-10V	B.6
1925310000	SAIL-M12GM12G-4-X.XV	B.6
1925310150	SAIL-M12GM12G-4-1.5V	B.25
1925310150	SAIL-M12GM12G-4-1.5V	B.6
1925310300	SAIL-M12GM12G-4-3.0V	B.6
1925310500	SAIL-M12GM12G-4-5.0V	B.6
1925311000	SAIL-M12GM12G-4-10V	B.6
1925320000	SAIL-M12GM12G-5-X.XV	B.7
1925320150	SAIL-M12GM12G-5-1.5V	B.25
1925320150	SAIL-M12GM12G-5-1.5V	B.7
1925320300	SAIL-M12GM12G-5-3.0V	B.7
1925320500	SAIL-M12GM12G-5-5.0V	B.7
1925321000	SAIL-M12GM12G-5-10V	B.7
1925330150	SAIL-M12GM12G-2/4-1.5V	B.26
1925340000	SAIL-M12GM12W-3-X.XV	B.7
1925340150	SAIL-M12GM12W-3-1.5V	B.25
1925340150	SAIL-M12GM12W-3-1.5V	B.7
1925340300	SAIL-M12GM12W-3-3.0V	B.7
1925340500	SAIL-M12GM12W-3-5.0V	B.7
1925341000	SAIL-M12GM12W-3-10V	B.7
1925350000	SAIL-M12GM12W-4-X.XV	B.7
1925350150	SAIL-M12GM12W-4-1.5V	B.25
1925350150	SAIL-M12GM12W-4-1.5V	B.7
1925350300	SAIL-M12GM12W-4-3.0V	B.7
1925350500	SAIL-M12GM12W-4-5.0V	B.7
1925351000	SAIL-M12GM12W-4-10V	B.7
1925360000	SAIL-M12GM12W-5-X.XV	B.7
1925360150	SAIL-M12GM12W-5-1.5V	B.25
1925360150	SAIL-M12GM12W-5-1.5V	B.7
1925360300	SAIL-M12GM12W-5-3.0V	B.7
1925360500	SAIL-M12GM12W-5-5.0V	B.7
1925361000	SAIL-M12GM12W-5-10V	B.7
1925370150	SAIL-M12GM12W-2/4-1.5V	B.26
1925380000	SAIL-M12WM12W-3-X.XV	B.7
1925380150	SAIL-M12WM12W-3-1.5V	B.25
1925380150	SAIL-M12WM12W-3-1.5V	B.7
1925380300	SAIL-M12WM12W-3-3.0V	B.7
1925380500	SAIL-M12WM12W-3-5.0V	B.7
1925381000	SAIL-M12WM12W-3-10V	B.7
1925390000	SAIL-M12WM12W-4-X.XV	B.7
1925390150	SAIL-M12WM12W-4-1.5V	B.25
1925390150	SAIL-M12WM12W-4-1.5V	B.7
1925390300	SAIL-M12WM12W-4-3.0V	B.7
1925390500	SAIL-M12WM12W-4-5.0V	B.7
1925391000	SAIL-M12WM12W-4-10V	B.7
1925400000	SAIL-M12WM12W-5-X.XV	B.7
1925400150	SAIL-M12WM12W-5-1.5V	B.25
1925400150	SAIL-M12WM12W-5-1.5V	B.7
1925400300	SAIL-M12WM12W-5-3.0V	B.7
1925400500	SAIL-M12WM12W-5-5.0V	B.7
1925401000	SAIL-M12WM12W-5-10V	B.7
1925410000	SAIL-M12GM12W-3LX.XV	B.8
1925410150	SAIL-M12GM12W-3L1.5V	B.27
1925410150	SAIL-M12GM12W-3L1.5V	B.8
1925410300	SAIL-M12GM12W-3L3.0V	B.8
1925410500	SAIL-M12GM12W-3L5.0V	B.8
1925411000	SAIL-M12GM12W-3L10V	B.8
1925420000	SAIL-M12GM12W-4-2LX.XV	B.8
1925420150	SAIL-M12GM12W-4-2L1.5V	B.27
1925420150	SAIL-M12GM12W-4-2L1.5V	B.8
1925420300	SAIL-M12GM12W-4-2L3.0V	B.8
1925420500	SAIL-M12GM12W-4-2L5.0V	B.8
1925421000	SAIL-M12GM12W-4-2L10V	B.8
1925430000	SAIL-M12G-3-X.XV	B.4
1925430150	SAIL-M12G-3-1.5V	B.11
1925430150	SAIL-M12G-3-1.5V	B.4
1925430300	SAIL-M12G-3-3.0V	B.4
1925430500	SAIL-M12G-3-5.0V	B.4
1925431000	SAIL-M12G-3-10V	B.4
1925440000	SAIL-M12G-4-X.XV	B.4
1925440150	SAIL-M12G-4-1.5V	B.11
1925440150	SAIL-M12G-4-1.5V	B.4
1925440300	SAIL-M12G-4-3.0V	B.4
1925440500	SAIL-M12G-4-5.0V	B.4
1925441000	SAIL-M12G-4-10V	B.4
1925450000	SAIL-M12G-5-X.XV	B.4
1925450150	SAIL-M12G-5-1.5V	B.11
1925450150	SAIL-M12G-5-1.5V	B.4
1925450300	SAIL-M12G-5-3.0V	B.4
1925450500	SAIL-M12G-5-5.0V	B.4
1925451000	SAIL-M12G-5-10V	B.4
1925460000	SAIL-M12BW-3LX.XV	B.8
1925460150	SAIL-M12BW-3L1.5V	B.16
1925460150	SAIL-M12BW-3L1.5V	B.8
1925460300	SAIL-M12BW-3L3.0V	B.8
1925460500	SAIL-M12BW-3L5.0V	B.8
1925461000	SAIL-M12BW-3L10V	B.8
1925470000	SAIL-M12BW-4-2LX.XV	B.8
1925470150	SAIL-M12BW-4-2L1.5V	B.16
1925470150	SAIL-M12BW-4-2L1.5V	B.8
1925470300	SAIL-M12BW-4-2L3.0V	B.8
1925470500	SAIL-M12BW-4-2L5.0V	B.8
1925471000	SAIL-M12BW-4-2L10V	B.8
1925510000	SAIL-M12W-3-X.XV	B.4
1925510150	SAIL-M12W-3-1.5V	B.11
1925510150	SAIL-M12W-3-1.5V	B.4
1925510300	SAIL-M12W-3-3.0V	B.4
1925510500	SAIL-M12W-3-5.0V	B.4
1925511000	SAIL-M12W-3-10V	B.4
1925520000	SAIL-M12W-4-X.XV	B.4
1925520150	SAIL-M12W-4-1.5V	B.11
1925520150	SAIL-M12W-4-1.5V	B.4
1925520300	SAIL-M12W-4-3.0V	B.4
1925520500	SAIL-M12W-4-5.0V	B.4
1925521000	SAIL-M12W-4-10V	B.4
1925530000	SAIL-M12W-5-X.XV	B.4
1925530150	SAIL-M12W-5-1.5V	B.11
1925530150	SAIL-M12W-5-1.5V	B.4
1925530300	SAIL-M12W-5-3.0V	B.4
1925530500	SAIL-M12W-5-5.0V	B.4
1925531000	SAIL-M12W-5-10V	B.4
1925570000	SAIL-M12BG-3-X.XV	B.6
1925570150	SAIL-M12BG-3-1.5V	B.11
1925570150	SAIL-M12BG-3-1.5V	B.6
1925570300	SAIL-M12BG-3-3.0V	B.6
1925570500	SAIL-M12BG-3-5.0V	B.6
1925571000	SAIL-M12BG-3-10V	B.6
1925580000	SAIL-M12BG-4-X.XV	B.6
1925580150	SAIL-M12BG-4-1.5V	B.11
1925580150	SAIL-M12BG-4-1.5V	B.6
1925580300	SAIL-M12BG-4-3.0V	B.6
1925580500	SAIL-M12BG-4-5.0V	B.6
1925581000	SAIL-M12BG-4-10V	B.6
1925590000	SAIL-M12BG-5-X.XV	B.7
1925590150	SAIL-M12BG-5-1.5V	B.11
1925590150	SAIL-M12BG-5-1.5V	B.7
1925590300	SAIL-M12BG-5-3.0V	B.7
1925590500	SAIL-M12BG-5-5.0V	B.7
1925591000	SAIL-M12BG-5-10V	B.7
1925630000	SAIL-M12BW-3-X.XV	B.7
1925630150	SAIL-M12BW-3-1.5V	B.11
1925630150	SAIL-M12BW-3-1.5V	B.7
1925630300	SAIL-M12BW-3-3.0V	B.7
1925630500	SAIL-M12BW-3-5.0V	B.7
1925631000	SAIL-M12BW-3-10V	B.7
1925640000	SAIL-M12BW-4-X.XV	B.7

Order No.	Type	Page
1925640150	SAIL-M12BW-4-1.5V	B.11
1925640150	SAIL-M12BW-4-1.5V	B.7
1925640300	SAIL-M12BW-4-3.0V	B.7
1925640500	SAIL-M12BW-4-5.0V	B.7
1925641000	SAIL-M12BW-4-10V	B.7
1925650000	SAIL-M12BW-5-X.XV	B.7
1925650150	SAIL-M12BW-5-1.5V	B.11
1925650150	SAIL-M12BW-5-1.5V	B.7
1925650300	SAIL-M12BW-5-3.0V	B.7
1925650500	SAIL-M12BW-5-5.0V	B.7
1925651000	SAIL-M12BW-5-10V	B.7
1925870000	SAIBW-12/9-(TL)	D.11
1926690150	SAIL-M12G-5S1.5U	B.17
1927150000	SAIL-M8GM8G-3-X.XV	B.4
1927150150	SAIL-M8GM8G-3-1.5V	B.32
1927150150	SAIL-M8GM8G-3-1.5V	B.4
1927150300	SAIL-M8GM8G-3-3.0V	B.4
1927150500	SAIL-M8GM8G-3-5.0V	B.4
1927151000	SAIL-M8GM8G-3-10V	B.4
1927160000	SAIL-M8GM8G-4-X.XV	B.5
1927160150	SAIL-M8GM8G-4-1.5V	B.32
1927160150	SAIL-M8GM8G-4-1.5V	B.5
1927160300	SAIL-M8GM8G-4-3.0V	B.5
1927160500	SAIL-M8GM8G-4-5.0V	B.5
1927161000	SAIL-M8GM8G-4-10V	B.5
1927170000	SAIL-M8GM8W-3-X.XV	B.5
1927170150	SAIL-M8GM8W-3-1.5V	B.32
1927170150	SAIL-M8GM8W-3-1.5V	B.5
1927170300	SAIL-M8GM8W-3-3.0V	B.5
1927170500	SAIL-M8GM8W-3-5.0V	B.5
1927171000	SAIL-M8GM8W-3-10V	B.5
1927180000	SAIL-M8GM8W-4-X.XV	B.5
1927180150	SAIL-M8GM8W-4-1.5V	B.32
1927180150	SAIL-M8GM8W-4-1.5V	B.5
1927180300	SAIL-M8GM8W-4-3.0V	B.5
1927180500	SAIL-M8GM8W-4-5.0V	B.5
1927181000	SAIL-M8GM8W-4-10V	B.5
1927190000	SAIL-M8GM8W-3LX.XV	B.5
1927190150	SAIL-M8GM8W-3L1.5V	B.34
1927190150	SAIL-M8GM8W-3L1.5V	B.5
1927190300	SAIL-M8GM8W-3L3.0V	B.5
1927190500	SAIL-M8GM8W-3L5.0V	B.5
1927191000	SAIL-M8GM8W-3L10V	B.5
1927200150	SAIL-M8GM8W-4L1.5V	B.34
1927210000	SAIL-M8WM8W-3-X.XV	B.5
1927210150	SAIL-M8WM8W-3-1.5V	B.32
1927210150	SAIL-M8WM8W-3-1.5V	B.5
1927210300	SAIL-M8WM8W-3-3.0V	B.5
1927210500	SAIL-M8WM8W-3-5.0V	B.5
1927211000	SAIL-M8WM8W-3-10V	B.5
1927220000	SAIL-M8WM8W-4-X.XV	B.5
1927220150	SAIL-M8WM8W-4-1.5V	B.32
1927220150	SAIL-M8WM8W-4-1.5V	B.5
1927220300	SAIL-M8WM8W-4-3.0V	B.5
1927220500	SAIL-M8WM8W-4-5.0V	B.5
1927221000	SAIL-M8WM8W-4-10V	B.5
1927230000	SAIL-M8G-3-X.XV	B.4
1927230150	SAIL-M8G-3-1.5V	B.19
1927230150	SAIL-M8G-3-1.5V	B.4
1927230300	SAIL-M8G-3-3.0V	B.4
1927230500	SAIL-M8G-3-5.0V	B.4
1927231000	SAIL-M8G-3-10V	B.4
1927240000	SAIL-M8BGS-3-X.XV	B.4
1927240150	SAIL-M8BG-3-1.5V	B.19
1927240150	SAIL-M8BG-3-1.5V	B.4
1927240300	SAIL-M8BG-3-3.0V	B.4
1927240500	SAIL-M8BG-3-5.0V	B.4
1927241000	SAIL-M8BG-3-10V	B.4
1927250000	SAIL-M8G-4-X.XV	B.4
1927250150	SAIL-M8G-4-1.5V	B.19
1927250150	SAIL-M8G-4-1.5V	B.4
1927250300	SAIL-M8G-4-3.0V	B.4
1927250500	SAIL-M8G-4-5.0V	B.4
1927251000	SAIL-M8G-4-10V	B.4
1927260000	SAIL-M8BGS-4-X.XV	B.5
1927260150	SAIL-M8BG-4-1.5V	B.19
1927260150	SAIL-M8BG-4-1.5V	B.5
1927260300	SAIL-M8BG-4-3.0V	B.5
1927260500	SAIL-M8BG-4-5.0V	B.5
1927261000	SAIL-M8BG-4-10V	B.5
1927310000	SAIL-M8W-3-X.XV	B.4
1927310150	SAIL-M8W-3-1.5V	B.19
1927310150	SAIL-M8W-3-1.5V	B.4
1927310300	SAIL-M8W-3-3.0V	B.4
1927310500	SAIL-M8W-3-5.0V	B.4
1927311000	SAIL-M8W-3-10V	B.4
1927320000	SAIL-M8BWS-3-X.XV	B.5
1927320150	SAIL-M8BW-3-1.5V	B.19
1927320150	SAIL-M8BW-3-1.5V	B.5
1927320300	SAIL-M8BW-3-3.0V	B.5
1927320500	SAIL-M8BW-3-5.0V	B.5
1927321000	SAIL-M8BW-3-10V	B.5
1927330000	SAIL-M8W-4-X.XV	B.4
1927330150	SAIL-M8W-4-1.5V	B.19
1927330150	SAIL-M8W-4-1.5V	B.4
1927330300	SAIL-M8W-4-3.0V	B.4
1927330500	SAIL-M8W-4-5.0V	B.4
1927331000	SAIL-M8W-4-10V	B.4
1927340000	SAIL-M8BWS-4-X.XV	B.5

Order No.	Type	Page
1927340150	SAIL-M8BW-4-1.5V	B.19
1927340150	SAIL-M8BW-4-1.5V	B.5
1927340300	SAIL-M8BW-4-3.0V	B.5
1927340500	SAIL-M8BW-4-5.0V	B.5
1927341000	SAIL-M8BW-4-10V	B.5
1927350000	SAIL-M8BWS-3LX.XV	B.5
1927350150	SAIL-M8BW-3L1.5V	B.21
1927350150	SAIL-M8BW-3L1.5V	B.5
1927350300	SAIL-M8BW-3L3.0V	B.5
1927350500	SAIL-M8BW-3L5.0V	B.5
1927351000	SAIL-M8BW-3L10V	B.5
1927360150	SAIL-M8BW-4L1.5V	B.21

1930000000

1932380000	SAI-6-S 3P M8 L 0L	I.52
1933640000	SAII-PB-2X0.34-PVC	C.9
1934200000	PB SUB-D ZF TERM PS	C.15
1935610000	SAIBW-4/7-(KV)	D.10
1937950000	SAIL-M8GM12G-3-X.XU	B.6
1937950150	SAIL-M8GM12G-3-1.5U	B.6
1937950300	SAIL-M8GM12G-3-3.0U	B.6
1937950500	SAIL-M8GM12G-3-5.0U	B.6
1937951000	SAIL-M8GM12G-3-10U	B.6
1937960000	SAIL-M8GM12W-3-X.XU	B.7
1937960150	SAIL-M8GM12W-3-1.5U	B.7
1937960300	SAIL-M8GM12W-3-3.0U	B.7
1937960500	SAIL-M8GM12W-3-5.0U	B.7
1937961000	SAIL-M8GM12W-3-10U	B.7
1937970000	SAIL-M8WM12W-3-X.XU	B.7
1937970150	SAIL-M8WM12W-3-1.5U	B.7
1937970300	SAIL-M8WM12W-3-3.0U	B.7
1937970500	SAIL-M8WM12W-3-5.0U	B.7
1937971000	SAIL-M8WM12W-3-10U	B.7
1937980000	SAIL-M8GM12G-4-X.XU	B.6
1937980150	SAIL-M8GM12G-4-1.5U	B.6
1937980300	SAIL-M8GM12G-4-3.0U	B.6
1937980500	SAIL-M8GM12G-4-5.0U	B.6
1937981000	SAIL-M8GM12G-4-10U	B.6
1937990000	SAIL-M8GM12W-4-X.XU	B.7
1937990150	SAIL-M8GM12W-4-1.5U	B.7
1937990300	SAIL-M8GM12W-4-3.0U	B.7
1937990500	SAIL-M8GM12W-4-5.0U	B.7
1937991000	SAIL-M8GM12W-4-10U	B.7
1938000000	SAIL-M8WM12W-4-X.XU	B.7
1938000150	SAIL-M8WM12W-4-1.5U	B.7
1938000300	SAIL-M8WM12W-4-3.0U	B.7
1938000500	SAIL-M8WM12W-4-5.0U	B.7
1938001000	SAIL-M8WM12W-4-10U	B.7
1938170000	SAIL-M12GM8G-3-X.XV	B.4
1938170150	SAIL-M12GM8G-3-1.5V	B.29
1938170150	SAIL-M12GM8G-3-1.5V	B.4
1938170300	SAIL-M12GM8G-3-3.0V	B.4
1938170500	SAIL-M12GM8G-3-5.0V	B.4
1938171000	SAIL-M12GM8G-3-10V	B.4
1938180000	SAIL-M12GM8W-3-X.XV	B.5
1938180150	SAIL-M12GM8W-3-1.5V	B.29
1938180150	SAIL-M12GM8W-3-1.5V	B.5
1938180300	SAIL-M12GM8W-3-3.0V	B.5
1938180500	SAIL-M12GM8W-3-5.0V	B.5
1938181000	SAIL-M12GM8W-3-10V	B.5
1938190000	SAIL-M12WM8W-3-X.XV	B.5
1938190150	SAIL-M12WM8W-3-1.5V	B.29
1938190150	SAIL-M12WM8W-3-1.5V	B.5
1938190300	SAIL-M12WM8W-3-3.0V	B.5
1938190500	SAIL-M12WM8W-3-5.0V	B.5
1938191000	SAIL-M12WM8W-3-10V	B.5
1938200000	SAIL-M12GM8G-4-X.XV	B.5
1938200150	SAIL-M12GM8G-4-1.5V	B.29
1938200150	SAIL-M12GM8G-4-1.5V	B.5
1938200300	SAIL-M12GM8G-4-3.0V	B.5
1938200500	SAIL-M12GM8G-4-5.0V	B.5
1938201000	SAIL-M12GM8G-4-10V	B.5
1938210000	SAIL-M12GM8W-4-X.XV	B.5
1938210150	SAIL-M12GM8W-4-1.5V	B.29
1938210150	SAIL-M12GM8W-4-1.5V	B.5
1938210300	SAIL-M12GM8W-4-3.0V	B.5
1938210500	SAIL-M12GM8W-4-5.0V	B.5
1938211000	SAIL-M12GM8W-4-10V	B.5
1938220000	SAIL-M12WM8W-4-X.XV	B.5
1938220150	SAIL-M12WM8W-4-1.5V	B.29
1938220150	SAIL-M12WM8W-4-1.5V	B.5
1938220300	SAIL-M12WM8W-4-3.0V	B.5
1938220500	SAIL-M12WM8W-4-5.0V	B.5
1938221000	SAIL-M12WM8W-4-10V	B.5
1938230000	SAIL-M8GM12G-3-X.XV	B.6
1938230150	SAIL-M8GM12G-3-1.5V	B.6
1938230300	SAIL-M8GM12G-3-3.0V	B.6
1938230500	SAIL-M8GM12G-3-5.0V	B.6
1938231000	SAIL-M8GM12G-3-10V	B.6
1938240000	SAIL-M8GM12W-3-X.XV	B.7
1938240150	SAIL-M8GM12W-3-1.5V	B.7
1938240300	SAIL-M8GM12W-3-3.0V	B.7
1938240500	SAIL-M8GM12W-3-5.0V	B.7
1938241000	SAIL-M8GM12W-3-10V	B.7
1938250000	SAIL-M8WM12W-3-X.XV	B.7
1938250150	SAIL-M8WM12W-3-1.5V	B.7
1938250300	SAIL-M8WM12W-3-3.0V	B.7
1938250500	SAIL-M8WM12W-3-5.0V	B.7

Order No.	Type	Page
1938251000	SAIL-M8WM12W-3-10V	B.7
1938260000	SAIL-M8GM12G-4-X.XV	B.6
1938260150	SAIL-M8GM12G-4-1.5V	B.6
1938260300	SAIL-M8GM12G-4-3.0V	B.6
1938260500	SAIL-M8GM12G-4-5.0V	B.6
1938261000	SAIL-M8GM12G-4-10V	B.6
1938270000	SAIL-M8GM12W-4-X.XV	B.7
1938270150	SAIL-M8GM12W-4-1.5V	B.7
1938270300	SAIL-M8GM12W-4-3.0V	B.7
1938270500	SAIL-M8GM12W-4-5.0V	B.7
1938271000	SAIL-M8GM12W-4-10V	B.7
1938280000	SAIL-M8WM12W-4-X.XV	B.7
1938280150	SAIL-M8WM12W-4-1.5V	B.7
1938280300	SAIL-M8WM12W-4-3.0V	B.7
1938280500	SAIL-M8WM12W-4-5.0V	B.7
1938281000	SAIL-M8WM12W-4-10V	B.7
1938300000	SAI-SSA-PG7	D.42
1938550000	SAI-AU M12 PB GW 16DI	F.22
1938550000	SAI-AU M12 PB GW 16DI	F.23
1938550000	SAI-AU M12 PB GW 16DI	F.4
1938570000	SAI-AU M12 DN GW 16DI	F.24
1938570000	SAI-AU M12 DN GW 16DI	F.25
1938570000	SAI-AU M12 DN GW 16DI	F.4
1938600000	SAI-AU M8 SB 8DI	F.23
1938600000	SAI-AU M8 SB 8DI	F.25
1938600000	SAI-AU M8 SB 8DI	F.27
1938600000	SAI-AU M8 SB 8DI	F.28
1938600000	SAI-AU M8 SB 8DI	F.4
1938610000	SAI-AU M12 SB 8DI	F.23
1938610000	SAI-AU M12 SB 8DI	F.25
1938610000	SAI-AU M12 SB 8DI	F.27
1938610000	SAI-AU M12 SB 8DI	F.28
1938610000	SAI-AU M12 SB 8DI	F.4
1938630000	SAI-AU M8 SB 8DIO	F.23
1938630000	SAI-AU M8 SB 8DIO	F.25
1938630000	SAI-AU M8 SB 8DIO	F.27
1938630000	SAI-AU M8 SB 8DIO	F.28
1938630000	SAI-AU M8 SB 8DIO	F.4
1938640000	SAI-AU M12 SB 8DIO	F.23
1938640000	SAI-AU M12 SB 8DIO	F.25
1938640000	SAI-AU M12 SB 8DIO	F.27
1938640000	SAI-AU M12 SB 8DIO	F.28
1938640000	SAI-AU M12 SB 8DIO	F.4
1938660000	SAI-AU M8 SB 8DO 2A	F.23
1938660000	SAI-AU M8 SB 8DO 2A	F.25
1938660000	SAI-AU M8 SB 8DO 2A	F.27
1938660000	SAI-AU M8 SB 8DO 2A	F.28
1938660000	SAI-AU M8 SB 8DO 2A	F.4
1938668000	SAIL-M8WM12W-4-X.XV	F.4
1938680000	SAI-AU M12 SB 8DO 2A	F.23
1938680000	SAI-AU M12 SB 8DO 2A	F.25
1938680000	SAI-AU M12 SB 8DO 2A	F.27
1938680000	SAI-AU M12 SB 8DO 2A	F.28
1938690000	SAI-AU M12 SB 4AI	F.23
1938690000	SAI-AU M12 SB 4AI	F.25
1938690000	SAI-AU M12 SB 4AI	F.27
1938690000	SAI-AU M12 SB 4AI	F.29
1938690000	SAI-AU M12 SB 4AI	F.4
1938700000	SAI-AU M12 SB 4AO	F.23
1938700000	SAI-AU M12 SB 4AO	F.25
1938700000	SAI-AU M12 SB 4AO	F.27
1938700000	SAI-AU M12 SB 4AO	F.29
1938700000	SAI-AU M12 SB 4AO	F.4
1938710000	SAI-AU M12 SB 4PT100	F.23
1938710000	SAI-AU M12 SB 4PT100	F.25
1938710000	SAI-AU M12 SB 4PT100	F.27
1938710000	SAI-AU M12 SB 4PT100	F.32
1938710000	SAI-AU M12 SB 4PT100	F.4
1938720000	SAI-AU M12 SB 4Thermo	F.23
1938720000	SAI-AU M12 SB 4Thermo	F.25
1938720000	SAI-AU M12 SB 4Thermo	F.27
1938720000	SAI-AU M12 SB 4Thermo	F.31
1938720000	SAI-AU M12 SB 4Thermo	F.4
1938730000	SAI-AU M12 SB 2Counter	F.23
1938730000	SAI-AU M12 SB 2Counter	F.25
1938730000	SAI-AU M12 SB 2Counter	F.27
1938730000	SAI-AU M12 SB 2Counter	F.30
1938730000	SAI-AU M12 SB 2Counter	F.4
1939170000	SAI-SCREWTY TOOL BOX	K.6
1939180000	SAI-SCREWTY BOX	K.6
1939370150	SAIV-M12BW-2/4-1.5U	B.13
1939410150	SAIV-M12BG-2/4-1.5U	B.13

1940000000

1944570000	SAISW-M-5/8 M12 B-COD	C.12
1944570000	SAISW-M-5/8 M12 B-COD	D.17
1944570000	SAISW-M-5/8 M12 B-COD	D.5
1944580000	SAIBW-M-5/8 M12 B-COD	C.12
1944580000	SAIBW-M-5/8 M12 B-COD	D.17
1944580000	SAIBW-M-5/8 M12 B-COD	D.5
1948470150	SAIL-M8GM8GR-3-1.5U	B.33
1948480150	SAIL-M8GM8WR-3-1.5U	B.33
1948490150	SAIL-M8WM8WR-3-1.5U	B.33
1948500150	SAIL-M8GM8GR-4-1.5U	B.33
1948510150	SAIL-M8GM8WR-4-1.5U	B.33
1948520150	SAIL-M8WM8WR-4-1.5U	B.33
1948530150	SAIL-M8BGR-4-1.5U	B.20
1948540150	SAIL-M8BWR-4-1.5U	B.20

Order No.	Type	Page
1948650150	SAIL-M8GM8GR-3-1.5V	B.33
1948660150	SAIL-M8GM8WR-3-1.5V	B.33
1948670150	SAIL-M8WM8WR-3-1.5V	B.33
1948680150	SAIL-M8GM8GR-4-1.5V	B.33
1948690150	SAIL-M8GM8WR-4-1.5V	B.33
1948700150	SAIL-M8WM8WR-4-1.5V	B.33
1948710150	SAIL-M8BGR-3-1.5V	B.20
1948720150	SAIL-M8BWR-3-1.5V	B.20
1948730150	SAIL-M8BGR-4-1.5V	B.20
1948740150	SAIL-M8BWR-4-1.5V	B.20

1950000000

1950270000	SAIE-EW-M20/PG9-SW24-VA	C.33
1955340000	SAIEND CAN M8 4P	C.65
1955340000	SAIEND CAN M8 4P	F.23
1955340000	SAIEND CAN M8 4P	F.25
1955340000	SAIEND CAN M8 4P	F.27

1960000000

1962240000	SAI-AU M12 USB GW 8I8O	F.26
1962240000	SAI-AU M12 USB GW 8I8O	F.27
1962240000	SAI-AU M12 USB GW 8I8O	F.4
1962290150	SAIL-M12GM8W-3L1.5V	B.31
1962300150	SAIL-M12GM8W-4L1.5V	B.31
1962610000	SAISW-5/7-(KV)	D.10
1962620000	SAISW-4/7-(KV)	D.10
1962630000	SAIBW-5/7-(KV)	D.10
1962640000	SAI-ASI-L-M8-4I V3	C.59
1962650000	SAI-ASI-L-M8-8I V3	C.59
1962660000	SAI-ASI-L-M8-4O V3	C.59
1962670000	SAI-ASI-L-M8-4I/4O V3	C.59
1962680000	SAI-ASI-L-M12-4I V3	C.59
1962690000	SAI-ASI-L-M12-8I V3	C.59
1962700000	SAI-ASI-L-M12-4O V3	C.59
1962710000	SAI-ASI-L-M12-4I/4O V3	C.59
1963910150	SAIL-M12GM12W-4-3L1.5U	B.27
1963930150	SAIL-M12GM12W-4-3L1.5V	B.27
1963940150	SAIL-M12BW-4-3L1.5U	B.16
1963960150	SAIL-M12BW-4-3L1.5V	B.16
1964280150	SAIL-ZW-M12BW-2/4-1.5U	B.38
1964290150	SAIL-ZW-M12BW-2/4L1.5U	B.38
1964300150	SAIL-ZW-M8BW-3-1.5U	B.39
1964310150	SAIL-ZW-3-1.5U	B.18
1964690150	SAIL-M12BG-CD-1.5A	C.62
1964700150	SAIL-M12G-CD-1.5A	C.62
1964710150	SAIL-M12GM12G-CD-1.5A	C.63
1966170000	SAI AD 54	G.13
1966170000	SAI AD 54	G.6
1966180000	SAI BFSC M3x10	G.13
1966190000	SAI BP 54 KU	G.13
1966190000	SAI BP 54 KU	G.6
1966200000	SIBL GH SAI	G.13
1966200000	SIBL GH SAI	G.6
1968220000	SAI-AU M12 PB 8DI8DO 2A	F.10
1968220000	SAI-AU M12 PB 8DI8DO 2A	F.4
1968220000	SAI-AU M12 PB 8DI8DO 2A	F.8
1968560150	SAIL-M12BW-3-1.5T	B.11
1968570150	SAIL-M12BW-4-1.5T	B.11
1968580150	SAIL-M12BG-4-1.5T	B.11
1968590150	SAIL-M12BG-3-1.5T	B.11

1970000000

1975450000	SAI-AU M8 PB 8DI8DO 2A	F.10
1975450000	SAI-AU M8 PB 8DI8DO 2A	F.4
1975450000	SAI-AU M8 PB 8DI8DO 2A	F.8

1980000000

1981560000	Screwty M23	K.5
1981900030	SAIL-M8GM8G-4S-0.3Q-SB	C.65
1981900100	SAIL-M8GM8G-4S-1.0Q-SB	C.65
1981900150	SAIL-M8GM8G-4S-1.5U-SB	C.65
1981900300	SAIL-M8GM8G-4S-3.0Q-SB	C.65
1981900500	SAIL-M8GM8G-4S-5.0Q-SB	C.65
1981901000	SAIL-M8GM8G-4S-10Q-SB	C.65
1981901500	SAIL-M8GM8G-4S-15Q-SB	C.65
1981902000	SAIL-M8GM8G-4S-20Q-SB	C.65
1981910150	SAIL-M8BG-4S-1.5U-SB	C.65
1981910300	SAIL-M8BG-4S-3.0Q-SB	C.65
1981910500	SAIL-M8BG-4S-5.0Q-SB	C.65
1981911000	SAIL-M8BG-4S-10Q-SB	C.65
1984530150	SAIL-M12GM8GR-3-1.5U	B.30

1990000000

1995800000	SAI-M23-GS-L-7/12	J.26
1995810000	SAI-M23-BE-L-4/4	J.28
1995820000	SAI-M23-KBC-0.75/2.50	J.29
1995820000	SAI-M23-KBC-0.75/2.50	K.12
1995830000	SAI-M23-KBC-0.25/1.00	J.29
1995830000	SAI-M23-KBC-0.25/1.00	K.12
1995840000	SAI-M23-GS-7/12	J.12
1995850000	SAI-M23-BE-12	J.14
1995860000	SAI-M23-KBC-0.08/0.56	J.16
1995860000	SAI-M23-KBC-0.08/0.56	K.12
1995860000	SAI-M23-KBC-0.08/0.56	K.13

Order No.	Type	Page
2320000000		
2326170000	B KOTR M12 5P A BU SAI	G.10
2326170000	B KOTR M12 5P A BU SAI	G.13
2326170000	B KOTR M12 5P A BU SAI	G.6
2326170000	B KOTR M12 5P A BU SAI	G.9
2330000000		
2330260000	SAI-SK-M12-UNI	D.31
2330260000	SAI-SK-M12-UNI	F.10
2330260000	SAI-SK-M12-UNI	F.14
2330260000	SAI-SK-M12-UNI	F.18
2330260000	SAI-SK-M12-UNI	F.23
2330260000	SAI-SK-M12-UNI	F.25
2330260000	SAI-SK-M12-UNI	F.27
2330260000	SAI-SK-M12-UNI	F.37
2332380000	B KOTR M8 3P BU SAI	G.13
2332380000	B KOTR M8 3P BU SAI	G.7
2340000000		
2341480000	B KOTR M12 4P D BU SAI	G.10
2341480000	B KOTR M12 4P D BU SAI	G.13
2341480000	B KOTR M12 4P D BU SAI	G.6
2341480000	B KOTR M12 4P D BU SAI	G.9
2350000000		
2350590000	B KOTR B M12 4POL D BU	G.13
2350590000	B KOTR B M12 4POL D BU	G.7
2350600000	B KOTR B M12 5POL A BU	G.13
2350600000	B KOTR B M12 5POL A BU	G.7
2350610000	B KOTR B M12 5POL A SF	G.10
2350610000	B KOTR B M12 5POL A SF	G.13
2350610000	B KOTR B M12 5POL A SF	G.7
2350620000	B KOTR B M12 5POL B BU	G.13
2350620000	B KOTR B M12 5POL B BU	G.7
2350630000	B KOTR B M12 5POL B SF	G.13
2350630000	B KOTR B M12 5POL B SF	G.7
2350640000	B KOTR BUS M8 4POL BU	G.10
2350640000	B KOTR BUS M8 4POL BU	G.13
2350640000	B KOTR BUS M8 4POL BU	G.7
2350640000	B KOTR BUS M8 4POL BU	G.9
2350650000	B KOTR BUS M8 4POL SF	G.10
2350650000	B KOTR BUS M8 4POL SF	G.13
2350650000	B KOTR BUS M8 4POL SF	G.9
4290000000		
4294820000	1/4" Handgriff	K.5
4310000000		
4310920000	SAI BFSC M3x10	G.13
4310920000	SAI BFSC M3x10	G.6
4311000000	SAI O-RI 7.5X1.5 VI	G.10
4311000000	SAI O-RI 7.5X1.5 VI	G.13
4311000000	SAI O-RI 7.5X1.5 VI	G.6
4311000000	SAI O-RI 7.5X1.5 VI	G.9
4311430000	PTSC 25X12 WN5452	G.10
4311430000	PTSC 25X12 WN5452	G.6
4311430000	PTSC 25X12 WN5452	G.9
4312340000	SAI O-RI 5.0X0.8 NBR	G.10
4312340000	SAI O-RI 5.0X0.8 NBR	G.13
4312340000	SAI O-RI 5.0X0.8 NBR	G.6
4312340000	SAI O-RI 5.0X0.8 NBR	G.9
4320000000		
4322750000	GWHUE BUS M12 BU SAI	G.7
4322760000	GWHUE BUS M12 SF SAI	G.7
7910000000		
7915030000	SAI-8-F 5P 2M 0.5/1.0U	I.8
8390000000		
8395500000	PB-DP SUB-D	C.14
8420000000		
8425910000	POS-4P M12 PG13,5 300 mm	C.33
8425930000	POS-4P M12 M20 150mm	C.33
8425940000	POS-4P M12 M20 300mm	C.33
8425960000	SAI-SK-M12 BU	D.31
8426220000	FBCon M12 4P FM EMC	C.32
8426220000	FBCon M12 4P FM EMC	D.15
8426220000	FBCon M12 4P FM EMC	D.5
8460000000		
8460860000	PB-DP SUB-D TERM	C.15
8550000000		
8556460000	FBCon Term.D Ex FM	C.56
8560000000		
8564060000	FBCon PA CG/M12 1way	C.36
8564070000	FBCon PA CG/M12 2way	C.37
8564080000	FBCon PA CG/M12 4way	C.38
8564090000	FBCon PA CG 1way	C.36
8564100000	FBCon PA CG 2way	C.37
8564110000	FBCon PA CG 4way	C.38
8564150000	FBCon PA CG/M12 1way Ex	C.52
8564160000	FBCon PA CG/M12 2way Ex	C.53
8564170000	FBCon PA CG/M12 4way Ex	C.54
8564180000	FBCon PA CG 1way Ex	C.52
8564190000	FBCon PA CG 2way Ex	C.53
8564200000	FBCon PA CG 4way Ex	C.54
8564240000	FBCon PA CG 8way Ex	C.55
8564250000	FBCon PA CG/M12 8way Ex	C.55
8564290000	FBCon DP CG Term 24V	C.24
8564300000	FBCon PA CG 8way	C.39
8564310000	FBCon PA CG/M12 8way	C.39
8564330000	FBCon DP M12 Term 24V	C.24
8564340000	FBCon DP CG 1way	C.23
8564350000	FBCon DP M12 1way	C.23
8600000000		
8606180000	FBCon Term.D Ex FM/PEAN	C.56
8606190000	FBCon Term.D Ex	C.56
8606200000	FBCon Term.D Ex PEAN	C.56
8610000000		
8613670000	FBCon SS PCG 1way	C.36
8613680000	FBCon SS PCG 4way	C.38
8640000000		
8640720000	FBCon SS PCG 8way	C.39
8700000000		
8703430000	FBCon SS CG 1way	C.36
8703450000	FBCon SS CG 4way	C.38
8703470000	FBCon SS CG 8way	C.39
8710000000		
8714080000	FBCon PA CG/M12 1way OVP	C.41
8714090000	FBCon PA CG/M12 2way OVP	C.42
8714100000	FBCon PA CG/M12 4way OVP	C.43
8714110000	FBCon PA CG/M12 8way OVP	C.44
8714120000	FBCon PA CG 1way OVP	C.41
8714130000	FBCon PA CG 2way OVP	C.42
8714140000	FBCon PA CG 4way OVP	C.43
8714150000	FBCon PA CG 8way OVP	C.44
8714160000	FBCon PA CG/M12 1way Limiter	C.45
8714170000	FBCon PA CG/M12 2way Limiter	C.46
8714180000	FBCon PA CG/M12 4way Limiter	C.47
8714190000	FBCon PA CG/M12 8way Limiter	C.48
8714200000	FBCon PA CG 1way Limiter	C.45
8714210000	FBCon PA CG 2way Limiter	C.46
8714220000	FBCon PA CG 4way Limiter	C.47
8714230000	FBCon PA CG 8way Limiter	C.48
8714240000	FBCon SS DP PCG Term 24V	C.24
8714250000	FBCon SS DP M12 Term 24V	C.24
8714260000	FBCon SS DP PCG 1way	C.23
8714270000	FBCon SS DP M12 1way	C.23
8715260000	FBCon SS PCG 4way Limiter	C.47
8715270000	FBCon SS PCG 1way OVP	C.41
8720000000		
8726020000	FBCon SS CG/M12 1way	C.36
8726040000	FBCon SS CG/M12 4way	C.38
8726050000	FBCon SS CG/M12 8way	C.39
8726080000	FBCon SS PCG 4way OVP	C.43
8726090000	FBCon SS PCG 8way OVP	C.44
8726110000	FBCon SS PCG 1way Limiter	C.45
8726160000	FBCon SS PCG 8way Limiter	C.48
8770000000		
8771420000	JPR 24VDC 1CO M12	H.3
8771430000	JPR 24VDC ISO 1CO M12	H.3
8771440000	JPTA 50MS 24VDC PNP M12	H.4
8778490000	JP CLIP M	H.7
8780000000		
8788580000	RS PB-DP T SUB-D	C.25
8790000000		
8794080000	SAI JP 5P LG 100	H.8
8794090000	SAI JP 4P LG 100	H.8
8794120000	JP TEST	H.6
8800000000		
8800040000	RS PB-DP T	C.25
8830000000		
8836630000	JPTA100MS 24VDC PNP M12	H.4
8850000000		
8852350000	JPP NPN PNP 24VDC	H.5
8857030000	JPP PNP NPN 24VDC	H.5
9000000000		
9002650000	KT 8	K.7
9002660000	KT 12	K.7
9005000000	STRIPAX	K.9
9010000000		
9017330000	STRIPAX ZERT	K.9
9030000000		
9030060000	AM 12	C.69
9030060000	AM 12	C.70
9030060000	AM 12	C.73
9030060000	AM 12	C.74
9030060000	AM 12	K.8
9200000000		
9202210000	multi-stripax 6-16	K.11
9202250000	multi-stripax ASI	K.11
9202260000	AIE multi-stripax 6-16	K.11
9202300000	AIE multi-stripax ASI	K.11
9203070000	ERME MULTI-STRIPAX	K.11
9203100000	ERAN MULTI-STRIPAX	K.11
9203110000	STRIPPER 6-16 RED-LINE	K.8
9204350000	IE-CST	C.69
9204350000	IE-CST	C.70
9204350000	IE-CST	C.73
9204350000	IE-CST	C.74
9205760000	multi-stripax GKW LW	K.11
9205770000	AIE multi-stripax GKWLW	K.11
9450000000		
9455110000	AS-KG-GE	C.60
9455120000	AS-KG-SW	C.60
9455640000	FBCon M12 4P M EMC	C.32
9455640000	FBCon M12 4P M EMC	D.15
9455640000	FBCon M12 4P M EMC	D.5
9455650000	POS-4P M12 PG13,5 150mm	C.33
9456000000	SAI-4-S 4P M12	I.12
9456000000	SAI-4-S 4P M12	I.6
9456000001	SAI-4-S 5P M12	I.12
9456000001	SAI-4-S 5P M12	I.6
9456010000	SAI-6-S 4P M12	I.12
9456010000	SAI-6-S 4P M12	I.6
9456010001	SAI-6-S 5P M12	I.12
9456010001	SAI-6-S 5P M12	I.6
9456020000	SAI-8-S 4P M12	I.12
9456020000	SAI-8-S 4P M12	I.6
9456050000	SAI-SK-M12	C.59
9456050000	SAI-SK-M12	D.31
9456050000	SAI-SK-M12	F.10
9456050000	SAI-SK-M12	F.14
9456050000	SAI-SK-M12	F.18
9456050000	SAI-SK-M12	F.23
9456050000	SAI-SK-M12	F.25
9456050000	SAI-SK-M12	F.27
9456050000	SAI-SK-M12	F.37
9456070150	SAIL-VSBD-1.5U	B.48
9456100000	SAIL-M12G-4-X.XU	B.4
9456100150	SAIL-M12G-4-1.5U	B.11
9456100150	SAIL-M12G-4-1.5U	B.4
9456100300	SAIL-M12G-4-3.0U	B.4
9456100500	SAIL-M12G-4-5.0U	B.4
9456101000	SAIL-M12G-4-10U	B.4
9456140150	SAIL-M12BG-5S1.5U	B.17
9456150000	SAIL-M8BW-4-X.XU	B.5
9456150150	SAIL-M8BW-4-1.5U	B.19
9456150150	SAIL-M8BW-4-1.5U	B.5
9456150300	SAIL-M8BW-4-3.0U	B.5
9456150500	SAIL-M8BW-4-5.0U	B.5
9456151000	SAIL-M8BW-4-10U	B.5
9456170150	SAIL-VSCD-M12G-1.5U	B.49
9456180000	SAI-4-F 4P PUR 3M	I.8
9456190000	SAI-4-F 4P PUR 5M	I.6
9456190000	SAI-4-F 4P PUR 5M	I.8
9456190002	SAI-4-FMM-4P M12 5M	I.33
9456190002	SAI-4-FMM-4P M12 5M	I.34
9456190002	SAI-4-FMM-4P M12 5M	I.6
9456200000	SAI-4-F 4P PUR 10M	I.6
9456200000	SAI-4-F 4P PUR 10M	I.8
9456200002	SAI-4-FMM-4P M12 10M	I.33
9456200002	SAI-4-FMM-4P M12 10M	I.34
9456200002	SAI-4-FMM-4P M12 10M	I.6
9456210000	SAI-4-F 4P PUR 15M	I.6
9456210000	SAI-4-F 4P PUR 15M	I.8
9456230000	SAI-4-F 4P PUR 20M	I.6
9456230000	SAI-4-F 4P PUR 20M	I.8
9456240150	SAIL-VSCD-1.5U	B.49
9456320000	SAI-4-F 5P PUR 3M	I.8
9456330000	SAI-4-F 5P PUR 5M	I.6
9456330000	SAI-4-F 5P PUR 5M	I.8
9456340000	SAI-4-F 5P PUR 10M	I.6
9456340000	SAI-4-F 5P PUR 10M	I.8
9456350000	SAI-4-F 5P PUR 15M	I.6
9456350000	SAI-4-F 5P PUR 15M	I.8
9456370000	SAI-4-F 5P PUR 20M	I.6
9456370000	SAI-4-F 5P PUR 20M	I.8
9456380000	SAIL-M12BW-4-2LX.XU	B.8
9456380150	SAIL-M12BW-4-2L1.5U	B.16
9456380150	SAIL-M12BW-4-2L1.5U	B.8
9456380300	SAIL-M12BW-4-2L3.0U	B.8
9456380500	SAIL-M12BW-4-2L5.0U	B.8
9456381000	SAIL-M12BW-4-2L10U	B.8
9456460000	SAI-6-F 4P PUR 3M	I.8
9456470000	SAI-6-F 4P PUR 5M	I.6
9456470000	SAI-6-F 4P PUR 5M	I.8
9456480000	SAI-6-F 4P PUR 10M	I.6
9456480000	SAI-6-F 4P PUR 10M	I.8
9456490000	SAI-6-F 4P PUR 15M	I.6
9456490000	SAI-6-F 4P PUR 15M	I.8
9456500000	SAIL-M12WM12G-5-X.XU	B.7
9456500150	SAIL-M12WM12G-5-1.5U	B.7
9456500300	SAIL-M12WM12G-5-3.0U	B.7
9456500500	SAIL-M12WM12G-5-5.0U	B.7
9456501000	SAIL-M12WM12G-5-10U	B.7
9456510000	SAI-6-F 4P PUR 20M	I.6
9456510000	SAI-6-F 4P PUR 20M	I.8
9456600000	SAI-6-F 5P PUR 3M	I.8
9456610000	SAI-6-F 5P PUR 5M	I.6
9456610000	SAI-6-F 5P PUR 5M	I.8
9456620000	SAI-6-F 5P PUR 10M	I.6
9456620000	SAI-6-F 5P PUR 10M	I.8
9456630000	SAI-6-F 5P PUR 15M	I.6
9456630000	SAI-6-F 5P PUR 15M	I.8
9456650000	SAI-6-F 5P PUR 20M	I.6
9456650000	SAI-6-F 5P PUR 20M	I.8
9456660000	SAIL-M12GM8G-4-X.XU	B.5
9456660150	SAIL-M12GM8G-4-1.5U	B.29
9456660150	SAIL-M12GM8G-4-1.5U	B.5
9456660300	SAIL-M12GM8G-4-3.0U	B.5
9456660500	SAIL-M12GM8G-4-5.0U	B.5
9456661000	SAIL-M12GM8G-4-10U	B.5
9456670000	SAIL-M12GM8W-4-X.XU	B.5
9456670150	SAIL-M12GM8W-4-1.5U	B.29
9456670150	SAIL-M12GM8W-4-1.5U	B.5
9456670300	SAIL-M12GM8W-4-3.0U	B.5
9456670500	SAIL-M12GM8W-4-5.0U	B.5
9456671000	SAIL-M12GM8W-4-10U	B.5
9456690000	SAIL-M12W-3-X.XU	B.4
9456690150	SAIL-M12W-3-1.5U	B.11
9456690150	SAIL-M12W-3-1.5U	B.4
9456690300	SAIL-M12W-3-3.0U	B.4
9456690500	SAIL-M12W-3-5.0U	B.4
9456691000	SAIL-M12W-3-10U	B.4
9456740000	SAI-8-F 4P PUR 3M	I.8
9456750000	SAI-8-F 4P PUR 5M	I.6
9456750000	SAI-8-F 4P PUR 5M	I.8
9456750002	SAI-8-FMM-4P M12 5M	I.33
9456750002	SAI-8-FMM-4P M12 5M	I.34
9456750002	SAI-8-FMM-4P M12 5M	I.6
9456760000	SAI-8-F 4P PUR 10M	I.6
9456760000	SAI-8-F 4P PUR 10M	I.8
9456760002	SAI-8-FMM-4P M12 10M	I.33
9456760002	SAI-8-FMM-4P M12 10M	I.34
9456760002	SAI-8-FMM-4P M12 10M	I.6
9456770000	SAI-8-F 4P PUR 15M	I.6
9456770000	SAI-8-F 4P PUR 15M	I.8
9456790000	SAI-8-F 4P PUR 20M	I.6
9456790000	SAI-8-F 4P PUR 20M	I.8
9456880000	SAI-8-F 5P PUR 3M	I.8
9456890000	SAI-8-F 5P PUR 5M	I.6
9456890000	SAI-8-F 5P PUR 5M	I.8
9456900000	SAI-8-F 5P PUR 10M	I.6
9456900000	SAI-8-F 5P PUR 10M	I.8
9456910000	SAI-8-F 5P PUR 15M	I.6
9456910000	SAI-8-F 5P PUR 15M	I.8
9456930000	SAI-8-F 5P PUR 20M	I.6
9456930000	SAI-8-F 5P PUR 20M	I.8
9456940000	SAIS-5/7	D.5
9456940000	SAIS-5/7	D.8
9456950000	SAISW-5/7	D.5
9456950000	SAISW-5/7	D.8
9456990150	SAIL-M12GM12G-2/4-1.5U	B.26
9457040000	SAIL-VSA-M12G-1.5U	B.47
9457230000	SAIL-M12GM12G-3-X.XU	B.6
9457230150	SAIL-M12GM12G-3-1.5U	B.25
9457230150	SAIL-M12GM12G-3-1.5U	B.6
9457230300	SAIL-M12GM12G-3-3.0U	B.6
9457230500	SAIL-M12GM12G-3-5.0U	B.6
9457231000	SAIL-M12GM12G-3-10U	B.6
9457240000	SAIB-4/7	D.5
9457240000	SAIB-4/7	D.7
9457250000	SAIB-5/7	D.5
9457250000	SAIB-5/7	D.8
9457260000	SAIBW-5/7	D.5

Order No.	Type	Page
9457260000	SAIBW-5/7	D.8
9457270000	SAIL-M12GM12W-5-X.XU	B.7
9457270150	SAIL-M12GM12W-5-1.5U	B.25
9457270150	SAIL-M12GM12W-5-1.5U	B.7
9457270300	SAIL-M12GM12W-5-3.0U	B.7
9457270500	SAIL-M12GM12W-5-5.0U	B.7
9457271000	SAIL-M12GM12W-5-10U	B.7
9457290000	SAISW-4/7	D.5
9457290000	SAISW-4/7	D.7
9457310000	SAIL-M12GM12W-4-X.XU	B.7
9457310150	SAIL-M12GM12W-4-1.5U	B.25
9457310150	SAIL-M12GM12W-4-1.5U	B.7
9457310300	SAIL-M12GM12W-4-3.0U	B.7
9457310500	SAIL-M12GM12W-4-5.0U	B.7
9457311000	SAIL-M12GM12W-4-10U	B.7
9457320000	SAIL-M12BW-3-X.XU	B.7
9457320150	SAIL-M12BW-3-1.5U	B.11
9457320150	SAIL-M12BW-3-1.5U	B.7
9457320300	SAIL-M12BW-3-3.0U	B.7
9457320500	SAIL-M12BW-3-5.0U	B.7
9457321000	SAIL-M12BW-3-10U	B.7
9457340000	SAIL-M12GM12G-5-X.XU	B.7
9457340030	SAIL-M12GM12G-5-0.3U	H.7
9457340060	SAIL-M12GM12G-5-0.6U	H.7
9457340150	SAIL-M12GM12G-5-1.5U	B.25
9457340150	SAIL-M12GM12G-5-1.5U	B.7
9457340150	SAIL-M12GM12G-5-1.5U	H.7
9457340300	SAIL-M12GM12G-5-3.0U	B.7
9457340500	SAIL-M12GM12G-5-5.0U	B.7
9457341000	SAIL-M12GM12G-5-10U	B.7
9457350000	SAI-8-MF 5P PUR 5M 0L	I.44
9457380000	SAIL-M8BWS-3-X.XU	B.5
9457380150	SAIL-M8BW-3-1.5U	B.19
9457380150	SAIL-M8BW-3-1.5U	B.5
9457380300	SAIL-M8BW-3-3.0U	B.5
9457380500	SAIL-M8BW-3-5.0U	B.5
9457381000	SAIL-M8BW-3-10U	B.5
9457390000	SAIL-M12GM12W-3-X.XU	B.7
9457390150	SAIL-M12GM12W-3-1.5U	B.25
9457390150	SAIL-M12GM12W-3-1.5U	B.7
9457390300	SAIL-M12GM12W-3-3.0U	B.7
9457390500	SAIL-M12GM12W-3-5.0U	B.7
9457391000	SAIL-M12GM12W-3-10U	B.7
9457400150	SAIL-VSC-M12G-1.5U	B.49
9457410150	SAIL-ZW-M8BW-3L1.5U	B.39
9457420000	SAIH-SLL-3x0,75-8x0,34	B.57
9457430000	SAI-8-MF 5P PUR 10m	I.44
9457450000	SAIL-M8BGS-3-X.XU	B.4
9457450150	SAIL-M8BG-3-1.5U	B.19
9457450150	SAIL-M8BG-3-1.5U	B.4
9457450300	SAIL-M8BG-3-3.0U	B.4
9457450500	SAIL-M8BG-3-5.0U	B.4
9457451000	SAIL-M8BG-3-10U	B.4
9457460000	SAIL-M8BW-3LX.XU	B.5
9457460150	SAIL-M8BW-3L1.5U	B.21
9457460150	SAIL-M8BW-3L1.5U	B.5
9457460300	SAIL-M8BW-3L3.0U	B.5
9457460500	SAIL-M8BW-3L5.0U	B.5
9457461000	SAIL-M8BW-3L10U	B.5
9457490150	SAIL-ZW-M8BG-3-1.5U	B.39
9457540000	SAIS-ZW-5	D.30
9457550000	SAIS-4/7	D.5
9457550000	SAIS-4/7	D.7
9457560000	SAIH-SLL-3X0.75-16X0.34	B.57
9457570150	SAIL-M12GM8WR-3-1.5U	B.30
9457590000	SAI-8-F 5P 5M 0.5/1.0U	I.8
9457600000	SAI-8-F 5P 10M 0.5/1.0U	I.8
9457610000	SAIL-M12G-5-X.XU	B.4
9457610150	SAIL-M12G-5-1.5U	B.11
9457610150	SAIL-M12G-5-1.5U	B.4
9457610300	SAIL-M12G-5-3.0U	B.4
9457610500	SAIL-M12G-5-5.0U	B.4
9457611000	SAIL-M12G-5-10U	B.4
9457670000	SAIL-M12W-5-X.XU	B.4
9457670150	SAIL-M12W-5-1.5U	B.11
9457670150	SAIL-M12W-5-1.5U	B.4
9457670300	SAIL-M12W-5-3.0U	B.4
9457670500	SAIL-M12W-5-5.0U	B.4
9457671000	SAIL-M12W-5-10U	B.4
9457680150	SAIL-VSB-M12G-1.5U	B.48
9457690000	SAIL-M12BW-5-X.XU	B.7
9457690150	SAIL-M12BW-5-1.5U	B.11
9457690150	SAIL-M12BW-5-1.5U	B.7
9457690300	SAIL-M12BW-5-3.0U	B.7
9457690500	SAIL-M12BW-5-5.0U	B.7
9457691000	SAIL-M12BW-5-10U	B.7
9457700000	SAIBW-4/7	D.5
9457700000	SAIBW-4/7	D.7
9457710150	SAIL-VSA-1.5U	B.47
9457720000	SAI-SA-3-IDC	I.26
9457730000	SAIL-M12BG-4-X.XU	B.6
9457730150	SAIL-M12BG-4-1.5U	B.11
9457730150	SAIL-M12BG-4-1.5U	B.6
9457730300	SAIL-M12BG-4-3.0U	B.6
9457730500	SAIL-M12BG-4-5.0U	B.6
9457731000	SAIL-M12BG-4-10U	B.6
9457740000	SAIL-M12GM12G-5-X.XU	B.7
9457740150	SAIL-M12BW-4-1.5U	B.11
9457740150	SAIL-M12BW-4-1.5U	B.7

Order No.	Type	Page
9457740300	SAIL-M12BW-4-3.0U	B.7
9457740500	SAIL-M12BW-4-5.0U	B.7
9457741000	SAIL-M12BW-4-10U	B.7
9457760000	SAIL-M12GM8W-3LX.XU	B.5
9457760150	SAIL-M12GM8W-3L1.5U	B.31
9457760150	SAIL-M12GM8W-3L1.5U	B.5
9457760300	SAIL-M12GM8W-3L3.0U	B.5
9457760500	SAIL-M12GM8W-3L5.0U	B.5
9457761000	SAIL-M12GM8W-3L10U	B.5
9457770000	SAIL-M12GM8G-3-X.XU	B.4
9457770150	SAIL-M12GM8G-3-1.5U	B.29
9457770150	SAIL-M12GM8G-3-1.5U	B.4
9457770300	SAIL-M12GM8G-3-3.0U	B.4
9457770500	SAIL-M12GM8G-3-5.0U	B.4
9457771000	SAIL-M12GM8G-3-10U	B.4
9457780150	SAIL-VSBD-M12G-1.5U	B.48
9457790000	SAIL-M12GM12W-3LX.XU	B.8
9457790150	SAIL-M12GM12W-3L1.5U	B.27
9457790150	SAIL-M12GM12W-3L1.5U	B.8
9457790300	SAIL-M12GM12W-3L3.0U	B.8
9457790500	SAIL-M12GM12W-3L5.0U	B.8
9457791000	SAIL-M12GM12W-3L10U	B.8
9457800000	SAIL-M12BW-3LX.XU	B.8
9457800150	SAIL-M12BW-3L1.5U	B.16
9457800150	SAIL-M12BW-3L1.5U	B.8
9457800300	SAIL-M12BW-3L3.0U	B.8
9457800500	SAIL-M12BW-3L5.0U	B.8
9457801000	SAIL-M12BW-3L10U	B.8
9457810000	SAIL-M12G-3-X.XU	B.4
9457810150	SAIL-M12G-3-1.5U	B.11
9457810150	SAIL-M12G-3-1.5U	B.4
9457810300	SAIL-M12G-3-3.0U	B.4
9457810500	SAIL-M12G-3-5.0U	B.4
9457811000	SAIL-M12G-3-10U	B.4
9457820000	SAIL-M12BG-3-X.XU	B.6
9457820150	SAIL-M12BG-3-1.5U	B.11
9457820150	SAIL-M12BG-3-1.5U	B.6
9457820300	SAIL-M12BG-3-3.0U	B.6
9457820500	SAIL-M12BG-3-5.0U	B.6
9457821000	SAIL-M12BG-3-10U	B.6
9457850150	SAIL-M8BG-4-1.5U	B.19
9457850150	SAIL-M8BG-4-1.5U	B.5
9457850300	SAIL-M8BG-4-3.0U	B.5
9457850500	SAIL-M8BG-4-5.0U	B.5
9457851000	SAIL-M8BG-4-10U	B.5
9457890150	SAIL-M12GM12W-2/4-1.5U	B.26
9457900000	SAIL-M12WM12W-5-X.XU	B.7
9457900150	SAIL-M12WM12W-5-1.5U	B.25
9457900150	SAIL-M12WM12W-5-1.5U	B.7
9457900300	SAIL-M12WM12W-5-3.0U	B.7
9457900500	SAIL-M12WM12W-5-5.0U	B.7
9457901000	SAIL-M12WM12W-5-10U	B.7
9457910000	SAIL-M12BG-5-X.XU	B.7
9457910150	SAIL-M12BG-5-1.5U	B.11
9457910150	SAIL-M12BG-5-1.5U	B.7
9457910300	SAIL-M12BG-5-3.0U	B.7
9457910500	SAIL-M12BG-5-5.0U	B.7
9457911000	SAIL-M12BG-5-10U	B.7
9457920150	SAIL-VSC-1.5U	B.49
9457930150	SAIL-VSB-1.5U	B.48
9457950150	SAIV-M12BG-4-1.5U	B.13
9457960150	SAIV-M12BW-4-1.5U	B.13
9457970000	SAIH-SLL-5X0,75-16X0,34	B.57
9457980000	SAIL-M12GM8W-3-X.XU	B.5
9457980150	SAIL-M12GM8W-3-1.5U	B.29
9457980150	SAIL-M12GM8W-3-1.5U	B.5
9457980300	SAIL-M12GM8W-3-3.0U	B.5
9457980500	SAIL-M12GM8W-3-5.0U	B.5
9457981000	SAIL-M12GM8W-3-10U	B.5

Addresses worldwide

AE United Arab Emirates
Weidmuller Middle East FZE
P.O. Box 8591, SAIF-Zone
Sharjah U. A. E.
Phone +971 6 5572723
Fax +971 6 5572724
wme.info@weidmueller.com

AR Argentina
CPI SA
Bauness 2660
1431 Buenos Aires
Phone +54 11 45238008
Fax +54 11 45220546
info@cpi.com.ar
www.cpi.com.ar

AT Austria
Weidmüller GmbH Austria
Straße 2, Industriezentrum Nö
Süd Straße 2b M59
2355 Wiener Neudorf
Phone +43 2236 6708-0
Fax +43 2236 6708-199
office.at@weidmueller.com

AU Australia
Weidmüller Pty. Ltd.
P.O.Box 6944
Huntingwood Drive 43
Huntingwood,
NSW, 2148
Phone +61 2 9671-9999
Fax +61 2 9671-9911
info@weidmuller.com.au
www.weidmuller.com.au

AZ Azerbaijan
West Industries Ltd.
Caspian Plaza, 5-th Floor
44 J. Jabbarly Str., Baku
Phone +99412 596 15 15
Fax +99412 596 14 93
sales@west-i.com

BA Bosnia and Herzegovina
Representative Office
Weidmüller Interface
GmbH & Co. KG
Beograd-Stari Grad
Danice Marković 2
11050 Beograd
Srbija
Phone +381 11 288 5274
Fax +381 11 288 5274
zoran.rabrenovic@
weidmueller.com

BH ES ELEKTROSISTEM d.o.o.
Bul. Vojvode S.
Stepanovica kod br. 272
78000 BiH - Banja Luka
Phone +387 51 420-340
Fax +387 51 420-341
elsist@inecco.net
www.elektrosistem.ba

BE Belgium
Weidmüller Benelux B.V.
Mechelsesteenweg 519 bus
6 en 7
1930 Nossegem
Phone +32 2 752 4070
Fax +32 2 751 3606
info@weidmueller.be
www.weidmueller.be

BG Bulgaria
Weid-Bul EOOD
1756 Sofia
13, bul. "Kliment Ohridski"
Phone +359 2 9632560
Fax +359 2 9631098
sofia@weidbul.com
www.weidbul.com

BH Bahrain
Khayber Trading Company
P.O. Box 1976 Manama,
Phone +973 720747
Fax +973 720331
khayber@batelco.com.bh

BR Brazil
Weidmüller Conexel do Brasil
Conexões Elétricas Ltda.
Rua Garcia Lorca, 176
09695-900, Sao Paulo SP
Phone +55 11 43669600
Fax +55 11 43621677
vendas@weidmueller.com.br
www.weidmueller.com.br

BY Belarus
Technikon Ltd.
Nezavisimosti pr.177-9
Minsk 220125
Phone +375 17 3931177
Fax +375 17 3930080
wm@technikon.by

CA Canada
W Interconnections CANADA
Ltd.
10 Spy Court, Markham,
Ontario L3 R5 H6
Phone +1 905 475-1507
Fax +1 905 475-2798
info1@weidmuller.ca
www.weidmuller.ca

CH Switzerland
Weidmüller Schweiz AG
Rundbuckstraße 2
8212 Neuhausen am Rheinfall
Phone +41 52 6740707
Fax +41 52 6740708
info@weidmueller.ch
www.weidmueller.ch

CL Chile
Felipe Bahamondes S.A./
ATS AGRO
Maria Luisa Santander 0475
Casilla 3425
Santiago
Phone +56 2 341-1271
Fax +56 2 341-1275
felipe@atsintech.com

CPI CHILE LTDA
Av. Presidente Frei Montalva
6001-47, Conchali -
Region Metropolitana -
Santiago
cpi@cpichile.cl

CN China
Weidmüller Interface
International Trading
(Shanghai) Co., Ltd.
25F, BM Intercontinental
Business Center,
100 Yutong Road,Shanghai
200070
P.R. China
Phone +86 21 22195008
Fax +86 21 22195009
www.cnweidmuller.com

CO Colombia
Automatización Avanzada S. A.
Carrera 97 No.24c, 23 B4
4 Bogotá D. C.
Phone +57 1 5478510
Fax +57 1 4223044
comercial@
automatizacionavanzada.com
www.
automatizacionavanzada.com

CR Costa Rica
ELVATRON S.A.
la Uruca 400 Norte
Banco Costa Rica
San José Costa Rica
Phone +506 2 961060
Fax +506 5 200609
dirk.haase@elvatron.com
www.elvatron.com

CZ Czech Republic
Weidmüller s. r. o.
Lomnického 5/1705
14000 Praha 4
Phone +420 2 44001400
Fax +420 2 44001499
office@weidmueller.cz
www.weidmueller.cz

DE Germany
Weidmüller GmbH & Co. KG
Postfach 3054
32720 Detmold
Ohmstraße 9
32758 Detmold
Phone +49 5231 1428-0
Fax +49 5231 1428-116
weidmueller@weidmueller.de
www.weidmueller.de

DK Denmark
Wexøe A/S
Lejrvej 31
3500 Vaerloese
Phone +45 45465800
Fax +45 45465801
wexoe@wexoe.dk
www.wexoe.dk

EC Ecuador
Elsystec S. A. Electricidad
Sistemas y Tecnología
Vasco de Contreras N35-25
y Mañosca, Quito
Phone +593 2 2456510
Fax +593 2 2456755
Elsystec@uio.satnet.net

EE Estonia
Representative Office
Weidmüller Interface
GmbH & Co. KG
Udens str. 12-118
Riga, LV-1007
Latvia
Phone +371 29254766
Fax +371 67624562
ilgonis.rudaks@
weidmueller.com

Soots Interface OÜ
Pärnu mnt 142
11317 Tallinn
Phone +372 5296177
Fax +372 6096933
info@sootsinterface.ee
www.sootsinterface.ee

EG Egypt
Standard Electric (OMEGA)
87, Mohamed Farid Street
Heliopolis, Cairo
Phone +20 26422977
Fax +20 26422955
stdelec@rite.com

ES Spain
Weidmüller S. A.
Narcis Monturiol 11-13
Pol. Ind. Sudoeste
08960 Sant Just Desvern
Barcelona
Phone +34 93 4803386
Fax +34 93 3718055
weidmuller@weidmuller.es
www.weidmuller.es

FI Finland
JUHA-ELEKTRO OY
P. O. Box 57, 641 Helsinki
Kylvöpolku 6, 680 Helsinki
Phone +358 10 8328 100
Fax +358 10 8328 109
info@juha-elektro.fi
www.juha-elektro.fi

FR France
Weidmüller E. U. R. L.
12, Chaussée Jules César
B.P. 263 Osny
95523 Cergy Pontoise Cedex
Phone +33 1 34245500
Fax +33 1 34245501
mail@weidmuller.fr

GB Great Britain
Weidmüller Ltd
Klippon House
Centurion Court Office
Meridian East, Meridian
Business Park
Leicester, LE19 1TP
Phone +44 1162 823470
Fax +44 1162 893582
marketing@weidmuller.co.uk
www.weidmuller.co.uk

GR Greece
Electrorama S.A.
1 An. Martali Str.
41335 Larissa
Phone +30 2410 552533188
Fax +30 2410 283463189
valvizos@electrorama.com.gr

GA Contact Solutions
11, Ippokratous Str.
14452 Metamorfosi Attika
Phone +30 210 2823233
Fax +30 210 2823233
gasaless@gmail.com

HK Hong Kong
Weidmüller (Hong Kong)
Limited
Unit 1617, The Metropolis
Tower, No.10, Metropolis
Drive, Hunghom, Kowloon
Phone +852 31548082
Fax +852 31548099
info-hk@weidmueller.de
Hong Kong

HR Croatia
Elektro Partner d.o.o.
Slavonska Avenija 24/6
10000 Zagreb
Phone +385 1 6184793
Fax +385 1 6184795
elektropartner@zg.t-com.hr

HU Hungary
Weidmüller Kft
Gubacsi út 6
1097 Budapest
Phone +36 1 3827700
Fax +36 1 3827701
info@weidmueller.hu

ID Indonesia
PT. Nego Electrindo
Ruko Mega Grosir Cempaka
Mas, Blok I No 20 – 22
Jl. Let.Jend. Suprato –
Jakarta 10640
Phone +62 21 42882255
Fax +62 21 42882266
sales@negoelectrindo.co.id

IE Ireland
Please contact
Weidmüller Ltd.
in Great Britain

IL Israel
A.U.Shay Ltd.
P.O. Box 10049
Embar Street 23/25
49222 Petach-Tikva
Phone +972 3 9233601
Fax +972 3 9234601

ATEKA Ltd.
4, Ha'Tavor lane
Industrial area Segula
49691 Petach-Tikva
Phone +972 73 2001311
Fax +972 3 9244245
marketing@ateka.co.il
www.ateka.co.il

IN India
Weidmuller
Electronics India Pvt. Ltd
Plot # 32, 3rd Floor,
North Court
Lane North Avenue,
Opp Jogger's Park
Kalyani Nagar, Maharastra
411006 Pune
Phone +91 9049800960
Nitish.Rajan@weidmueller.de

IS Iceland
Samey Automation Center
Lyngas 13, 210 Garoabaer,
Phone +354 510 5200
Fax +354 510 5201
samey@samey.is

IT Italy
Weidmüller S.R.L.
Via Albert Einstein 4
20092 Cinisello Balsamo
Milano
Phone +39 02 660681
Fax +39 02 6124945
weidmuller@weidmuller.it
www.weidmuller.it

JO Jordan
HORIZONS
P.O.Box: 330607
Amman Jordan 11133
Phone +962 6 4882114
Fax +962 6 4882115
horizons@go.com.jo

JP Japan
Nihon Weidmüller Co. Ltd.
Sphere Tower Tennoz,
2-2-8 Higashi-Shinagawa,
Shinagawa-Ku,
Tokyo 140-0002
Phone +81 3 6711-5300
Fax +81 3 6711-5333
www.weidmuller.co.jp

KR Korea
Weidmuller Korea Co. Ltd.
6F Seokyoung B/D,
242-54 Nonhyun-dong,
Gangnam-gu
Seoul, 135-830
Phone +82 2 5160003
Fax +82 2 5160090
info@weidmuller.co.kr

KW Kuwait
KANA CONTROLS General
Trading & Cont. CO. W.L.L.
Al Rai Industrial Area,
Plot 28-30, St. 31
P.O.Box: 25593
Safat, 13016
Phone +966-474 1373/4
Fax +966-474 1537
info@kanacontrols.com

LB Lebanon
Progress Engineering &
Trading Enterprises
Al Nahr Street, Beirut
Phone +961 1 444664
Fax +961 1 561880
progress@inco.com.lb

LT Lithuania
Representative Office
Weidmüller Interface
GmbH & Co. KG
Udens str. 12-118
Riga, LV-1007
Latvia
Phone +371 29254766
Fax +371 67624562
ilgonis.rudaks@
weidmueller.com

ELEKTROS IRANGA
Tinklu g.29a, 5319 Panevezys
Phone +370 45582828
Fax +370 45582727
info@eliranga.lt

LU Luxembourg
Please contact
Weidmüller Benelux B.V.
in the Netherlands

LV Latvia
Representative Office
Weidmüller Interface
GmbH & Co. KG
Udens str. 12-118
Riga, LV-1007
Latvia
Phone +371 29254766
Fax +371 67624562
ilgonis.rudaks@
weidmueller.com

SIA "ABI4"
Daugavgrivas str. 31b
1007 Riga
Phone +371 67470999
Fax +371 67465637
abi_4@tvnet.lv

MD Moldova
BERHORD A&D srl
44, srt. Sarmizegetusa 37/3
Off 414. b-dul Decebal, 3,
Chisinau, MD 2001
Phone +373 22 507137
Fax +373 22 507134
atiuleanu@berhord.com

ME Montenegro
Representative Office
Weidmüller Interface
GmbH & Co. KG
Beograd-Stari Grad
Danice Marković 2
11050 Beograd
Srbija
Phone +381 11 288 5274
Fax +381 11 288 5274
zoran.rabrenovic@
weidmueller.com

MK Macedonia
Representative Office
Weidmüller Interface
GmbH & Co. KG
Beograd-Stari Grad
Danice Marković 2
11050 Beograd
Srbija
Phone +381 11 288 5274
Fax +381 11 288 5274
zoran.rabrenovic@
weidmueller.com

ELEKTRO – SMK dooel
UL. III Makedonska brigada b.b.
1000 Skopje
Phone +389 22 460 295
Fax +389 22 460 298
Elektro-smk@telekabel.net.mk

Group companies DE
Agency abroad DE
Without own Agency DE

MT Malta
E. S. S., Electrical Supplies
& Services Ltd
104 J. Sciberras Str.
Hamrun HMR 08
Phone +356 21 255 777
Fax +356 21 255 999
robert@ess.com.mt

MU Mauritius
MUBELO Electrical Ltd
Office 26, Gateway building,
St Jean Road, Quatre Bornes
Phone +230 467 0989
Fax +230 465 4051
richard.mubelo@orange.mu

MX Mexico
W Interconnections,
S.A. DE C.V.
Blvd. Hermanos Serdán
No. 698
Col. San Rafael Oriente
Puebla, C.P. 72029
Phone +52 222 22686227
clientes@weidmuller.com.mx

MY Malaysia
Connect Plus Technology
Sdn Bhd
No. 43, Jalan PJS, 11/22,
Bandar Sunway,
46150 Petaling Jaya
Selangor Darul Ehsan
Phone +60 3 5633 7363
Fax +60 3-5633 6562
paul@cptech.com.my
www.cptech.com.my

NL Netherlands
Weidmüller Benelux B.V.
Franciscusweg 221
1216 SE Hilversum
Postbus 1505
1200 BM Hilversum
Phone +31 35 6261261
Fax +31 35 6232044
info@weidmuller.nl
www.weidmuller.nl

NO Norway
Siv. Ing. J. F. Knudtzen A/S
Billingstadsletta 97
P.O. Box 160
1378 Nesbru
Phone +47 66 983350
Fax +47 66 980955
firmapost@jfknudtzen.no
www.jfknudtzen.no

NZ New Zealand
Cuthbert S. Steward Limited
27 Te Puni Street
POB 38496
Petone, Wellington
Phone +64 4 5686156
Fax +64 4 5686056
info@weidmueller.de

OM Oman
DAN INTERNATIONAL LLC.
PO.BOX 2901
111 Seeb
Phone +968 503 677
Fax +968 503 755
yedu@danintl.com

PE Peru
IMPEXINCA S.A.C.
Calle Ortiz de Zevallos N°105,
18 Lima, Miraflores,
Phone +511 447 5608
info@impexinca.pe

J & W CIA. S.A.
Calle 6 Mz. D Lte. 23
Urb. Ind. Grimanesa
Callao 01
Phone +51 1 57 22539
Fax +51 1 57 20152
lespinoza@jwcia.com
www.jwcia.com

PH Philippines
Enclosure Systems Specialists Inc
Room 103 Narra Building
2276 Don Chino Roces
Avenue
Makati City 1231
Phone +63 2 813 8580
Fax +63 2 813 8596
sales_encsys@pldtdsl.net

PK Pakistan
Kana Controls (Pak)
Apartment No. 33 C III
Chenab Block,
Allama Iqbal Town
Lahore, Pakistan
Phone +92 42 5419948
+92 42 7845160
Fax +92 42 5422895
nadeem@kanapak.com
www.kanapak.com

PL Poland
Weidmüller Sp. z o.o.
Ul. Goledzinowska 10
03-302 Warszawa
Phone +48 22 5100940
Fax +48 22 5100941
biuro@weidmuller.com.pl
www.weidmuller.pl

PT Portugal
Weidmüller Sistemas de
Interface S. A.
Estrada Outeiro Polima,
R. Augusto
Dias da Silva, Lote B, Esct. 2
2785-515 Abóboda -São
Domingos de Rana
Phone +351 21 4459191
Fax +351 21 4455871
www.weidmueller.pt

QA Qatar
Doha Motors Trading Co.
(Technical Division)
Post Box No. 145
Airport Road
Doha - Qatar
Phone +974 465 1441
Fax +974 465 0925
dmtctech@qatar.net.qa

RO Romania
Rominterface Impex SRL
Str. Gh. Dem Teodorescu 30 A
30916 Bucuresti - sector 3
Phone +40 21 3220230
Fax +40 21 3228857
office@rominterface.ro

RS Serbia
Representative Office
Weidmüller Interface
GmbH & Co. KG
Ustanicka 189, III sprat,
lokal 7a
11050 Beograd
Phone +381 11 288 5274
Fax +381 11 288 5274
zoran.rabrenovic@
weidmueller.com

ES-YU Elektrosistem
Pariske komune 41
11070 Novi Beograd, Serbia
Phone +381 11 3018660
Fax +381 11 2693608
esyu@eunet.rs

RU Russia
OOO Weidmüller
Warshavskoye highway, 25A,
bld. 6
117105 Moskau
Phone +7 4 95 771-6940
Fax +7 4 95 771-6941
info@weidmueller.ru
www.weidmueller.ru

SA Saudi-Arabia
Al Abdulkarim Holding Co.
P.O Box. 4
Dammam 31411
Phone +9668337110
Fax +9668338242
salehsk@akh.com.sa
www.weidmueller.ae

Saudi Electric Supply Co.
P.O. Box 3298
Al Khobar 31952
Phone +966 3 882 9546227
Fax +966 3 882 9547
Safdar.malik@sesco-ge.com

SE Sweden
Weidmüller AB
Axel Daniessons väg 271
P.O. box 31025
200 49 Malmö
Phone +46 (0) 7 71 43 00 44
Fax +46 (0) 40 37 48 60
info@weidmuller.se
www.weidmuller.se

SG Singapore
Weidmuller Pte. Ltd.
70 Bendemeer Road
#04-03 Luzerne
Singapore 339940
Phone +65 6841 5311
Fax +65 6841 5377
info@weidmuller.com.sg
www.weidmuller.com.sg

SI Slovenia
ELEKTROSPOJI d.o.o.
Stegne 25, 1000 Ljubljana
Phone +386 15113810
Fax +386 15111604
info@elektrospoji.si
www.elektrospoji.si

SK Slovakia
ELEKTRIS s.r.o.
Elektrárenská 1
83104 Bratislava
Phone +421 2 49200113
Fax +421 2 49200119
bratislava@elektris.sk

TH Thailand
Pisanu Engineering Co., Ltd
800/43-45 Soi Trakulsuk
Asoke-dindaeng Road,
Dindaeng, Bangkok 10400
Phone +66 2 245 9113
Fax +66 2 6429220
jayasankar@pisanu.co.th
www.pisanu.co.th

TN Tunisia
Please contact
Weidmüller E.U.R.L.
in France

TR Turkey
Weidmüller Elektronik Ticaret
Ltd. Sirketi
Kavacik Mah. Orhan Veli Kanik
Caddesi 9/1
34810 Beykoz – Istanbul
Phone +90 216 5371070 (Pbx)
Fax +90 216 5371077
info@weidmuller.com.tr
www.weidmuller.com.tr

TW Taiwan
Fittatek Co., Ltd.
12F No. 185 Fu-Kuo Road,
Tso Ying Dist, Kaohsiung
Phone +886 7 556 0858
Fax +886 7 556 3279
stanley@fittatek.com.tw
www.fittatek.com.tw

Eucan Enterprise Ltd.
No. 145 He Ping 2nd Rd
Kaohsiung
Phone +886 7 715 6610
Fax +886 7 715 8748
mark@eucan.com.tw
www.eucan.com.tw

UA Ukraine
TEKO INTERFACE
Lomonosova str. 73g
03022 Kiev
Phone +38 044 3740640
Fax +38 044 3740642
weidmueller@tekointerface.com
www.tekointerface.com.ua

US United States
W-Interconnections Inc.
821 Southlake Boulevard,
Virginia - Richmond 23236
Phone +1 804 7942877
Fax +1 804 3792593
info@weidmuller.com
www.weidmuller.com

UY Uruguay
REWO Uruguay S.A
AV. Bolivia 2001 Esq Rocafuerte
Carrasco Montevideo 11300
Phone / Fax +598 260 48439
clorda@rewouruguay.com.uy

UZ Usbekistan
OOO "Elektro Potential"
Gani Mavljanova str., 2B
100084 Tashkent
Phone +998 98-3003821
Fax +998 71-1249286
mz1958@yandex.ru

VE Venezuela
Somerinca C.A.
Quinta Sagrado Corazon
de Jesus -
3ra Transversal -
Los Dos Caminos,
Caracas 1070 - A
Phone +58 212 2352748
Fax +58 212 2399341
klocmoeller@cantv.net
www.kmsomerinca.com.ve

VN Vietnam
AUMI Co., Ltd
E1, La Thanh Hotel,
218 Doi Can Street,
Lieu Giai Ward, Ba Dinh District,
Hanoi City
Phone +84 4762 8601
Fax +84 4266 1391
aumi@aumi.com.vn

Linh Kim Hai Co,. Ltd
78 Hoa Cuc Street Ward 7,
Phu Bhuan District,
Ho Chi Minh City
Phone +84 8517 1717
Fax +84 8517 1818
lkh@linhkimhai.com.vn

ZA South Africa
Phambili Interface (Pty) Ltd
P.O. Box 193,
1609 Johannesburg
5 Bundo Road, Sebenza
1610 Johannesburg,
Endenvale
Phone +27 11 452 1930
Fax +27 11 452 6455
sales@radinterface.co.za
www.radinterface.co.za

DE Other countries
Weidmüller Interface GmbH
& Co. KG
Postfach 3030
32720 Detmold
Klingenbergstraße 16
32758 Detmold
Phone +49 5231 14-0
Fax +49 5231 14-292083
info@weidmueller.de
www.weidmueller.com

We cannot guarantee that there are no mistakes in the publications or software provided by us to the customer for the purpose of making orders. We try our best to quickly correct errors in our printed media.

All orders are based on our general terms of delivery, which can be reviewed on the websites of our group companies where you place your order. On demand we can also send the general terms of delivery to you.

Weidmüller – Partner in Industrial Connectivity

As experienced experts we support our customers and partners around the world with products, solutions and services in the industrial environment of power, signal and data. We are at home in their industries and markets and know the technological challenges of tomorrow. We are therefore continuously developing innovative, sustainable and useful solutions for their individual needs. Together we set standards in Industrial Connectivity.

Weidmüller Interface GmbH & Co. KG
Klingenbergstraße 16
32758 Detmold, Germany
T +49 5231 14-0
F +49 5231 14-292083
info@weidmueller.com
www.weidmueller.com

4 050118 168051

Order number: 1366750000/11/2012/SMDM

X-ON Electronics

Largest Supplier of Electrical and Electronic Components

Click to view similar products for Weidmuller ***manufacturer:***

Other Similar products are found below :

8924550000 56956 0133660000 6720000227 6720005111 68676 69718 EXO24CH 7940000218 8005181001 8008180000 8432240000 8463580000 8545830000 8689870000 8705640000 8869870000 9001080000 9003720000 9004250000 9004780000 9008380000 9013260000 9014100000 9019040000 9025430000 9026010000 9028630000 9032010000 903708 9037350000 9046290000 9046380000 9129643500 913155 9159530000 919656 919764 9202230000 9202850000 9203710000 9204640000 9456750000 9457913000 980811 980826 9912800003 9916280012 9918380000 9919371205