HSF

NOTES:
Rated Current: 3.0AMP
Rated Voltage: 250V AC/DC
Contact Resistance: 20mΩ max
Withstand Voltage: 800V AC/DC
Insulation Resistance: 1000MΩ min
Operation Temperature: −25℃ to +85℃

Contact Material: Brass
Contact plating: Au Or Sn Over Ni
Insulator Material: PA66 Or PA46 UL94V−0

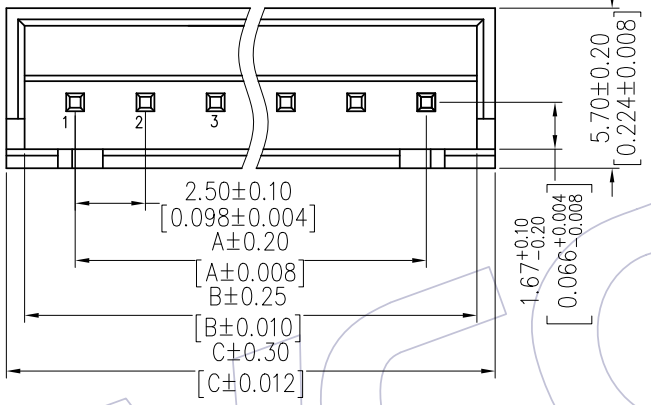

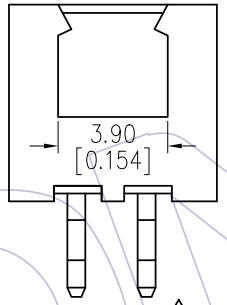

2P结构图 A2

Recommended P.C.B Layout(Top Side)
(PCB BOARD TOLERANCE±0.05)

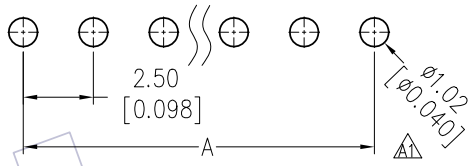

TITLE	PART NO.
TYPE 1	WF2501−WSXXX01
TYPE 2	WF2501−WSXXX02

Ordering Information

WF2501 - WS__ XX__ X 0 X

- H=PA46, Blank=PA66
- No.of pins: 02P~16P, 20P
- Contact Plating: S0=Gold Flash/Tin, S3=10u"Gold/Tin, S4=15u"Gold/Tin, S5=30u"Gold/Tin, G0=Gold Flash, G3=10u"Gold, G4=15u"Gold, G5=30u"Gold, Blank=Tin
- Color: B=Black, T=Natural, W=White, E=Beige
- Packing: 0=PE Bag, T=Tube
- Series No.: 1=Type 1, 2=Type 2

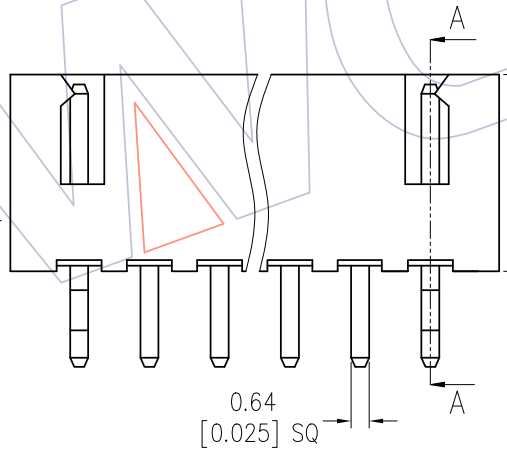

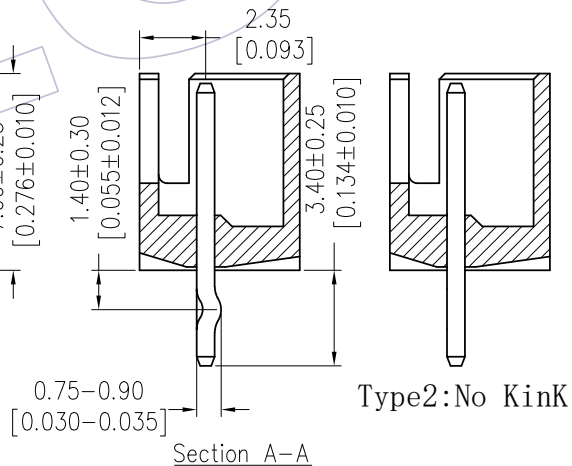

Specification & Ordering Information:

Circuit	Part No.	Dimension		
		A	B	C
02	WF2501−WS02X0X	2.50	6.1	7.4
03	WF2501−WS03X0X	5.00	8.6	9.9
04	WF2501−WS04X0X	7.50	11.1	12.4
05	WF2501−WS05X0X	10.00	13.6	14.9
06	WF2501−WS06X0X	12.50	16.1	17.4
07	WF2501−WS07X0X	15.00	18.6	19.9
08	WF2501−WS08X0X	17.50	21.1	22.4
09	WF2501−WS09X0X	20.00	23.6	24.9
10	WF2501−WS10X0X	22.50	26.1	27.4
11	WF2501−WS11X0X	25.00	28.6	29.9
12	WF2501−WS12X0X	27.50	31.1	32.4
13	WF2501−WS13X0X	30.00	33.6	34.9
14	WF2501−WS14X0X	32.50	36.1	37.4
15	WF2501−WS15X0X	35.00	38.6	39.9
16	WF2501−WS16X0X	37.50	41.1	42.4
20	WF2501−WS20X0X	47.50	51.1	52.4

REV	DATE	MODIFICATION DESCRIPTION	CHANGE
A2	2017/02/13	Add 2P DRAW	A2
A1	2013/10/24	MODIFY THE PCB HOLE DIM	——
A0	2012/09/05	NEW	——

OPERATION	
X.X	±0.40
X.XX	±0.25
X.XXX	±0.15
Angle	± 3°
DIM	TOL

DRAW	Ding	DATE	2017/02/13
CHECK		DATE	
APPROVE		DATE	

SCALE	FIT
UNIT	mm inch
SIZE	A4
SHEET	1/1
PROJ.	

PART NO. WF2501-WSXXX0X

TITLE: "J"TYPE 2.50 WAFER 180° DIP

Customer NO.

WCON
Http: www.wcon.com
WCON-Dongguan
Tel: +86 769 85358920
Fax: +86 769 85358915
E-mail: sales@wcon.com
WCON-Kunshan
Tel: +86 512 57468408
Fax: +86 512 57468468
E-mail: salesks@wcon.com

X-ON Electronics

Largest Supplier of Electrical and Electronic Components

Click to view similar products for Headers & Wire Housings ***category:***

Click to view products by Wcon ***manufacturer:***

Other Similar products are found below :

95000-104TRLF 10135584-644402LF DF62W-EP2022PCA 95000-106TRLF DF62W-2022SCA DF62W-EP2022PC 2203348 DF62W-2022SC 1084018 1029039 1084017 802-10-012-10-002000 1112640 1112639 891-007-9SS-BST1T 000-34000 0008550134 0009482033 0009507031 57102-F02-18ULF 57102-S06-03LF 57202-S52-04LF PCN6-15S-2.5E 0039019024 58102-G61-06LF 582553-1 0009485154 0009508121 0022285053 0050291907 018731A LY20-4P-DT1-P1E-BR 02.125.8002.8 60101931 60598-1 (Cut Strip) M1625-3R/100 61062-3 61082-181009 CSU011177004 636-1427 638009-1 641938-9 641991-4 644168-1 644827-2 647662-1 65039-019ELF 65692-001LF 65781-018 65781-047