HSF

NOTES:
Rated Current: 1.5AMP
Contact Resistance: 20mΩ max
Withstand Voltage: 250V AC/DC
Insulation Resistance: 1000MΩ min
Operation Temperature: −25℃ to +85℃

Contact Material: Brass
Contact plating: Au Or Sn Over Ni
Insulator Material: PA66 UL94V−0

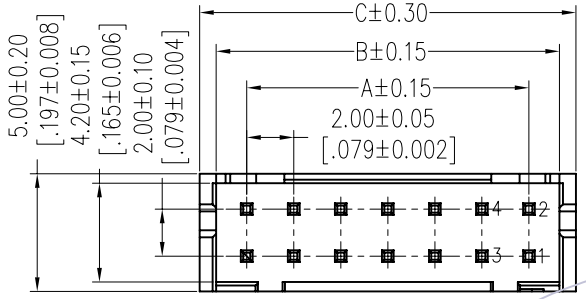

Recommended P.C.B Layout(Top Side)
(PCB BOARD TOLERANCE±0.05)

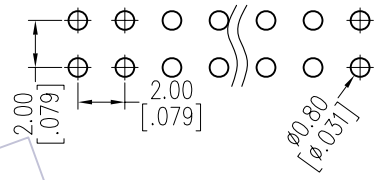

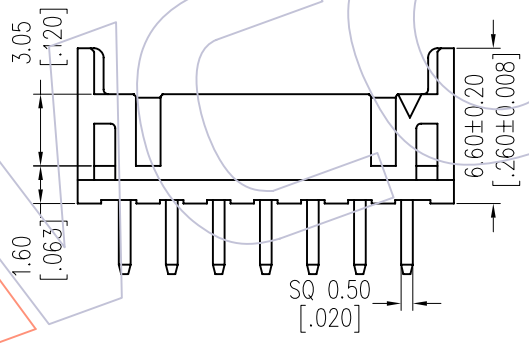

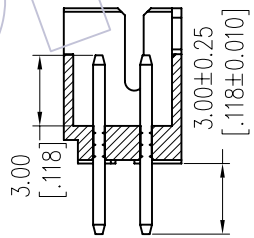

Ordering Information

WF2002B - WS__XX__ X T 1

- No.of pins: 10~28P
- Contact Plating:
  - S0=Gold Flash/Tin
  - S3=10u"Gold/Tin
  - S4=15u"Gold/Tin
  - S5=30u"Gold/Tin
  - G0=Gold Flash
  - G3=10u"Gold
  - G4=15u"Gold
  - G5=30u"Gold
  - Blank=Tin
- Color: B=Black, W=White, E= Beige
- Packing: T=Tube

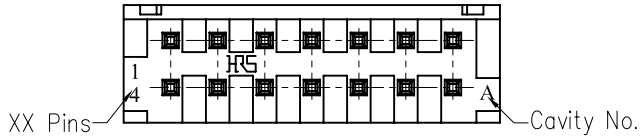

Specification & Ordering Information:

Circuit	Part No.	Dimension		
		A	B	C
10	WF2002B−WS10XT1	8.00	10.60	12.00
12	WF2002B−WS12XT1	10.00	12.60	14.00
14	WF2002B−WS14XT1	12.00	14.60	16.00
16	WF2002B−WS16XT1	14.00	16.60	18.00
18	WF2002B−WS18XT1	16.00	18.60	20.00
20	WF2002B−WS20XT1	18.00	20.60	22.00
22	WF2002B−WS22XT1	20.00	22.60	24.00
24	WF2002B−WS24XT1	22.00	24.60	26.00
26	WF2002B−WS26XT1	24.00	26.60	28.00
28	WF2002B−WS28XT1	26.00	28.60	30.00

REV	DATE	MODIFICATION DESCRIPTION	CHANGE
A0	2012/08/25	NEW	——

OPERATION	
X.X	±0.40
X.XX	±0.25
X.XXX	±0.15
Angle	± 3°
DIM	TOL

DRAW	JYHuang	DATE	2012/08/25
CHECK		DATE	
APPROVE		DATE	

SCALE	FIT
UNIT	mm / inch
SIZE	A4
SHEET	1/1
PROJ.	

PART NO. SEE TAB

TITLE: PHD2.0 WAFER 180°

Customer NO.

WCON
Http: www.wcon.com
WCON−Dongguan
Tel: +86 769 85358920
Fax: +86 769 85358915
E-mail: sales@wcon.com
WCON−Kunshan
Tel: +86 512 57468408
Fax: +86 512 57468468
E-mail: salesks@wcon.com

X-ON Electronics

Largest Supplier of Electrical and Electronic Components

Click to view similar products for Headers & Wire Housings ***category:***

Click to view products by Wcon ***manufacturer:***

Other Similar products are found below :

95000-104TRLF 10135584-644402LF DF62W-EP2022PCA 95000-106TRLF DF62W-2022SCA DF62W-EP2022PC 2203348 DF62W-2022SC 1084018 1029039 1084017 802-10-012-10-002000 1112640 1112639 891-007-9SS-BST1T 000-34000 0008550134 0009482033 0009507031 57102-F02-18ULF 57102-S06-03LF 57202-S52-04LF PCN6-15S-2.5E 0039019024 58102-G61-06LF 582553-1 0009485154 0009508121 0022285053 0050291907 018731A LY20-4P-DT1-P1E-BR 02.125.8002.8 60101931 60598-1 (Cut Strip) M1625-3R/100 61062-3 61082-181009 CSU011177004 636-1427 638009-1 641938-9 641991-4 644168-1 644827-2 647662-1 65039-019ELF 65692-001LF 65781-018 65781-047