HSF

NOTES:
Current Rating: 1.0AMP
Contact Resistance: 20mΩ Max
Withstand Voltage: 500V AC/DC
Insulation Resistance: 1000MΩ Min
Operation Temperature: -40℃ to +105℃

Contact Material:Phosphor Bronze
Contact plating:Au over Ni
Insulator Material:PA9T+30%GF UL94V-0

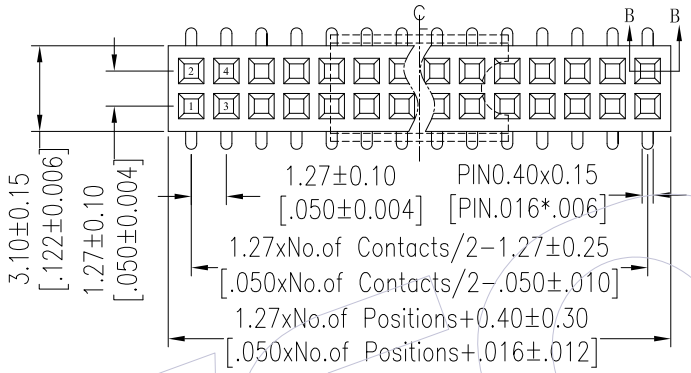

Recommended P.C.B Layout(Top Side)
(PCB BOARD TOLERANCE±0.05)

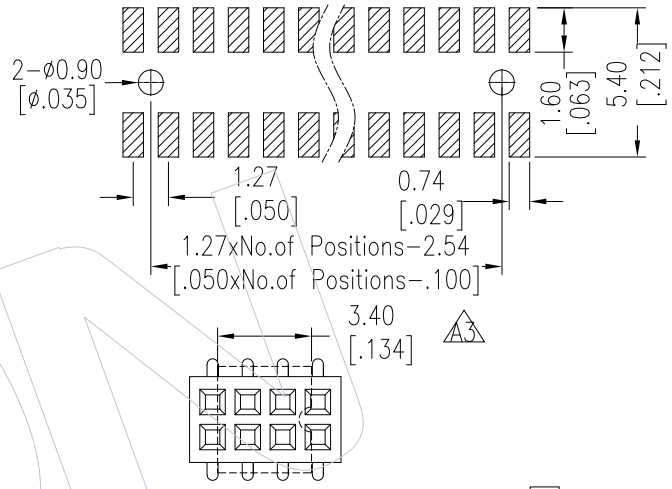

Ordering Information

2321-2 XX M XX CUN T X

- No.of Pins per Row: 02~50Pin
- Contact Plating: G0=Gold Flash, G3=10μ"Gold, G4=15μ"Gold, G5=30μ"Gold
- Packing: T=Tube, P=Tube+CAP, R=Tape&Reel+CAP
- Series No. 1=Type 1, 2=Type 2

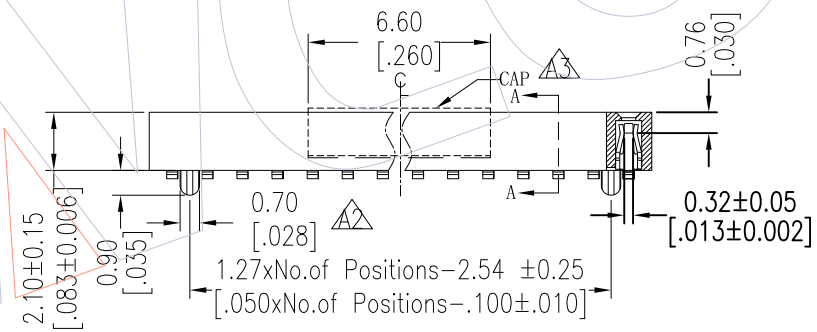

SECTION B-B

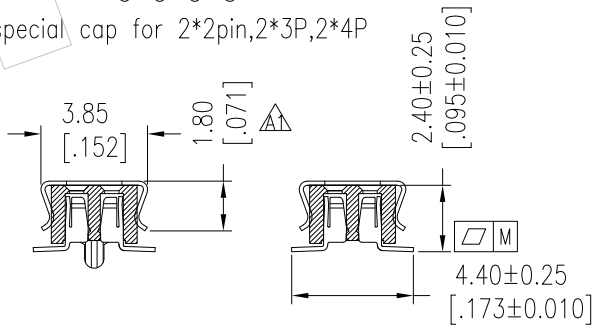

TYPE 2(W/T POST) TYPE 1(W/O POST)

SECTION A-A

Item	Pitch	Mating
Standard	1.27	1310/1315/1320
Alternate		

1~9P	M=0.10
10~19P	M=0.15
20P以上	M=0.25

TITLE	PART NO.
TYPE 1	2321-2XXMXXCUNT1
TYPE 2	2321-2XXMXXCUNT2

REV	DATE	MODIFICATION DESCRIPTION	CHANGE
A3	2014/12/30	Modify CAP	
A2	2014/11/04	Modify Post	------
A1	2013/08/21	Modify cap2.00 → 1.80	------
A0	2012/07/06	NEW	------

OPERATION	
X.X	±0.40
X.XX	±0.25
X.XXX	±0.15
Angle	± 3°
DIM	TOL

DRAW	Wang	DATE	2014/12/30
CHECK		DATE	
APPROVE		DATE	
SCALE	FIT		
UNIT	mm		
SIZE	A4		
SHEET	1/1		
PROJ.			

PART NO. SEE TABLE

TITLE: 1.27mm DUAL FEMALE HEADER SMT H=2.10

Customer NO.

WCON
Http: www.wcon.com
WCON-Dongguan
Tel: +86 769 85358920
Fax: +86 769 85358915
E-mail: sales@wcon.com
WCON-Kunshan
Tel: +86 512 57468408
Fax: +86 512 57468468
E-mail: salesks@wcon.com

X-ON Electronics

Largest Supplier of Electrical and Electronic Components

Click to view similar products for Headers & Wire Housings ***category:***

Click to view products by Wcon ***manufacturer:***

Other Similar products are found below :

95000-104TRLF 10135584-644402LF DF62W-EP2022PCA 95000-106TRLF DF62W-2022SCA DF62W-EP2022PC 2203348 DF62W-2022SC 1084018 1029039 1084017 802-10-012-10-002000 1112640 1112639 891-007-9SS-BST1T 000-34000 0008550134 0009482033 0009507031 57102-F02-18ULF 57102-S06-03LF 57202-S52-04LF PCN6-15S-2.5E 0039019024 58102-G61-06LF 582553-1 0009485154 0009508121 0022285053 0050291907 018731A LY20-4P-DT1-P1E-BR 02.125.8002.8 60101931 60598-1 (Cut Strip) M1625-3R/100 61062-3 61082-181009 CSU011177004 636-1427 638009-1 641938-9 641991-4 644168-1 644827-2 647662-1 65039-019ELF 65692-001LF 65781-018 65781-047