Features

Frequency range : 12MHz to 66MHz
Ceramic SMD package
Seam sealing
External dimensions (mm)
L : 2.5 x W : 2.0 x H : 0.55
RoHS compliant & Pb free

Applications

Bluetooth, Wireless LAN
Microprocessor
Mobile phone, Computer, Modem
Audio, Video
Consumer products

Electrical Characteristics

Item		8Z	Conditions
Frequency Range	F_0	12MHz ~ 66MHz	
Frequency Tolerance	F_{tol}	±30ppm, ±20ppm, ±10ppm	at 25°C
Frequency Stability over Operating Temperature Range (refer to 25°C)	F_{stab}	±30 ppm	-20°C ~ +70°C
		±20 ppm	
		±10 ppm	
		±10 ppm	-30°C ~ +85°C
		±30 ppm	-40°C ~ +85°C
		±20 ppm	
		±60 ppm	-40°C ~ +125°C
Operating Temperature Range	T_{OTR}	-20°C ~ +70°C	
		-40°C ~ +85°C	
		-40°C ~ +125°C	
Shunt Capacitance	C_0	3pF Max.	
Drive Level	D_L	1 ~ 200µW (100µW Typ.)	
Load Capacitance	C_L	6pF, 8pF, 10pF 12pF, 16pF, 18pF, 20pF	
Aging (at 25°C ± 3°C, first year)	F_{aging}	±3ppm Max.	Note [1]
Storage Temperature Range	T_{STR}	-55°C ~ +125°C	

Notes:

[1] Please contact us for low aging +/-1ppm grade crystals.

Motional Resistance (ESR)

Fundamental	
12 ~ 13 MHz	150Ω Max.
14 ~ 30 MHz	100Ω Max.
30 ~ 66 MHz	60Ω Max.

Dimensions

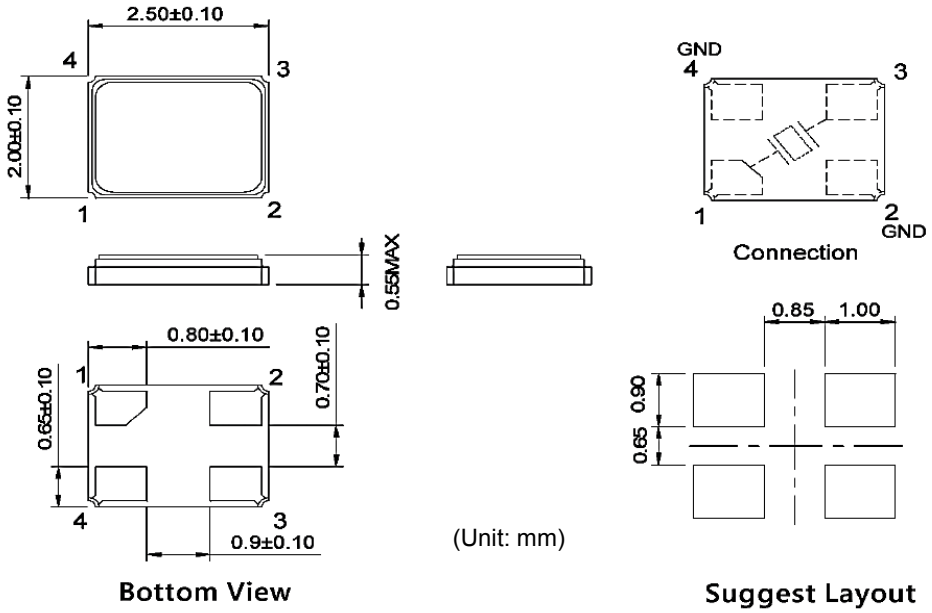

Ordering Information

8Z - 24.000M A H E - T

Frequency in Hz

Please contact us for available frequencies

Packaging Method

T	Tape & Reel

Frequency Tolerance (at 25℃)

A	±30 ppm
D	±20 ppm
E	±10 ppm

Load Capacitance

B	6 pF
V	8 pF
Q	10 pF
E	12 pF
I	16 pF
J	18 pF
K	20 pF

Frequency Stability (over Temp.)

A	±30 ppm	(-20℃ ~ +70℃)
D	±20 ppm	(-20℃ ~ +70℃)
E	±10 ppm	(-20℃ ~ +70℃)
T	±10 ppm	(-30℃ ~ +85℃)
H	±30 ppm	(-40℃ ~ +85℃)
I	±20 ppm	(-40℃ ~ +85℃)
K	±60 ppm	(-40℃ ~ +125℃)

Packing

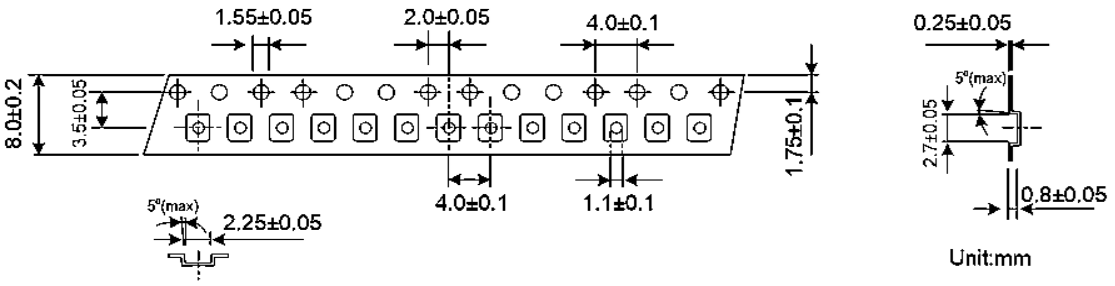

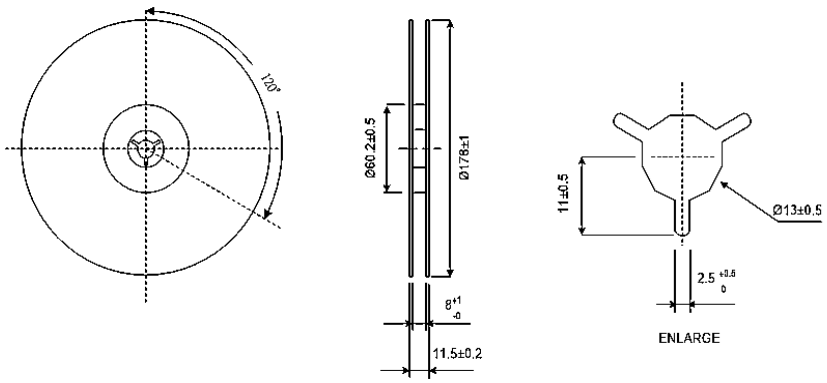

(Unit: mm)

Reflow Profile

Solder melting point : 220℃ ± 10℃, 60 sec. Min.
Peak temperature : 260℃ ± 10℃, 10 sec. Min.

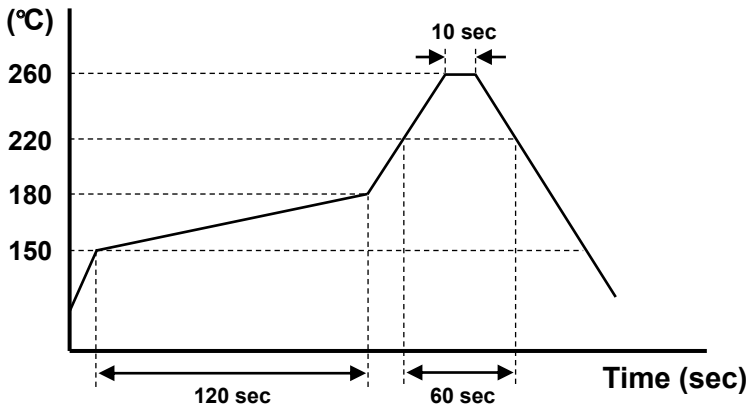

X-ON Electronics

Largest Supplier of Electrical and Electronic Components

Click to view similar products for Crystals ***category:***

Click to view products by TXC Corporation ***manufacturer:***

Other Similar products are found below :

AB-11.0592MHZ ABC2-6.000MHZ-D4Z-T ABLS-20.000MHZ-D2-T ABS071-32.768KHZ-6-T LFXTAL066198Cutt ABL-27.000MHZ-B4Y-T ABM11-132-24.000MHZ-T3 ABM3B1-25.000MHZ-D2Y-T SPT2A-.032768B SPT2A.032768G LFXTAL065253Cutt LFXTAL066431Cutt XT9SNLANA16M 7A-24.576MBBK-T 6504-202-1501 6526-202-1501 ABM3B-24.000MHZ-R60-D1W- ABLS-12.000MHZ-B2Y-T SG636PCE-20.000MC 3404 C1E-19.200-12-1530-X-R ABM11-16.000MHZ-9-B1U-T FL5000014 EUCA18-3.1872M FX0800015 425F35E027M0000 FP0800018 MS3V-T1R-32.768kHz-7pF-20PPM-TA-QC-Au VXM7-1C1-16M000 MS3V-T1R-32.768kHz-9pF-20PPM-TA-QC-Au 17000 17301 GB1200038 4133-VBO-168.62MHZ 4133-VBO-171.750MHZ NX8045GB-12M-STD-CSF-4 NX8045GB-5MHZ-STD-CSF-3 FC5BSHFEM25.0-T1 FC5AQCCMF10.0-T1 SRX6353(T) 32.768K7PI/3215E FC-12M 32.7680KA-A0 FC-12M 32.7680KD-A0 HC49USM-FF3F18-25.000MHz WC26F-32.768KHz HC-49/U-S6144000BBKB FC3BSHHEF32.0-T3 ABM3C-25.000MHZ-E4Y-T LFXTAL034477Bulk ABM8G-12.000MHZ-D4Y-T