THIS DRAWING IS UNPUBLISHED. | RELEASED FOR PUBLICATION 20

© COPYRIGHT 20 BY TYCO ELECTRONICS CORPORATION. ALL RIGHTS RESERVED.

| SET UP GAUGE 2119599-1 | LOC A | DIST 66 |
|---|---|---|

| REVISIONS | | | | | |
|---|---|---|---|---|---|
| P | LTR | DESCRIPTION | DATE | DWN | APVD |
| | A | RELEASED | 27OCT2017 | TB | TE |

| ATLANTIC VERSION TERMINATOR INTERFACE ADAPTER | PART NUMBER | REVISION | DESCRIPTION | FEED TYPE |
|---|---|---|---|---|
| 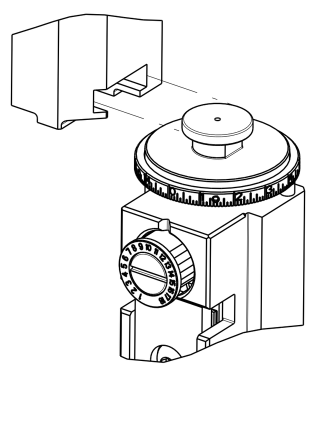 | 2836941-1 | A | FINE CRIMP HEIGHT ADJUST | MECHANICAL |
| | 2836941-2 | A | FINE CRIMP HEIGHT ADJUST | PNEUMATIC |
| | 2836941-5 | A | FINE CRIMP HEIGHT ADJUST | SERVO LATCH PLATE (4) |
| | 2836941-6 | A | NON-CRIMP HEIGHT ADJUST | (4) SERVO LATCH PLATE (12) |
| | 2836941-7 | A | FINE CRIMP HEIGHT ADJUST | NONE |
| | 7-2836941-7 | A | CRIMP TOOLING KIT | - |

APPLICATOR STYLE CONVERSION CHART

| CONVERT TO | PART NUMBERS REQUIRED | | | | | |
|---|---|---|---|---|---|---|
| PNEUMATIC FEED | 2119950-1 | 1338685-1 | 5-18022-5 | 2119641-1 | 2119799-1 | 2063440-1 |
| SERVO LATCH PLATE | 2119951-1 | - | 8-2836941-5 | 1901094-3 | - | 2168400-6 (QUANTITY 2) |
| SMART APPLICATOR | 2161326-1 | - | 8-2836941-4 | - | - | - |
| MECHANICAL FEED | 2119949-1 | 1338685-1 | 5-18022-5 | 2119653-1 | - | - |
| SERVO LATCH PLATE | 2119951-1 | - | 8-2836941-5 | 1901094-3 | - | 2168400-6 (QUANTITY 2) |
| SMART APPLICATOR | 2161326-1 | - | 8-2836941-4 | - | - | - |
| MECHANICAL FEED | 2119949-1 | 1338685-1 | 5-18022-5 | 2119653-1 | - | - |
| PNEUMATIC FEED | 2119950-1 | 1338685-1 | 5-18022-5 | 2119641-1 | 2119799-1 | 2063440-1 |
| - | - | - | - | - | - | - |
| - | - | - | - | - | - | - |
| - | - | - | - | - | - | - |
| - | - | - | - | - | - | - |

| APPLICATOR DATA | | |
|---|---|---|
| CRIMP | SIZE | TYPE |
| WIRE | 1.40 mm [.055] | F |
| INSUL | 1.65 mm [.065] | O |
| APPLICATOR INSTRUCTIONS 408-10389 | | |

| TERMINAL DATA: HU LANE TERMINAL | | TE CRIMP SPECIFICATION | |
|---|---|---|---|
| TERMINAL NAME: 0.64 SERIES TERMINAL | | | |
| WIRE STRIP LENGTH 3.57-4.33 mm [.141-.171 IN] | | INSULATION DIAMETER RANGE Ø1.22-1.63 mm [.048-.064 IN] | |
| TERMINAL APPLICATION SPECIFICATION | NONE / - | - / - | - / - |
| TERMINALS APPLIED | | | |
| TE TERMINAL | HU LANE TERMINAL | TE TERMINAL | HU LANE TERMINAL |
| 2318392-1 | 6805803KSS | | |

| WIRE SIZE | CRIMP HEIGHT mm [INCH] | CRIMP HEIGHT REFERENCE SETTING (9) |
|---|---|---|
| 0.50mm2 | 1.03+/-0.05 [.041+/-.002] | 9.3 |
| 0.35mm2 | 0.91+/-0.05 [.036+/-.002] | 10.8 |

(1) RECOMMENDED SPARE PARTS

(2) GREASE BEARING SURFACES LIGHTLY

3. LUBRICATE DAILY PER THE APPLICATOR INSTRUCTION SHEET SUPPLIED WITH THE APPLICATOR.

(4) APPLICATOR SPECIFIC DATA TO BE ENTERED INTO BLANK MEMORY CHIP AT ASSEMBLY. SEE BELOW FOR PART NUMBER:
MECHANICAL FEED WITH "SMART APPLICATOR" CONVERSION: 8-2836941-4
PNEUMATIC FEED WITH "SMART APPLICATOR" CONVERSION: 8-2836941-4
SERVO FEED WITH "FINE CRIMP HEIGHT ADJUST": 8-2836941-5
SERVO FEED WITH "NON-CRIMP HEIGHT ADJUST": 8-2836941-6

5. ADJUSTMENT OF THE STRIPPER MAY BE REQUIRED WHEN MOVING THE APPLICATOR BETWEEN BENCH AND LEADMAKER APPLICATIONS.

(6) APPLY PART NUMBER 1-23419-5 LOCTITE TO THREADS OF ITEM 62.
APPLY PART NUMBER 2-23419-6 LOCTITE TO THREADS OF ITEM 242.
FOR -6 ONLY APPLY PART NUMBER 1-23419-5 LOCTITE TO THREADS OF ITEM 37.

(7) GREASE THREADS, GROOVE AND O-RING ON ITEMS 35 & 252.

(8) MAGNET, ITEM 166 MUST BE ORIENTED CORRECTLY IN ORDER TO PROPERLY ACTUATE THE COUNTER.

(9) CRIMP HEIGHT REFERENCE SETTING WAS THE SETTING USED WHEN THE APPLICATOR WAS QUALIFIED AT THE FACTORY. ADJUSTMENT MAY BE NECESSARY WHEN RUNNING APPLICATOR IN THE FIELD.

(10) SPARE FEED CAM STORAGE LOCATION REFER TO INSTRUCTION SHEET FOR ADDITIONAL INFORMATION.

(11) TO CONVERT THE APPLICATOR TO A NON-CARRIER CUTTING STYLE, REMOVE ITEM 13 AND ATTACH TO THE LOCATION ON THE BACK SIDE OF THE HOUSING. REFER TO INSTRUCTION SHEET FOR ADDITIONAL INFORMATION.

(12) WHEN ASSEMBLING A NON CRIMP HEIGHT ADJUST APPLICATOR (-6) USE SHIMS FROM ITEM 260 TO ACHIEVE A NOMINAL SHIM HEIGHT OF 4.77.

*WARNING
ON INSTALLATION, SET WIRE DISC, ITEM 40 TO LARGEST WIRE SIZE SETTING. USE OF SETTINGS BELOW MINIMUM REQUIRED CRIMP HEIGHT SETTING WILL CAUSE DAMAGE TO CRIMP TOOLING.

| NOTE | -77 | -7 | -6 | -5 | -2 | -1 | PART NO | DESCRIPTION | ITEM NO |
|---|---|---|---|---|---|---|---|---|---|
| (12) | - | - | 1 | - | - | - | 2119957-2 | APPLICATOR SHIM PACK | 260 |

| NOTE | -77 | -7 | -6 | -5 | -2 | -1 | PART NO | DESCRIPTION | ITEM NO |
|---|---|---|---|---|---|---|---|---|---|
| (7) | - | 1 | - | 1 | 1 | 1 | 8-21084-0 | O-RING, .676 ID, .070 DIA. MAT. | 252 |
| | - | - | - | - | 1 | - | 2119640-1 | PUSH ROD, AIR FEED | 250 |
| | - | - | - | - | 1 | - | 1803259-1 | BUSHING, FLANGED | 249 |
| | - | - | - | - | 1 | - | 2119641-1 | FEED CAM, AIR FEED | 248 |
| | - | 1 | - | 1 | 1 | 1 | 2119798-1 | DETENT PIN | 247 |
| | - | 1 | - | 1 | 1 | 1 | 1-22279-3 | SPRING, COMPRESSION | 246 |
| | - | - | 1 | - | - | - | 2119758-1 | RAM, AMP STYLE, SIDE FEED, NON-ADJ. | 245 |
| | - | 1 | 1 | 1 | 1 | 1 | 2119082-5 | CAM, SNAIL, INSULATION ADJUSTMENT | 244 |
| | - | 1 | 1 | 1 | 1 | 1 | 2079764-1 | WASHER, WAVE SPRING, CREST-TO-CREST | 243 |
| (6) | - | 1 | 1 | 1 | 1 | 1 | 2119083-1 | RETAINER, INSULATION DIAL | 242 |
| | - | 1 | 1 | 1 | 1 | 1 | 7-18023-7 | SCR, SKT HD CAP M3 X 4.0 | 241 |
| | - | - | 2 | 2 | - | - | 2168400-6 | SHCS, LOW HEAD, RoHS, M5 X 16 | 240 |
| | - | - | - | - | - | 1 | 2119580-1 | MECHANICAL FEED ASSEMBLY | 239 |
| | - | - | - | - | 1 | - | 2063440-1 | AIR FEED MODULE | 238 |
| | - | - | 1 | 1 | - | - | 2119740-2 | TAG,IDENTIFICATION | 213 |
| | - | - | 1 | 1 | - | - | 1901094-3 | SPACER, FEEDER | 198 |
| | - | - | - | - | 2 | - | 21045-3 | RING, RETAIN, EXTERN, 3/16 CRESCENT | 172 |
| | - | 1 | 1 | 1 | 1 | 1 | 994969-1 | MAGNET, RARE EARTH HIGH ENERGY | 166 |
| | - | REF | REF | REF | REF | REF | 994970-2 | COUNTER, MAGNETIC | 164 |
| | - | - | - | - | 1 | - | 240638-1 | SPRING, FEED FINGER | 163 |
| | - | - | - | - | 1 | - | 3-23627-7 | PIN, RETAIN, GRVD, 3/16 X .854 | 137 |
| | - | - | - | - | 1 | - | 2119799-1 | HOLDER,FEED FINGER, AF | 136 |
| | - | - | REF | REF | - | - | SEE NOTE 4 | MEMORY CHIP, PROGRAMMED | 135 |
| | - | - | 1 | 1 | - | - | 1633743-1 | SERVO FEED LATCH ASM | 133 |
| | - | - | REF | REF | - | - | 2119944-1 | FEED FINGER ASSEMBLY,SF | 117 |
| | - | 1 | 1 | 1 | 1 | 1 | 455888-7 | SPACER, CRIMPER | 82 |
| | - | 1 | 1 | 1 | 1 | 1 | 2119956-1 | DOCUMENTATION PACKAGE | 71 |
| | - | 1 | - | - | 1 | 1 | 2119740-1 | TAG,IDENTIFICATION | 67 |
| | - | 2 | 2 | 2 | 2 | 2 | 2168078-1 | SCREW, DRIVE, RH, RoHS, 2 x .188 | 66 |
| | - | 1 | - | 1 | 1 | 1 | 2119793-1 | LIMITER, ADJUSTMENT BOLT | 63 |
| (6) | - | 3 | - | 3 | 3 | 3 | 992763-5 | SCR, SET, SOC, CONE PNT, M3 x 4.0 | 62 |
| | - | 1 | 1 | 1 | 1 | 1 | 2079383-4 | SCR, BHSC, RoHS (M4 X 8) | 60 |
| | - | - | - | - | 1 | 1 | 5-18022-5 | SCR, HEX HD CAP, M4 X 6.0 | 59 |
| | - | - | - | - | 1 | 1 | 1338685-1 | PAWL, FEED | 56 |
| | - | 4 | 4 | 4 | 4 | 4 | 2168400-1 | SHCS, LOW HEAD, RoHS, M4 X 12 | 54 |
| | - | 2 | 2 | 2 | 2 | 2 | 1-2168083-0 | SCR, SKT HD CAP, RoHS, M4 X 10 | 53 |
| | - | 1 | 1 | 1 | 1 | 1 | 5018030-1 | NUT, HEX, REG, RoHS, M3 | 52 |
| | - | 1 | 1 | 1 | 1 | 1 | 811242-5 | BUMPER, HOLD DOWN | 51 |
| | - | 1 | 1 | 1 | 1 | 1 | 690753-2 | SPACER, TONKER | 50 |
| | - | - | - | - | 1 | 2 | 18023-9 | SCR, SKT HD CAP M4 X 6.0 | 49 |
| | - | - | - | - | - | 1 | 2119652-1 | FEED CAM, PRE FEED | 48 |
| | - | - | - | - | - | 1 | 2119653-1 | FEED CAM, POST FEED | 47 |
| | - | 1 | 1 | 1 | 1 | 1 | 2119656-9 | APPLICATOR BASIC ASSEMBLY, SF | 46 |
| | - | 1 | - | 1 | 1 | 1 | 2119370-1 | RAM, AMP STYLE, SIDE FEED | 44 |
| | - | 1 | 1 | 1 | 1 | 1 | 2079383-7 | SCR, BHSC, RoHS (M8 X 25) | 41 |
| | - | 1 | - | 1 | 1 | 1 | 2119645-1 | DISC, NUMBERED FA WIRE ADJUSTMENT | 40 |
| | - | 1 | - | 1 | 1 | 1 | 2119957-1 | APPLICATOR SHIM PACK | 39 |
| | - | 1 | 1 | 1 | 1 | 1 | 1-2119644-2 | RAM WASHER, PRECISION | 38 |
| (6) | - | 1 | 1 | 1 | 1 | 1 | 2119085-1 | FA HEAD, ATLANTIC STYLE | 37 |
| (7) | - | 1 | - | 1 | 1 | 1 | 2119092-1 | BOLT, ADJUSTMENT | 35 |
| | - | 1 | 1 | 1 | 1 | 1 | 3-1752356-4 | SUPPORT, TERMINAL | 34 |
| | - | 2 | 2 | 2 | 2 | 2 | 2079383-5 | SCR, BHSC, RoHS (M4 X 20) | 33 |
| | - | 1 | 1 | 1 | 1 | 1 | 2161328-1 | HEX HEAD, FLANGED, M5 x 8mm LONG | 32 |
| | - | 1 | 1 | 1 | 1 | 1 | 1320908-3 | SPACER, STRIP GUIDE | 30 |
| | - | 1 | 1 | 1 | 1 | 1 | 2119959-1 | ASSEMBLY, STRIP GUIDE | 29 |
| | - | 1 | 1 | 1 | 1 | 1 | 455888-3 | SPACER, CRIMPER | 28 |
| | - | 1 | 1 | 1 | 1 | 1 | 1320928-2 | STRIP GUIDE | 24 |
| | - | 1 | 1 | 1 | 1 | 1 | 2168083-2 | SCR, SKT HD CAP, RoHS, M4 X 8.0 | 21 |
| | - | 2 | 2 | 2 | 2 | 2 | 1-18028-2 | WASHER, FLAT, REG M4 | 20 |
| | - | 1 | 1 | 1 | 1 | 1 | 2119533-1 | STRIPPER, SIDE FEED | 19 |
| (11) (1) | - | 1 | 1 | 1 | 1 | 1 | 2119806-1 | INSERT, SHEAR | 13 |
| | - | 1 | 1 | 1 | 1 | 1 | 3-22280-3 | SPRING, COMPRESSION | 12 |
| | - | 1 | 1 | 1 | 1 | 1 | 1-356885-4 | STOP, SHEAR | 11 |
| (1) | - | 1 | 1 | 1 | 1 | 1 | 2119805-1 | SHEAR HOLDER, FRONT | 10 |
| (1) | - | 1 | 1 | 1 | 1 | 1 | 1803095-1 | FLOATING SHEAR, FRONT - | 9 |
| (1) | 1 | 1 | 1 | 1 | 1 | 1 | 3-1803250-4 | ANVIL, COMBINATION | 8 |
| | - | - | - | - | - | - | - | - | 7 |
| | - | - | - | - | - | - | - | - | 6 |
| | - | 1 | 1 | 1 | 1 | 1 | 2119757-4 | DEPRESSOR, SHEAR | 5 |
| | - | 1 | 1 | 1 | 1 | 1 | 2-238011-8 | BLOCK, CRIMPER SPACER | 4 |
| (1) | 1 | 1 | 1 | 1 | 1 | 1 | 7-2119784-5 | CRIMPER, INSULATION O PREMIUM | 3 |
| | - | 1 | 1 | 1 | 1 | 1 | 455888-3 | SPACER, CRIMPER | 2 |
| (1) | 1 | 1 | 1 | 1 | 1 | 1 | 1-456402-4 | CRIMPER, WIRE PREMIUM | 1 |

# ATLANTIC VERSION
Shown on sheets 1 of 4 & 2 of 4
(Pacific version shown on sheets 3 of 4 & 4 of 4)

THIS DRAWING IS A CONTROLLED DOCUMENT FOR TYCO ELECTRONICS CORPORATION IT IS SUBJECT TO CHANGE AND THE CONTROLLING ENGINEERING ORGANIZATION SHOULD BE CONTACTED FOR THE LATEST REVISION.

| | |
|---|---|
| DWN | K.HUANG 27SEP2017 |
| CHK | L.ZHANG 27SEP2017 |
| APVD | L.ZHANG 27SEP2017 |
| DIMENSIONS: | mm |
| TOLERANCES UNLESS OTHERWISE SPECIFIED: | 0 PLC ±- / 1 PLC ±- / 2 PLC ±- / 3 PLC ±- / 4 PLC ±- / ANGLES ±- |
| MATERIAL | - |
| FINISH | - |
| PRODUCT SPEC | - |
| APPLICATION SPEC | - |
| WEIGHT | - |
| | TE Connectivity Harrisburg, PA 17105-3608 |
| NAME | Ocean Side Feed Applicator - |
| SIZE | A1 |
| CAGE CODE | 00779 |
| DRAWING NO | C-2836941 |
| RESTRICTED TO | - |
| SCALE | 1:2 |
| SHEET | 1 OF 4 |
| REV | A |

Customer Accessible Production Drawing

AMP 4805 REV 31MAR2000

SHEETS 3 & 4 ARE NOT REQUIRED FOR ATLANTIC VERSION

THIS DRAWING IS UNPUBLISHED. RELEASED FOR PUBLICATION 20
© COPYRIGHT 20 BY TYCO ELECTRONICS CORPORATION. ALL RIGHTS RESERVED.

| LOC | DIST |
|---|---|
| A | 66 |

REVISIONS

| P | LTR | DESCRIPTION | DATE | DWN | APVD |
|---|---|---|---|---|---|
| | - | SEE SHEET 1 | - | - | - |

## FEED TYPE MECHANICAL

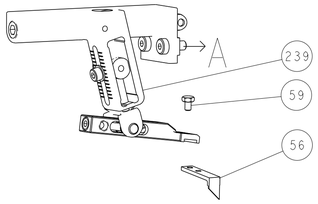


## PNEUMATIC

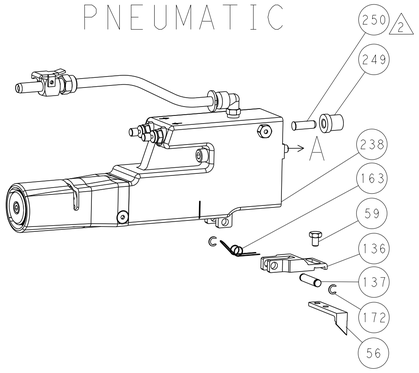


## SERVO LATCH PLATE

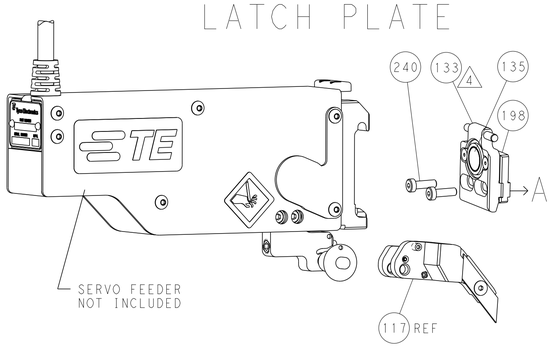


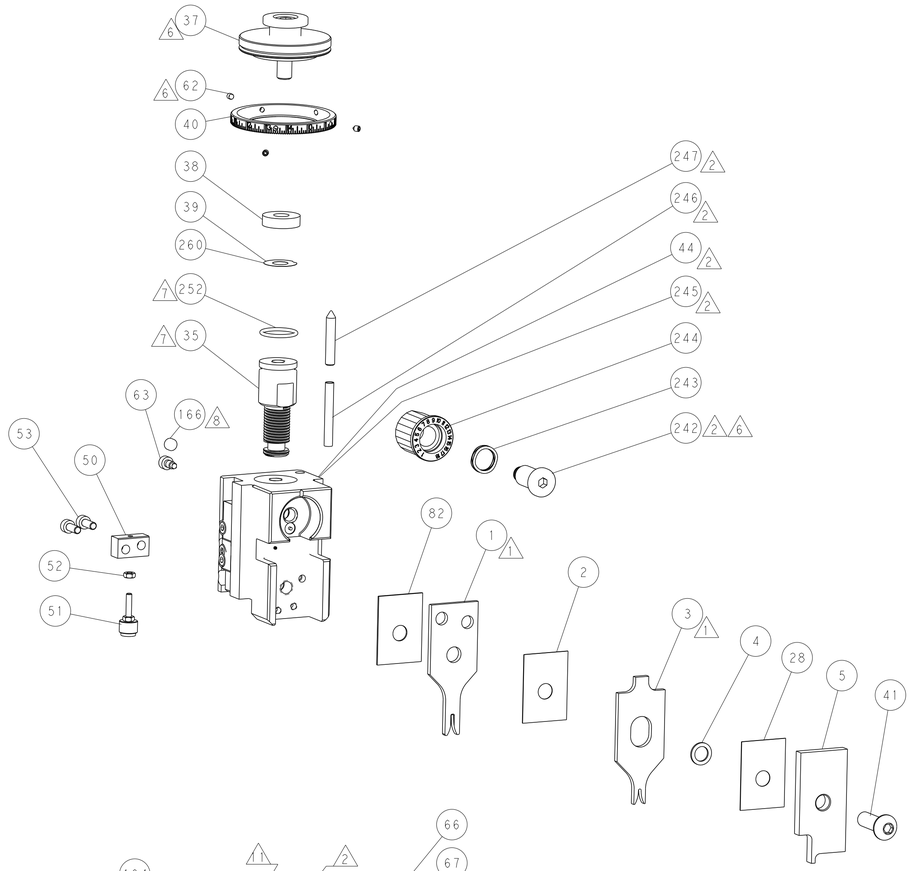


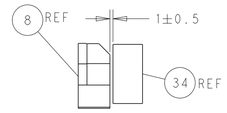


TERMINAL SUPPORT LOCATION

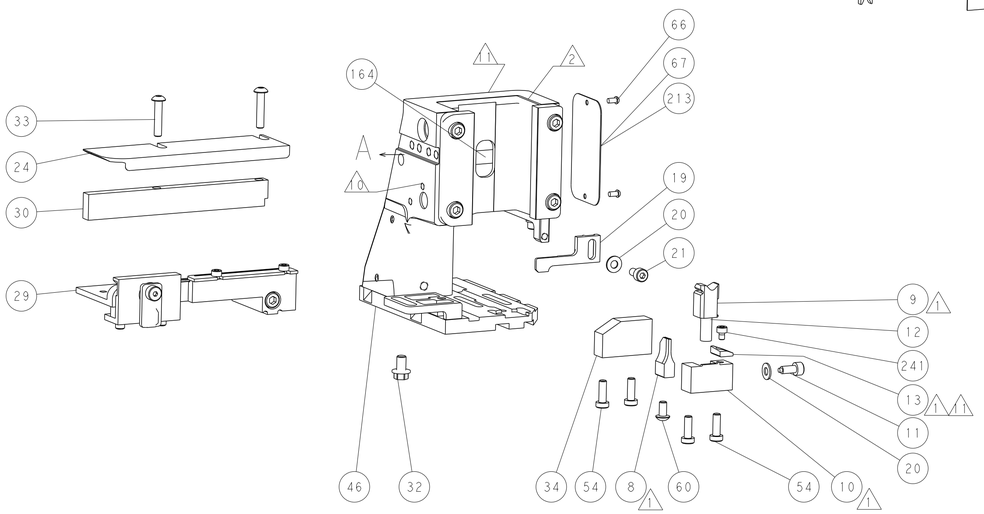


ITEM 30 LOCATED AT FRONT HOLES

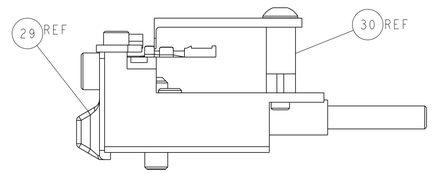


FEED TRACK POSITION
GUIDE BY INSULATION BARREL

## CAM POSITIONS

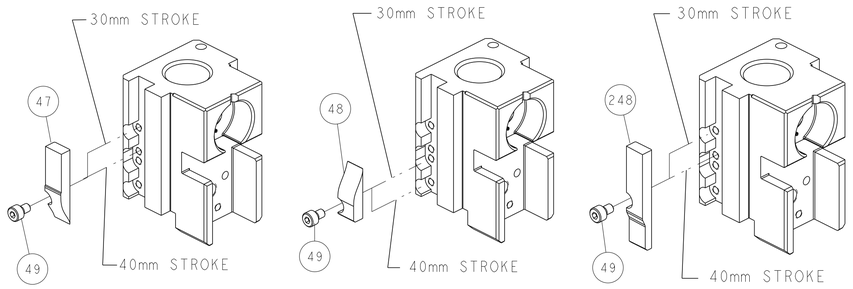


# ATLANTIC VERSION

Shown on sheets 1 of 4 & 2 of 4
(Pacific version shown on sheets 3 of 4 & 4 of 4)

THIS DRAWING IS A CONTROLLED DOCUMENT FOR TYCO ELECTRONICS CORPORATION IT IS SUBJECT TO CHANGE AND THE CONTROLLING ENGINEERING ORGANIZATION SHOULD BE CONTACTED FOR THE LATEST REVISION.

DIMENSIONS: mm

TOLERANCES UNLESS OTHERWISE SPECIFIED:
0 PLC ±-
1 PLC ±-
2 PLC ±-
3 PLC ±-
4 PLC ±-
ANGLES ±-

MATERIAL - -
FINISH - -

| | | |
|---|---|---|
| DWN | K HUANG | 27SEP2017 |
| CHK | L ZHANG | 27SEP2017 |
| APVD | L ZHANG | 27SEP2017 |
| PRODUCT SPEC | - | |
| APPLICATION SPEC | - | |
| WEIGHT | - | |

TE Connectivity
Harrisburg, PA 17105-3608

NAME: Ocean Side Feed Applicator -

| SIZE | CAGE CODE | DRAWING NO | RESTRICTED TO |
|---|---|---|---|
| A1 | 00779 | C-2836941 | - |

Customer Accessible Production Drawing | SCALE 1:2 | SHEET 2 OF 4 | REV A

AMP 4805 REV 31MAR2000

SHEETS 3 & 4 ARE NOT REQUIRED FOR ATLANTIC VERSION

| 8 | 7 | 6 | 5 | 4 | 3 | 2 | 1 |
|---|---|---|---|---|---|---|---|

THIS DRAWING IS UNPUBLISHED. RELEASED FOR PUBLICATION 20
© COPYRIGHT 20 BY TYCO ELECTRONICS CORPORATION. ALL RIGHTS RESERVED.

| SET UP GAUGE | LOC | DIST |
|---|---|---|
| 2119599-1 | A | 66 |

| REVISIONS | | | | | |
|---|---|---|---|---|---|
| P | LTR | DESCRIPTION | DATE | DWN | APVD |
| | - | SEE SHEET 1 | - | - | - |

| PACIFIC VERSION TERMINATOR INTERFACE ADAPTER | PART NUMBER | REVISION | DESCRIPTION | FEED TYPE | APPLICATOR STYLE CONVERSION CHART: CONVERT TO | PART NUMBERS REQUIRED | | | | | |
|---|---|---|---|---|---|---|---|---|---|---|---|
| 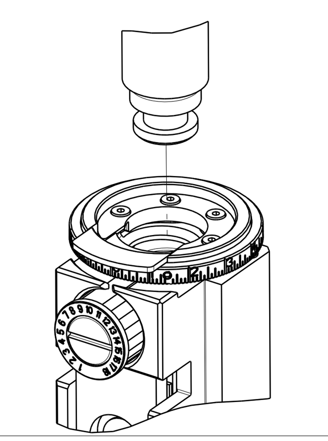 | 2-2836941-1 | A | FINE CRIMP HEIGHT ADJUST | MECHANICAL | PNEUMATIC FEED | 2119950-1 | 1338685-1 | 5-18022-5 | 2119641-2 | 2119799-1 | 2063440-1 |
| | | | | | SERVO LATCH PLATE | 2119951-1 | - | 8-2836941-5 | 1901094-3 | - | 2168400-6 (QUANTITY 2) |
| | | | | | SMART APPLICATOR | 2161326-1 | - | 8-2836941-4 | - | - | - |
| | 2-2836941-2 | A | FINE CRIMP HEIGHT ADJUST | PNEUMATIC | MECHANICAL FEED | 2119949-1 | 1338685-1 | 5-18022-5 | 2119653-2 | - | - |
| | | | | | SERVO LATCH PLATE | 2119951-1 | - | 8-2836941-5 | 1901094-3 | - | 2168400-6 (QUANTITY 2) |
| | | | | | SMART APPLICATOR | 2161326-1 | - | 8-2836941-4 | - | - | - |
| | 2-2836941-5 | A | FINE CRIMP HEIGHT ADJUST | SERVO LATCH PLATE (4) | MECHANICAL FEED | 2119949-1 | 1338685-1 | 5-18022-5 | 2119653-2 | - | - |
| | | | | | PNEUMATIC FEED | 2119950-1 | 1338685-1 | 5-18022-5 | 2119641-2 | 2119799-1 | 2063440-1 |
| | 2-2836941-7 | A | FINE CRIMP HEIGHT ADJUST | NONE | - | - | - | - | - | - | - |
| | 7-2836941-7 | A | CRIMP TOOLING KIT | - | - | - | - | - | - | - | - |

| APPLICATOR DATA | | |
|---|---|---|
| CRIMP | SIZE | TYPE |
| WIRE | 1.40 mm [.055] | F |
| INSUL | 1.65 mm [.065] | O |
| APPLICATOR INSTRUCTIONS 408-10389 | | |

| TERMINAL DATA: HU LANE TERMINAL | | TE CRIMP SPECIFICATION | |
|---|---|---|---|
| TERMINAL NAME: 0.64 SERIES TERMINAL | | | |
| WIRE STRIP LENGTH 3.57-4.33 mm [.141-.171 IN] | | INSULATION DIAMETER RANGE ∅1.22-1.63 mm [.048-.064 IN] | |
| TERMINAL APPLICATION SPECIFICATION | NONE | - | - |
| | - | - | - |
| TERMINALS APPLIED | | | |
| TE TERMINAL | HU LANE TERMINAL | TE TERMINAL | HU LANE TERMINAL |
| 2318392-1 | 6805803KSS | | |

| WIRE SIZE | CRIMP HEIGHT mm [INCH] | CRIMP HEIGHT (9) REFERENCE SETTING |
|---|---|---|
| 0.50mm2 | 1.03+/-0.05 [.041+/-.002] | 9.3 |
| 0.35mm2 | 0.91+/-0.05 [.036+/-.002] | 10.8 |

(1) RECOMMENDED SPARE PARTS

(2) GREASE BEARING SURFACES LIGHTLY

3. LUBRICATE DAILY PER THE APPLICATOR INSTRUCTION SHEET SUPPLIED WITH THE APPLICATOR.

(4) APPLICATOR SPECIFIC DATA TO BE ENTERED INTO BLANK MEMORY CHIP AT ASSEMBLY. SEE BELOW FOR PART NUMBER;
MECHANICAL FEED WITH "SMART APPLICATOR" CONVERSION: 8-2836941-4
PNEUMATIC FEED WITH "SMART APPLICATOR" CONVERSION: 8-2836941-4
SERVO FEED WITH "FINE CRIMP HEIGHT ADJUST": 8-2836941-5

5. ADJUSTMENT OF THE STRIPPER MAY BE REQUIRED WHEN MOVING THE APPLICATOR BETWEEN BENCH AND LEADMAKER APPLICATIONS.

(6) APPLY PART NUMBER 1-23419-5 LOCTITE TO THREADS OF ITEM 62. APPLY PART NUMBER 2-23419-6 LOCTITE TO THREADS OF ITEM 242.

(7) GREASE THREADS, GROOVE AND O-RING ON ITEMS 139 & 152.

(8) MAGNET MUST BE ORIENTED CORRECTLY IN ORDER TO PROPERLY ACTUATE THE COUNTER.

(9) CRIMP HEIGHT REFERENCE SETTING WAS THE SETTING USED WHEN THE APPLICATOR WAS QUALIFIED AT THE FACTORY. ADJUSTMENT MAY BE NECESSARY WHEN RUNNING APPLICATOR IN THE FIELD.

(10) SPARE FEED CAM STORAGE LOCATION REFER TO INSTRUCTION SHEET FOR ADDITIONAL INFORMATION.

(11) TO CONVERT THE APPLICATOR TO A NON-CARRIER CUTTING STYLE, REMOVE ITEM 13 AND ATTACH TO THE LOCATION ON BACK SIDE OF THE HOUSING. REFER TO INSTRUCTION SHEET FOR ADDITIONAL INFORMATION.

*WARNING
ON INSTALLATION, SET WIRE DISC, ITEM 40 TO LARGEST WIRE SIZE SETTING. USE OF SETTINGS BELOW MINIMUM REQUIRED CRIMP HEIGHT SETTING WILL CAUSE DAMAGE TO CRIMP TOOLING.

| NOTE | -77 | -27 | -25 | -22 | -21 | PART NO | DESCRIPTION | ITEM NO |
|---|---|---|---|---|---|---|---|---|
| | - | 1 | 1 | 1 | 1 | 2119782-1 | FINE ADJUST HEAD ASM, PACIFIC STYLE | 251 |
| | - | - | - | 1 | - | 2119640-1 | PUSH ROD, AIR FEED | 250 |
| | - | - | - | 1 | - | 1803259-1 | BUSHING, FLANGED | 249 |
| | - | 1 | 1 | 1 | 1 | 1-22279-3 | SPRING, COMPRESSION | 246 |
| | - | 1 | 1 | 1 | 1 | 2119082-5 | CAM, SNAIL, INSULATION ADJUSTMENT | 244 |
| | - | 1 | 1 | 1 | 1 | 2079764-1 | WASHER, WAVE SPRING, CREST-TO-CREST | 243 |
| (6) | - | 1 | 1 | 1 | 1 | 2119083-1 | RETAINER, INSULATION DIAL | 242 |
| | - | 1 | 1 | 1 | 1 | 7-18023-7 | SCR, SKT HD CAP M3 X 4.0 | 241 |
| | - | - | 2 | - | - | 2168400-6 | SHCS, LOW HEAD, RoHS, M5 X 16 | 240 |
| | - | - | - | - | 1 | 2119580-1 | MECHANICAL FEED ASSEMBLY | 239 |
| | - | - | - | 1 | - | 2063440-1 | AIR FEED MODULE | 238 |
| | - | - | 1 | - | - | 2119740-2 | TAG,IDENTIFICATION | 213 |
| | - | - | 1 | - | - | 1901094-3 | SPACER, FEEDER | 198 |
| | - | - | - | 2 | - | 21045-3 | RING, RETAIN, EXTERN, 3/16 CRESCENT | 172 |
| | - | 1 | 1 | 1 | 1 | 994969-1 | MAGNET, RARE EARTH HIGH ENERGY | 166 |
| | - | REF | REF | REF | REF | 994970-2 | COUNTER, MAGNETIC | 164 |
| | - | - | - | 1 | - | 240638-1 | SPRING, FEED FINGER | 163 |
| (7) | - | 1 | 1 | 1 | 1 | 8-21084-1 | O-RING, .801 ID, .070 DIA. MAT. | 152 |
| | - | - | - | 1 | - | 2119641-2 | FEED CAM, AIR FEED | 151 |
| | - | 1 | 1 | 1 | 1 | 2119798-2 | DETENT PIN | 145 |
| | - | 1 | 1 | 1 | 1 | 2079383-8 | SCR, BHSC, RoHS (M4 X 16) | 144 |
| | - | 4 | 4 | 4 | 4 | 2168400-5 | SHCS, LOW HEAD, RoHS, M4 X 20 | 143 |
| | - | - | - | - | 1 | 2119653-2 | FEED CAM, POST FEED | 142 |
| | - | 1 | 1 | 1 | 1 | 1-2119656-0 | APPLICATOR BASIC ASSEMBLY, SF | 141 |
| | - | 1 | 1 | 1 | 1 | 2119650-1 | RAM, ASIAN STYLE, SIDE FEED | 140 |
| (7) | - | 1 | 1 | 1 | 1 | 2119092-2 | BOLT, ADJUSTMENT | 139 |
| | - | - | - | 1 | - | 3-23627-7 | PIN, RETAIN, GRVD, 3/16 X .854 | 137 |
| | - | - | - | 1 | - | 2119799-1 | HOLDER,FEED FINGER, AF | 136 |
| | - | - | REF | - | - | SEE NOTE 4 | MEMORY CHIP, PROGRAMMED | 135 |
| | - | - | 1 | - | - | 1633743-1 | SERVO FEED LATCH ASM | 133 |
| | - | - | REF | - | - | 2119944-1 | FEED FINGER ASSEMBLY,SF | 117 |
| | - | 1 | 1 | 1 | 1 | 455888-7 | SPACER, CRIMPER | 82 |
| | - | 1 | 1 | 1 | 1 | 2119956-1 | DOCUMENTATION PACKAGE | 71 |
| | - | 1 | - | 1 | 1 | 2119740-1 | TAG,IDENTIFICATION | 67 |
| | - | 2 | 2 | 2 | 2 | 2168078-1 | SCREW, DRIVE, RH, RoHS, 2 x .188 | 66 |
| | - | 1 | 1 | 1 | 1 | 2119793-1 | LIMITER, ADJUSTMENT BOLT | 63 |
| (6) | - | 3 | 3 | 3 | 3 | 992763-5 | SCR, SET, SOC, CONE PNT, M3 x 4.0 | 62 |
| | - | - | - | 1 | 1 | 5-18022-5 | SCR, HEX HD CAP, M4 X 6.0 | 59 |
| | - | - | - | 1 | 1 | 1338685-1 | PAWL, FEED | 56 |
| | - | 2 | 2 | 2 | 2 | 1-2168083-0 | SCR, SKT HD CAP, RoHS, M4 X 10 | 53 |
| | - | 1 | 1 | 1 | 1 | 5018030-1 | NUT, HEX, REG, RoHS, M3 | 52 |
| | - | 1 | 1 | 1 | 1 | 811242-5 | BUMPER, HOLD DOWN | 51 |
| | - | 1 | 1 | 1 | 1 | 690753-2 | SPACER, TONKER | 50 |
| | - | - | - | 1 | 2 | 18023-9 | SCR, SKT HD CAP M4 X 6.0 | 49 |
| | - | - | - | - | 1 | 2119652-1 | FEED CAM, PRE FEED | 48 |
| | - | 1 | 1 | 1 | 1 | 2079383-7 | SCR, BHSC, RoHS (M8 X 25) | 41 |
| | - | 1 | 1 | 1 | 1 | 2119645-1 | DISC, NUMBERED FA WIRE ADJUSTMENT | 40 |
| | - | 1 | 1 | 1 | 1 | 2119957-1 | APPLICATOR SHIM PACK | 39 |
| | - | 1 | 1 | 1 | 1 | 1-2119644-2 | RAM WASHER, PRECISION | 38 |
| | - | 1 | 1 | 1 | 1 | 3-1752356-4 | SUPPORT, TERMINAL | 34 |
| | - | 2 | 2 | 2 | 2 | 2079383-5 | SCR, BHSC, RoHS (M4 X 20) | 33 |
| | - | 1 | 1 | 1 | 1 | 2161328-1 | HEX HEAD, FLANGED, M5 x 8mm LONG | 32 |
| | - | 1 | 1 | 1 | 1 | 1320908-3 | SPACER, STRIP GUIDE | 30 |
| | - | 1 | 1 | 1 | 1 | 2119959-1 | ASSEMBLY, STRIP GUIDE | 29 |
| | - | 1 | 1 | 1 | 1 | 455888-3 | SPACER, CRIMPER | 28 |
| | - | 1 | 1 | 1 | 1 | 1320928-2 | STRIP GUIDE | 24 |
| | - | 1 | 1 | 1 | 1 | 2168083-2 | SCR, SKT HD CAP, RoHS, M4 X 8.0 | 21 |
| | - | 2 | 2 | 2 | 2 | 1-18028-2 | WASHER, FLAT, REG M4 | 20 |
| | - | 1 | 1 | 1 | 1 | 2119533-1 | STRIPPER, SIDE FEED | 19 |
| (11) (1) | - | 1 | 1 | 1 | 1 | 2119806-1 | INSERT, SHEAR | 13 |
| | - | 1 | 1 | 1 | 1 | 3-22280-3 | SPRING, COMPRESSION | 12 |
| | - | 1 | 1 | 1 | 1 | 1-356885-4 | STOP, SHEAR | 11 |
| (1) | - | 1 | 1 | 1 | 1 | 2119805-1 | SHEAR HOLDER, FRONT | 10 |
| (1) | - | 1 | 1 | 1 | 1 | 1803095-1 | FLOATING SHEAR, FRONT - | 9 |
| (1) | 1 | 1 | 1 | 1 | 1 | 3-1803250-4 | ANVIL, COMBINATION | 8 |
| | - | - | - | - | - | - | - | 7 |
| | - | - | - | - | - | - | - | 6 |
| | - | 1 | 1 | 1 | 1 | 2119757-4 | DEPRESSOR, SHEAR | 5 |
| | - | 1 | 1 | 1 | 1 | 2-238011-8 | BLOCK, CRIMPER SPACER | 4 |
| (1) | 1 | 1 | 1 | 1 | 1 | 7-2119784-5 | CRIMPER, INSULATION O PREMIUM | 3 |
| | - | 1 | 1 | 1 | 1 | 455888-3 | SPACER, CRIMPER | 2 |
| (1) | 1 | 1 | 1 | 1 | 1 | 1-456402-4 | CRIMPER, WIRE PREMIUM | 1 |

PACIFIC VERSION
Shown on sheets 3 of 4 & 4 of 4
(Atlantic version shown on sheets 1 of 4 & 2 of 4)

THIS DRAWING IS A CONTROLLED DOCUMENT FOR TYCO ELECTRONICS CORPORATION. IT IS SUBJECT TO CHANGE AND THE CONTROLLING ENGINEERING ORGANIZATION SHOULD BE CONTACTED FOR THE LATEST REVISION.

DIMENSIONS: mm

TOLERANCES UNLESS OTHERWISE SPECIFIED:
0 PLC ±-
1 PLC ±-
2 PLC ±-
3 PLC ±-
4 PLC ±-
ANGLES ±-

MATERIAL -
FINISH -

DWN K.HUANG 27SEP2017
CHK L.ZHANG 27SEP2017
APVD L.ZHANG 27SEP2017
PRODUCT SPEC -
APPLICATION SPEC -
WEIGHT -

TE Connectivity
Harrisburg, PA 17105-3608

NAME
Ocean Side Feed
Applicator
-

SIZE A1 | CAGE CODE 00779 | DRAWING NO C-2836941 | RESTRICTED TO -

Customer Accessible Production Drawing | SCALE 1:2 | SHEET 3 OF 4 | REV A



SHEETS 1 & 2 ARE NOT REQUIRED FOR PACIFIC VERSION

THIS DRAWING IS UNPUBLISHED. RELEASED FOR PUBLICATION 20
© COPYRIGHT 20 BY TYCO ELECTRONICS CORPORATION. ALL RIGHTS RESERVED.

| LOC | DIST |
|---|---|
| A | 66 |

REVISIONS

| P | LTR | DESCRIPTION | DATE | DWN | APVD |
|---|---|---|---|---|---|
| | - | SEE SHEET 1 | - | - | - |

# FEED TYPE

## MECHANICAL

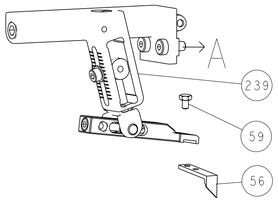


## PNEUMATIC

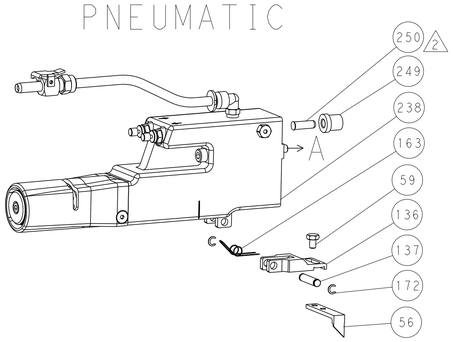


## SERVO LATCH PLATE

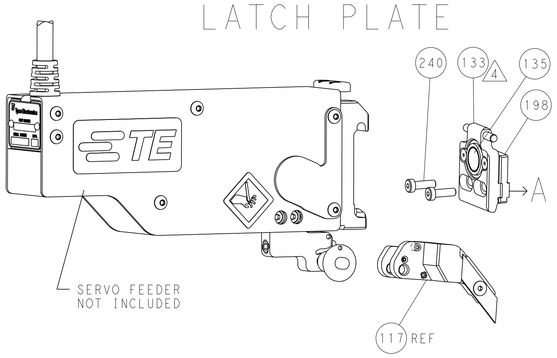


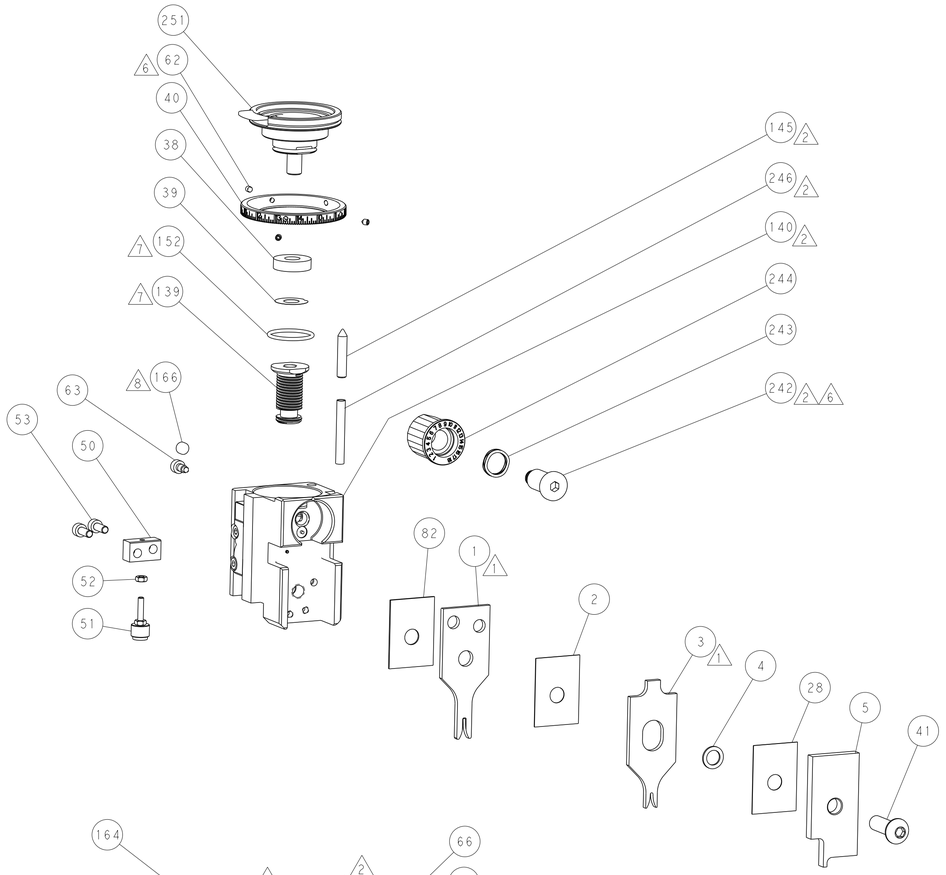


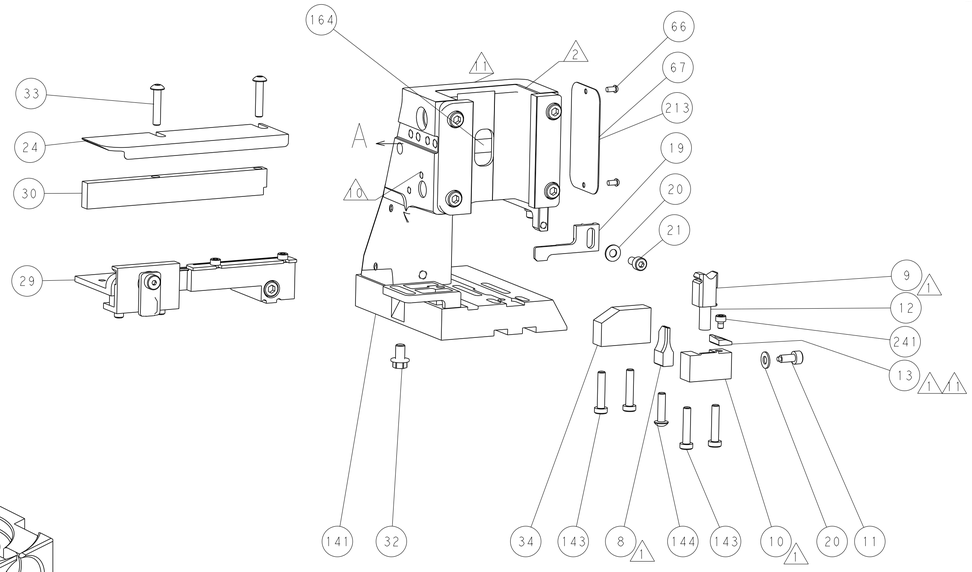


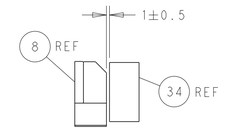


TERMINAL SUPPORT LOCATION

ITEM 30 LOCATED AT
FRONT HOLES

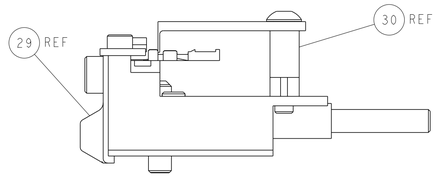


FEED TRACK POSITION
GUIDE BY INSULATION BARREL

## CAM POSITIONS

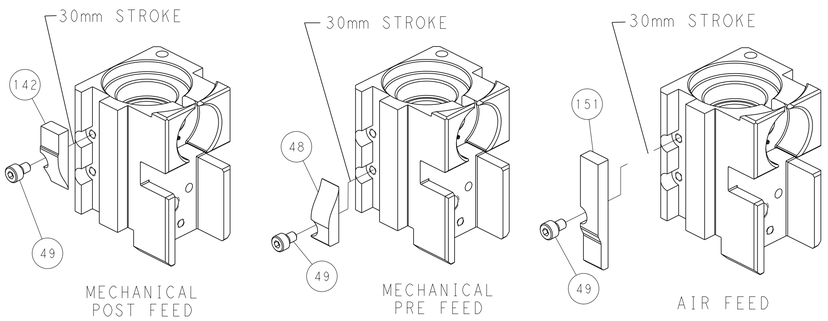


# PACIFIC VERSION

Shown on sheets 3 of 4 & 4 of 4
(Atlantic version shown on sheets 1 of 4 & 2 of 4)

THIS DRAWING IS A CONTROLLED DOCUMENT FOR TYCO ELECTRONICS CORPORATION
IT IS SUBJECT TO CHANGE AND THE CONTROLLING ENGINEERING ORGANIZATION
SHOULD BE CONTACTED FOR THE LATEST REVISION.

DIMENSIONS: mm

TOLERANCES UNLESS OTHERWISE SPECIFIED:
0 PLC ±-
1 PLC ±-
2 PLC ±-
3 PLC ±-
4 PLC ±-
ANGLES ±-

MATERIAL - - -
FINISH - -

| | | |
|---|---|---|
| DWN | K HUANG | 27SEP2017 |
| CHK | L ZHANG | 27SEP2017 |
| APVD | L ZHANG | 27SEP2017 |

PRODUCT SPEC -
APPLICATION SPEC -
WEIGHT -

TE Connectivity
Harrisburg, PA 17105-3608

NAME: Ocean Side Feed Applicator -

| SIZE | CAGE CODE | DRAWING NO | RESTRICTED TO |
|---|---|---|---|
| A1 | 00779 | C-2836941 | - |

Customer Accessible Production Drawing | SCALE 1:2 | SHEET 4 OF 4 | REV A

AMP 4805 REV 31MAR2000

SHEETS 1 & 2 ARE NOT REQUIRED FOR PACIFIC VERSION

# X-ON Electronics

Largest Supplier of Electrical and Electronic Components

***Click to view similar products for*** Bench Top Tools ***category:***

***Click to view products by*** TE Connectivity ***manufacturer:***

Other Similar products are found below :

0027 6104-201-2102 6104-201-2502 6-1372442-6 62500-1584 63801-7252 63801-7269 69002-5525 691667-1 7-18023-8 768539-1 854946-2 856203-1 904449-1 9-22280-9 986096-2 992438-3 1-21000-3 1-21000-1 1-25022-4 1424264-1 1424267-1 1428211-1 1-455755-6 1752324-1 18023-9 189763-1 1901726-1 1954222-1 2079747-1 21001-2 2119083-1 2119371-1 2161362-2 2161930-1 2217088-2 2217339-1 2217347-1 22374-7 240825-4 992342-2 2030790-2 2063796-1 2063799-2 2119092-1 2119644-1 2119645-1 2161362-1 2168400-1 217866-1