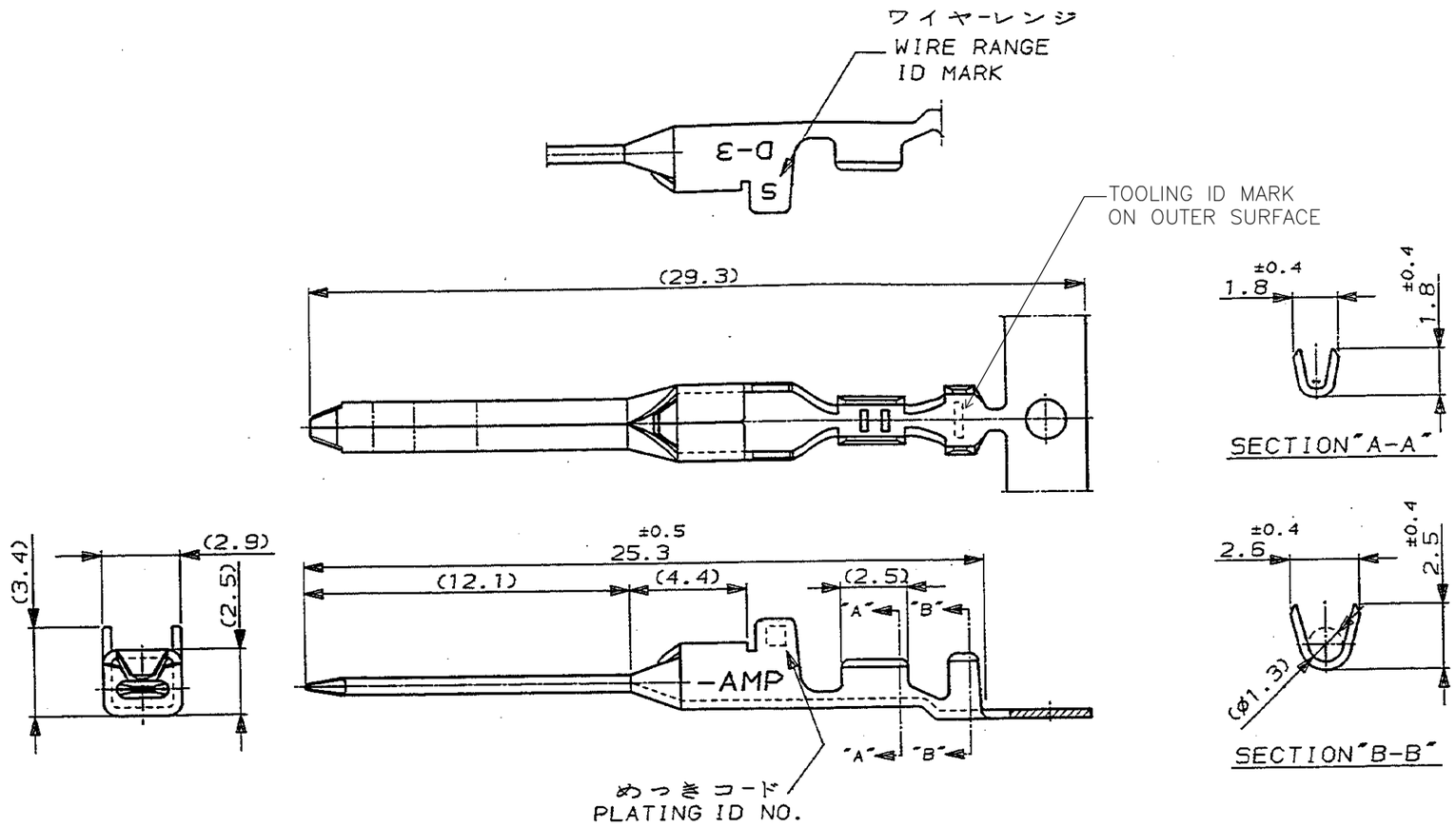

注記

⚠1 金めっきは接触部のみとする

NOTE

⚠1 GOLD-PL. CONTACT AREA ONLY

めっきコード (PL. ID NO.)	仕上 (FINISH)		型番 (P/N)
5	光沢錫めっき (BRIGHT TIN-PL.)		-5
3	⚠1 0.76μm最小金めっき (0.76μmMIN. Au-PL.)		-3
2	⚠1 0.38μm最小金めっき (0.38μmMIN. Au-PL.)		175284-2

LTR	変更 (REVISION RECORD)	DR	CHK	DATE
A	REVISED PER ECR-15-011723	Y.O	E.T	10AUG 2015
0	RELEASED (ECN J-13171)	NM	Y.O 5-MAR-92	5-5 5-MAR-92

TE Connectivity

適合電線断面積 (WIRE RANGE) AWG 28-24	被覆外径 (INSULATION DIA.) 0.8-1.4 mmφ	名称 (NAME) "S" SIZE ダイナミック D-3シリーズタブコンタクト	(DYNAMIC D-3 SERIES TAB. CONTACT)
材料 (MATERIAL) (COPPER ALLOY) 銅合金	仕上 (FINISH) (SEE TABLE) 表参照	一般公差 (GENERAL TOLERANCE) 10以下 ±0.2, 10を超え30以下 ±0.25, 30を超え100以下 ±0.3, 角度 ±3°	SIZE B / LOC J / 番号 (No.) C-175284
DR. 2 MAR 92 N. Matsubara	DE. 2 MAR 92 N. Matsubara		尺度 (SCALE) 5-1 / REV. A / SHEET 1 OF 1
CHK. 4 MAR '92	APP. 5-MAR-'92 S. MANABE		

(CUSTOMER DRAWING) 参考図面

NUMBER C-175284

三角法 (3rd ANGLE PROJECTION)

METRIC

WAS 91-25168-2,4,5

U.855-111>U.DWG>S.C89-25173 単位: 粍 DIMENSIONS IN MM. DO NOT SCALE PRINT

PRINT DIST

AMP-J REV.10/'83

X-ON Electronics

Largest Supplier of Electrical and Electronic Components

Click to view similar products for Headers & Wire Housings ***category:***

Click to view products by TE Connectivity ***manufacturer:***

Other Similar products are found below :

892-18-020-10-001101 58102-G61-06LF 582553-1 0009485154 009176003701906 0050291907 LY20-4P-DT1-P1E-BR 02.125.8002.8 609-3404 61062-3 61082-181009 622-3653LF 63453-116 636-1030 636-1427 636-3427 636-4007 641938-9 641991-4 644827-2 65817-010LF 65817-015LF 65863-015LF 66207-023LF 67095-007LF 67601157 68645-018 68648-049 70.362.1628.0 70-4210 70-4226B 70-4853B 707-5020 707-5028 71.350.2428.0 71918-208LF 71961-016LF 733-134 733-162 754199-000 760-3052 787-8014-00 79531-3000 FCN-360C032-B FCN-367T-T012/H FCN-723D010/2 80.063.4001.1 800-90-001-10-001000 800-90-010-10-002000 801-43-002-10-013000