THIS DRAWING IS UNPUBLISHED. RELEASED FOR PUBLICATION 2006
© COPYRIGHT 2006 BY TYCO ELECTRONICS CORPORATION, ALL RIGHTS RESERVED.

| LOC | DIST |
|---|---|
| A1 | - |

REVISIONS

| P | LTR | DESCRIPTION | DATE | DWN | APVD |
|---|---|---|---|---|---|
| | G1 | ECR-07-012716 | 30MAY2007 | GP | GM |
| | G2 | ECR-20-012259 | 31AUG2020 | VKS | KR |

A-A

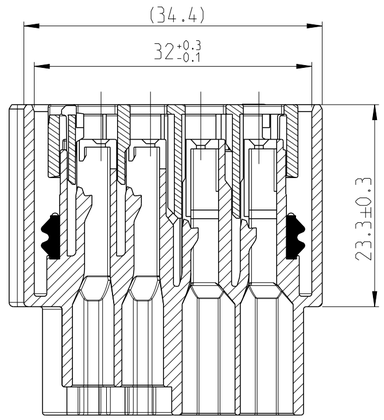


B-B

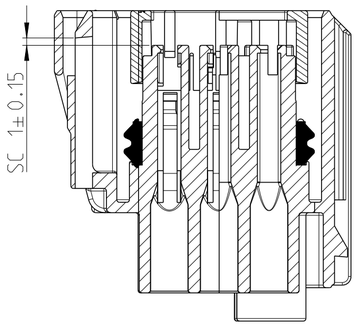


| | | | | | | | | | | | | | |
|---|---|---|---|---|---|---|---|---|---|---|---|---|---|
| | | | | | X | X | X | X | X | | | 2-1452299-1 | B |
| X | X | X | X | X | X | X | X | X | X | X | X | 0-1452299-3 | C |
| X | X | X | X | X | X | X | X | X | X | X | X | 0-1452299-2 | B |
| X | X | X | X | X | X | X | X | X | X | X | X | 0-1452299-1 | A |
| 1 | 2 | 3 | 4 | 5 | 6 | 7 | 8 | 9 | 10 | 11 | 12 | ASSY NO | CODING |
| WITH "X" MARKED INDICATE OPEN LOCATIONS FOR TERMINALS<br>Markierte Felder mit "X" kennzeichnen offene Kammern fuer Kontakte | | | | | | | | | | | | | |
| BLANKED CAVITIES INDICATE CLOSED LOCATIONS<br>Leere Felder kennzeichnen geschlossene Kammern | | | | | | | | | | | | | |

1.5MM FEMALE TERMINAL SEALED
SUITABLE TERMINALS: FORD CAT2 (SUPPLIER YAZAKI)
2.8MM FEMALE TERMINAL SEALED
SUITABLE TERMINALS: FORD CAT3 (SUPPLIER YAZAKI OR TYCO)

**OPTINAL FEATURES:**
**Optioanale Merkmale:**

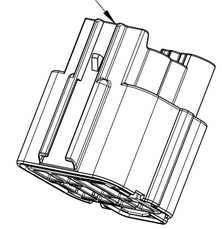

1:1

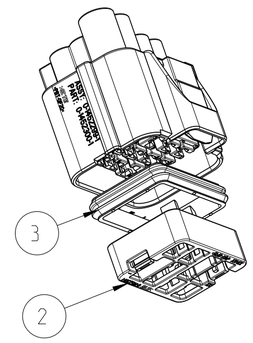


**CODING A**
**Kodierung A**

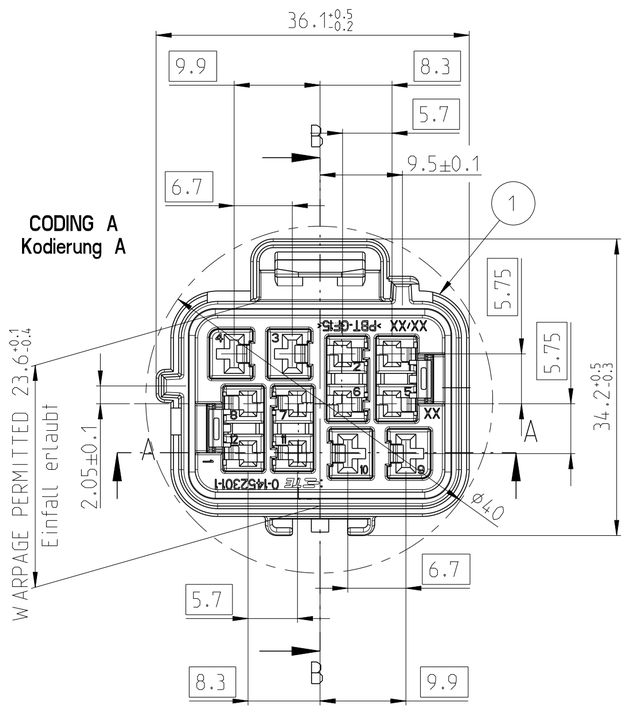


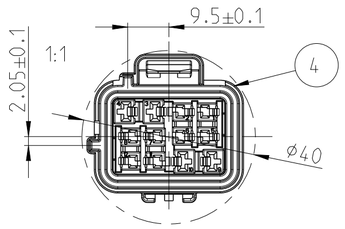


**CODING B**
**Kodierung B**

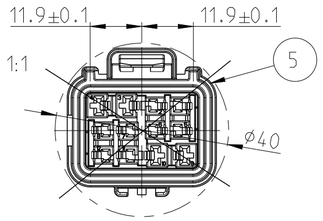


**CODING C**
**Kodierung C**

NOTES:
Bemerkungen:

1 DELIVERY CONDITION: SPACER IN PRE LOCK POSITION
Anlieferungszustand: Spacer in Vorraststellung

SC SIGNIFICANT CHARACTERISTIC
Significantes Merkmal

G2 APPLICABLE COMPONENTS

| ITEM | DESCRIPTION | PLATING/ MATERIAL | TE PART NO. | YAZAKI PART NO. |
|---|---|---|---|---|
| 1 | 1.5mm FEMALE TERMINAL SYSTEM (0.35-0.5mm2) | TIN | - | 7116-4102-02 |
| | 1.5mm FEMALE TERMINAL SYSTEM (0.75-1.0mm2) | TIN | - | 7116-4103-02 |
| 2 | WIRE SEAL (1.5mm) (0.35-0.5mm2) (RED) | SILICONE | - | 7158-3030-50 |
| 3 | WIRE SEAL (1.5mm) (0.75-1.0mm2) (BLUE) | SILICONE | - | 7158-3031-90 |
| 4 | BLIND PLUG (1.5mm) (GREEN) | SILICONE | - | 7158-3032-60 |
| 5 | 2.8mm FEMALE TERMINAL SYSTEM (0.35mm2) | TIN | 0-1326032-1 | – |
| | 2.8mm FEMALE TERMINAL SYSTEM (0.5mm2) | TIN | 0-1326032-2 | – |
| | 2.8mm FEMALE TERMINAL SYSTEM (0.75-1.0mm2) | TIN | 0-1326032-3 | – |
| | 2.8mm FEMALE TERMINAL SYSTEM (AWG16) | TIN | 0-1326032-4 | – |
| | 2.8mm FEMALE TERMINAL SYSTEM (1.5-2.5mm2) | TIN | 0-1326032-5 | – |
| 6 | WIRE SEAL (2.8mm) (0.35-0.5mm2) (GREEN) | SILICONE | - | 7158-3111-60 |
| 7 | WIRE SEAL (2.8mm) (0.75-1.0mm2) (YELLOW) | SILICONE | - | 7158-3112-70 |
| 8 | WIRE SEAL (2.8mm) (1.5-2.5mm2) (WHITE) | SILICONE | - | 7158-3113-40 |
| 9 | BLIND PLUG (2.8mm) (BLUE) | SILICONE | - | 7158-3114-90 |

| | | | | | | | |
|---|---|---|---|---|---|---|---|
| 1x | | | | PBT-GF20 | FEMALE HSG. CODING B | green - | 6 |
| | 1x | | | PBT-GF20 | FEMALE HSG. CODING C | nature - | 5 |
| | | 1x | | PBT-GF20 | FEMALE HSG. CODING B | green - | 4 |
| 1x | 1x | 1x | 1x | SILICON | PERIPHERAL SEAL - | orange - | 3 |
| 1x | 1x | 1x | 1x | PBT-GF15 | SPACER - | red - | 2 |
| | | | 1x | PBT-GF20 | FEMALE HSG. CODING A | black - | 1 |
| | | | | MATERIAL | DESCRIPTION | COLOUR | ITEM NO |
| G | | G | G | REVISION OF EACH ASSY NO (WHEN BLANK, USE DWG REVISION) | | | |
| 19.2 | - | 19.2 | 19.2 | WEIGTH OF EACH ASSY NO [g] | | | |
| 2-1452299-1 | 0-1452299-3 | 0-1452299-2 | 0-1452299-1 | TYCO ASSY PN | | | |
| **B** | **C** | **B** | **A** | CODING | | | |
| 2-1452303-1 | 0-1452303-3 | 0-1452303-2 | 0-1452303-1 | MATING COMPONENT TYCO ASSY PN | | | |
| | | | | PARTS LIST | | | |

**2-1452299-1**
**CODING B**
**Kodierung B**

1:1

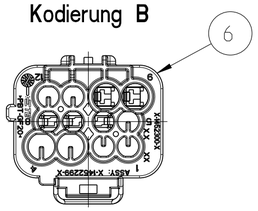


-1 AS SHOWN
wie gezeichnet

THIS DRAWING IS A CONTROLLED DOCUMENT FOR TYCO ELECTRONICS CORPORATION. IT IS SUBJECT TO CHANGE AND THE CONTROLLING ENGINEERING ORGANIZATION SHOULD BE CONTACTED FOR THE LATEST REVISION.

DIMENSIONS: mm

TOLERANCES UNLESS OTHERWISE SPECIFIED:
0 PLC ±-
1 PLC ±-
2 PLC ±-
3 PLC ±-
4 PLC ±-
ANGLES ±5

MATERIAL -
FINISH -

| | | |
|---|---|---|
| DWN | S. Denter | 15JUL2002 |
| CHK | G.PUCKEL | 04OCT2002 |
| APVD | G.MUMPER | 04OCT2002 |
| PRODUCT SPEC | - | |
| APPLICATION SPEC | - | |
| WEIGHT | - | |

tyco Electronics
tyco Electronics AMP GmbH
D - 64625 Bensheim

NAME: 12 POS. INLINER TO REAR BUMPER CON. ASSY FEMALE HOUSING

| SIZE | CAGE CODE | DRAWING NO | RESTRICTED TO |
|---|---|---|---|
| A2 | 00779 | C-1452299 | |

CUSTOMER DRAWING | SCALE 2:1 | SHEET 1 OF 1 | REV G2

# X-ON Electronics

Largest Supplier of Electrical and Electronic Components

***Click to view similar products for*** Automotive Connectors ***category:***

***Click to view products by*** TE Connectivity ***manufacturer:***

Other Similar products are found below :

003-018-000 60403001 60993906-B M902-2131 M902-2161 M902-2344 72.330.1035.1 73.353.4028.0 F119300-B F166900 F258300-B F358300-B F407400 F444110 F487000 F509500B-B 827153-1 8N1515-32-24P 9-1326729-8 925474-1 928905-1 964562-4 968782-1 GT17SA-8DS-HU 98891-1012 98947-1016 12004147 12004475-L 12010290 12010309-B 12015454 12020219-B 12041318-B 12052225-L 12052466 12064869 12004327-B 12015308 12015384 12015909 1-21030-1 12041254 12041318 12047946-B 12047957 12047957-L 12059473 12066261 12110546 12110546-B