INDUSTRIAL LOCKING SYSTEMS

RST ROZTOCZE

ROZTOCZE

APPLICATION SECTORS

ENERGY INDUSTRY

Steel Clamps

Swinghandles

RAILWAY TRANSPORT

Locks

Stainless Steel Hinges

ICT

Concealed Hinges

Mechatronic Locks

HVAC INDUSTRY

Sealing Profiles

TRANSPORTATION INDUSTRY

Vibration Resistant Locks

Joint hinges

MACHINE INDUSTRY

Toggle Latches

Handles

ROZTOCZE

Roztocze is a leading manufacturer of industrial closures in Europe. We offer our customers a wide range of products such as: locks, hinges, clamps, latches, gaskets, handles and customized solutions. Our assortment is used in the power industry, telecommunications, HVAC, construction, railways, automotive, machinery, marine and road industries.

ROZTOCZE

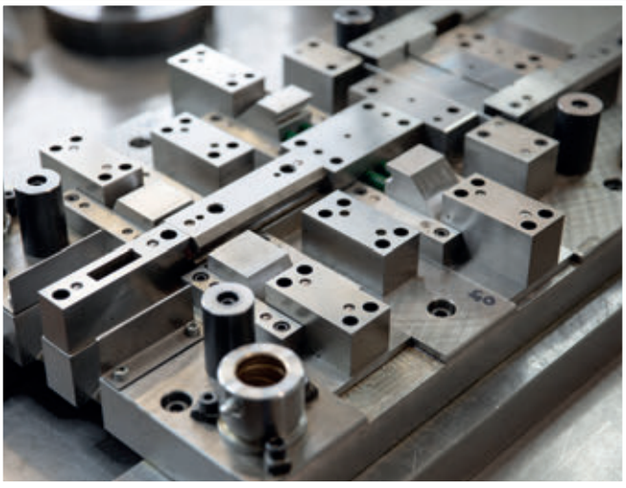

Since the beginning of its activity, the company has been focused on individual customer needs and industry demands for almost 30 years. Using our experience, modern machine park with CNC machine tools and our own Tool Room, we provide a broad range of design solutions trying to ensure that our ideas meet the needs of the market.

ROZTOCZE

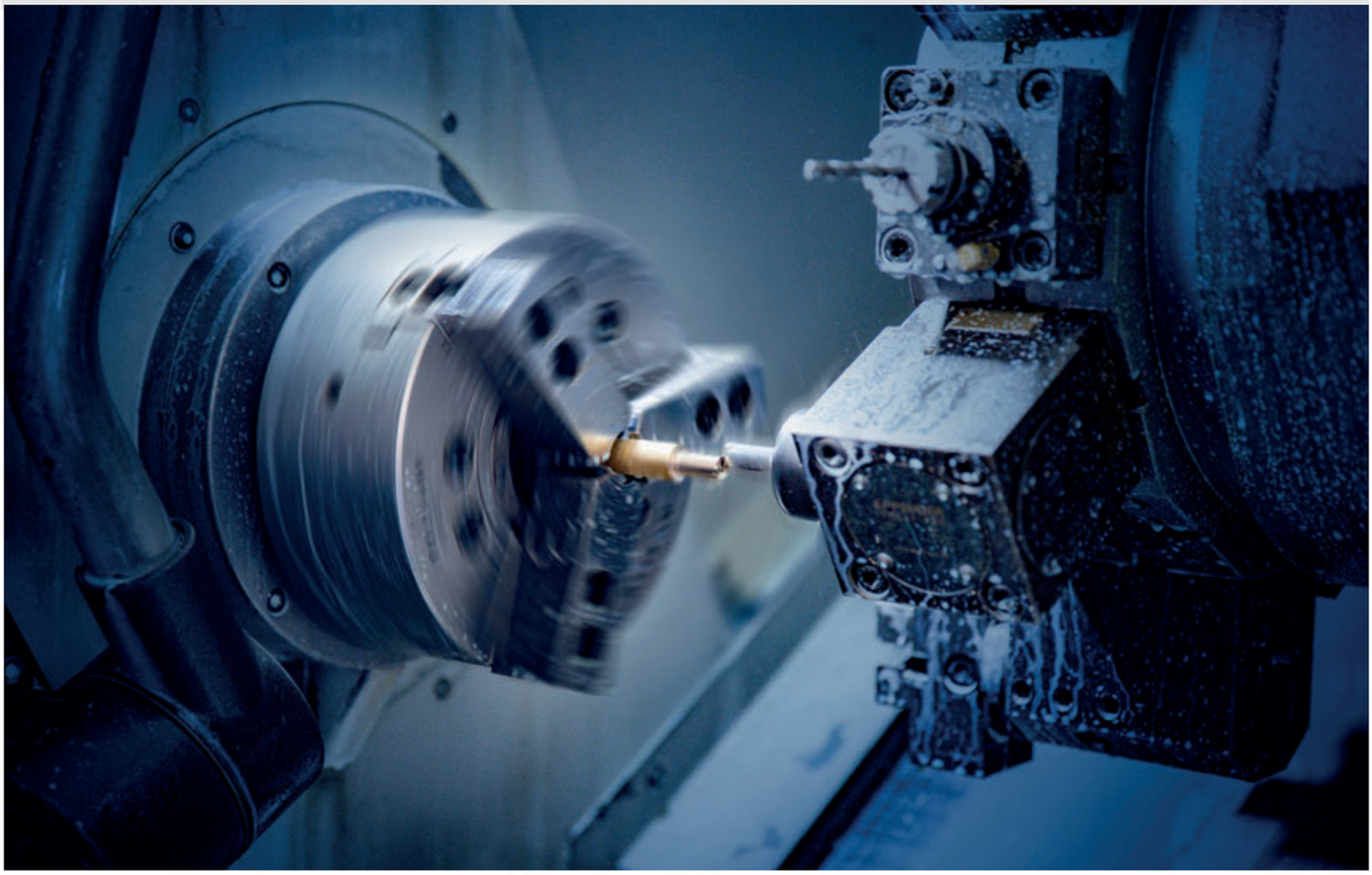

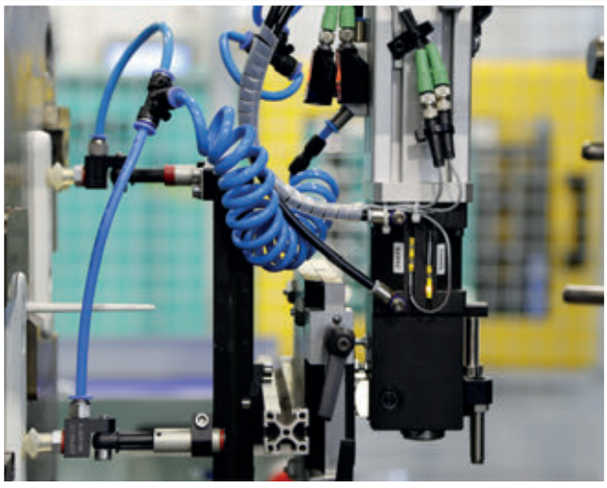

In our offer there are over 5,000 products manufactured in the Polish location in Tomaszów Lubelski. We employ over 760 people on 20 000 m2 of production area and use over 300 CNC numerical machines.

The support we provide to our business partners at the technological level allows them to gain market advantage and build brands of their products based on technological and quality-oriented features.

ROZTOCZE

We achieve the highest quality of services by monitoring and auditing ISO 9001 quality systems and the knowledge and skills of our team.

www.roztocze.eu

ROZTOCZE

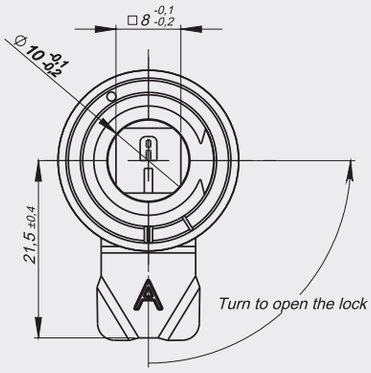

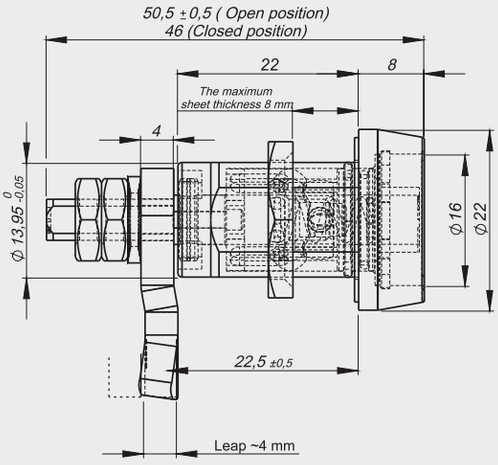

With the use of modern technologies, we offer our customers professional technological and engineering support in the areas of foundry of zinc alloys (ZAMAK), plastic injection, CNC machining, plastic and laser sheet metal processing, die-cutting and injection moulding as well as final machining.

ROZTOCZE

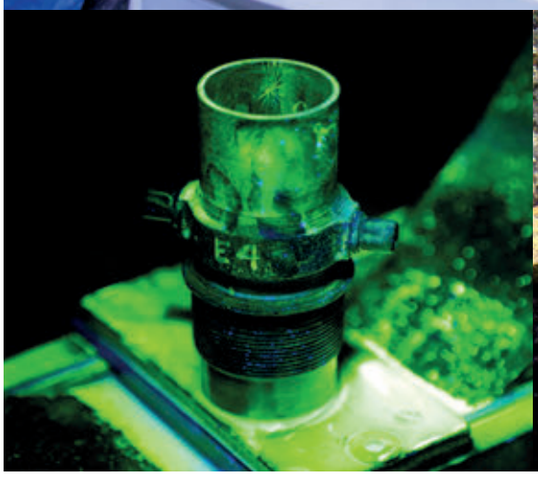

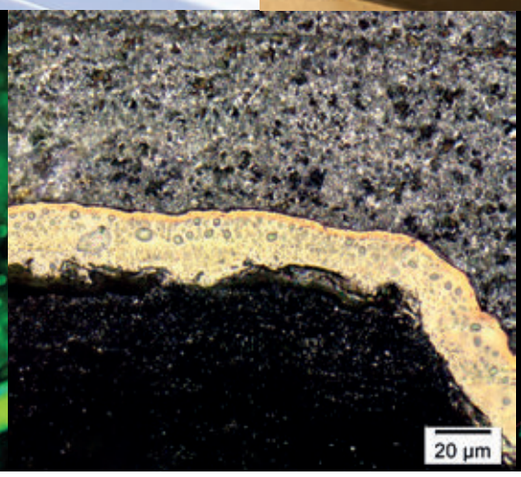

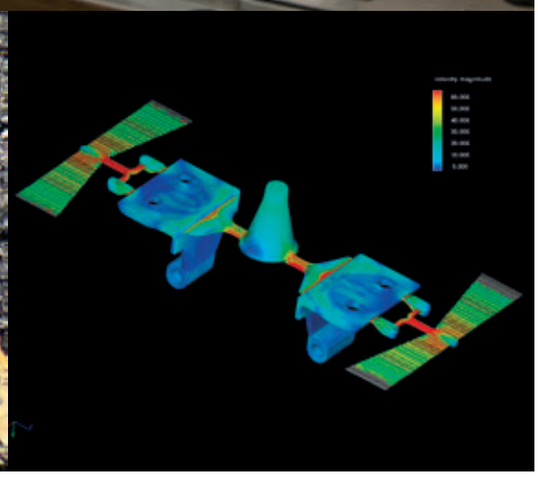

Our Research and Development Centre offers services in the field of microscopic and macroscopic examination of steels and plastics. We provide services of metallographic testing, chemical composition analysis, defectoscopic testing of material faults as well as resistance of metals and protective coatings according to DIN 50021, ASTM B117, ASTM G85, EN ISO 9227 in salt chambers, climatic chambers and strength testing in the range from 10 N to 100 N.

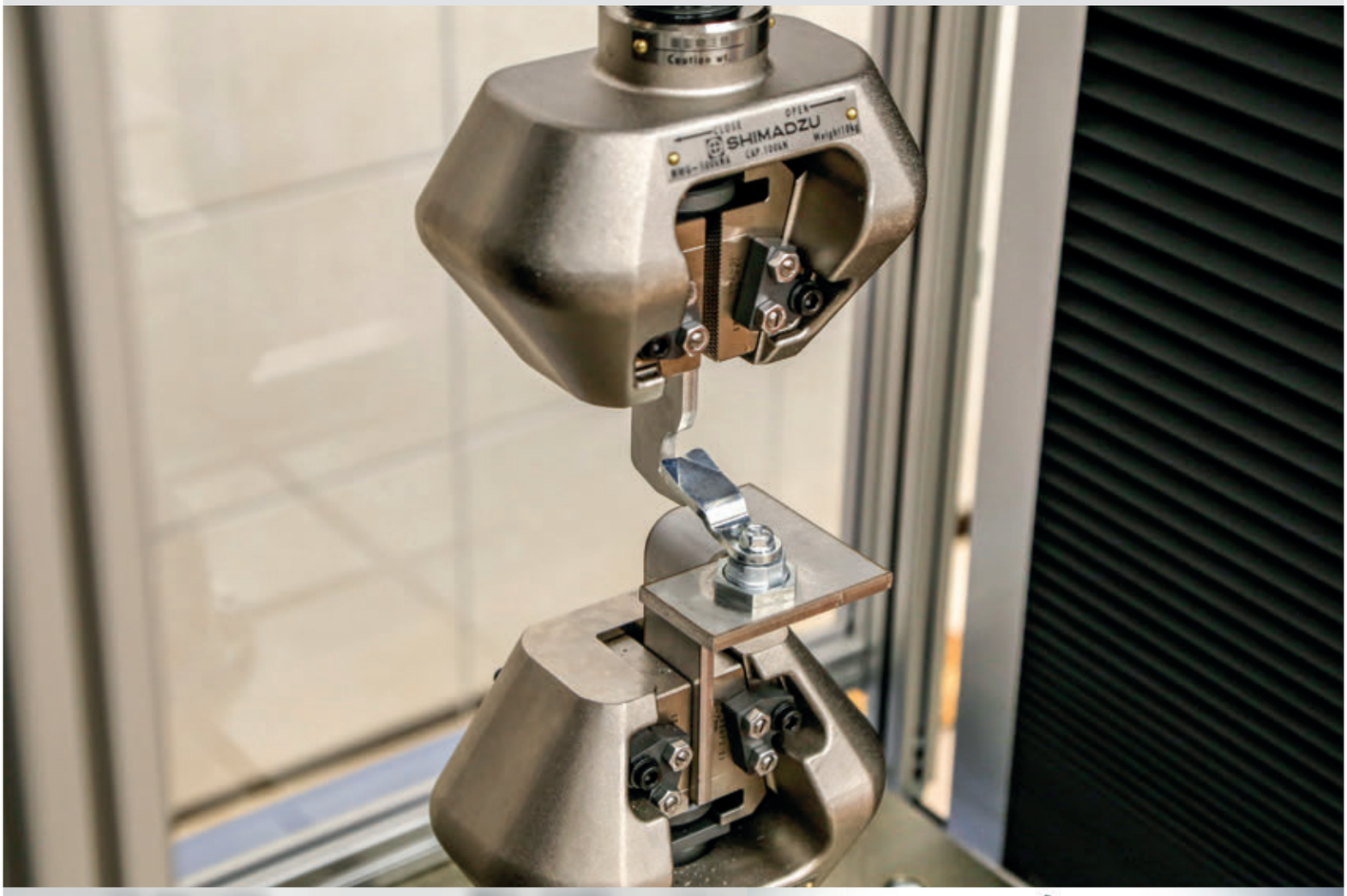

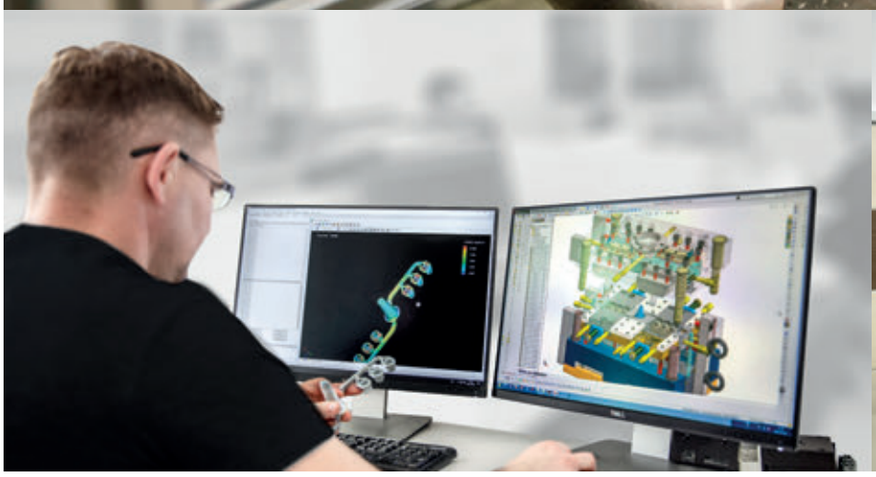

In the laboratory of prototypes we test a number of structures of locking systems. We examine, among others, the resistance to static loads and shear strength of hinges according to the PN-EN 1935 standard. While analyzing the properties and functionality of the structure, we are searching for possibilities of improving a given solution. We use 3D printing in Poly Jet technology which enables us to print prototype details from transparent materials having elastomer properties and high-temperature materials HDT min. 50°.

ROZTOCZE

www.roztocze.eu

Index

ROZTOCZE

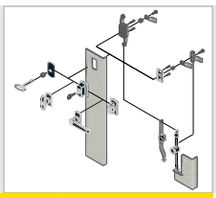

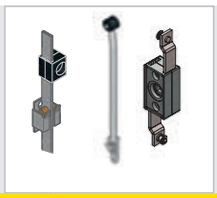

Locking systems **1A** | Swinghandles RS **1B** | Components **1C**

1 Locking systems

Locks **2A** | Latches **2B**

2 Locks Latches

External hinges **3A** | Internal hinges **3B**

3 Hinges

Clamps

4 Clamps

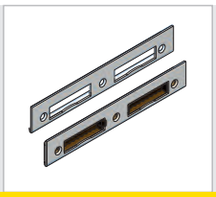

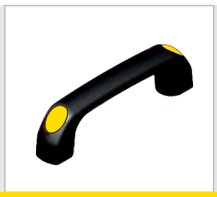

Accessories

5 Accessories

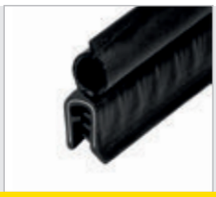

Gasketing profiles

6 Gasketing profiles

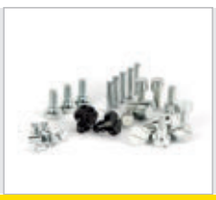

Custom products

7 Custom products

NEW	New
RoHS	Standard RoHS
1PL	1-point sytem
2PL	2-point system
3PL	3-point system
z x y	X, Y and Z axis adjustment
y x	X and Y axis adjustment
x	X-axis adjustment (horizontal)
y	Y-axis adjustment (vertical)
stainless steel	Stainless steel
LH/RH	The use left / right
RH	The use right
LH	The use left
	Version with padlock
IP55	Degree of protection IP 55
IP65	Degree of protection IP 65
IP66	Degree of protection IP 66
IP69K	Degree of protection IP 69K
120°	Opening angle

Finishing type [C]										
ZAMAK 5							Polyamide		Stainless steel	
Chrome	Nickel	Galvanized	RAL 9005	RAL 7035	KTL	No coating	RAL 9005	RAL 7035	304	316
01	02	03	04	05	06	0	07	08	9.1	9.2

Clarification of version **LH** and **RH**

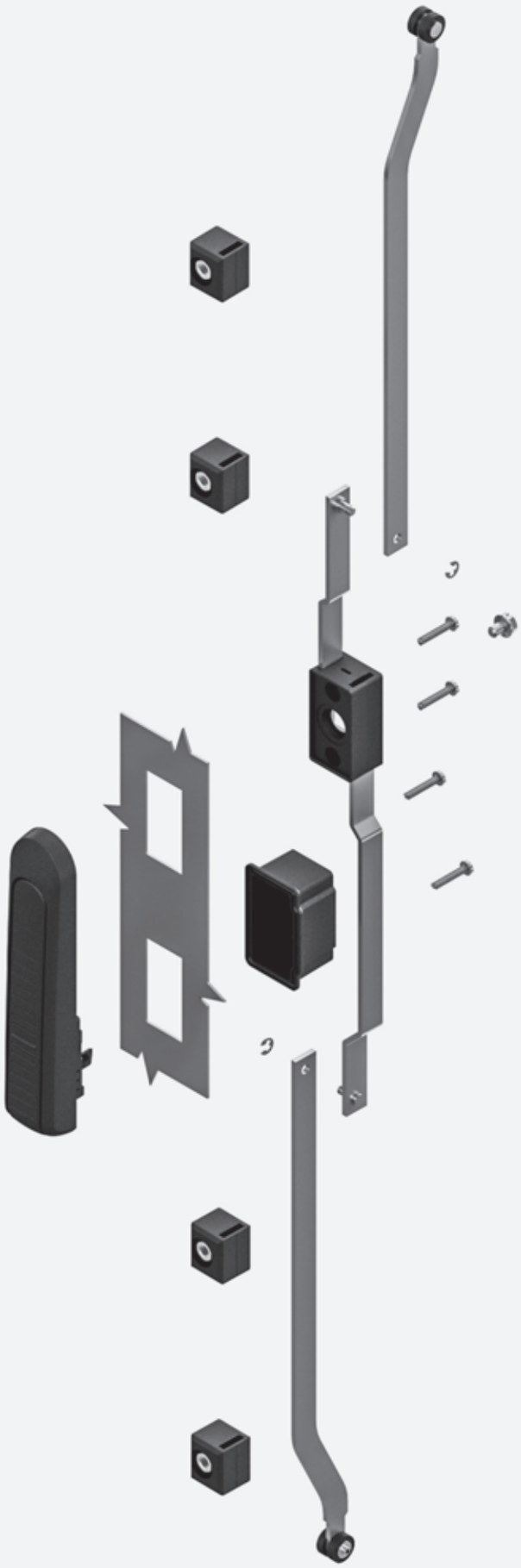

1 Locking systems
2 Locks Latches
3 Hinges
4 Clamps
5 Accessories
6 Gasketing profiles
7 Custom products

Locking systems with space between holes 95/105/130

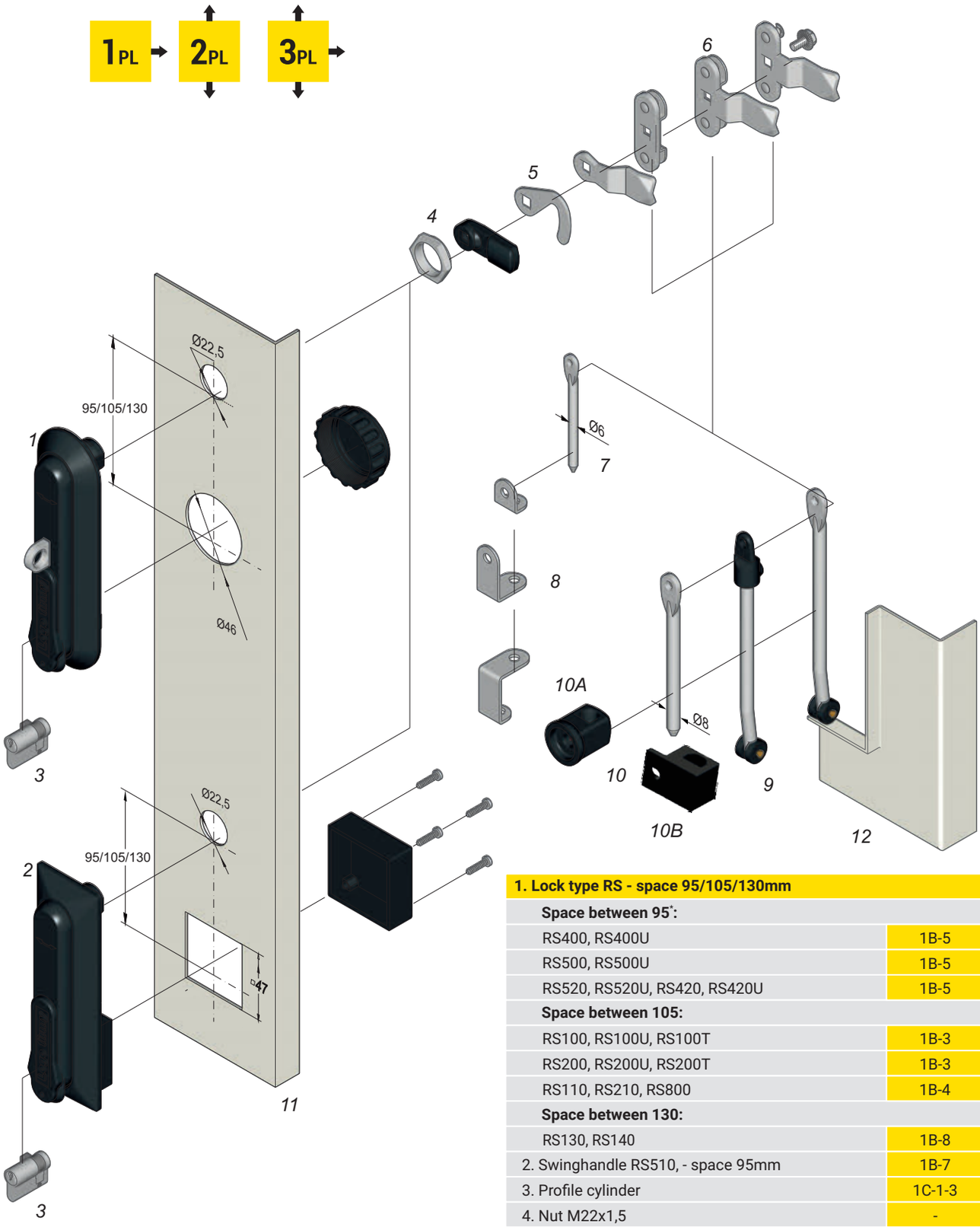

1. Lock type RS - space 95/105/130mm		
Space between 95*:		
RS400, RS400U		1B-5
RS500, RS500U		1B-5
RS520, RS520U, RS420, RS420U		1B-5
Space between 105:		
RS100, RS100U, RS100T		1B-3
RS200, RS200U, RS200T		1B-3
RS110, RS210, RS800		1B-4
Space between 130:		
RS130, RS140		1B-8
2. Swinghandle RS510, - space 95mm		1B-7
3. Profile cylinder		1C-1-3
4. Nut M22x1,5		-
5. 1-point cam without limiter		1C-12-13
6. 2-points, 3-points cam without limiter		1C-15, 19
7. Rod ø6		1C-4
8. Rod guide ø6		1C-6
9. Rod ø8		1C-4-5
10A. Rod guide ø8	10B. Rod guide RW	1C-6-7
11. Door of the box		-
12. Edge of the box		-

Locking system with space between holes 105/130 internal locks

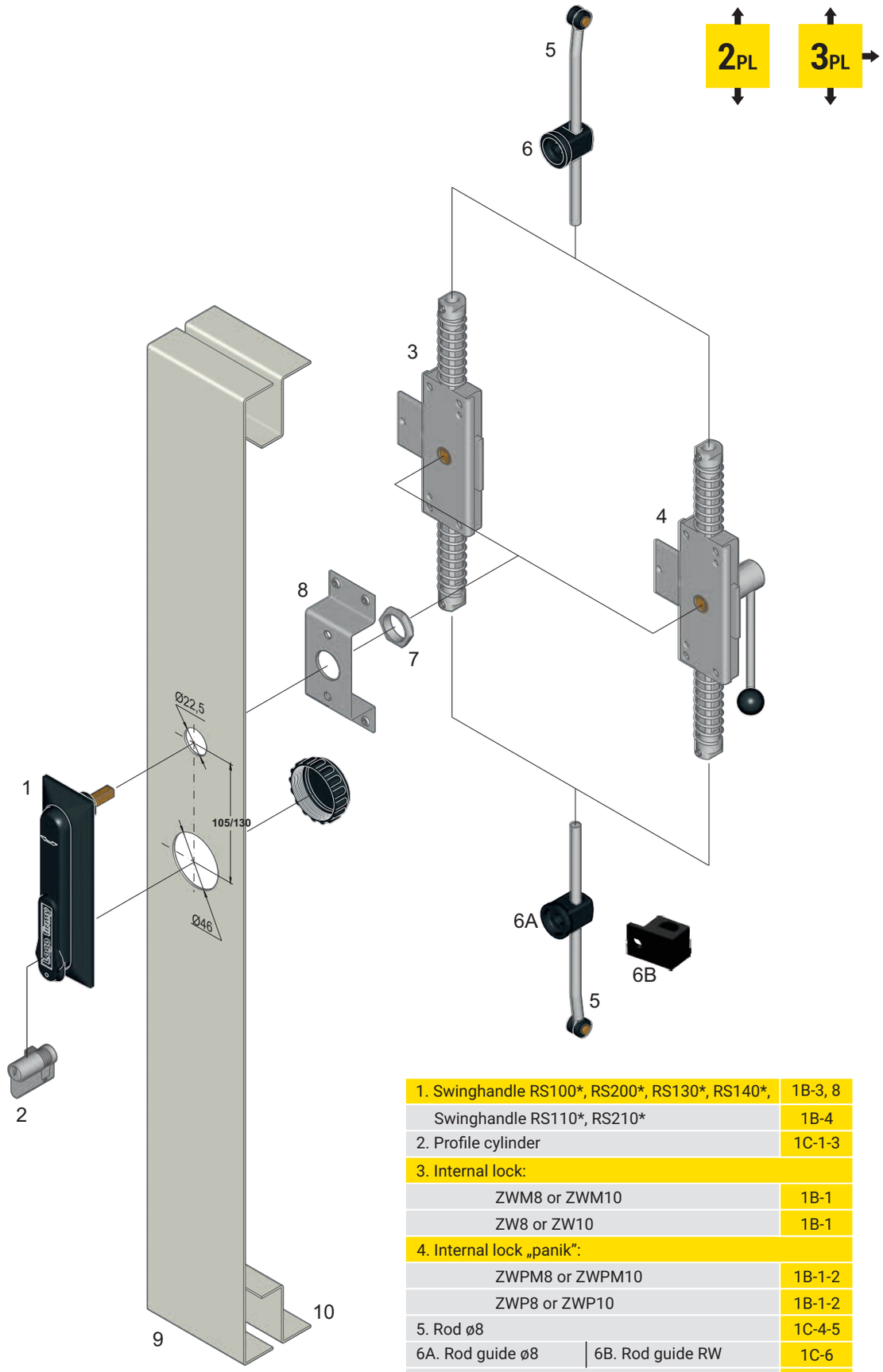

1. Swinghandle RS100*, RS200*, RS130*, RS140*,		1B-3, 8
Swinghandle RS110*, RS210*		1B-4
2. Profile cylinder		1C-1-3
3. Internal lock:		
ZWM8 or ZWM10		1B-1
ZW8 or ZW10		1B-1
4. Internal lock „panik”:		
ZWPM8 or ZWPM10		1B-1-2
ZWP8 or ZWP10		1B-1-2
5. Rod ø8		1C-4-5
6A. Rod guide ø8	6B. Rod guide RW	1C-6
7. Nut M22 x 1,5		-
8. Lock support*		-
9. Door of the box		-
10. Edge of the box		-

***(*) When you order locks** RS100, RS110, RS200, RS210, RS130, RS140 to **Internal lock**, you should add letters ZW e.e (RS100ZW, RS200ZW). **When you order locks** RS100, RS110, RS200, RS210 to **Internal lock panik**, you should add letters ZWP e.g. (RS100ZWP) **Lock support** only on special request.*

Locking system with space between holes 50/55

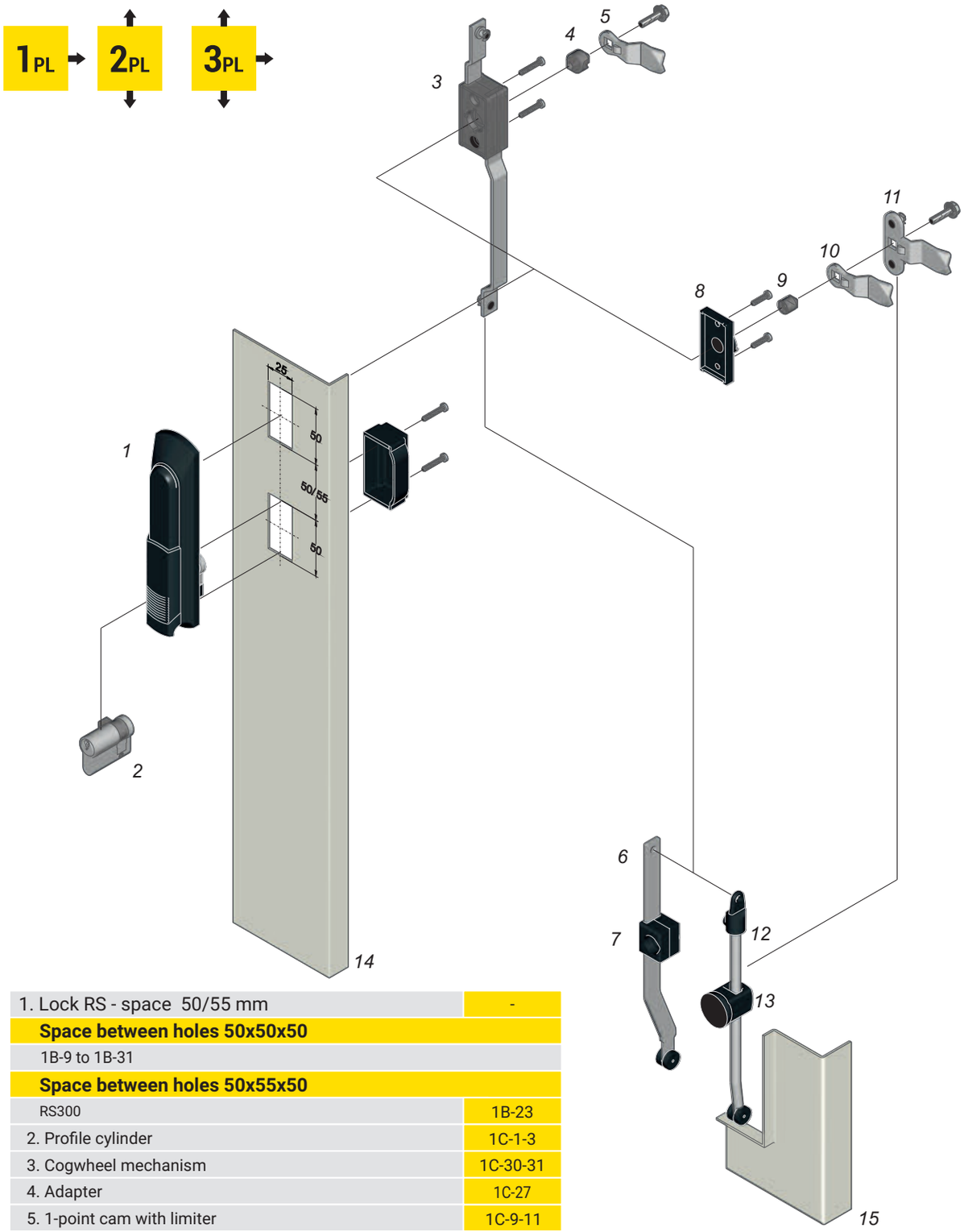

1. Lock RS - space 50/55 mm	-
Space between holes 50x50x50	
1B-9 to 1B-31	
Space between holes 50x55x50	
RS300	1B-23
2. Profile cylinder	1C-1-3
3. Cogwheel mechanism	1C-30-31
4. Adapter	1C-27
5. 1-point cam with limiter	1C-9-11
6. Flat rod with rollers	1C-34
7. Flat rod guide P314	1C-8
8. Cap	1C-27
9. Bushing	1C-27
10. 1-point cam with limiter for cap	1C-10-11
11. 3-point cam with limiter for cap	1C-16-18
12. Rod ø8, rod holder	1C-5
13. Rod guide ø8	1C-6-7
14. Door of the box	-
15. Edge of the box	-

Locking system with space between holes 50/55

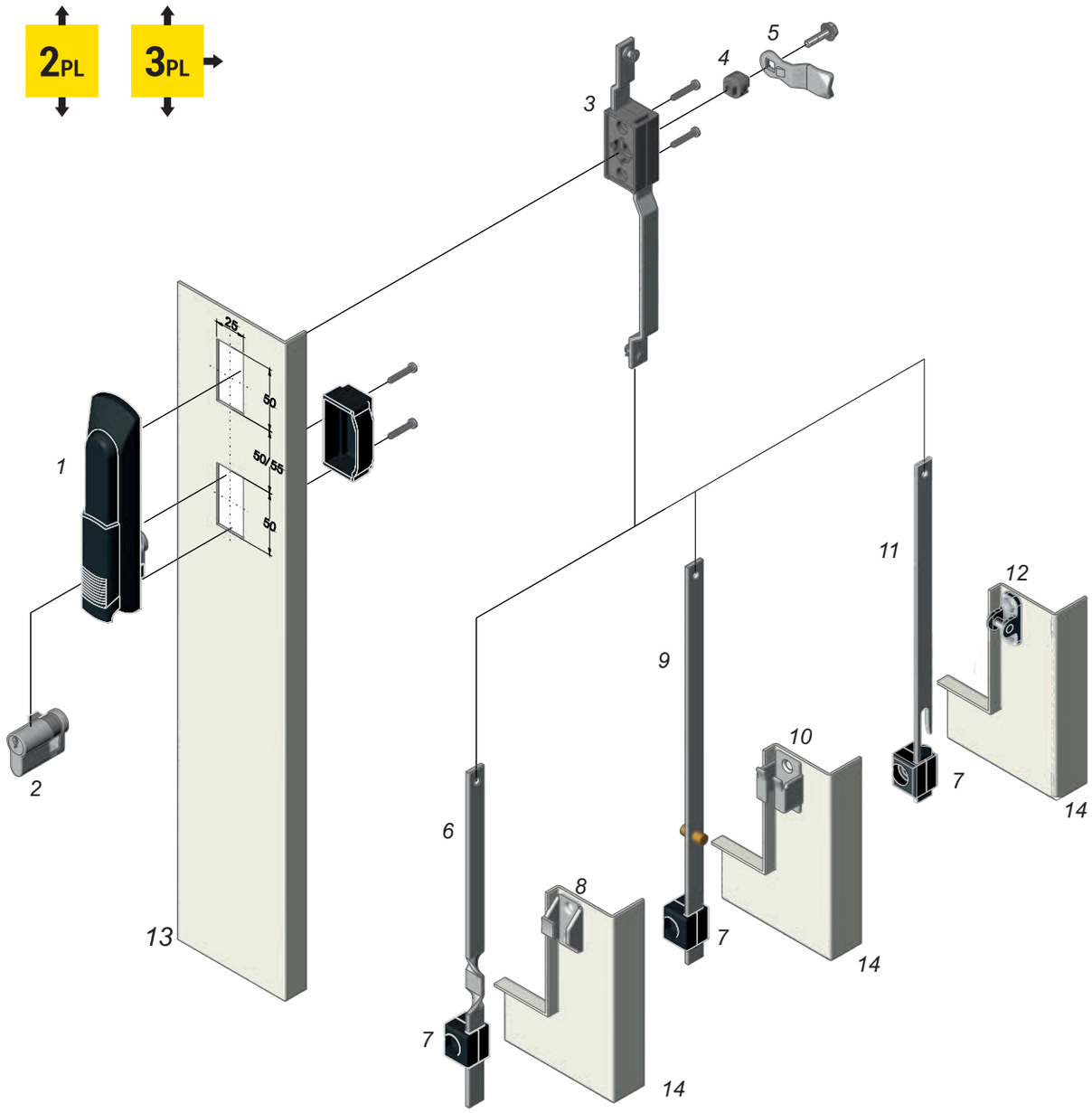

1. Swinghandle RS - space 50/55 mm	-
Space between holes 50x50x50	
1B-9 To 1B-31	
Space between holes 50x55x50	
RS300	1B-23
2. Profile cylinder	1C-3
3. Cogwheel mechanism	1C-30-31
4. Adapter	1C-27
5. 1-point cam with limiter	1C-9-11
6. Flat rod ver. "A", "B", "C"	1C-36
7. Flat rod guide P314	1C-8
8. Catch W314-90	1C-36
9. Flat rod ver. "B"	1C-37
10. Catch W314-80	1C-38
11. Flat rod ver. "C"	1C-39
12. Catch W314-70	1C-39
13. Door of the box	-
14. Edge of the box	-

Locking system with holes 50 x 25

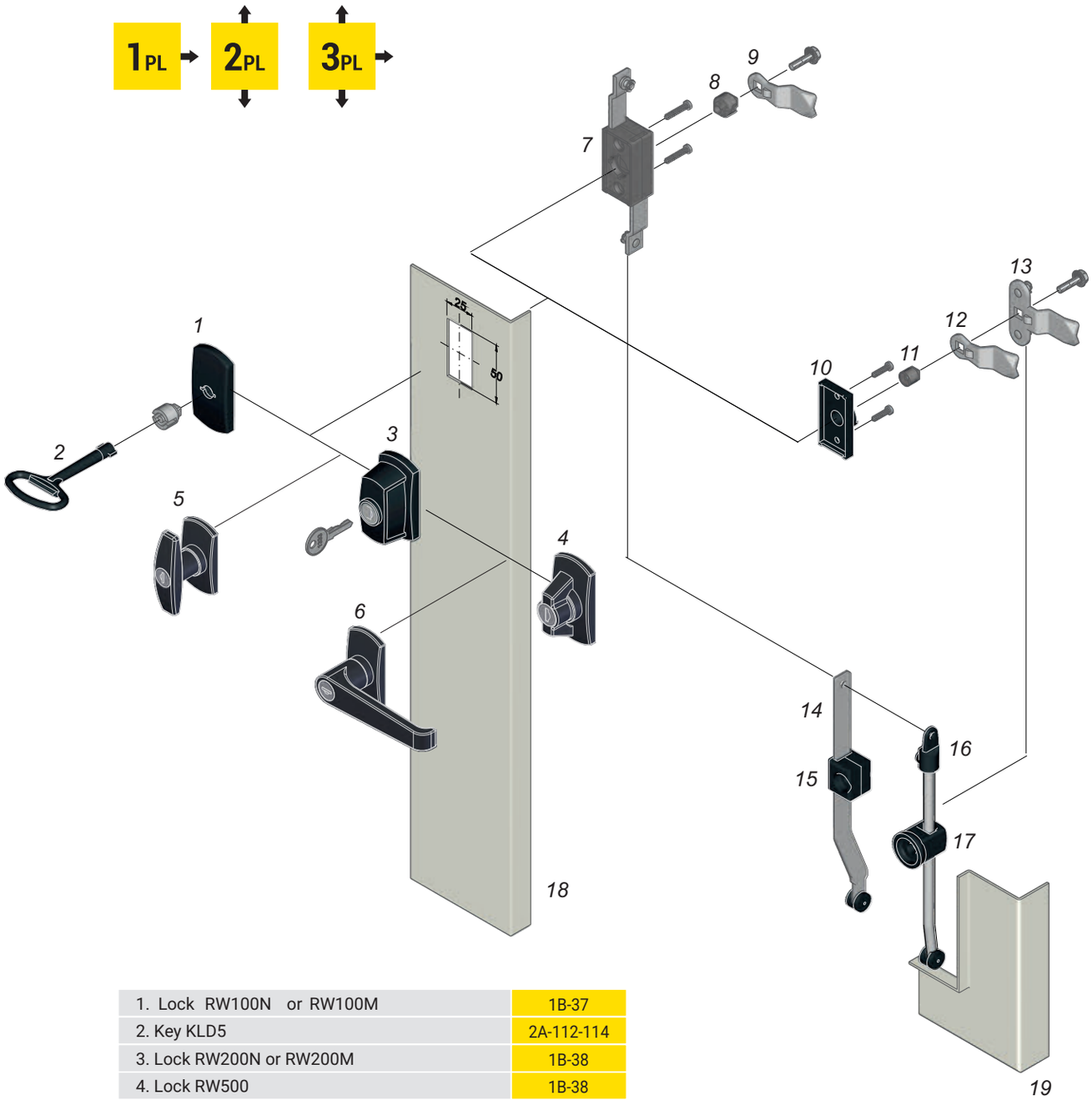

1. Lock RW100N or RW100M	1B-37
2. Key KLD5	2A-112-114
3. Lock RW200N or RW200M	1B-38
4. Lock RW500	1B-38
5. T-handle lock	1B-40
6. L-handle lock	1B-40
7. Cogwheel mechanism	1C-28
8. Adapter	1C-27
9. 1-point cam with limiter	1C-9-11
10. Cap	1C-27
11. Bushing	1C-27
12. 1-point cam with limiter for cap	1C-10-11
13. 3-point cam with limiter for cap	1C-17-18
14. Flat rod with rollers	1C-34
15. Flat rod guide P314	1C-8
16. Rod ø8, rod holder	1C-5
17. Rod guide ø8	1C-6-7
18. Door of the box	-
19. Edge of the box	

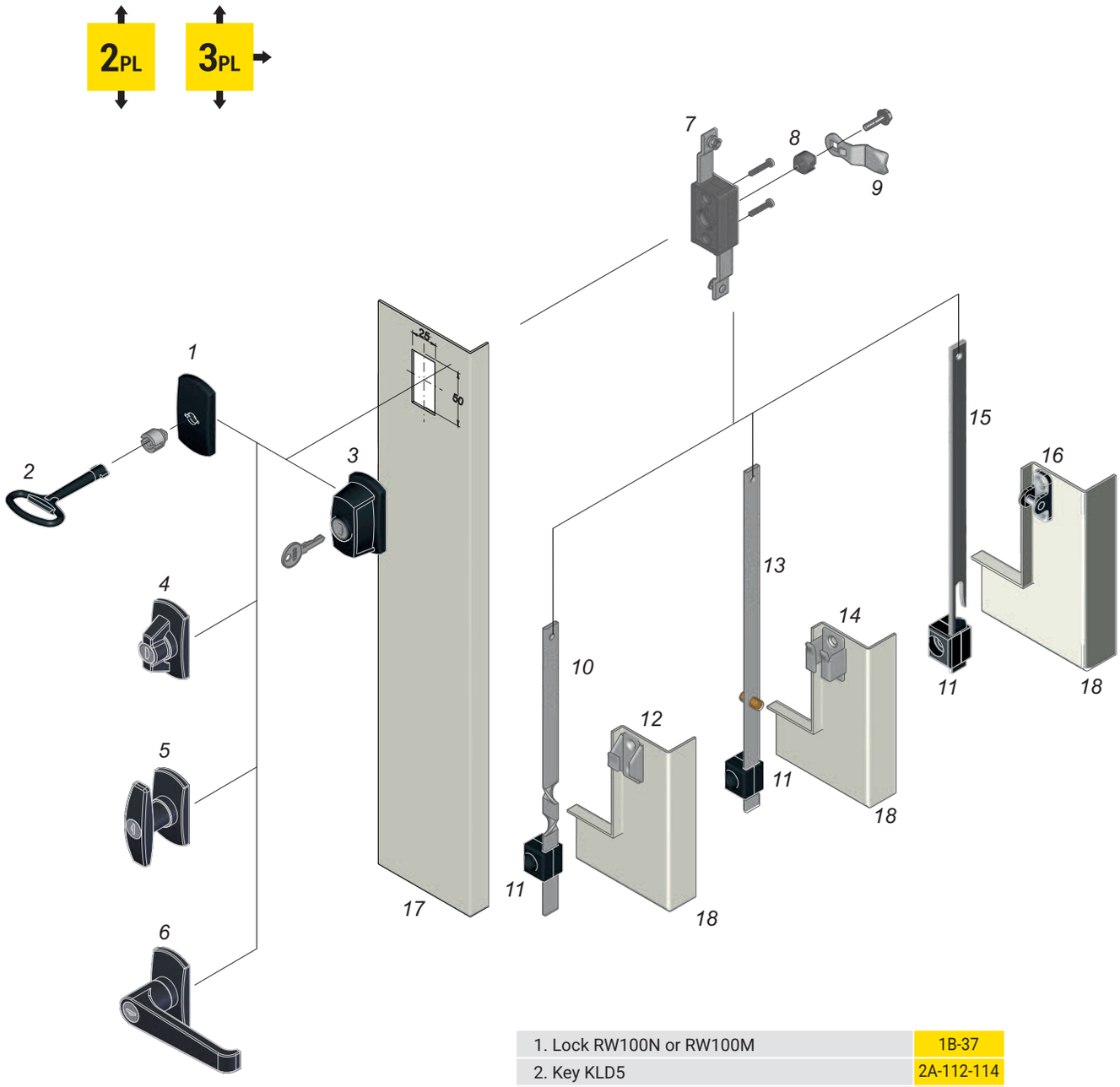

1. Lock RW100N or RW100M	1B-37
2. Key KLD5	2A-112-114
3. Lock RW200N or RW200M	1B-38
4. Lock RW500	1B-38
5. T-handle locking	1B-40
6. L-handle locking	1B-40
7. Cogwheel mechanism	1C-28
8. Adapter	1C-27
9. 1-point cam with limiter	1C-9-11
10. Flat rod ver. ”A”	1C-36
11. Flat rod guide P314	1C-8
12. Catch W314-90	1C-36
13. Flat rod ver. ”B”	1C-37
14. Catch W314-80	1C-38
15. Flat rod ver. ”C”	1C-39
16. Catch W314-70	1C-39
17. Door of the box	-
18. Edge of the box	-

Locking system for aluminium profile door

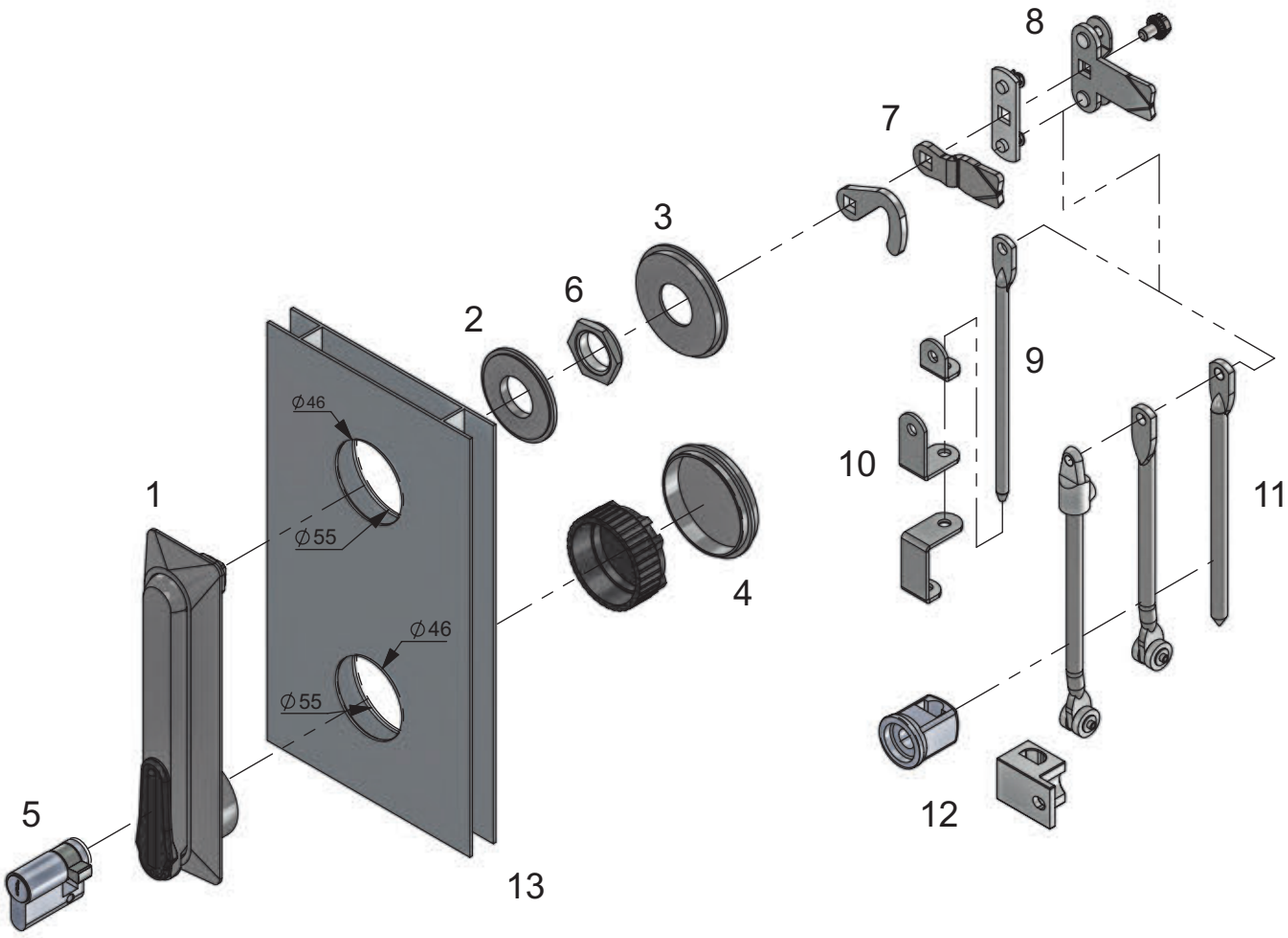

1. Swinghandle RS130, RS140	1B-8
2. Adapter 1C.916.001	1C-43
3. Adapter 1C.916.002	1C-43
4. Adapter 1C.916.003	1C-43
5. Profile	1C-1-3
6. Nut M22x1,5	-
7. Cam 1-point no limiter	1C-12-13
8. Cam 2-point, 3-point no limiter	1C-15-19
9. Rod 6	1C-4
10. Rod guide 6	1C-6
11. Rod 8 1C-3,4	1C-5
12. Rod guide 8 / Rod guide RW	1C-6-7
13. Cabinet door	-

2PL

BOLT MECHANISM

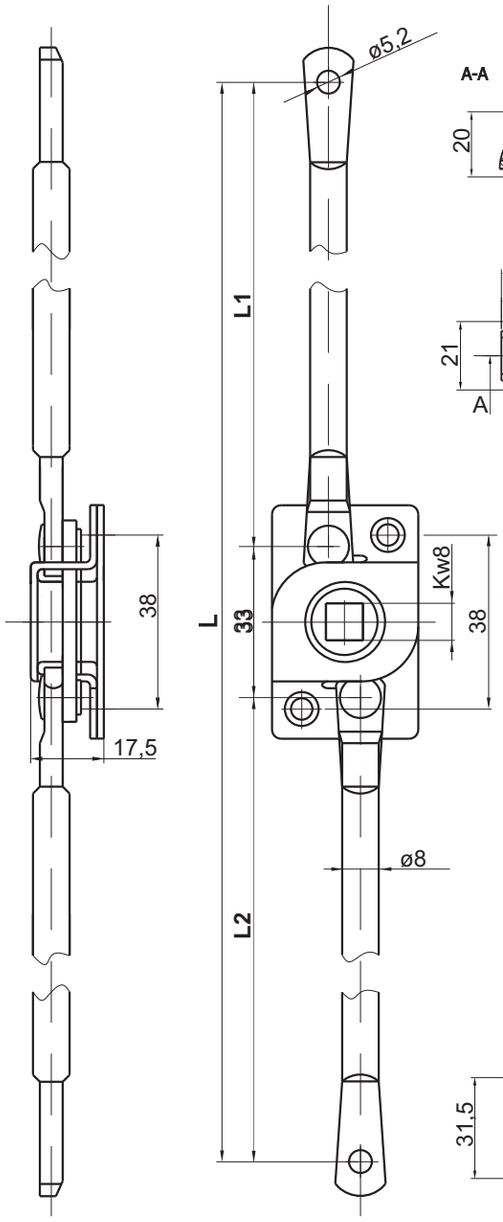

BOLT

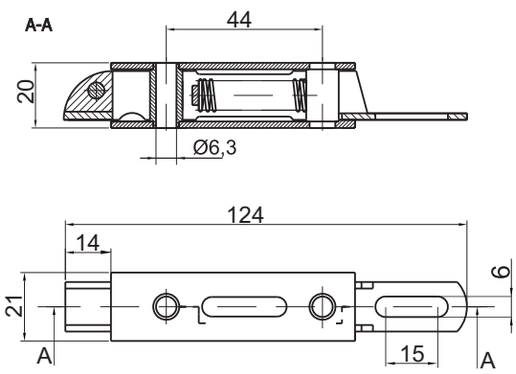

Bolt holder
(left, right)

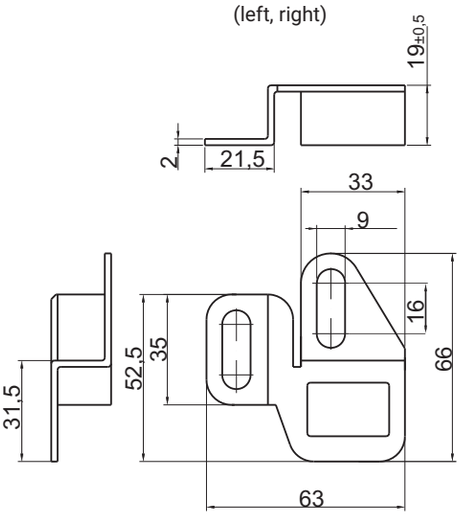

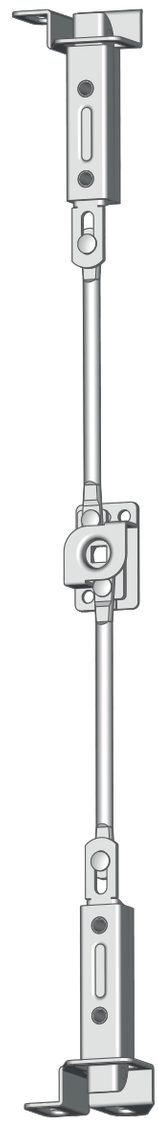

$L = 33 + L_1 + L_2$

CAT. NUMBER	NAME	MATERIAL
1A.001.001	Bolt mechanism	Steel zinc plated
1A.001.001SN	Bolt mechanism	Stainless steel
1A.002.001	Bolt	Steel zinc plated
1A.002.001SN	Bolt	Stainless steel
1A.003.001	Bolt holder right	Stainless steel
1A.003.002	Bolt holder left	Stainless steel

Rod strenghtening system, cogwheel mechanism distance

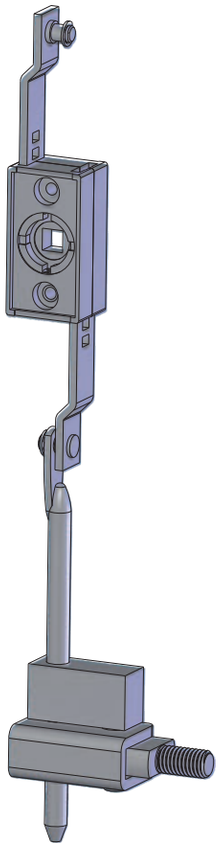

ROD STRENGHTENING SYSTEM

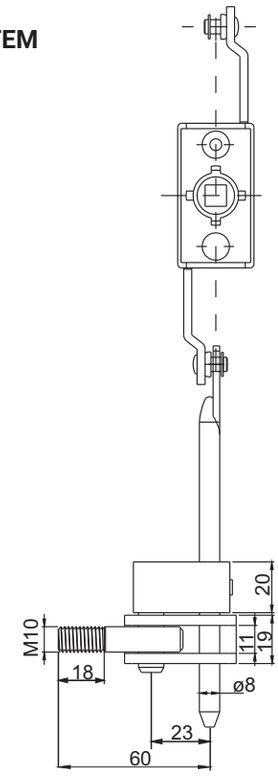

COGWHEEL MECHANISM DISTANCE

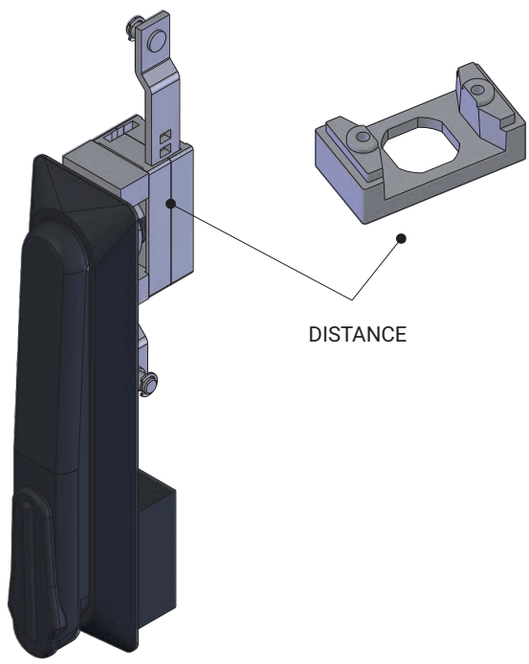

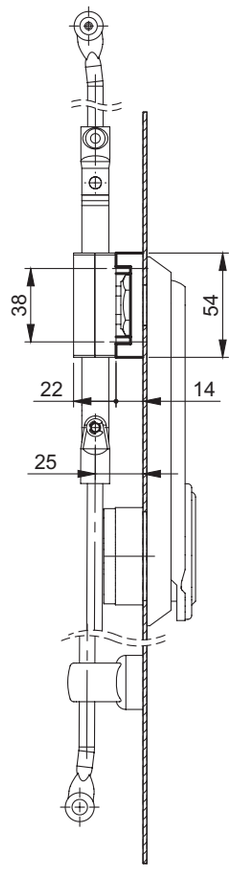

CAT. |NUMBER	NAME	MATERIAL
1C.911.001	Rod strenghtening system	Steel zinc plated
1C.910.001	Cogwheel mechanism distance	ZAMAK
*** system cooperates with cogwheel mechanism MZ** (pg 1C-28, 1C-30, 1C-32, 1C-33)		

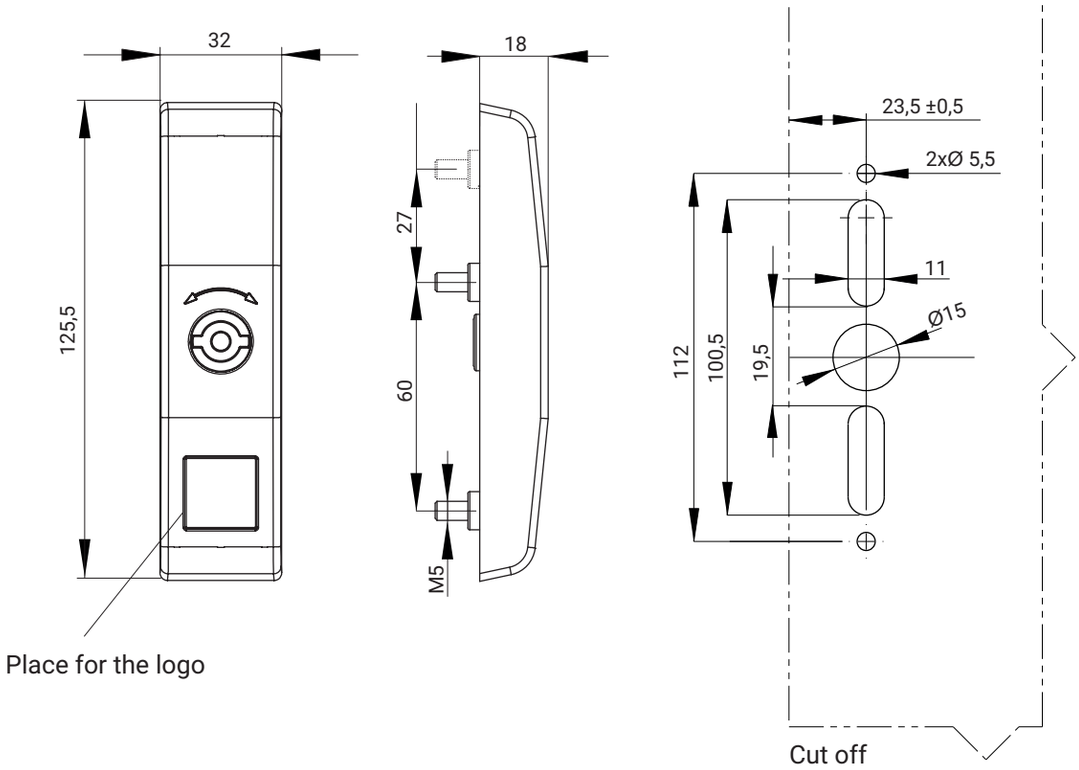

LOCK TYPE	COMPONENTS	MATERIAL	FINISH [C]	
RW 250	Housing	ABS	RAL 9005	RAL 7035
	Flat rods	Steel	04	05

Inserts				
D3	D5	T9	KW 8	S

How to order :

RW 250	D5	—	2000	C
Type of lock	Type of insert		Height cabinet	Finish

NOTE:
1. Lock RW 250 suitable to use outside the sealing zone
2. Locking system for door about max. thickness 2 mm
3. Type of locking system: left or right.
4. System components sold together or separately

Locking system outside the IP RW250

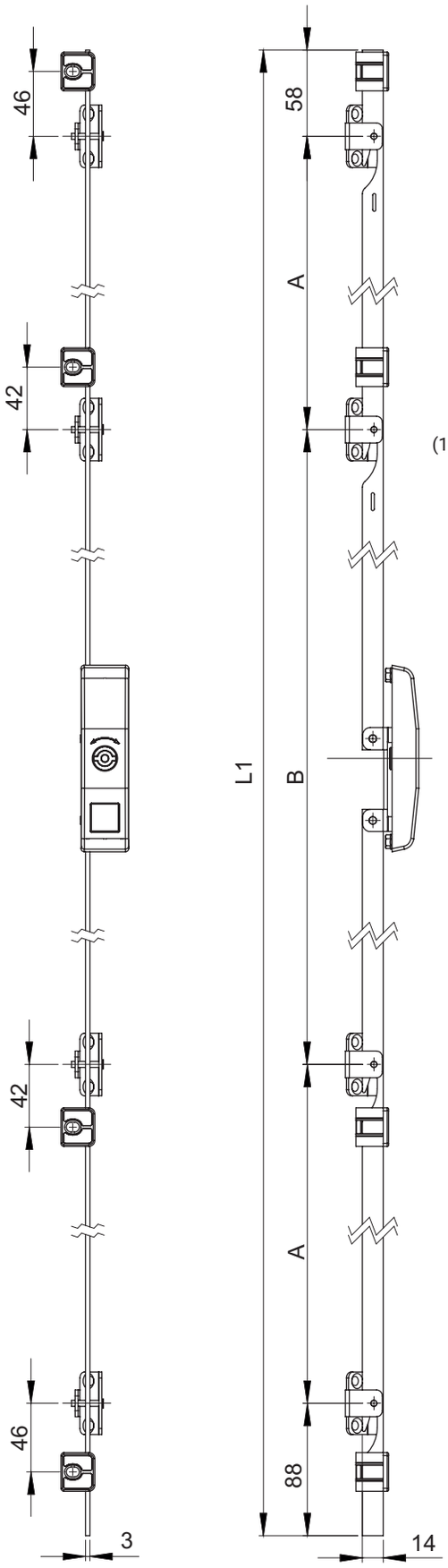

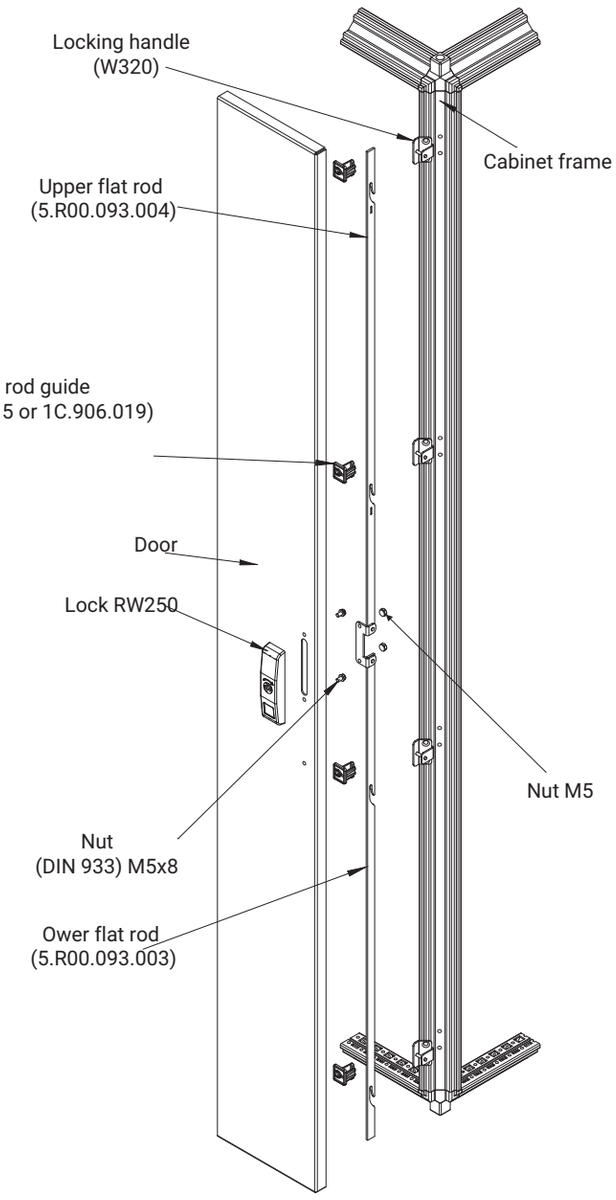

HEIGHT OF THE BOX[L]	L1	A	B
1800	1729	520	520
2000	1929	586	586

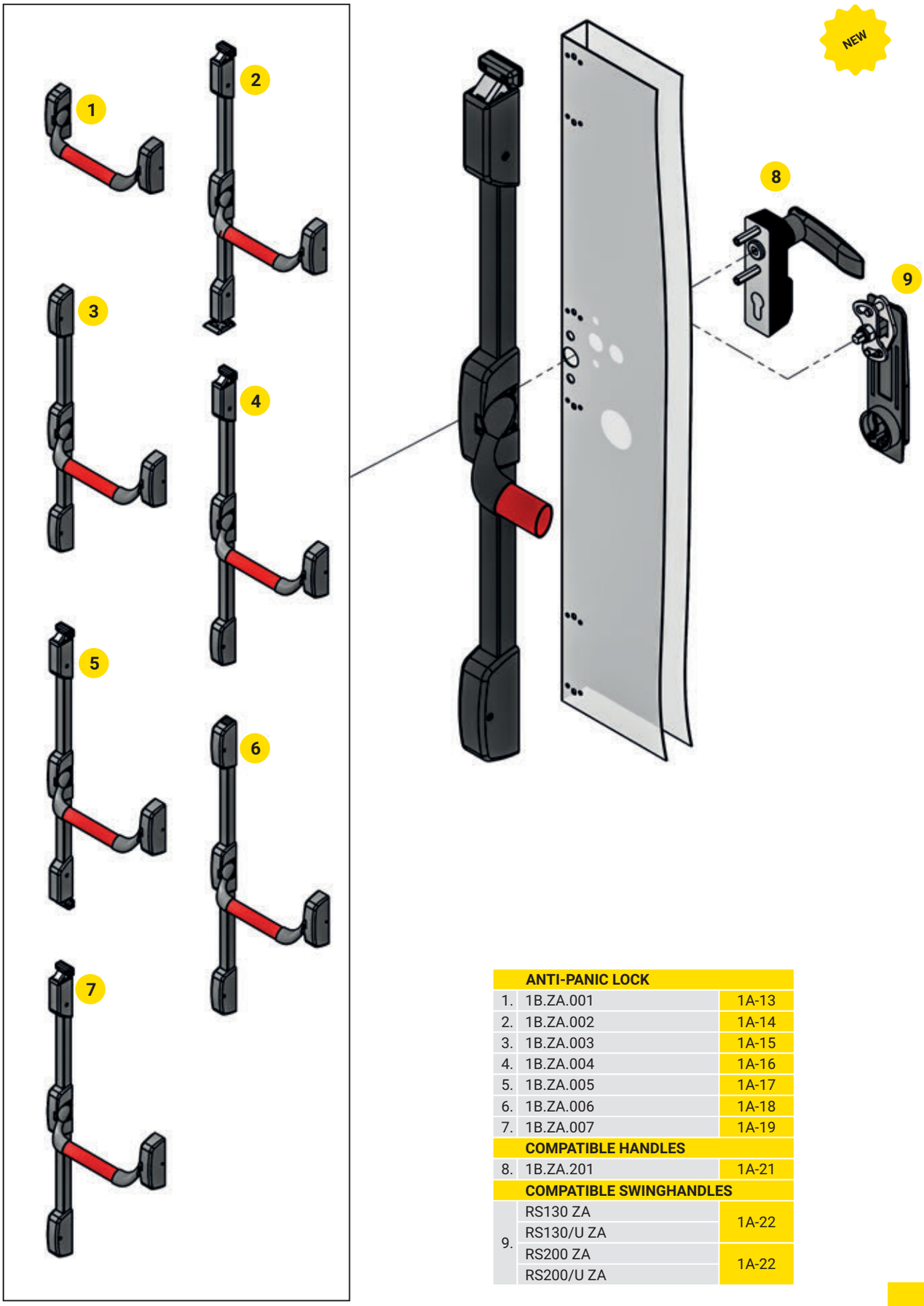

	ANTI-PANIC LOCK	
1.	1B.ZA.001	1A-13
2.	1B.ZA.002	1A-14
3.	1B.ZA.003	1A-15
4.	1B.ZA.004	1A-16
5.	1B.ZA.005	1A-17
6.	1B.ZA.006	1A-18
7.	1B.ZA.007	1A-19
	COMPATIBLE HANDLES	
8.	1B.ZA.201	1A-21
	COMPATIBLE SWINGHANDLES	
9.	RS130 ZA	1A-22
	RS130/U ZA	
	RS200 ZA	1A-22
	RS200/U ZA	

Anti-panic lock 1B.ZA.001

NEW

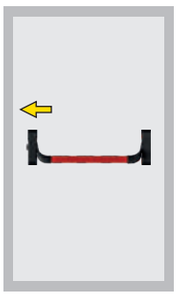

Anti-panic lock
SINGLE-POINT HORIZONTAL LATCH

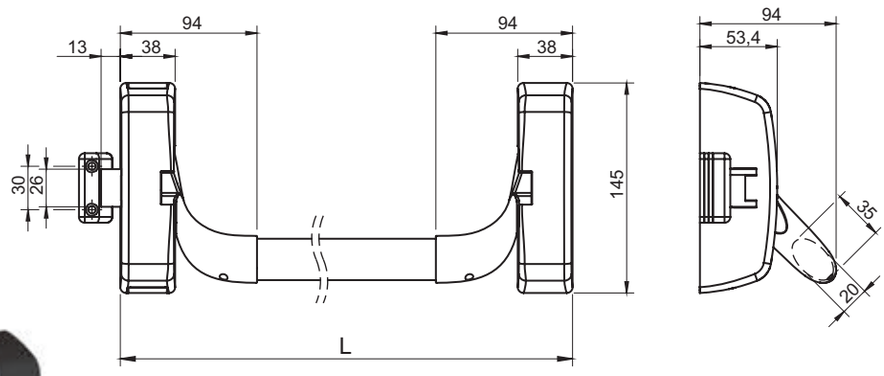

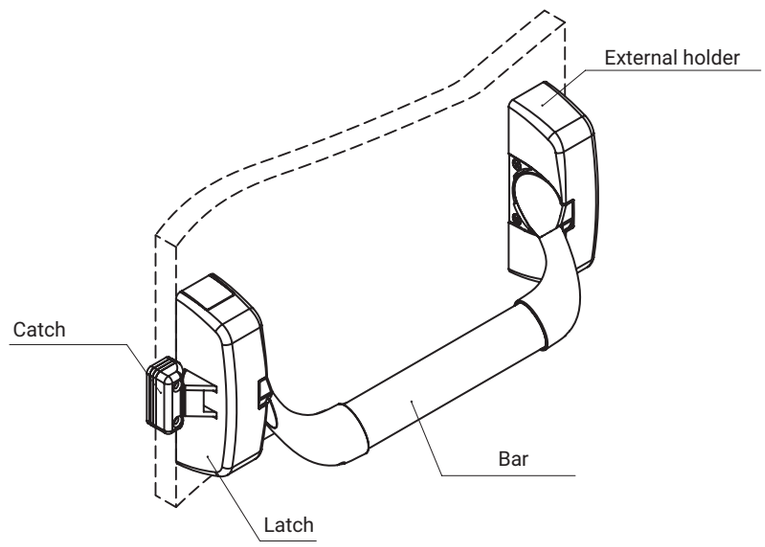

The set includes::
- horizontal latch
- external holder,
- horizontal bar (state size L at order)
- catch with a set of spacers

Accessories to be ordered separately:
- external holder 1B.ZA.100,

Housings of lock and external holder, horizontal bar are made of ZAMAK
internal lock mechanism - galvanized steel ; bar, catch - powder-coated steel

CATALOGUE NUMBER	COMPONENTS	FINISH [C]		
		RAL 9005	RAL 7035	RAL 3020
1B.ZA.001	Horizontal latch	04	05	-
	External holder			
	Catch			
	Horizontal bar	04	05	12

How to order:

1B.ZA.001 — C — L. C

Catalogue number

Finish for a horizontal latch, external holder and a catch

Closure width

Finish for a horizontal bar

Anti-panic lock
DOUBLE-POINT VERTICAL LATCH (top / bottom)

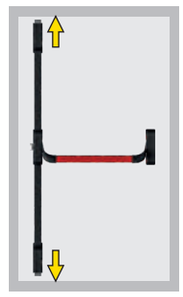

NEW

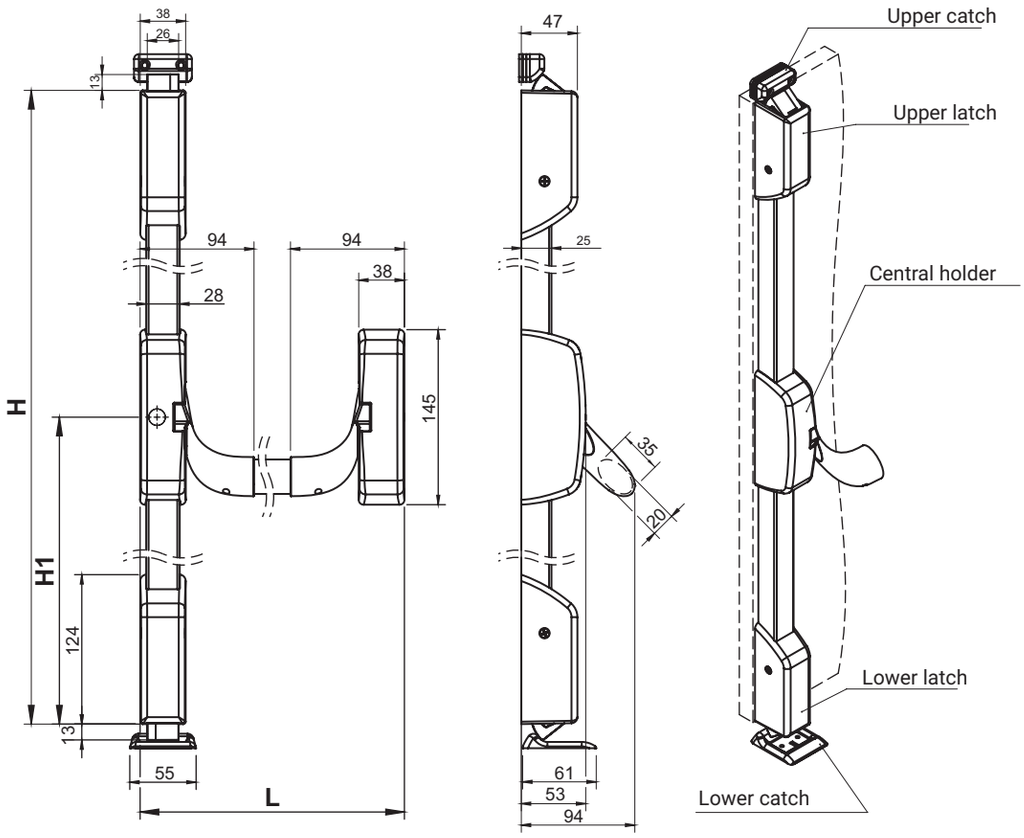

The set includes::
- central holder,
- vertical upper latch,
- vertical lower latch,
- horizontal bar (state size L at order),
- upper and lower rod (state dimension of H and H1 at order),
- upper catch with a set of spacers,
- lower catch,

Accessories to be ordered separately:
- external holder 1B.ZA.100,

Housings of locks and catches, horizontal bar are made of ZAMAK;
internal lock mechanism, rod - galvanized steel; bar, catch - powder-coated steel

CATALOGUE NUMBER	COMPONENTS	FINISH [C]		
		RAL 9005	RAL 7035	RAL 3020
1B.ZA.002	Central holder	04	05	-
	Vertical latch			
	Catch			
	Horizontal bar	04	05	12

How to order: 1B.ZA.002 — C — L. C — H — H1

- Catalogue number
- Finish for a central holder, latches and a catches
- Closure width
- Finish for a horizontal bar
- Closure height
- Height from the closure axis to the bottom latch

Anti-panic lock 1B.ZA.003

ROZTOCZE

NEW

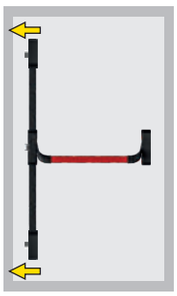

Anti-panic lock
DOUBLE-POINT VERTICAL LATCH (top / bottom)

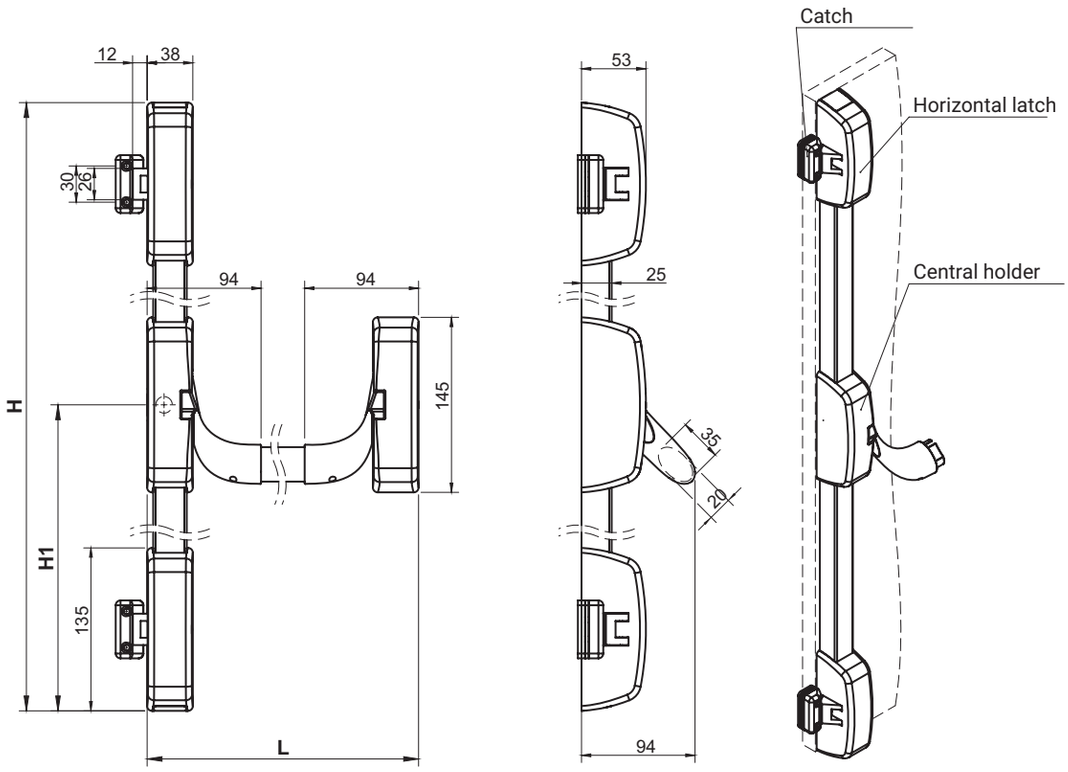

The set includes:
- central holder,
- horizontal latch (x2),
- horizontal bar (state size L at order),
- upper and lower rod (state dimension of H and H1 at order),
- upper catch with a set of spacers (x2),

Accessories to be ordered separately:
- external holder 1B.ZA.100

Housings of locks and catches, horizontal bar are made of ZAMAK;
internal lock mechanism, rod - galvanized steel; bar, catch - powder-coated steel

CATALOGUE NUMBER	COMPONENTS	FINISH [C]		
		RAL 9005	RAL 7035	RAL 3020
1B.ZA.003	Central holder	04	05	-
	Vertical latch			
	Catch			
	Horizontal bar	04	05	12

How to order: 1B.ZA.003 — C — L. C — H — H1

- Catalogue number
- Finish for a central holder, latches and a catches
- Closure width
- Finish for a horizontal bar
- Closure height
- Height from the closure axis to the bottom latch

Anti-panic lock
DOUBLE-POINT VERTICAL AND HORIZONTAL LATCH (top / side)

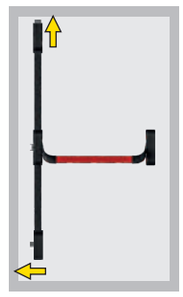

NEW

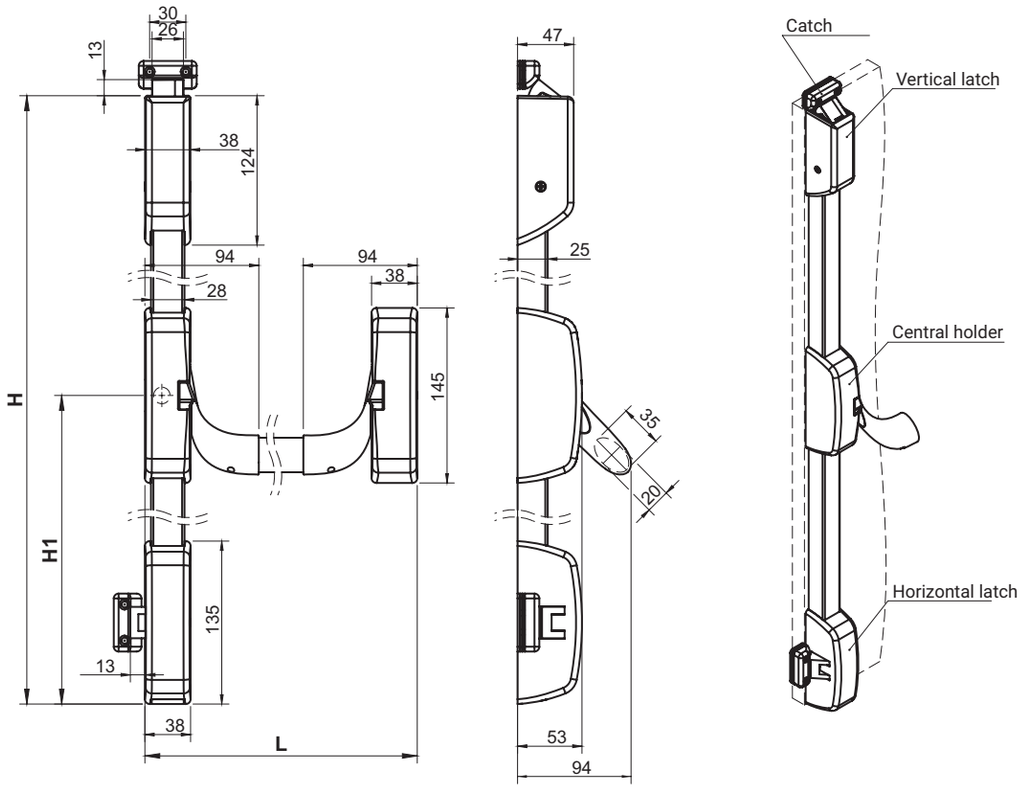

The set includes:
- central holder,
- vertical latch,
- horizontal latch,
- horizontal bar (state size L at order),
- upper and lower rod (state dimension of H and H1 at order),
- catch with a set of spacers (x2)

Accessories to be ordered separately:
- external holder 1B.ZA.100

Housings of locks and catches, horizontal bar are made of ZAMAK;
internal lock mechanism, rod - galvanized steel; bar, catch - powder-coated steel

CATALOGUE NUMBER	COMPONENTS	FINISH [C]		
		RAL 9005	RAL 7035	RAL 3020
1B.ZA.004	Central holder	04	05	-
	Latch			
	Catch			
	Horizontal bar	04	05	12

How to order: 1B.ZA.004 — C — L. C — H — H1

- Catalogue number
- Finish for a central holder, latches and a catches
- Closure width
- Finish for a horizontal bar
- Closure height
- Height from the closure axis to the bottom latch

Anti-panic lock 1B.ZA.005

ROZTOCZE

NEW

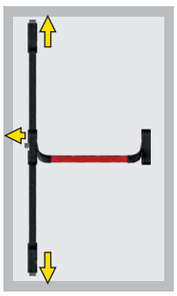

Anti-panic lock
THREE-POINT LATCH (side / top / bottom)

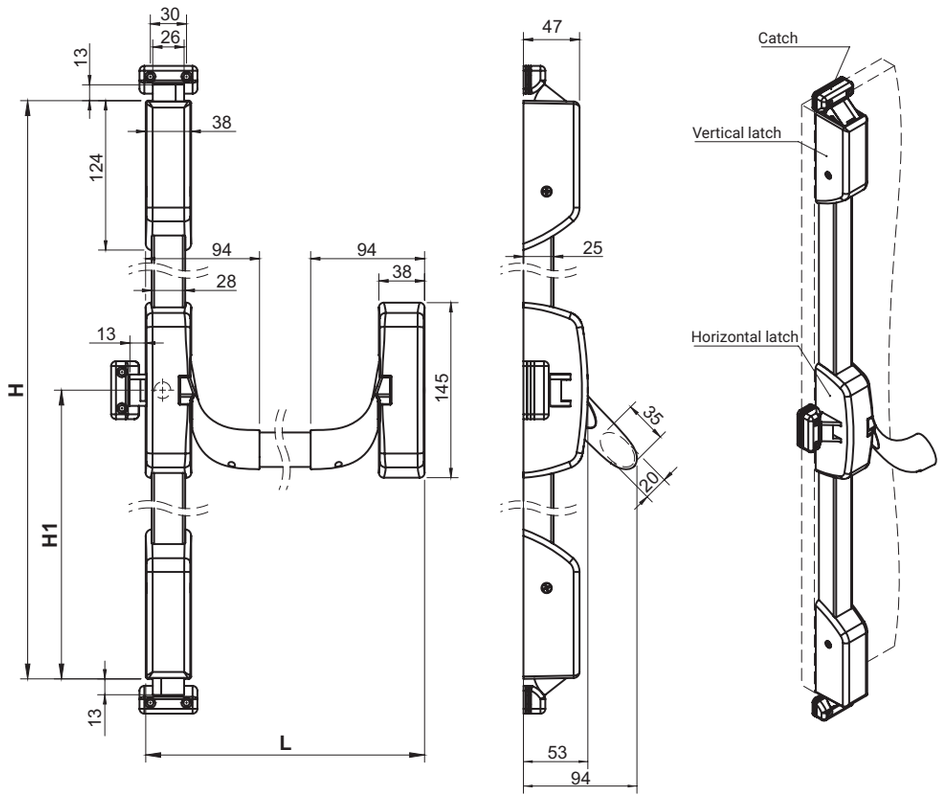

The set includes:
- central holder,
- vertical latch (x2),
- horizontal latch,
- horizontal bar (state size L at order),
- upper and lower rod (state dimension of H and H1 at order),
- catch with a set of spacers (x3)

Accessories to be ordered separately:
- external holder 1B.ZA.100

Housings of locks and catches, horizontal bar are made of ZAMAK;
internal lock mechanism, rod - galvanized steel; bar, catch - powder-coated steel

CATALOGUE NUMBER	COMPONENTS	FINISH [C]		
		RAL 9005	RAL 7035	RAL 3020
1B.ZA.005	Central holder	04	05	-
	Latch			
	Catch			
	Horizontal bar	04	05	12

How to order: 1B.ZA.005 — C — L. C — H — H1

- Catalogue number
- Finish for a central holder, latches and a catches
- Closure width
- Finish for a horizontal bar
- Closure height
- Height from the closure axis to the bottom latch

Anti-panic lock
THREE-POINT LATCH (side / side / side)

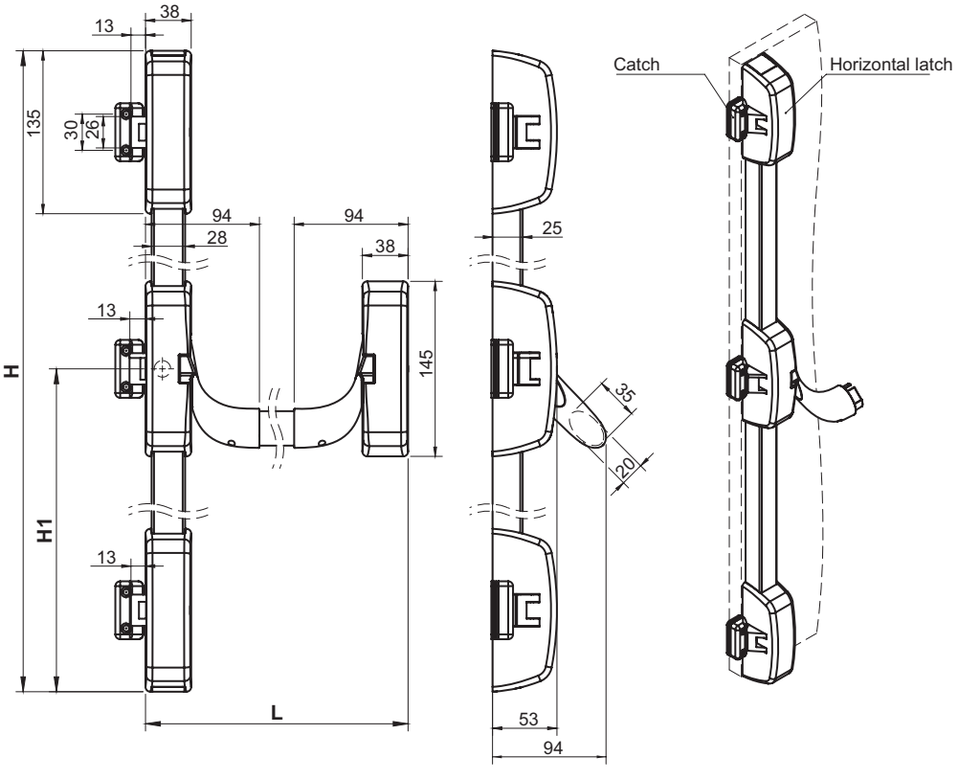

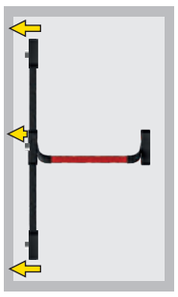

NEW

The set includes:
- central holder,
- horizontal latch (x3),
- horizontal bar (state size L at order),
- upper and lower rod (state dimension of H and H1 at order),
- catch with a set of spacers (x3)

Accessories to be ordered separately:
- external holder 1B.ZA.100

Housings of locks and catches, horizontal bar are made of ZAMAK;
internal lock mechanism, rod - galvanized steel; bar, catch - powder-coated steel

CATALOGUE NUMBER	COMPONENTS	FINISH [C]		
		RAL 9005	RAL 7035	RAL 3020
1B.ZA.006	Central holder	04	05	-
	Latch			
	Catch			
	Horizontal bar	04	05	12

How to order: 1B.ZA.006 — C — L. C — H — H1

- Catalogue number
- Finish for a central holder, latches and a catches
- Closure width
- Finish for a horizontal bar
- Closure height
- Height from the closure axis to the bottom latch

Anti-panic lock 1B.ZA.007

NEW

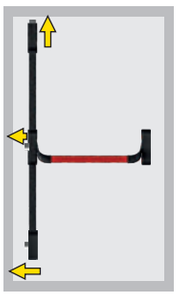

Anti-panic lock
THREE-POINT LATCH (side / top / side)

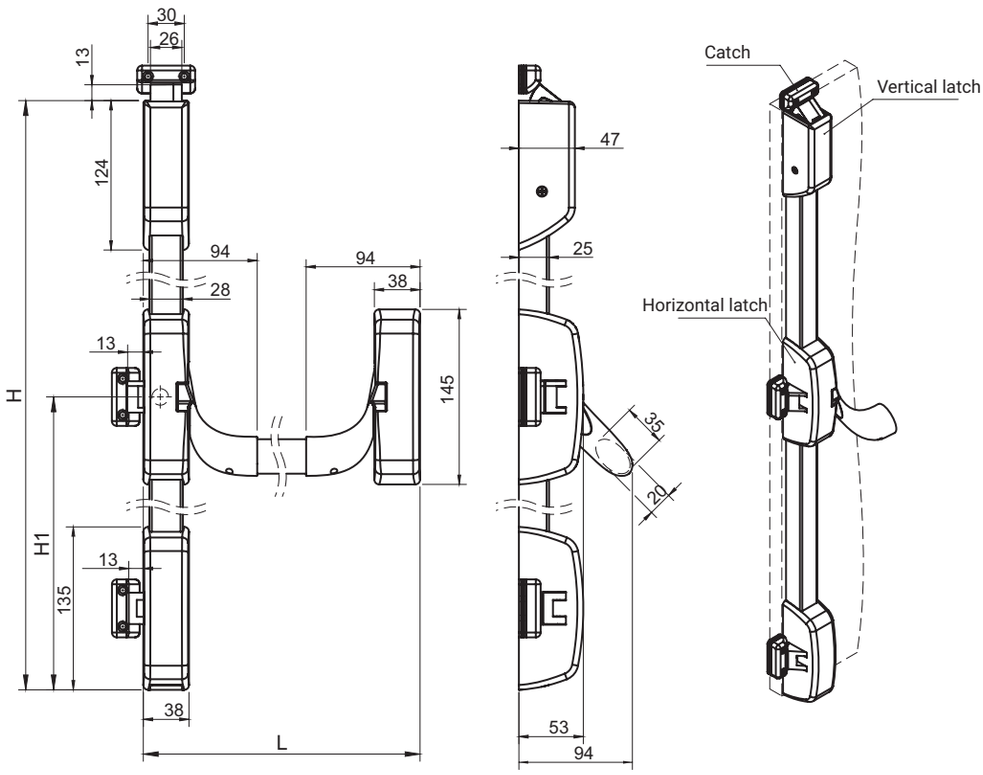

The set includes:
- central holder,
- horizontal latch (x2),
- vertical latch
- horizontal bar (state size L at order),
- upper and lower rod (state dimension of H and H1 at order),
- catch with a set of spacers (x3)

Accessories to be ordered separately:
- external holder 1B.ZA.100

Housings of locks and catches, horizontal bar are made of ZAMAK;

CATALOGUE NUMBER	COMPONENTS	FINISH [C]		
		RAL 9005	RAL 7035	RAL 3020
1B.ZA.007	Central holder	04	05	-
	Latch			
	Catch			
	Horizontal bar	04	05	12

How to order: 1B.ZA.007 — C — L. C — H — H1

- Catalogue number
- Finish for a central holder, latches and a catches
- Closure width
- Finish for a horizontal bar
- Closure height
- Height from the closure axis to the bottom latch

NEW

		1B.ZW.101	1B.ZW.102	1B.ZW.103	1B.ZW.104
		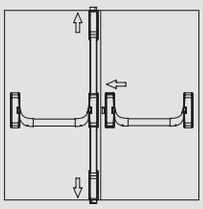	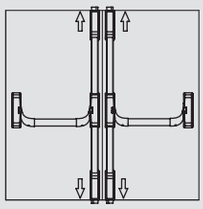	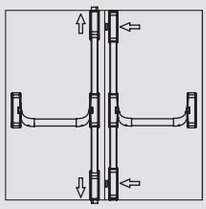	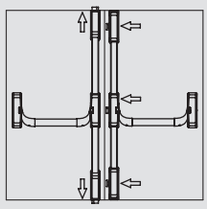
1B.ZA.001 str. 1A-13	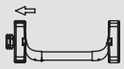	A1			
1B.ZA.002 str. 1A-14	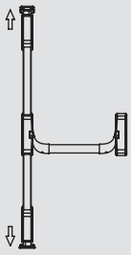	A2	A1 A2	A1	A1
1B.ZA.003 str. 1A-15	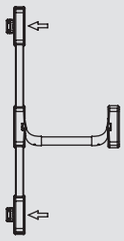			A2	
1B.ZA.006 str. 1A-18	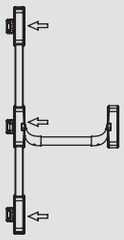				A2

How to order :

Cat.number for anti-panic lock for double wing door

Cat.number for anti-panic lock for first wing door

Cat.number for anti-panic lock for second wing door

1B.ZA.10X — A1 — A2

where:
A1, A2 has a full number from the catalogue of chosen lock
(for locks 1B.ZA.001 without H and H1 dimensions)

External fitting with handle for anti-panic locks

ROZTOCZE

NEW

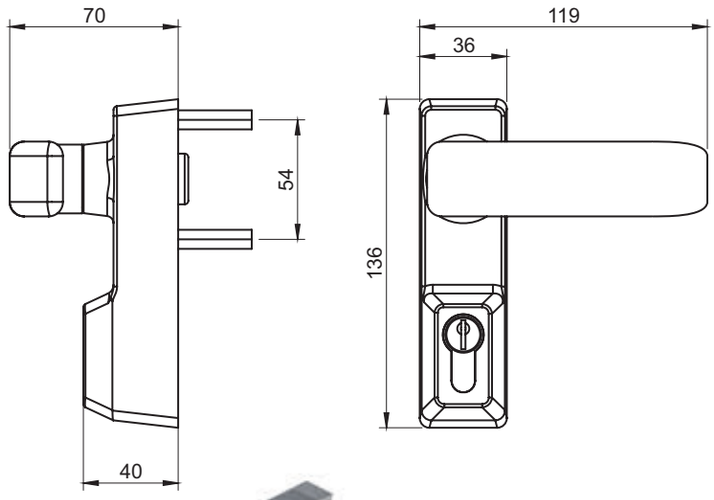

External fitting with handle for anti-panic locks. Provided with Europrofile insert.

CATALOGUE NUMBER	COMPONENTS	MATERIAL	FINISH [C]
			RAL 9005
1B.ZA.201	Klamka	ZAMAK	04
	Obudowa		

How to order : 1B.ZA.201 — C

Catalogue number

Finish

External fitting with handle for anti-panic locks

NEW

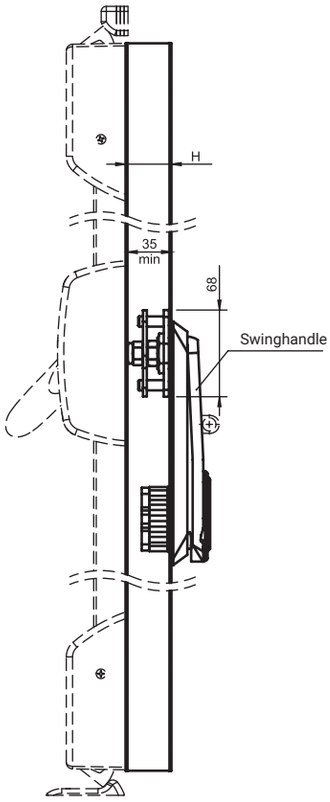

Mounting holes of locks with swinghandle according to catalogue pages of RS200 locks - page 1B-3, RS130 - page 1B-8.
The ZA end piece in the catalogue number of swinghandles means that it is a lock adapted to cooperation with an anti-panic lock.
RS130/U ZA i RS200/U ZA - swinghandles with padlock protection.

SWINGHANDLES COMPATIBLE WITH ANTI-PANIC LOCKS				
TYPE OF LOCK	HANDLE MATERIAL, LOCK FINISH [C]			
	ZAMAK		Polyamide	
	RAL 9005	RAL 7035	RAL 9005	RAL 7035
RS130ZA RS130/UZA	04	-	07	-
RS200ZA RS200/UZA	04	05	07	08

How to order :

RS130ZA — C

Catalogue number

Handle material, lock finish

Mounting holes spacing in anti-panic locks

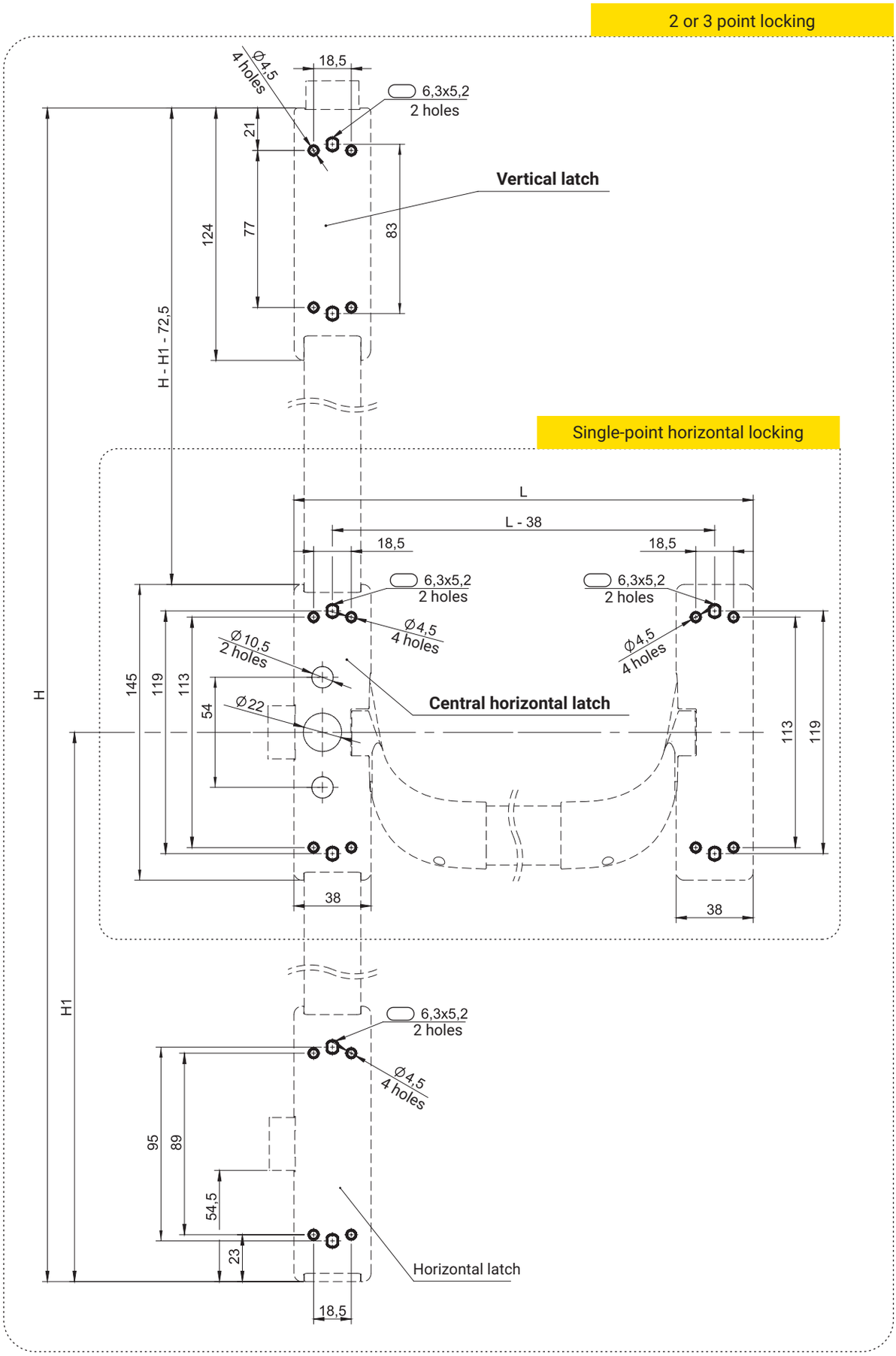

Each lock can be mounted on 4 holes Ø 4,5 or 2 holes 6,3x5,2

Internal lock - ZW
Internal lock PANIK - ZWP

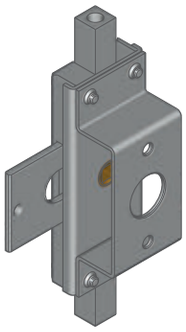

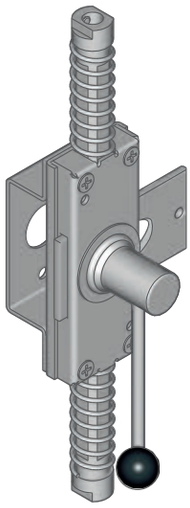

ZWM8 (with thread**M8**) **ZWM10** (with thread **M10**)

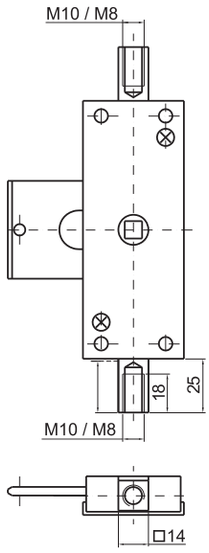

ZWM8 (with hole **ø8**)

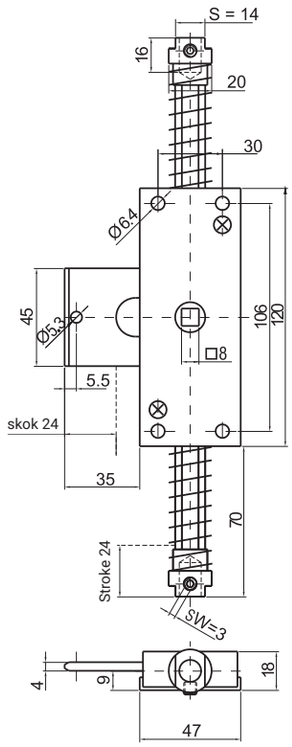

ZWM10 (with hole **ø10**)

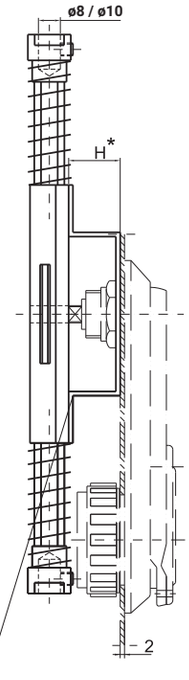

Lock support

NOTE:

1. When ordering swinghandles RS100, RS130, RS140, RS110 RS210, RS200 for **internal lock** you should add letters ZW.
2. When ordering swinghandle RS100, RS200, RS130, RS140 RS110, RS210, for **intednal lock panik,** you should add letters ZWP.
3. Lock support only on special request.
4. Left or Right version only for **internal lock panik**

ZWPM8 (with thread **M8**) **ZWPM10** (with thread **M10**)

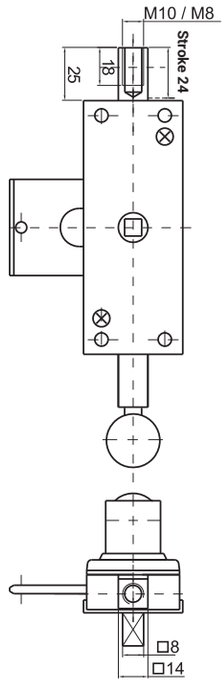

ZWPM8 (with hole **ø8**)

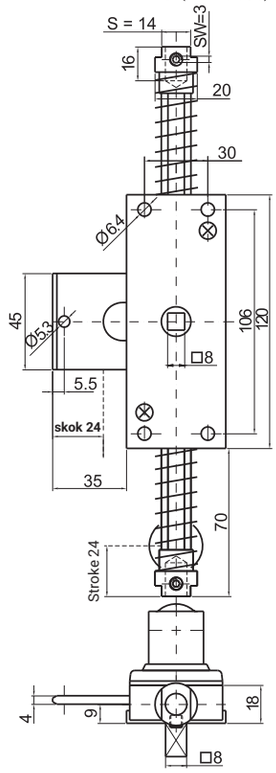

ZWPM10 (with hole **ø10**)

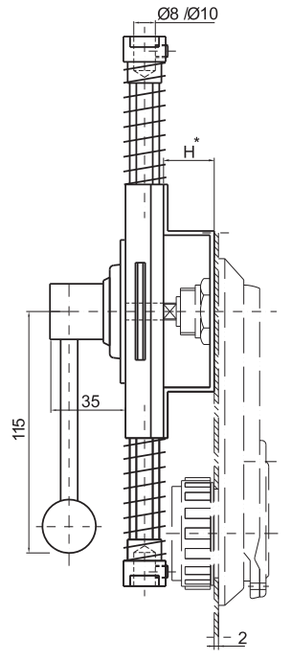

NOTE:

1. When ordering lock ZWP you must define H dimension and version: left or right

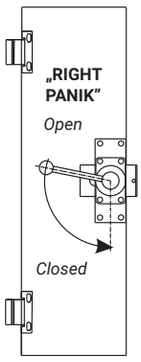

View from the inside

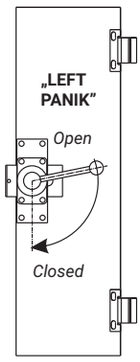

View from the inside

NAME	MATERIAL	NAME	MATERIAL
Internal lock ZWM8	Steel zinc plated	Internal lock panik ZWPM8	Steel zinc plated
Internal lock ZWM10		Internal lock ZWPM10	
Internal lock ZW8		Internal lock ZWP8	
Internal lock Zw10		Internal lock ZWP10	

• **When ordering you must define H dimension**

ZWPM8.002 (with thread **M8**) **ZWPM10.002** (with thread **M10**)

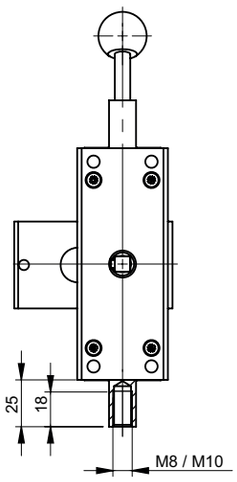

ZWP8.002 (with hole **ø8**)

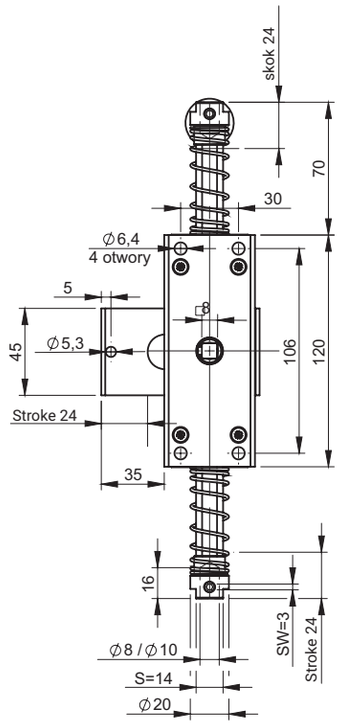

ZWP10.002 (with hole **ø10**)

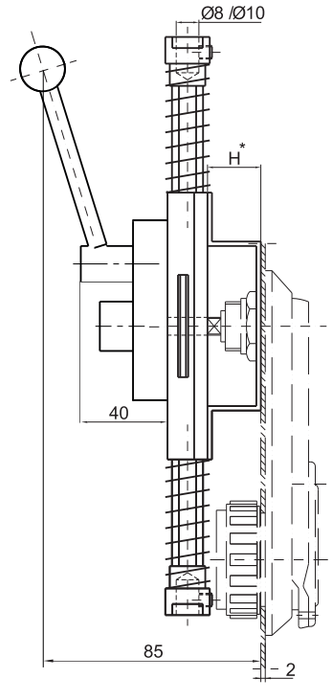

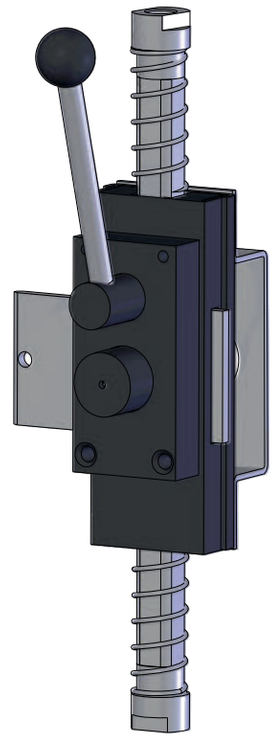

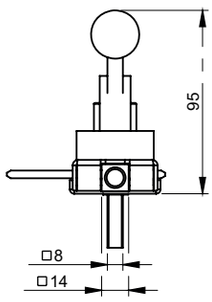

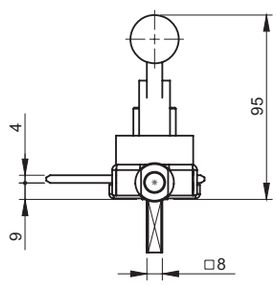

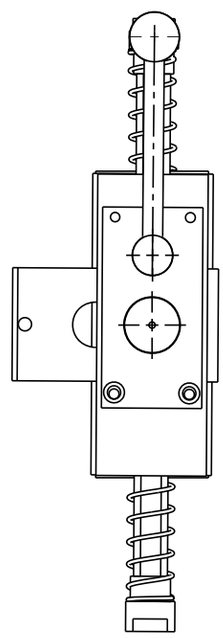

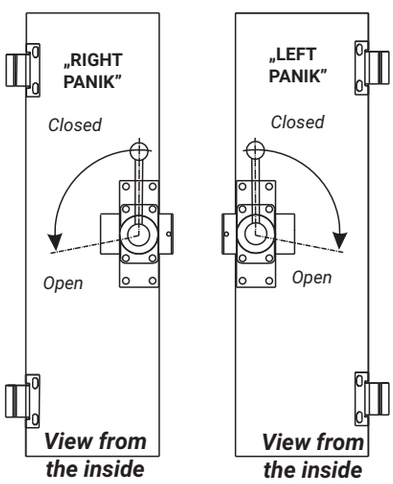

NOTE:

1. When ordering lock ZWP, you must define H dimension and version: left or right

NAME	MATERIAL
Internal lock panik ZWPM8.002	Steel zinc plated
Internal lock panik ZWPM10.002	
Internal lock panik ZWP8.002	
Internal lock panik ZWP10.002	
• **When ordering you must define H dimension**	

Swinghandle RS100, RS200, RS100/U, RS200/U, RS100/T, RS200/T

ROZTOCZE

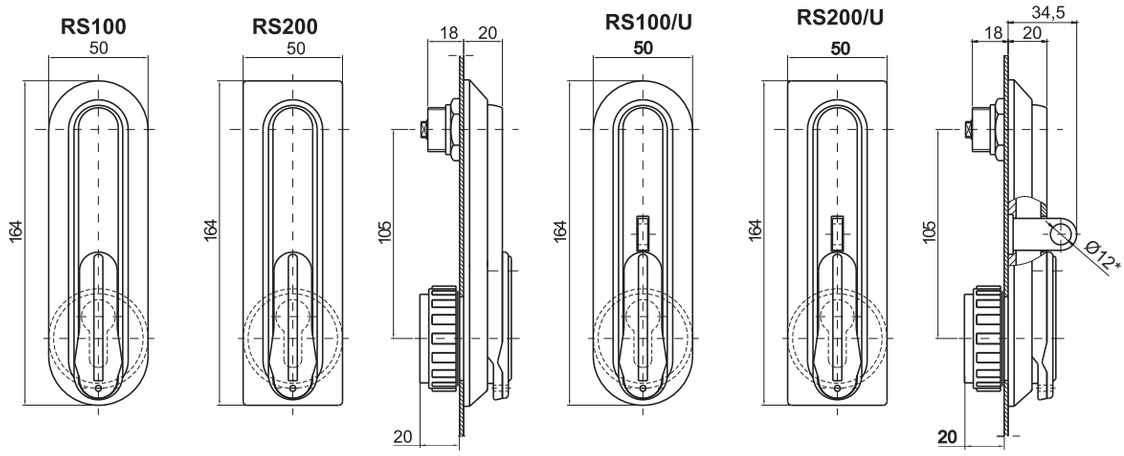

NOTE:

1. When ordering swinghandle RS100, RS200 for **internal lock**, you should add letters e.g. (RS100ZW, RS200ZW).
2. When ordering swinghandle RS100, RS200, for **internal lock panik,** you should add letters ZWP e.g. (RS100ZWP, RS200ZWP)

(*) - Padlock device is available with diameter Ø12

LOCK TYPE	COMPONENTS	MATERIAL
RS100	Housing	Polyamide PA6
RS200		
RS100/U	Housing Padlock device	Polyamide PA6
RS200/U		ZAMAK5

Material and finish [C]			
ZAMAK5		POLYAMIDE PA6	
RAL 9005	RAL 7035	RAL 9005	RAL 7035
04	05	07	08

How to order : RS100/U — [C]

Type of lock

Material handle, finish

• **Additionally** there is a possibility of putting company logo a dust cover

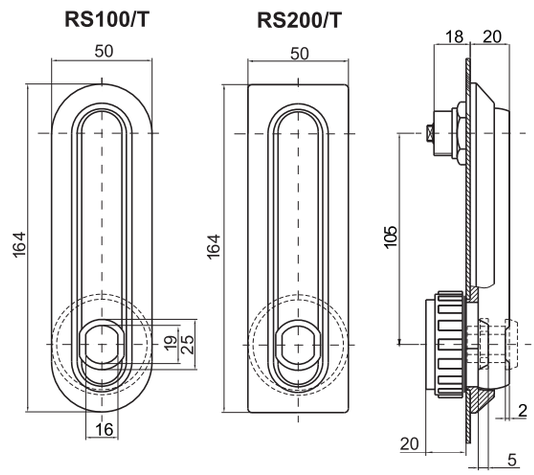

Mounting hole

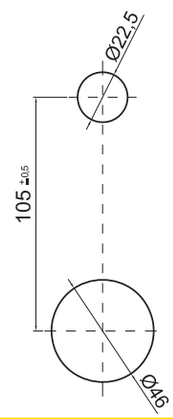

LOCK TYPE	COMPONENTS	MATERIAL	FINISH [C]	
			RAL 9005	RAL 7035
RS100/T	Housing, Handle	Polyamide PA6	07	08
RS200/T				

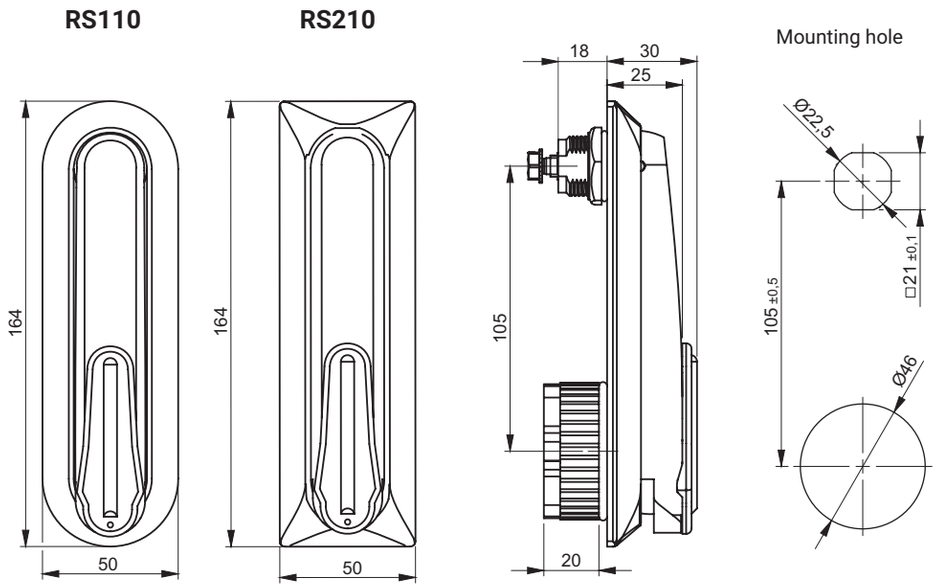

DETAIL	COMPONENTS	MATERIAL	FINISH [C]	
			RAL 9005	RAL 7035
RS110 **RS210**	Housing, Handle	Polyamide PA GF30	07	08

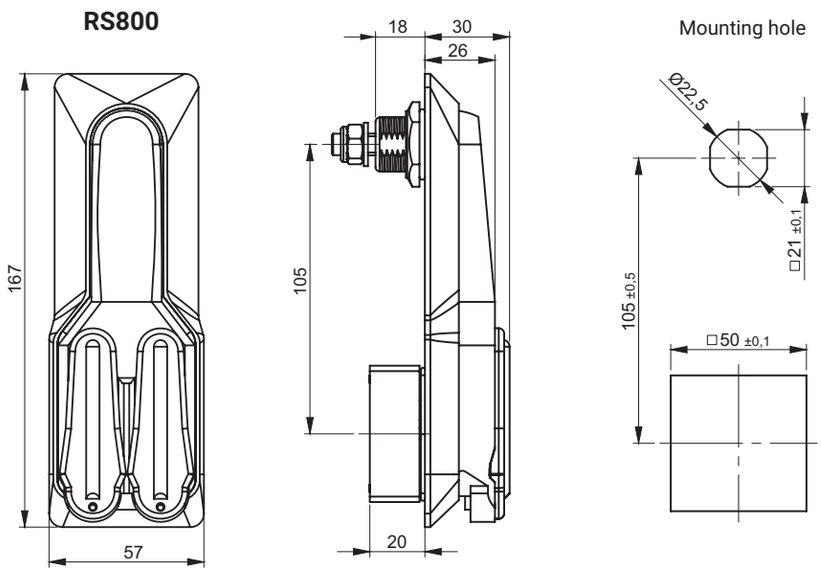

DETAIL	COMPONENTS	MATERIAL	FINISH [C]	
			RAL 9005	RAL 7035
RS800 **RS800W**	Housing, Handle	Polyamide PA GF30	07	08

NOTE:
Locking is the enhanced version or without reinforcement.
RS800W - with steel reinforcement handle.

How to order:

	RS 800	—	C

Catalogue number
Finish

Swinghandle

RS400, RS400W, RS400/U, RS400W/U, RS420, RS420/U,
RS500, RS500W, RS500/U, RS500W/U, RS 520, RS520/U

ROZTOCZE

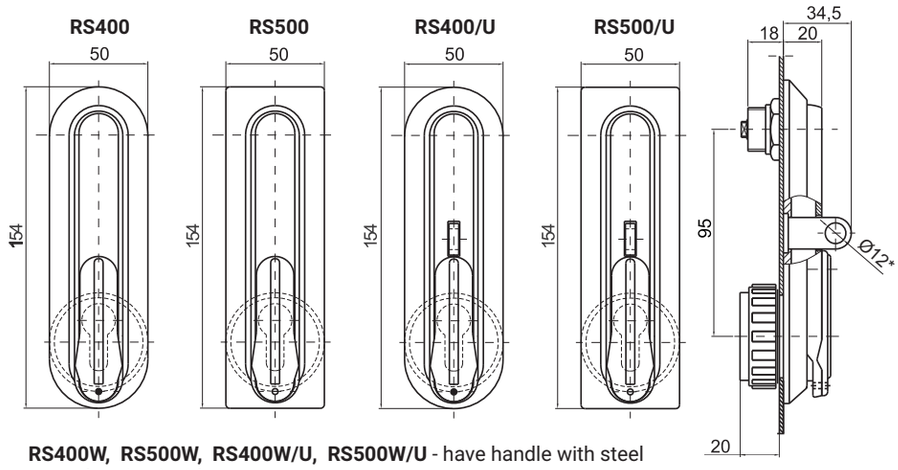

RS400W, RS500W, RS400W/U, RS500W/U - have handle with steel strenghtening inside

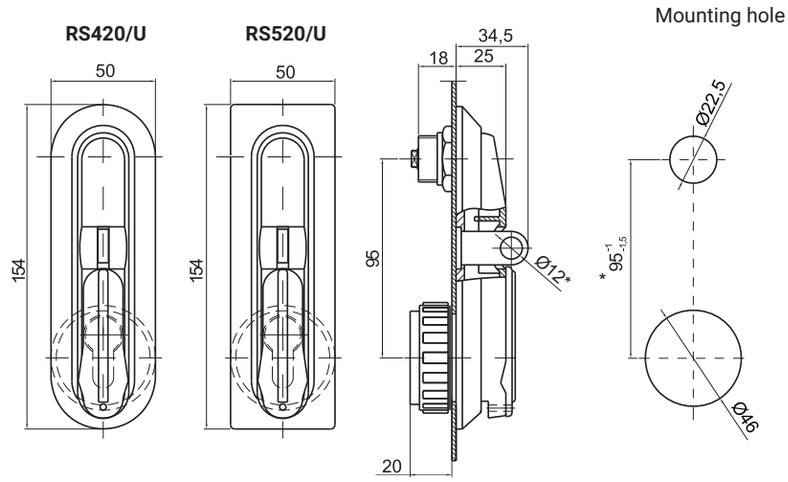

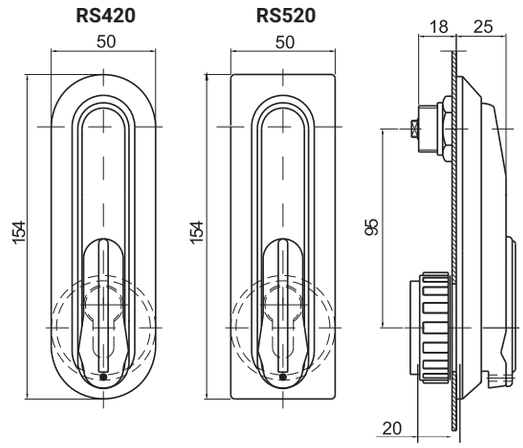

(*) - Padlock device is available with diameter Ø12

NAME		COMPONENTS	MATERIAL	FINISH [C]	
				RAL 9005	RAL 7035
RS400 **RS400W** **RS400/U** **RS400W/U** **RS420** **RS420/U**	**RS500** **RS500W** **RS500/U** **RS500W/U** **RS520** **RS520/U**	Housing, handle	Polyamide PA6	07	08

• **Additionally** there is a possibility of putting company logo on a dust cover

How to order:

RS420/U — C

Catalogue number

Finish

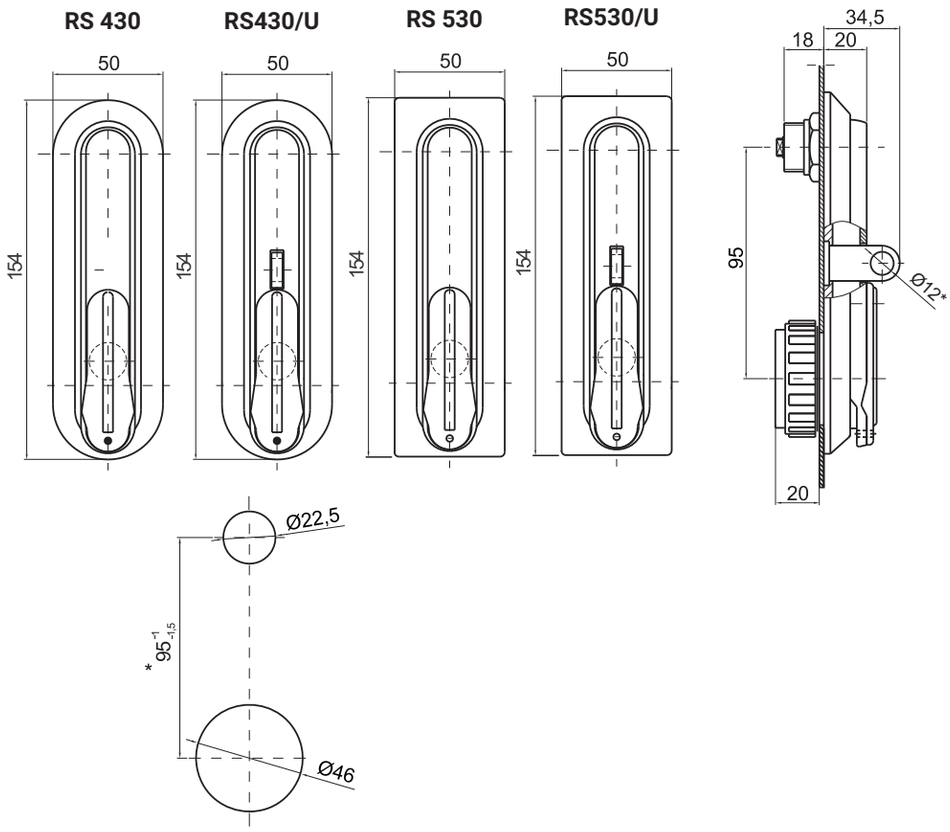

Mounting hole

LOCK TYPE	COMPONENTS	MATERIAL
RS 430, RS 430/U RS 530, RS 530/U	Housing, handle	Poliamide
	Padlock ring	ZAMAK

Inserts							FINISH [C]	
							RAL 9005	RAL 7035
D3	D5	T9	T10	KW 8	S	N	07	08

How to order :

RS430/U — T9 — C

- Type of lock
- Type of insert
- Finish

LOCK TYPE	COMPONENTS	MATERIAL
RS 430, RS 430/U RS 530, RS 530/U	Housing, handle	Poliamid
	Padlock ring	ZAMAK

Key code			FINISH [C]	
1333	455E	2342E	RAL 9005	RAL 7035
405E	1242E	Different code	07	08

How to order :

RS430/U 1333 C

- Type of lock
- Key code
- Finish

Lock with handle RS 430, RS 430/U, RS 530, RS 530/U is compatible with cam: 15, 16, 19, 21, 35, 36, JK-10018, JK1-10018, JK2-10018, J-6000
H.G dimension to be chosen from pages 1C-10 to 1C-17

Swinghandle RS510, RS900

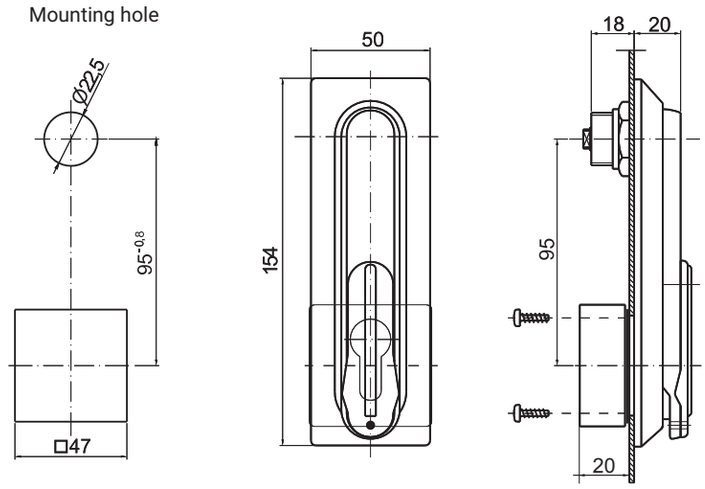

LOCK TYPE	COMPONENTS	MATERIAL	FINISH [C]	
			RAL 9005	RAL 7035
RS510	Housing, handle	Polyamide - PA6	07	08

• ***Additionally*** *there is a possibility of putting company logo on a dust cover*

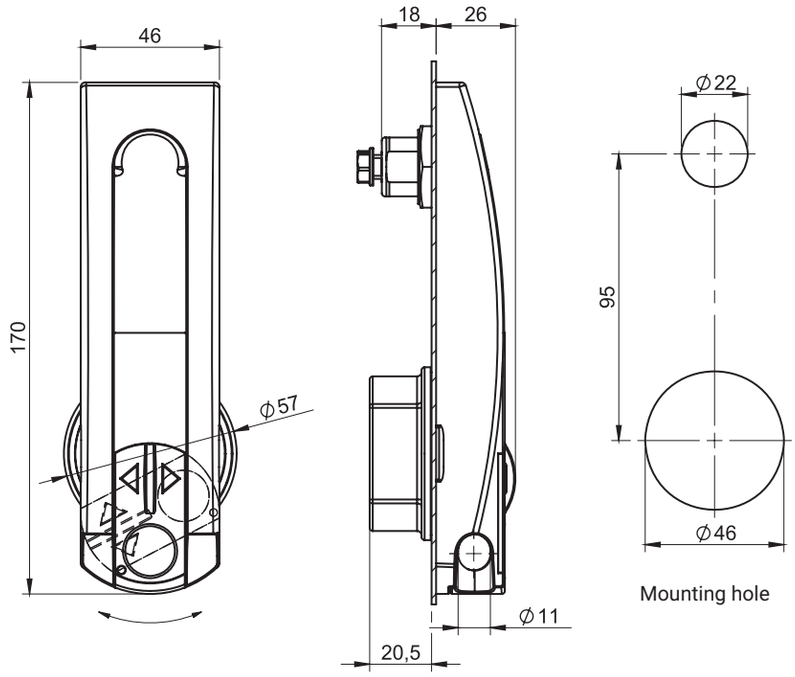

Przesłona wkładki obracana

LOCK TYPE	COMPONENTS	MATERIAL	FINISH [C]	
			RAL 9005	RAL 7035
RS900	Housing, handle	Polyamide - PA6	07	08

How to order :

Type of lock	**RS900**	
Finish		**C**

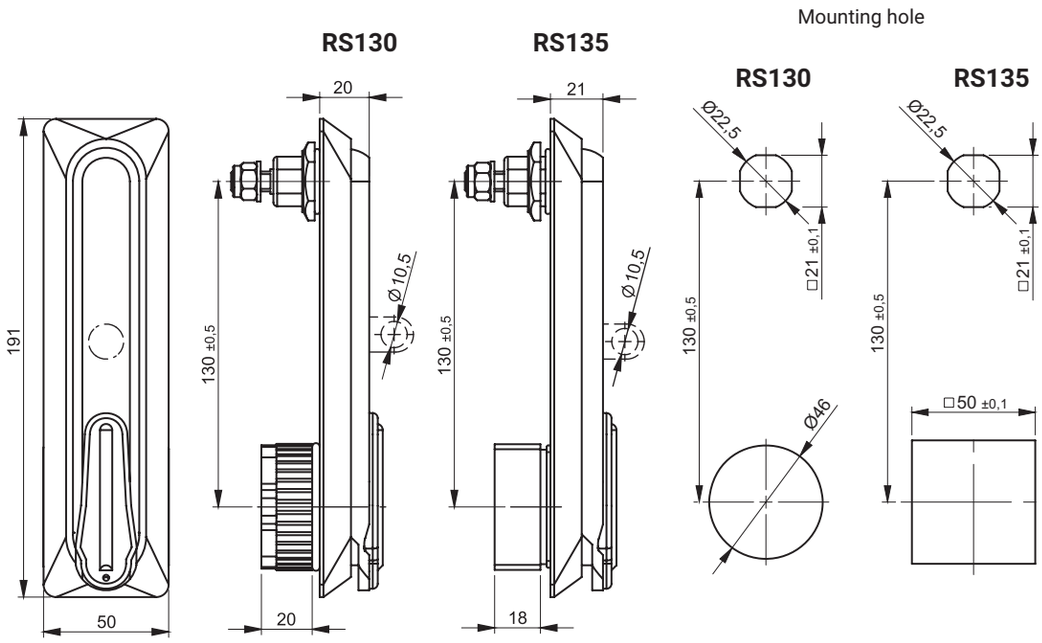

LOCK TYPE	COMPONENTS	MATERIAL
RS130, RS130/U	Housing	Polyamide - PA6 GF30
RS135, RS135/U		

Material and finish [C]	
ZAMAK	Polyamide PA6 GF30
RAL9005	RAL9005
04	07

How to order : RS130 — C

Type of lock

Material handle, colour

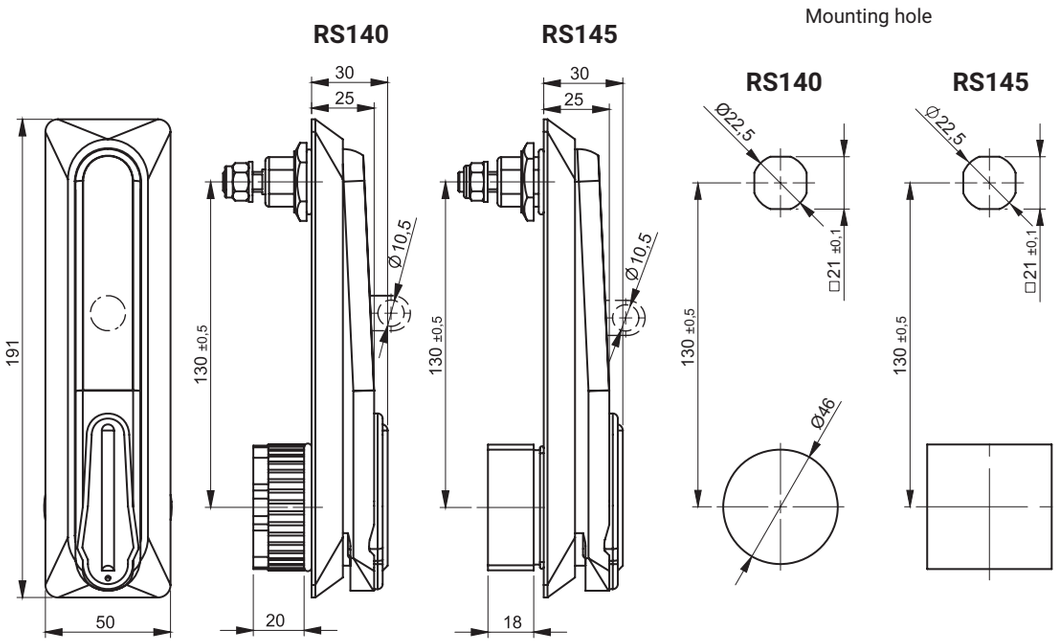

LOCK TYPE	COMPONENTS	MATERIAL	FINISH [C]
			RAL 9005
RS140, RS140/U RS145, RS145/U	Housing	Polyamide PA6 GF30	04
	Handle	ZAMAK5	

Elektronic lock RS-E

It has two opening points:

- Mechanical - cylinder with a patent key for emergency opening in case of power failure
- Electronic - built-in micro servo

Technical data:

- RFID technology
- 4-digit PIN code
- Compatible with the access control system EMI-One
- Built-in handle position sensor in the lock for warning purposes the user to leave the lock open when the cabinet door is closed.
- Power supply for 12V DC lock
- Built-in buzzer for lock action signaling
- LED indicating the lock status
- Storage of login information Minimum 10 years

- The RS-E.001.M lock cooperates with the cogwel mechanism MZ2 (pp. 1C-30 to 1C-31)
- The RS-E.001.N lock cooperates with the 1C.902.001 cover plate.(pages 1C-27) and with cams 1-point from group 11, 13

RS-E.001.N

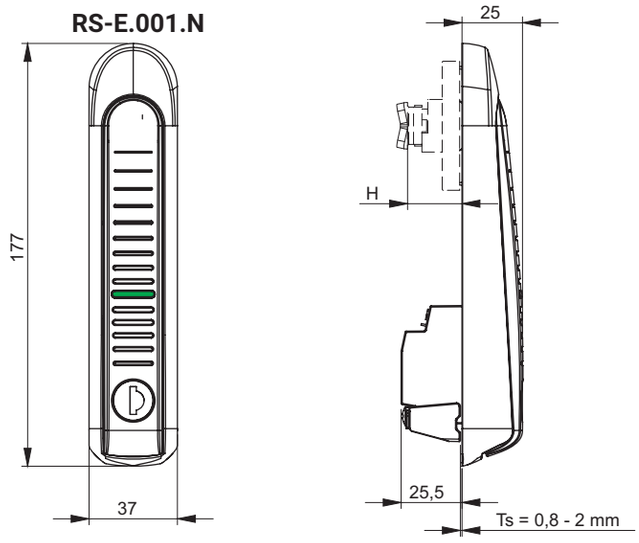

RS-E.001.M

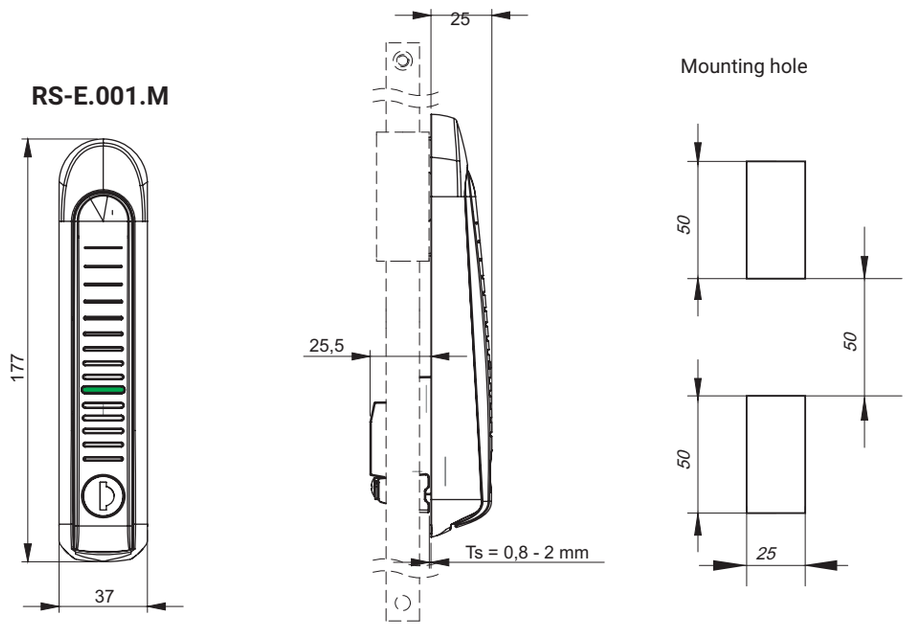

Power supply : 12V DC.
Lock RS-E.001MZ is compatible with cogwheel mechanism MZ2 (pg 1C-30 to 1C-31) - should be ordered separately.
Lock RS-E.001N is compatible with a cap 1C.902.001 (pg 1C-27)
and cams: 1-point from group 11, 13 (pg 1C-10, 1C-11) - should be ordered separately.
* EMI access control equipment to be ordered separately

CATALOGUE NUMBER	COMPONENTS	MATERIAL	FINISH [C]
			RAL 9005
RS-E.001.N RS-E.001.M	Handle, housing	PA6 GF30	07

CONFIGURATIONS OF ACCESS ARE POSSIBLE		
DESCRIPTION		CONFIGURATIONS
key	Standard lock	001
key + RFID card	Stand-alone version with RFID system	002
key + keypad	Stand-alone version with keypad lock	003
key + EMI	Electronic lock with EMI* control system	004
key + RFID card + EMI	Electronic lock with EMI* control system	005

How to order : **RS-E.001.N** — **002** — **[C]**

Type of lock
Configurations of access
Finish

Swinghandle RS 650

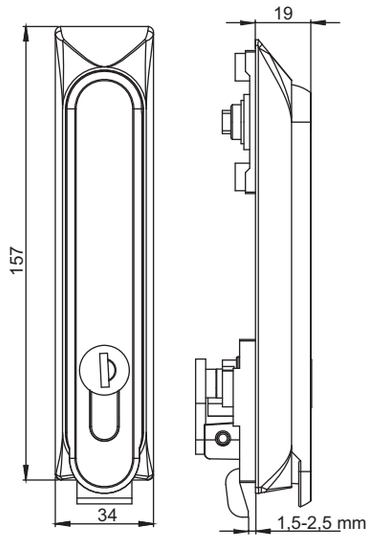

Lock type A

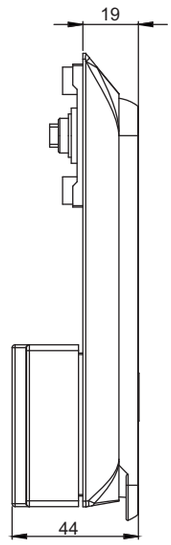

Lock type B

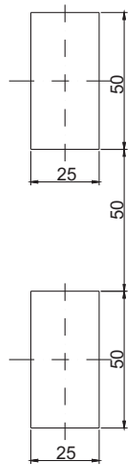

Mounting hole

With cursor

With ear

Standard version

Type lock A	Standard	Pin shaped	—	RS650.001
		Cylinder	—	RS650.002
		Cylinder insert	—	RS650.003
	Ear	Pin shaped	—	RS650.004
		Cylinder	—	RS650.005
		Cylinder insert	—	RS650.006
	Cursor	Pin shaped	—	RS650.007
		Cylinder	—	RS650.008
		Cylinder insert	—	RS650.009
Type lock B	Standard	Pin shaped	—	RS650.101
		Cylinder	—	RS650.102
		Cylinder insert	—	RS650.103
	Ear	Pin shaped	—	RS650.104
		Cylinder	—	RS650.105
		Cylinder insert	—	RS650.106
	Cursor	Pin shaped	—	RS650.107
		Cylinder	—	RS650.108
		Cylinder insert	—	RS650.109

TYPE OF LOCK						COMPONENTS		MATERIAL						
RS 650						Body, Handle		Polyamide PA6 GF30						
KEY CODE						FINISH [C]		PIN						
1333	405E	455E	1242E	2342E	RK	RAL 9005	RAL 7035							
						07	08	D3	D5	T9	T10	KW 8	S	N

How to order:

	RS650.101	—	**1333**	— **[C]**
Catalogue number				
Type of lock				
Finish				

RS600

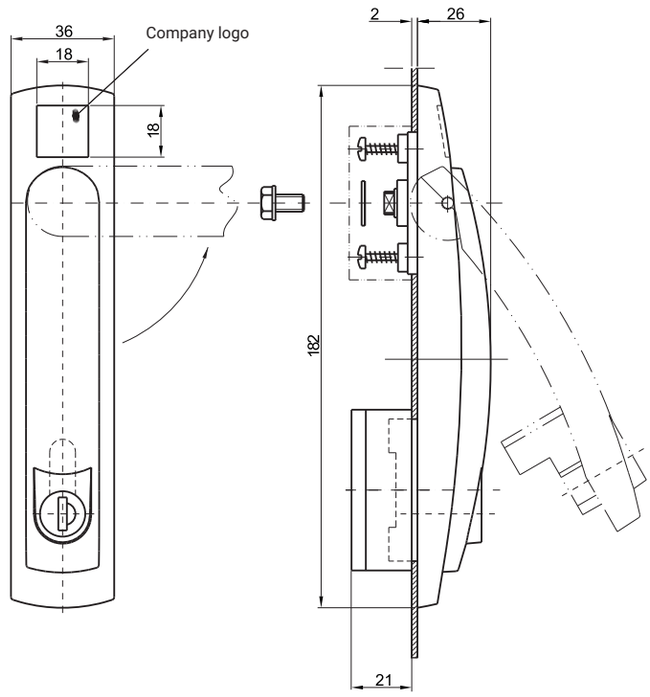

Mounting hole

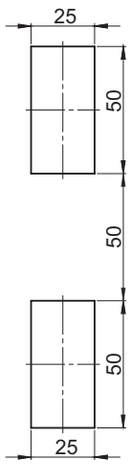

RS610.M
RS610.N

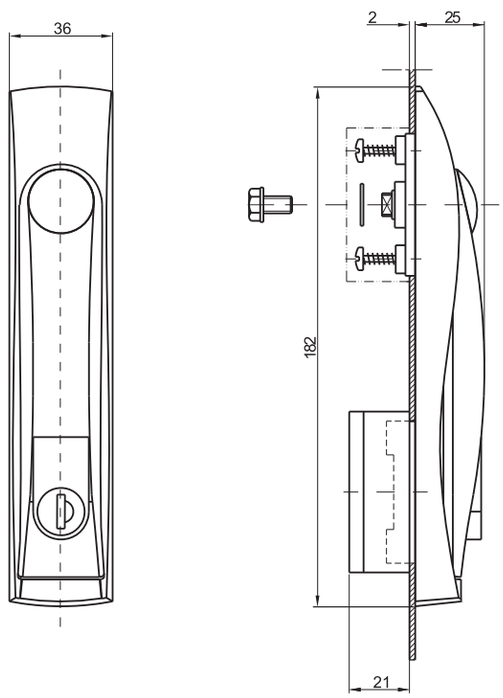

* possibility of making a logo by Pad Printing

TYPE OF LOCK	COMPONENTS	MATERIAL	FINISH [C]
			RAL 9005
RS600	Body, Handle	Polyamide PA6 GF30	07
RS610			

How to order: **RS610** — **[C]**

Type of lock

Finish

Swinghandle RS173

stainless steel

IP65

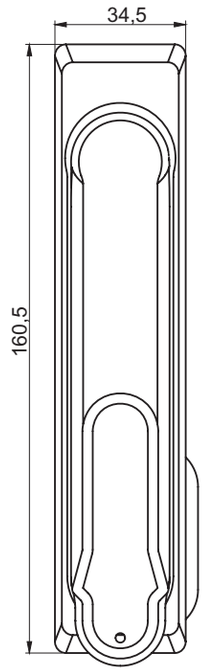

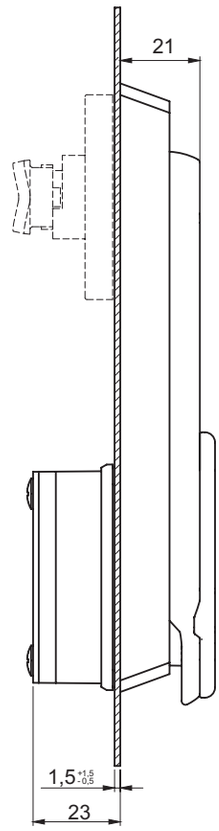

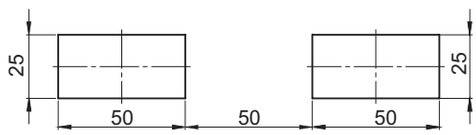

Mounting hole

Additional equipment for the MZ cogwheel mechanism
also for the N cap
should be ordered separately check page 1A-3, 1A-4

NAME	COMPONENTS	MATERIAL
RS173.002	Body, Handle	Stainless steel

How to order: **RS173.002** — **SN**

Type of lock

Finish

RS700 **RS710** **RS700B / RS710B**

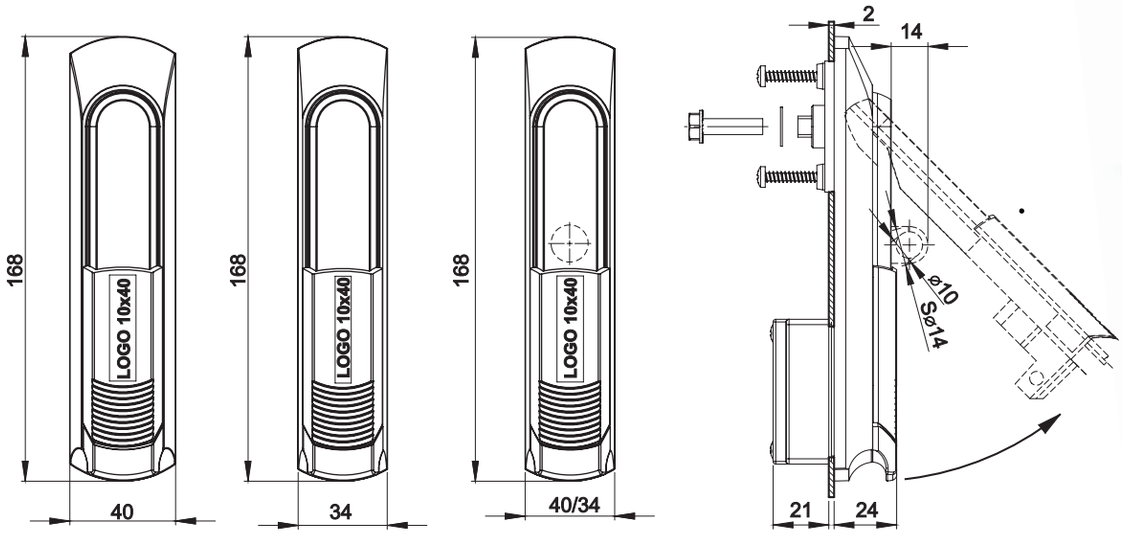

Version for the rod control

Cut out

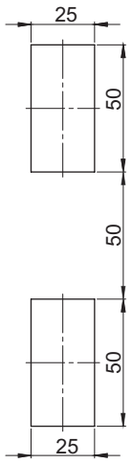

Material and colour [C]			
ZAMAK5		POLYAMIDE	
RAL 9005	RAL 7035	RAL 9005	RAL 7035
04	05	07	08
TYPE OF SWINGHANDLE	**VERSION**	**COMPONENTS**	**MATERIAL**
RS700.N	For the cap 1C.902.001	Housing, Sliding dust cover	Polyamide
RS710.N			
RS700B.N			
RS710B.N			
RS700.M	For the rod control		
RS710.M			
RS700B.M			
RS710B.M			

How to order : **RS700B.M** — **[C]**

Type of lock

Material handle, finish

The lock is fiitted with profile which should be ordered separately (pg. 1C-1, 1C-2)

The lock is fitted with gear mechanism (pg. 1C-30 to 1C-33)

or the cover plate 1C.902.001 (pg.1C-27), should be ordered separately.

Lock RS700-U, RS710-U - version with the pin for padlock.

Swinghandle RS715, RS716

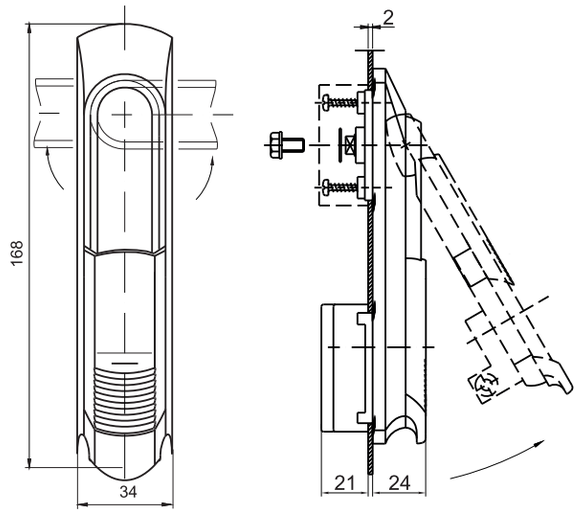

LOCK TYPE	VERSION	COMPONENTS	MATERIAL
RS715.N	Cap 1C.902.001	Body, Handle	Polyamide
RS715.M	Cogwheel mechanism MZ		Polyamide

KEY CODE						FINISH [c]	
						RAL 9005	RAL 7035
1333	405E	455E	1242E	2342E	RK	07	08

How to order :

RS715.M — 1333 — [C]

Lock type

Key code

Finish

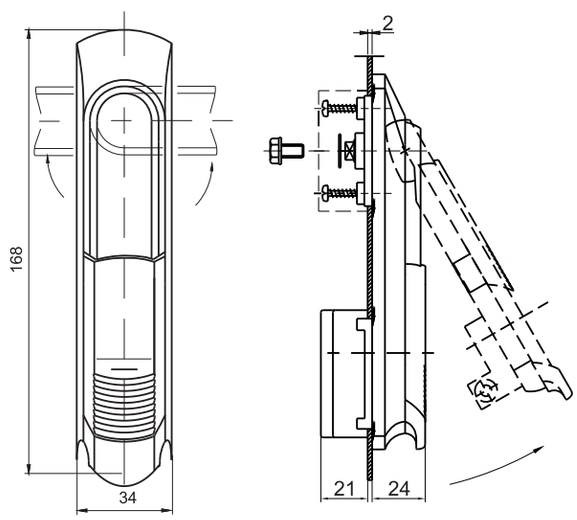

Cap 1C.902.001
page 1C-27

Cogwheel mechanism MZ
page 1C-28 do 1C-33

LOCK TYPE	VERSION	COMPONENTS	MATERIAL
RS716.N	Cap 1C.902.001	Body, Handle	Polyamide
RS716.M	Cogwheel mechanism MZ		Polyamide

PIN							FINISH [c]	
							RAL 9005	RAL 7035
D3	D5	T9	T10	KW 8	S	N	07	08

How to order :

RS716.N — T9 — [C]

Lock type

Pin type

Finish

*possibility to make company logo on handle

RS730-45

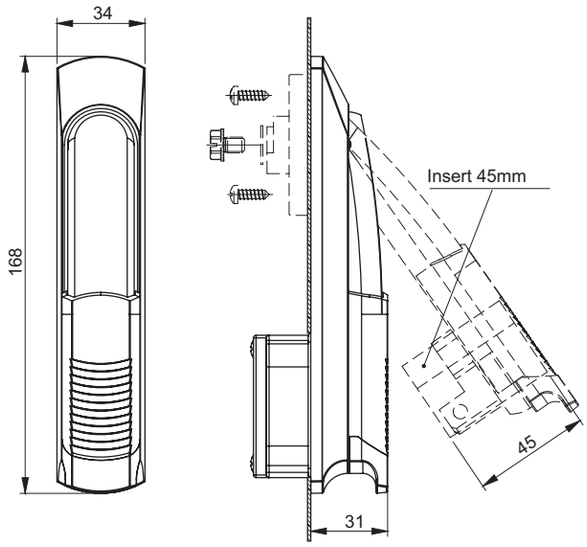

Mounting hole

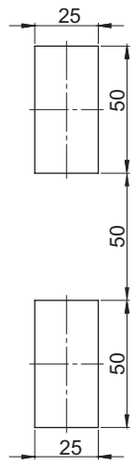

RS730-47

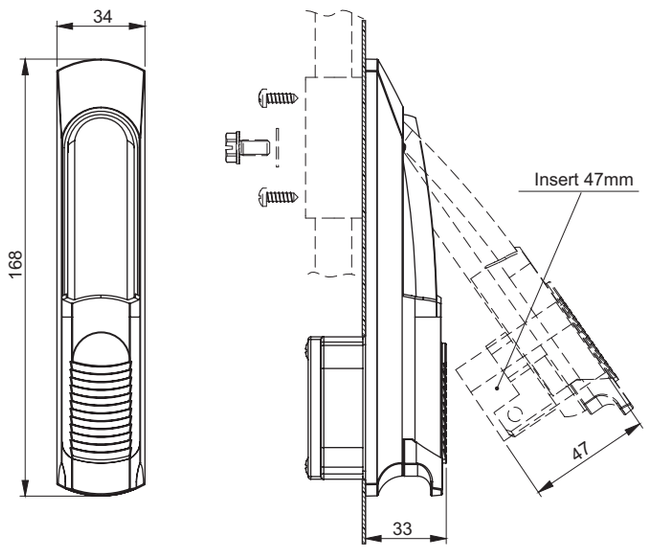

LOCK TYPE	VERSION	COMPONENTS	MATERIAL	FINISH [C]	
				RAL 9005	RAL 7035
RS730-45.N	For the cap 1C.902.001	Housing, Handle	Polyamide PA GF30	07	08
RS730-47.N					
RS730-45.M	For the rod control				
RS730-47.M					

How to order :

RS730-45.N — **[C]**

Lock type

Finish

The lock is fiitted with profile which should be ordered separately (pg. 1C-1, 1C-2)

The lock is fitted with gear mechanism (pg. 1C-30 to 1C-33)

or the cover plate 1C.902.001 (pg.1C-27), should be ordered separately.

Swinghandle RS717

RS717

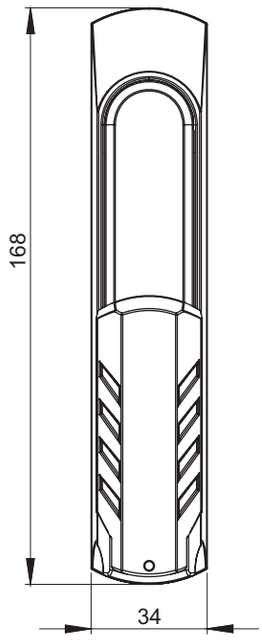

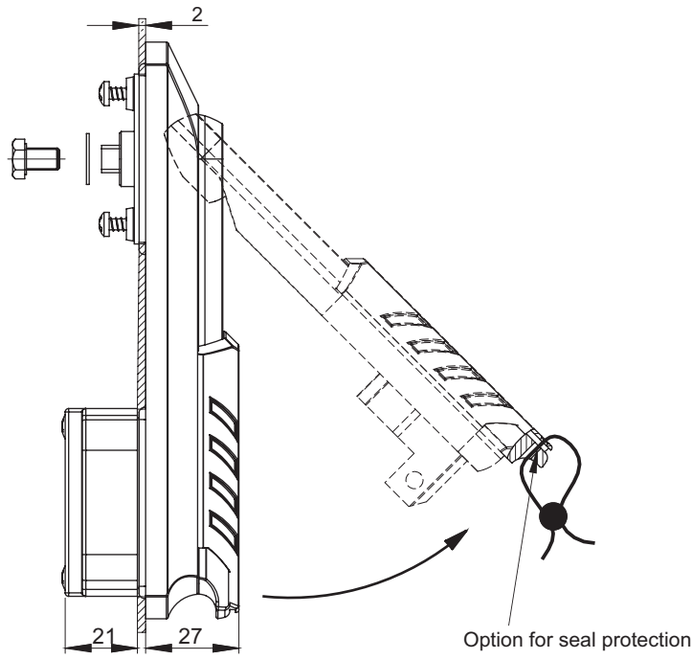

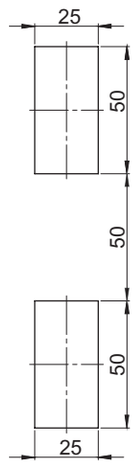

Cut out

TYPE OF LOCK	VERSION	COMPONENTS	MATERIAL	FINISH [C]	
				RAL 9005	RAL 7035
RS717.N	For the cap 1C.902.001	Housing	PA6 GF30	04	05
RS717.M	For the rod control	Handle, Slide	ZAMAK		

How to order : **RS717.M** — **[C]**

Type of lock

Finish

The lock is fiitted with profile which should be ordered separately (pg. 1C-1, 1C-2)
The lock is fitted with gear mechanism (pg. 1C-30 to 1C-33)
or the cover plate 1C.902.001 (pg. 1C-27), should be ordered separately.
Option for seal protection.

RS720

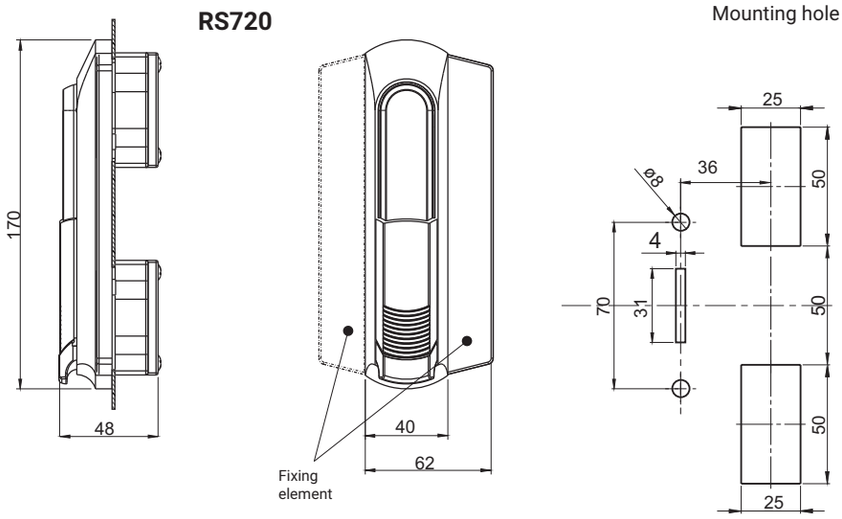

NOTE:
Fixing element can be fixed on left and right side of the lock

TYPE OF LOCK	COMPONENTS	MATERIAL	FINISH [C]
			RAL 9005
RS720.001	Body, Handle, Fixing element	Polyamide	07
RS720.002	Body, Fixing element	Polyamide	07
	Handle	ZAMAK	04

RW400.N **RW410.N** **RW400.M** **RW410.M**

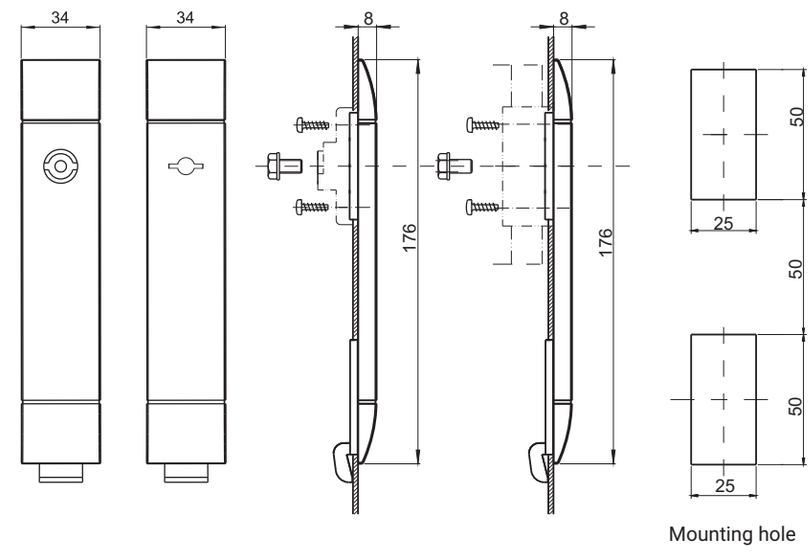

1C.912.001

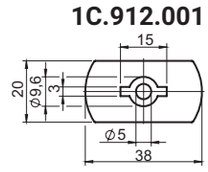

Protective cover compatible with locks: RW100, RW110, RW400

TYPE OF LOCK	COMPONENTS	MATERIAL	FINISH [C]
			RAL 9005
RW400.N, RW410.N RW400.M, RW410.M	Body	Polyamide	07
1C.912.001	Protective cover	Polyamide	07

How to order : **RW400.N** — **[C]**
Type of lock
Finish

Swinghandle RS761

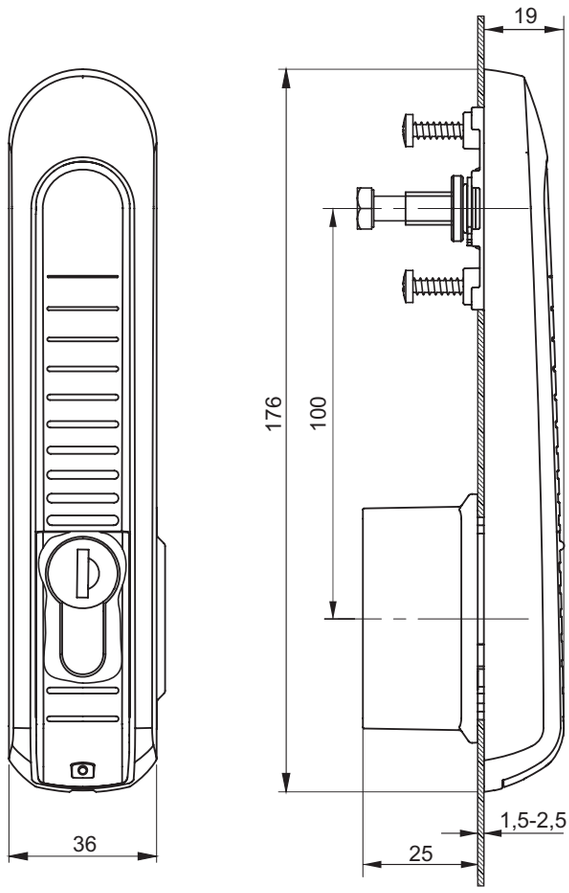

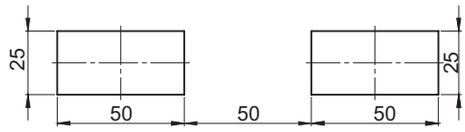

Cut out

TYPE OF LOCK RS761	RS761.N	Version for a cap
	RS761.M	Version for a cogwheel mechanism

COMPONENTS	MATERIAL	FINISH [C]	
		RAL9005	RAL7035
Housing	Polyamide PA6 GF30	07	08
Handle			
Sliding dust cover			

How to order : **RS761.N** — **[C]**

Type of lock

Finish

All components to order separately for version under a cap and a cogwheel mechanism are shown in charts, check pg. 1B-21
Patented insert to order separately, check pg 1C-1 to 1C-2.

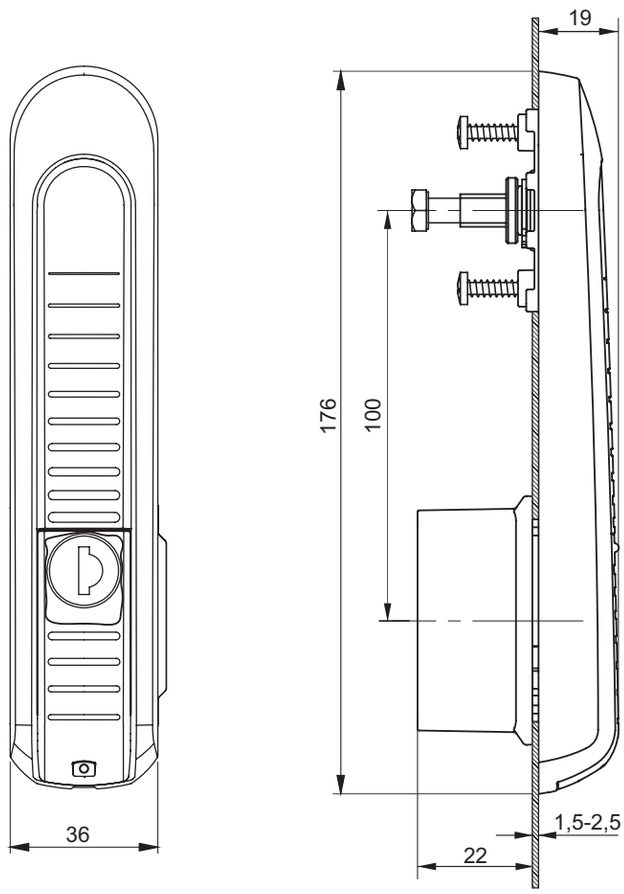

Cut out

TYPE OF LOCK RS762	RS762.N	Version for a cap
	RS762.M	Version for a cogwheel mechanism

COMPONENTS	MATERIAL	FINISH [C]		Cylinder profile					
		RAL9005	RAL7035	Key code					
Housing Handle Sliding dust cover	Polyamide PA6 GF30	07	08	1333	405E	455E	1242E	2342E	Different code RK

How to order : **RS762.N** — **1333** — **[C]**

Type of lock

Key code

Finish

All components to order separately for version under a cap and a cogwheel mechanism are shown in charts, check pg. 1B-21

Swinghandle version for a cap

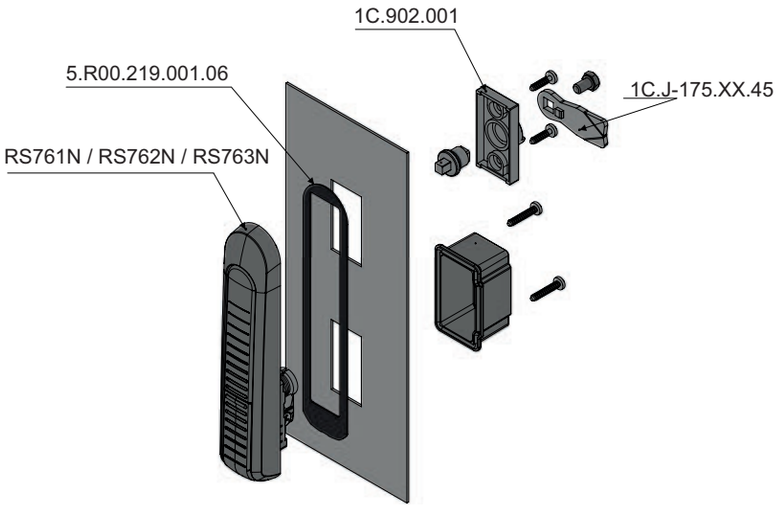

Components ordered separately		
TYPE OF LOCK	**DETAIL**	**PAGE**
RS761.N **RS762.N** **RS763.N**	Cap 1C.902.001 / 1C.902.003	1C-27
	1-point cam, group: 11, 13	1C-10, 1C-11
	2-point cam, group: 21	1C-15
	3-point cam, group: 31, 33	1C-17, 1C-18
	Rods	1C-4, 1C-5
	Rod guide	1C-6
	Gasket IP65 5.R.00.219.001.06	-

Locks for the gear mechanizm

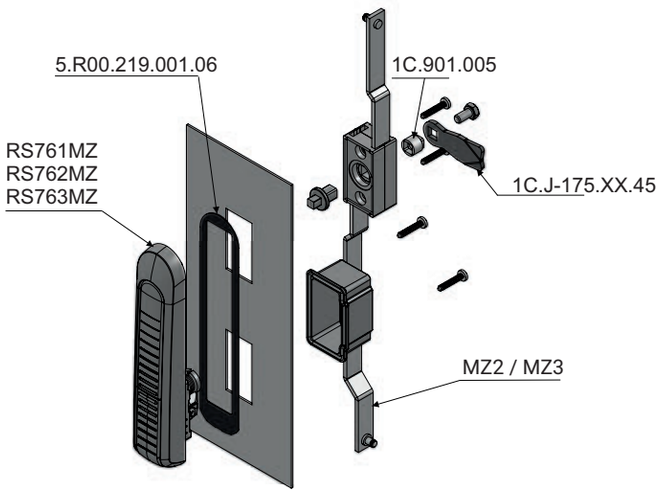

Components ordered separately		
TYPE OF LOCK	**DETAIL**	**PAGE**
RS761.M **RS762.M** **RS763.M**	Cogwheel mechanism MZ2 / MZ3	1C-30 - 1C-32
	1-point cam, group: 11, 13	1C-10, 1C-11
	Bushing 1C.901.005	1C-27
	Flat rod	1C-34 - 1C-40
	Flat rod guide and brackets	1C-6, 8, 1C-35 - 1C-40
	Gasket IP65 5.R.00.219.001.06	-

Standard lock has a class of IP54.
In case of using an additional gasket number 5.R00.219.001.06 (to be ordered separately), the lock has a class of IP65.

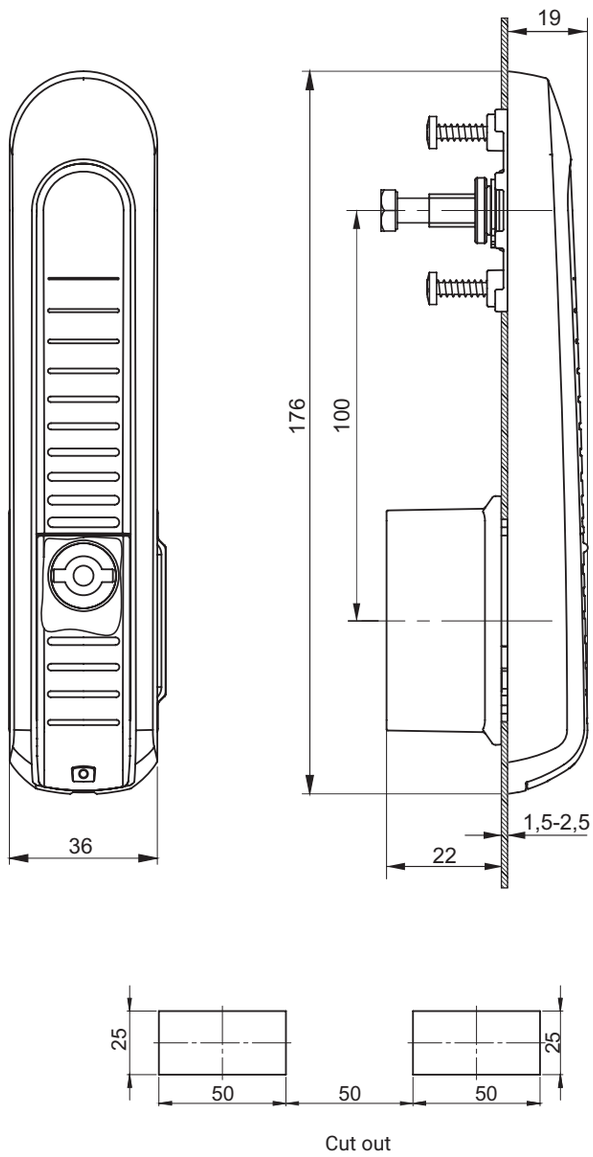

TYPE OF LOCK RS763	RS763.N	Version for a cap
	RS763.M	Version for a cogwheel mechanism

COMPONENTS	MATERIAL	FINISH [C]		Shaped profile						
		RAL9005	RAL7035	Inserts						
Housing	Polyamide PA6 GF30	07	08	D3	D5	T8	T9	KW8	S	N
Handle										
Sliding dust cover										

How to order : **RS763.M** — **D5** — **[C]**

Type of lock

Insert

Finish

All components to order separately for version under a cap and a cogwheel mechanism are shown in charts, check pg. 1B-21

Swinghandle RS300, RS750

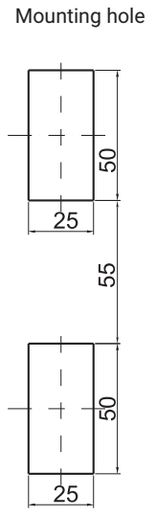

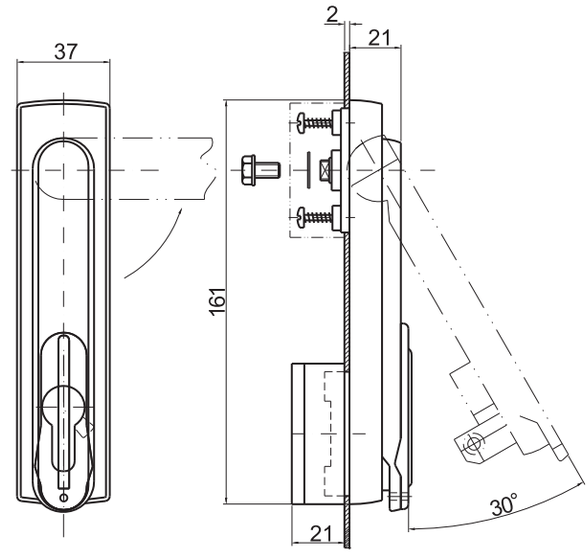

TYPE OF LOCK	COMPONENTS	MATERIAL	FINISH [C]	
			RAL9005	RAL7035
RS300.N **RS300.M**	Body, Handle,	Polyamide PA6 GF30	07	08

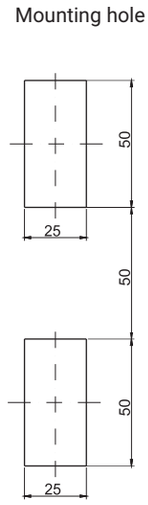

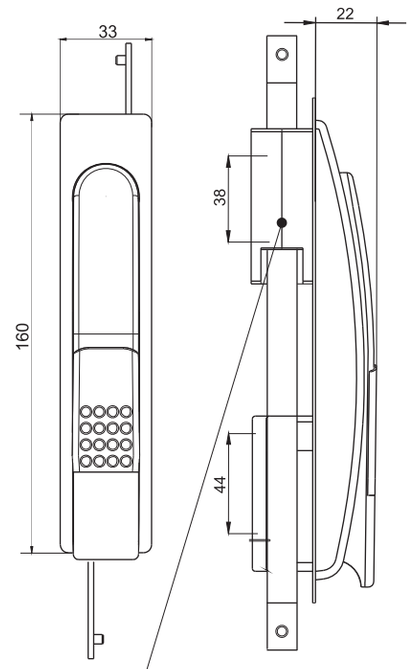

Cogwheel mechanism, page 1C-30-33

TYPE OF LOCK	COMPONENTS	MATERIAL	FINISH [C]	
			RAL9005	RAL7035
RS750.N **RS750.M**	Body, Handle,	Polyamide PA6 GF30	07	08

How to order : **RS750.M** — **[C]**

Type of lock

Finish

NEW

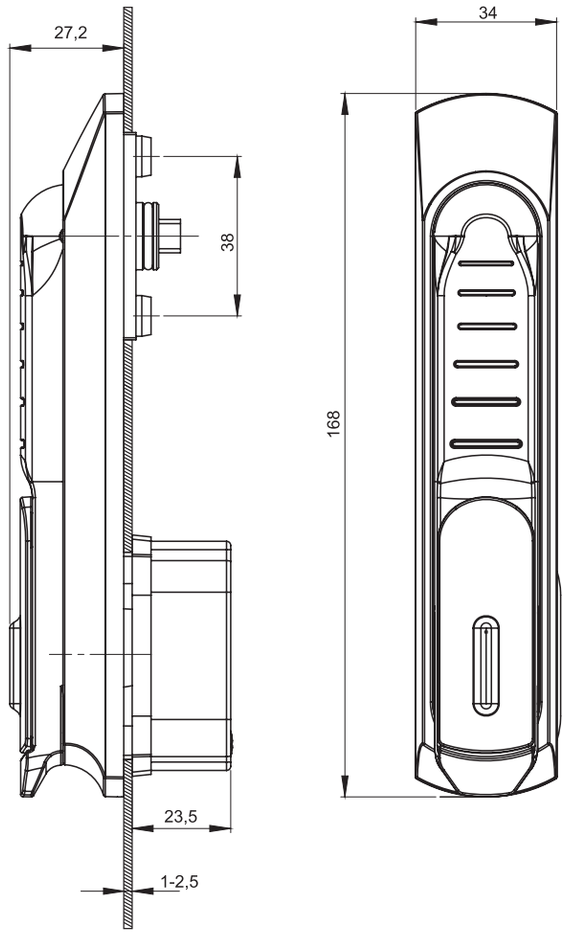

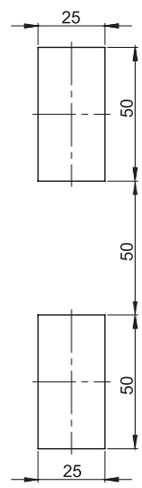

Cut out

Swinghandle for Scandinavian cylinder.

Cylinder not included.

TYPE OF LOCK	VERSION	COMPONENTS	MATERIAL	FINISH [C]
				RAL 9005
RS790.N	For a cap	Housing, Handle, Sliding dust cover	Polyamide	07
RS790.M	For a cogwheel mechanism	Housing, Handle, Sliding dust cover	Polyamide	07

How to order : RS790.M — [C]

Type of lock

Finish

All components to order separately for version under a cap and a cogwheel mechanism are shown check pg. 1C-30 - 1C-32

Swinghandle RS154

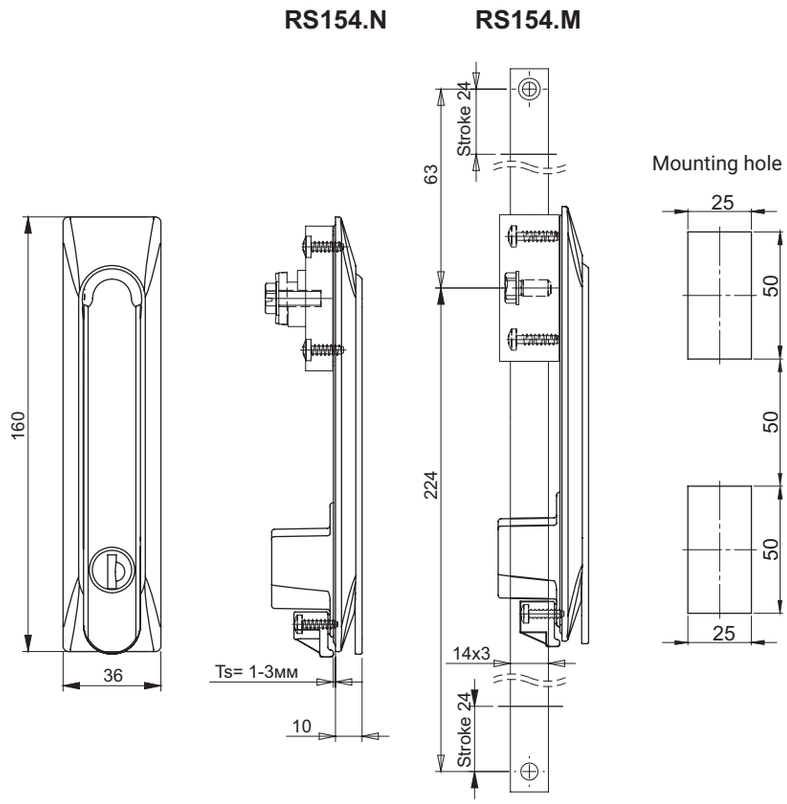

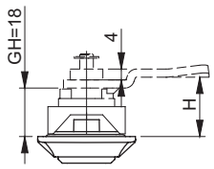

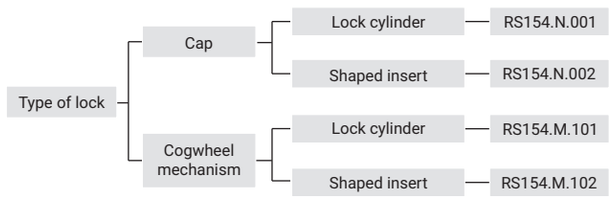

COMPONENTS	MATERIAL	FINISH [C]		LOCK CYLINDER		SHAPED INSERT	
		RAL 9005	RAL 7035	KEY CODE		INSERT	
Body	PA6 GF30	07	08	Different code RK	1333	T9	KW8
Handle		07	08				
Cap		07	-				
Adapter	ZAMAK	-	-				
Cogwheel mechanism	PA6 GF30	07	-				
Tie-rod MZ	Steel*	Zinc plated					

How to order:

RS154.M.101 — **1333** — **[C]** — **[C]**

- Type of lock
- Type of insert
- Body finish
- Handle finish

Lock comes as a set in version for cogwheel mechanism or a cap.
All necessary components are attached.
Additional components ordered seperately, check page:

- 1 point cam (group: 11, 13)..... pg: 1C-10, 1C-11
- 2 point cam JA-20018 ver. 3 (group: 21)..... pg: 1C-15
- 3 point cam (group: 38) ..... pg: 1C-22
- Rods..... pg: 1C-4, 1C-5-7
- Flat rod..... pg: 1C-34 to 1C-40

Notes:
Ts- mounting sheet thickness
*stainless steel tie-rod available

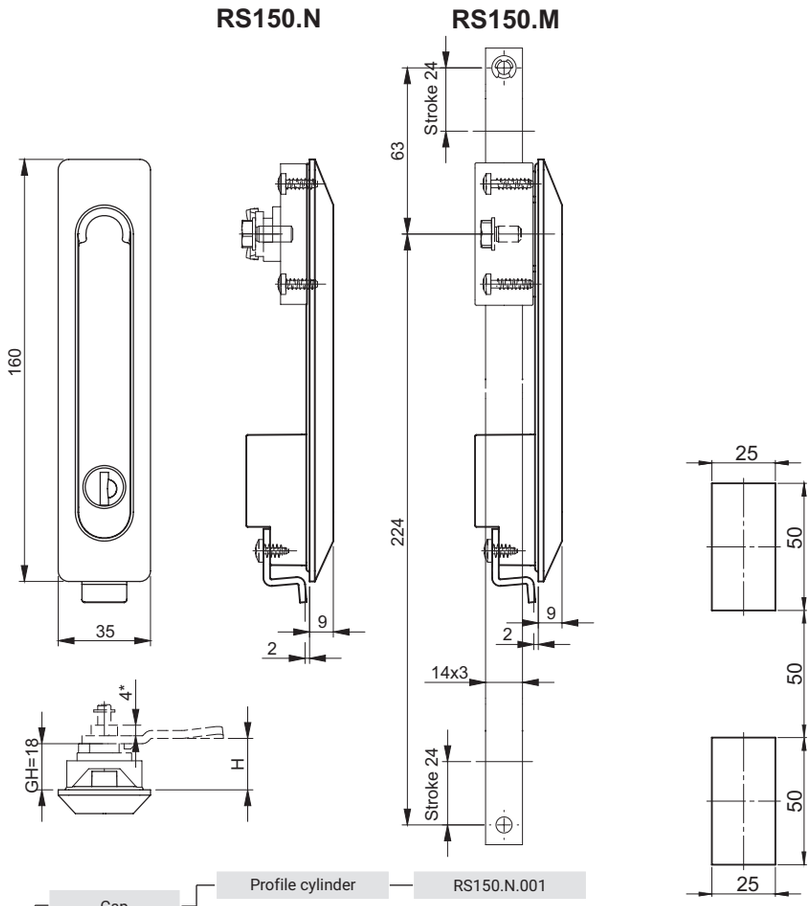

Mounting hole

- Type of lock
  - Cap
    - Profile cylinder — RS150.N.001
    - Insert shape — RS150.N.002
  - Cogwheel mechanism
    - Profile cylinder — RS150.M.101
    - Insert shape — RS150.M.102

COMPONENTS	MATERIAL	FINISH			PROFILE CYLINDER		INSERT SHAPE	
		CHROM	RAL 9005	RAL 7035	KEY CODE		INSERT	
Body	PA6 GF30	-	07	08	Different code RK	1333	T9	KW8
Handle	ZAMAK	01	04	05				
Cap	PA6 GF30	-	07	-				
Cam adapter	ZAMAK	-	-	-				
Cogwheel mechanism	PA6 GF30	-	07	-				
Tie-rod MZ	Steel	Zink plated						

How to order: RS150.M.101 — 1333 — [C] — [C]

- Lock type
- Type of insert
- Finish handle
- Finish body

Lock comes in a set in version for cohwheel mechanism and for a cap.
All components for assable are attached in a set.
Additional components ordered seperately, check page:

- 1 point cam (group: 11, 13)..... pg: 1C-10, 1C-11
- 2 point cam JA-20018 ver. 3 (group: 21)..... pg: 1C-15
- 3 point cam (group: 38)..... pg: 1C-22
- Rods..... pg: 1C-4, 1C-5-7
- Flat rods..... pg: 1C-34 to 1C-40

Tie-rods of cogwheel mechanism available in stainless steel

Swinghandle RS980

ROZTOCZE

NEW

RS980

RS980/U

RS980

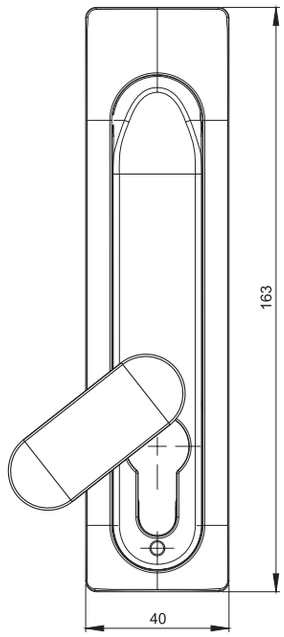

RS980/U

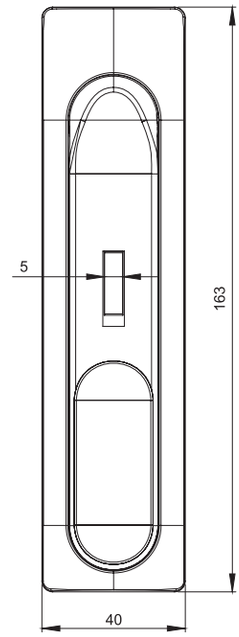

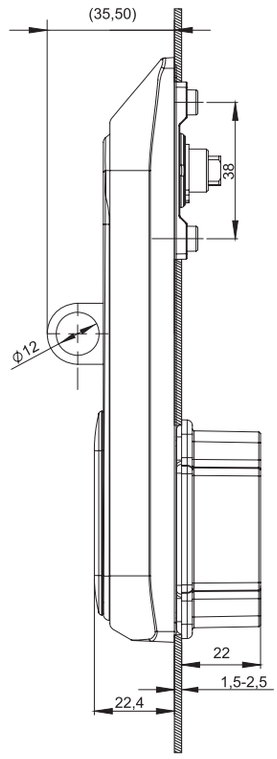

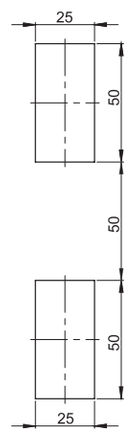

Cut out

Swinghandle in accordance with RC2 ENV 1630 standard

The lock has the **security level** in accordance with **DIN EN 50102**

The handle and housing **resistant to strain**.

Lock has a protection class IP 65

Lock from material ZAMAK 5

Patented insert to order separately, check pg. 1C-1, 1C-2

TYPE OF LOCK	VERSION	COMPONENTS	MATERIAL	FINISH [C]
				RAL 9005
RS980.N	For a cap	Housing, Handle, Sliding dust cover	ZAMAK	04
RS980/U.N		Housing, Handle, Sliding dust cover, Padlock device		
RS980.M	For a cogwheel mechanism	Housing, Handle, Sliding dust cover	ZAMAK	04
RS980/U.M		Housing, Handle, Sliding dust cover, Padlock device		

How to order : RS980.M — [C]

Type of lock

Finish

All components to order separately for version under a cap and a cogwheel mechanism are shown check pg. 1C-30 - 1C-32

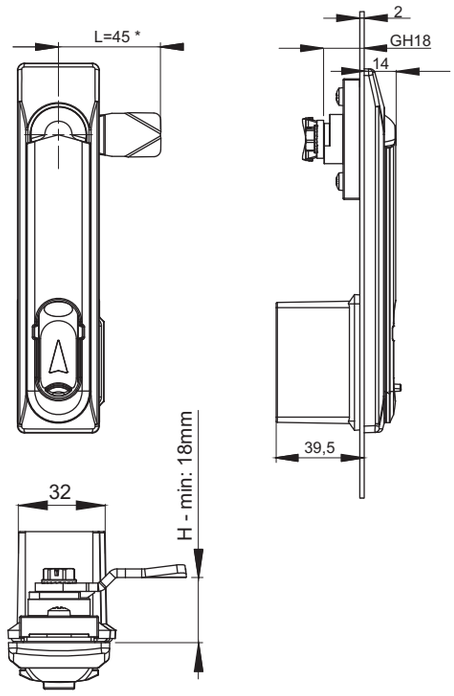

Mounting hole

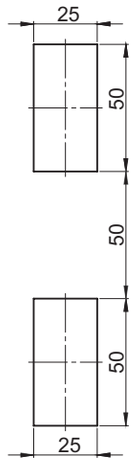

Version **N**

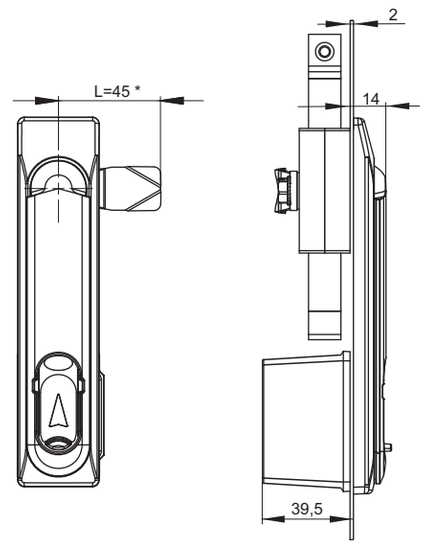

Version **M**

Type of lock RS950		
	Cap	RS950.N
	Rod control	RS950.M

TYPE OF LOCK	COMPONENTS	MATERIAL	FINISH [C]
			RAL9005
RS950	Body, Handle	ZAMAK5	04

How to order : **RS950.N** — **[C]**

Type of lock

Finish

Swinghandle RS160

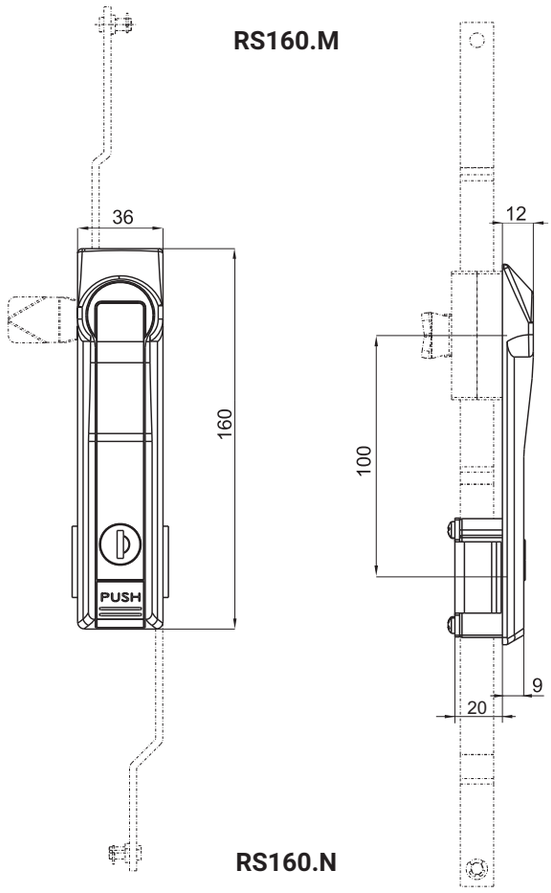

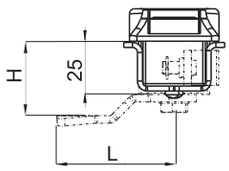

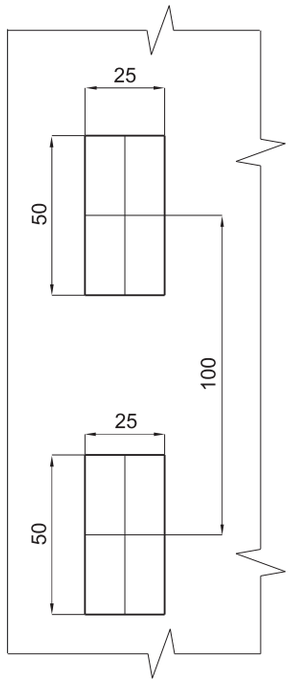

Mounting hole

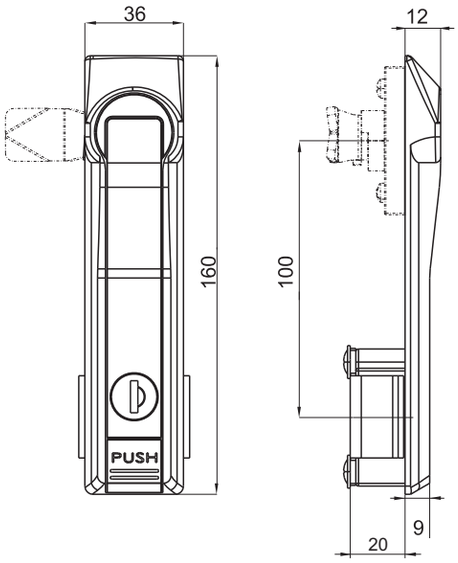

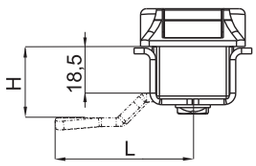

TYPE OF LOCK	COMPONENTS	MATERIAL	FINISH [C]	
			Chrome	RAL 9005
RS160.N RS160.M	Body	Polyamide	-	07
	Handle	ZAMAK5	01	04

How to order :

RS160.N — [C] — [C]

Type of lock

Finish body

Finish handle

RS161.N **RS161.M**

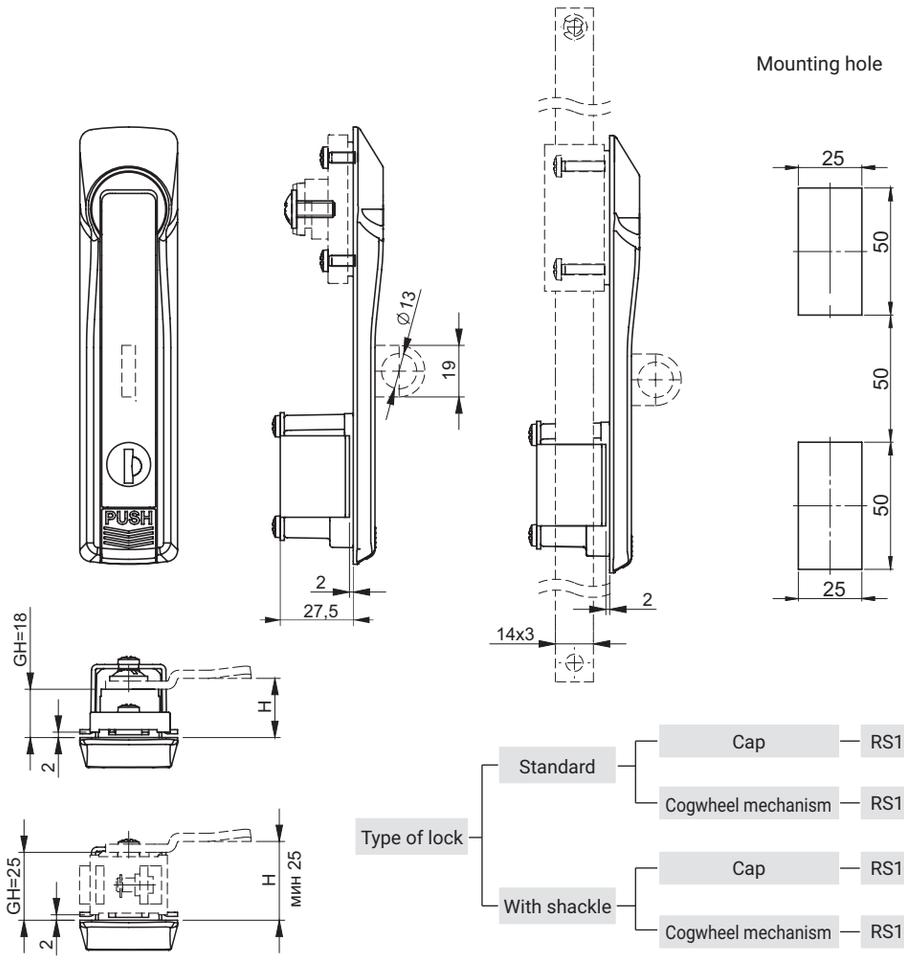

Standard version

Version with shackle

- Type of lock
  - Standard
    - Cap — RS161.N.001
    - Cogwheel mechanism — RS161.M.002
  - With shackle
    - Cap — RS161.N.101
    - Cogwheel mechanism — RS161.M.102

COMPONENTS	MATERIAL	FINISH [C]			LOCK CYLINDER	
		CHROME	RAL 9005	CHROME SATYNA	KEY CODE	
Body	ZAMAK5	01	04	09	Different code RK	1333
Handle		01	04	09		
Clamp*	Steel	Ocynk galwaniczny				

How to order: **RS161.M.101** — **RK** — **[C]** — **[C]**

- Type of lock
- Type of insert
- Housing finish
- Handle finish

Additional components ordered seperately check page:
- Cap 1C.902.001.....pg: 1C-27,
- Cogwheel mechanism MZ2, MZ3.....pg: 1C-30 to 1C-33,
- Cam adapter 1C.903.001.....pg: 1C-27,
- 1 point cam (group: 11, 13).....pg: 1C-10, 1C-11,
- Rods.....pg: 1C-4, 1C-5, 1C-7
- Flat rods.....pg: 1C-34 to 1C-40

Notes:
Lock RS161MZ is compatible with coghweel mechanism MZ2 and MZ3.
While using 1 point cam with coghweel mechanism ordering can adapter (1C.903.001) (pg 1C-27) and screw M6X23 is a necessity.
* Stainless steel available.

Swinghandle RS174, RS175

RS174.001

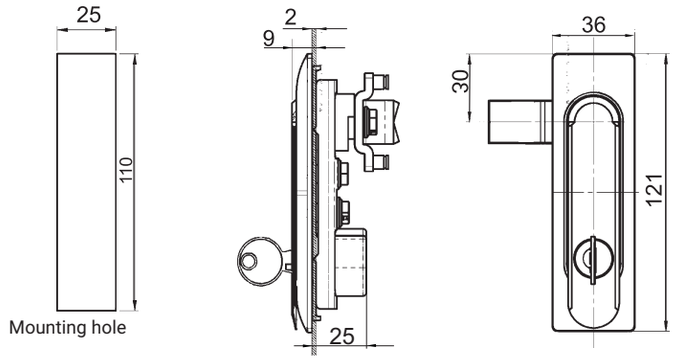

RS174.002

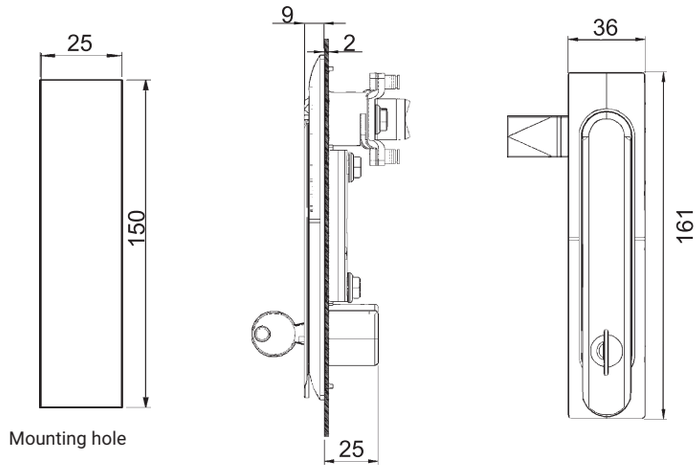

RS175.001

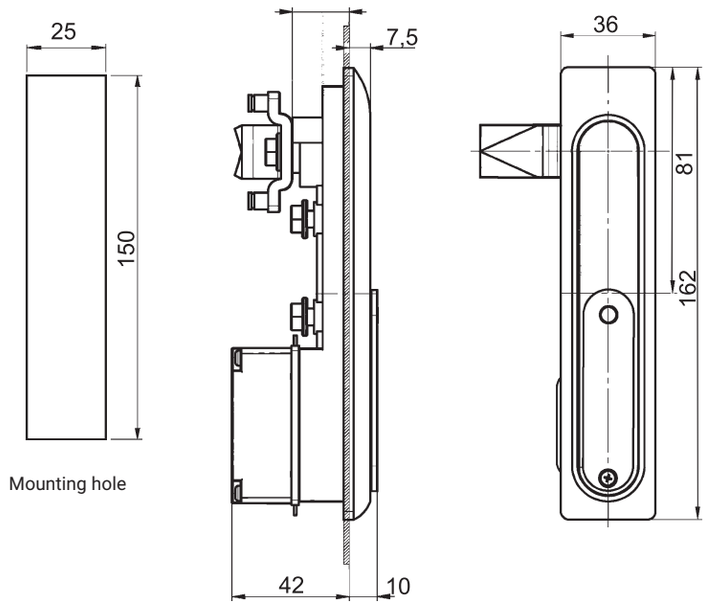

TYPE OF LOCK	COMPONENTS	MATERIAL	FINISH [C]
			RAL 9005
RS174.001 RS174.002 RS175.001	Body, Handle	ZAMAK	04

How to order : RS174.002 — [C]

Type of lock

Finish

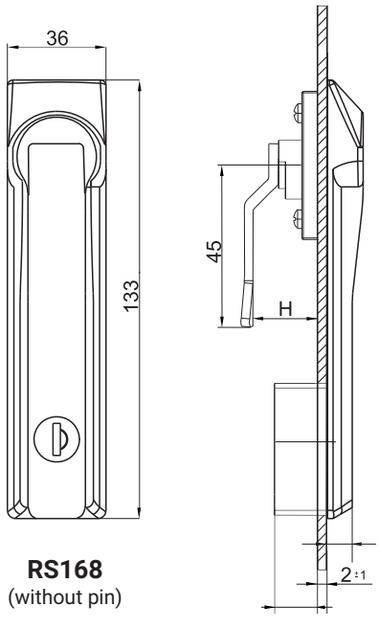

RS168
(without pin)

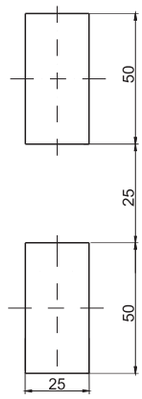

Mounting hole

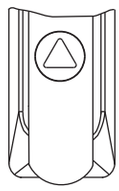

Version B

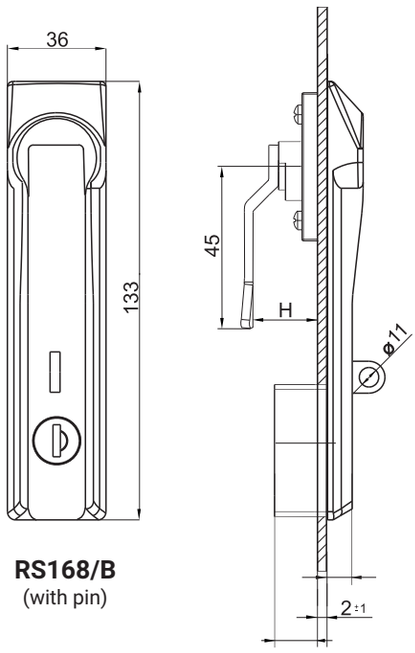

RS168/B
(with pin)

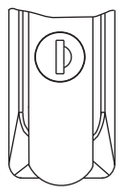

Version A

TYPE OF LOCK	COMPONENTS	MATERIAL	VERSION		FINISH [C]
					RAL 9005
RS168 **RS168B**	Body, Handle	ZAMAK	A	B	04

How to order : **RS168** — **A** — **[C]**

Type of lock
Lock version
Finish

Swinghandle RS169, RS170

ROZTOCZE

RS170

RS169/B

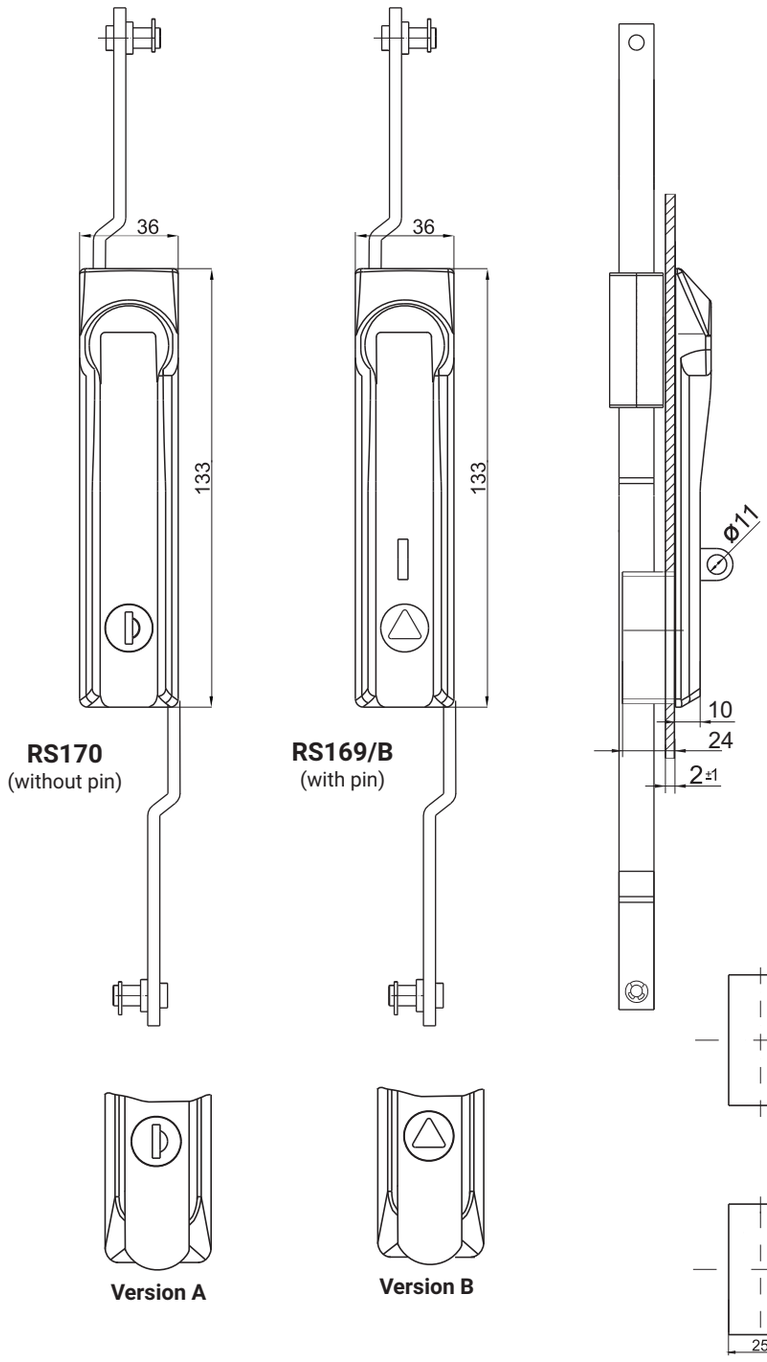

TYPE OF LOCK	COMPONENTS	MATERIAL	VERSION		FINISH [C]
					RAL 9005
RS169B RS170	Body, Handle	ZAMAK	A	B	04

How to order : RS169/B — A — [C]

Type of lock

Lock version

Finish

RS151.N **RS152.N**

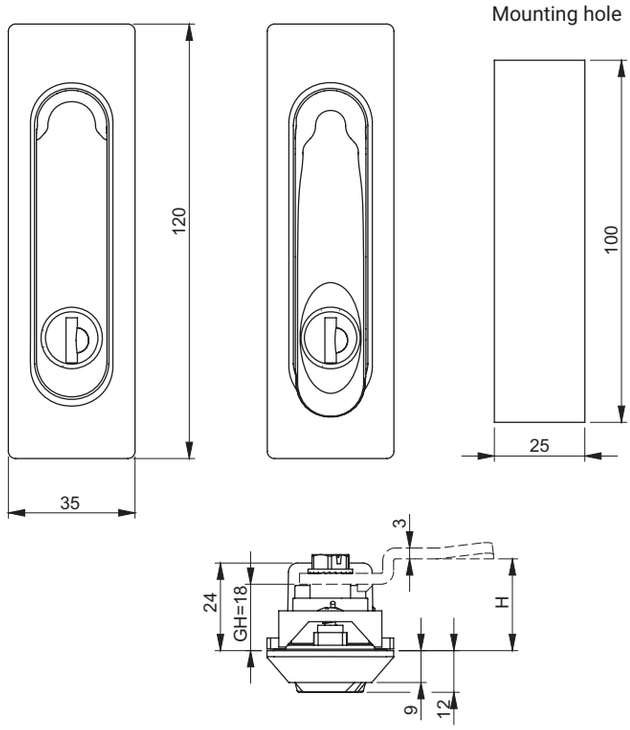

RS151N.001 RS151N.002

RS152N.001 RS152N.002

- Type of lock
  - RS151N
    - RS151N.001
    - RS151N.002
  - RS152N
    - RS152N.001
    - RS152N.002

COMPONENTS	MATERIAL	FINISH [C]			LOCK CYLINDER		SHAPED INSERT	
		CHROME	RAL 9005	RAL 7035				
Body	PA6 GF30	-	07	08	KEY CODE		INSERT	
Handle RS151	PA6 GF30	-	07	08	Different code RK	1333	T9	KW8
Handle RS152	ZAMAK	01	04	05				
Cam adapter 1C.903.003	ZAMAK	-	-	-				
Cap 1C.902.005	PA6 GF30	-	07	-				
Mounting components	Steel zinc plated							

How to order:

RS152.N.001 — **1333** — **[C]** — **[C]**

- Type of lock
- Type of insert
- Finish body
- Finish handle

All necessery components are attached with a set.
For locks RS151N and RS152N CAMS to be ordered seperately:
- 1 point cam (group: 11, 13).....pg: 1C-10, 1C-11

Swinghandle RS151N, RS152N

Mounting method .001

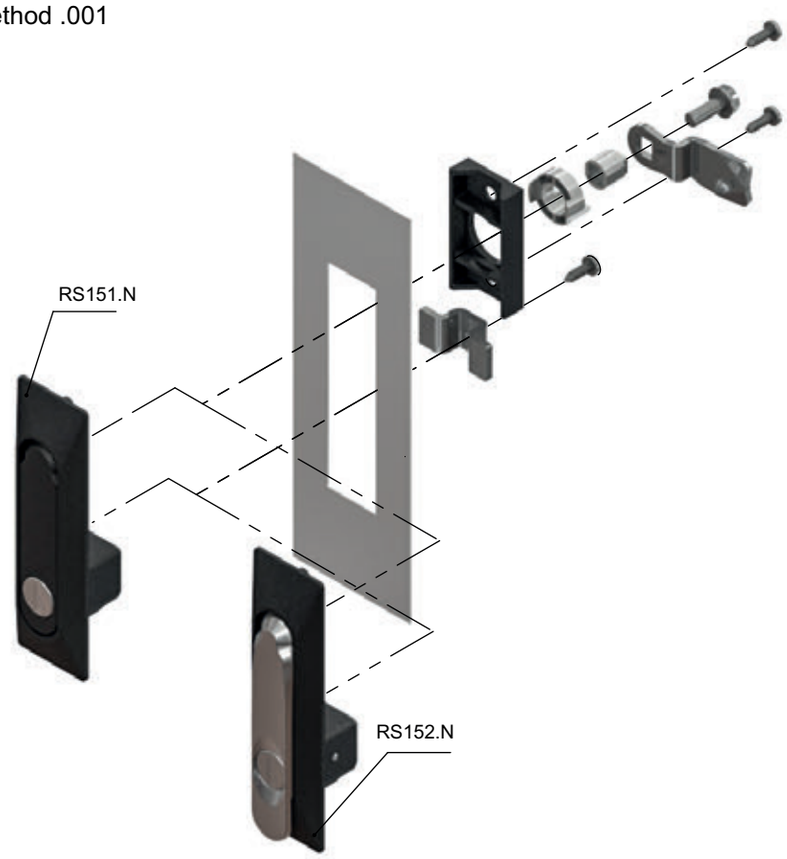

Mounting method .002

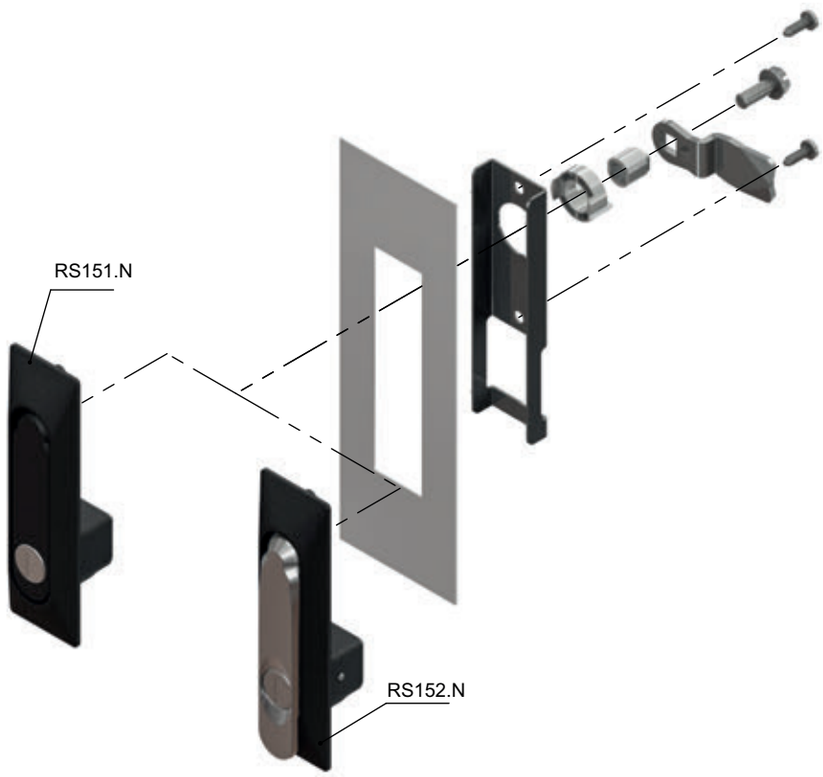

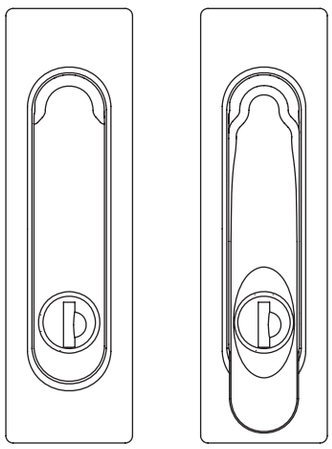

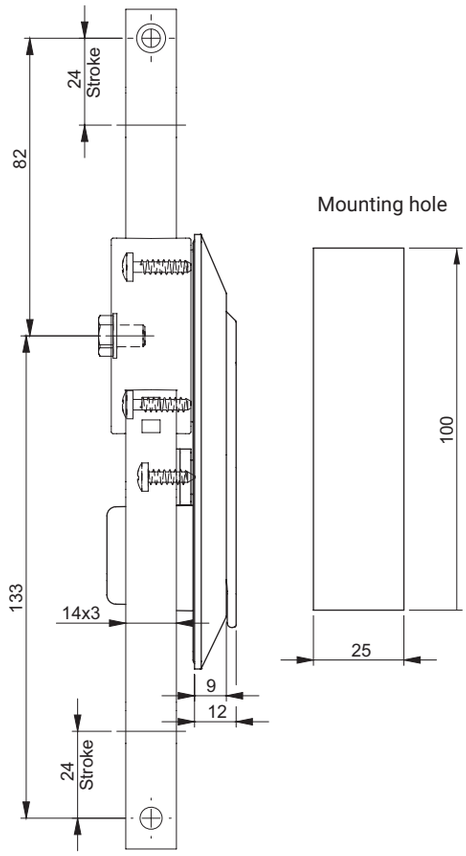

RS151.M RS152.M

Type of lock — RS151.M / RS152.M

COMPONENTS	MATERIAL	FINISH [C]			CYLINDER LOCK		SHAPED INSERT	
		CHROME	RAL 9005	RAL 7035				
Body	PA6 GF30	-	07	08	KEY CODE		INSERT	
Handle RS151	PA6 GF30	-	07	08	Different code RK	1333	T9	KW8
Handle RS152	ZAMAK	01	04	05				
Cap MZ	PA6 GF30	-	07	-				
Tie-rod MZ	Steel zink plated							
Mounting components	Steel zink plated							

How to order: RS152.M — 1333 — [C] — [C]

- Type of lock
- Type of insert / Key code
- Body finish
- Handle finish

All necessery components are attached with a set.
Additional components ordered seperately check page:
- Rods.....pg: 1C-4, 1C-5, 1C-7
- Flat rods.....pg: 1C-34 TO 1C-40.

* Chrome finish available only for RS152.N (metal handle-ZAMAK5).

Lock RW100, RW110

ROZTOCZE

RW100.N

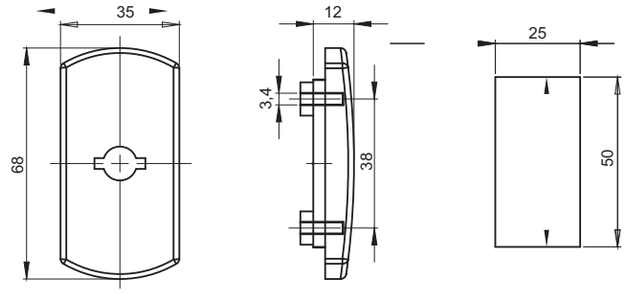

RW100.N
(Used with **Cap**)

RW100.M
(Used with **Cogwheel mechanism**)

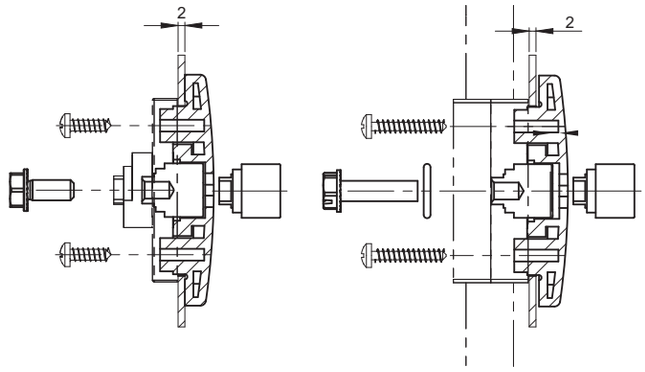

RW110.N

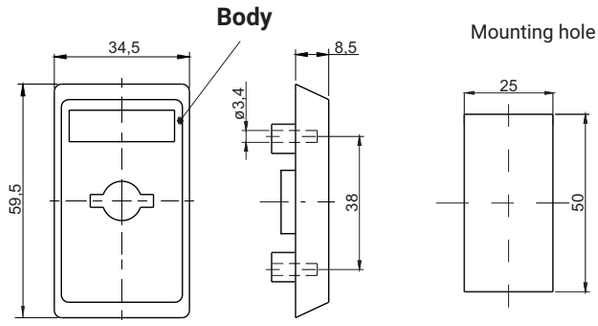

RW110.N ...
(Used with **Cap**)

RW110.M ...
(Used with **Cogwheel mechanism**)

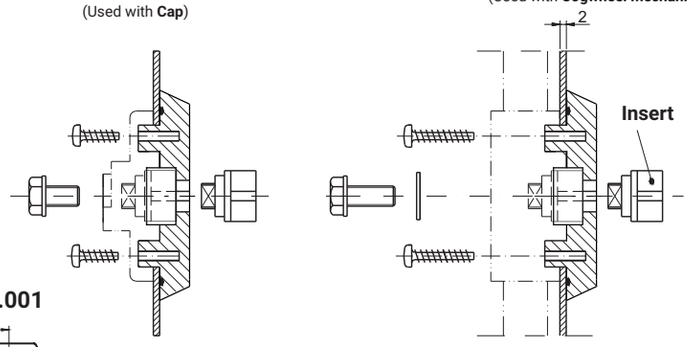

1C.912.001

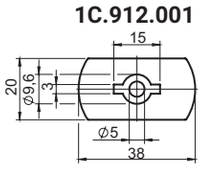

Protective cover compatible with locks: RW100, RW110, RW400

NOTE:
Additional components of locks:
RW100.N, RW100.M, RW110.N, RW110.M,
on pages: 1A-5, 1A-6.

TYPE OF LOCK	COMPONENTS	MATERIAL	FINISH [C]
			RAL 9005
RW100.N, RW100.M RW110.N, RW110.M	Body	Polyamide PA6 GF30	07
1C.912.001	Protective cover	Polyamide	07

How to order : **RW110.N** — **[C]**
Type of lock
Finish

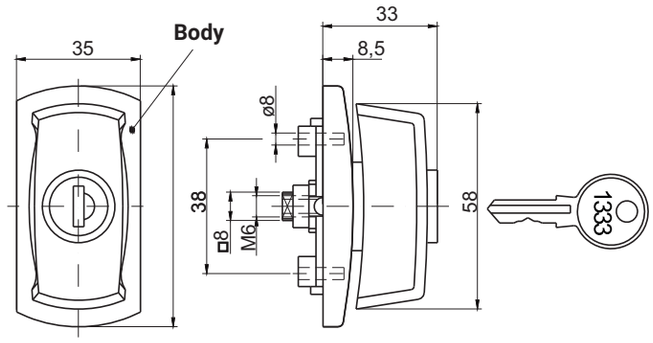

RW200.N ...
(Used with **Cap**)

RW200.M ...
(Used with **Cogwheel mechanism**)

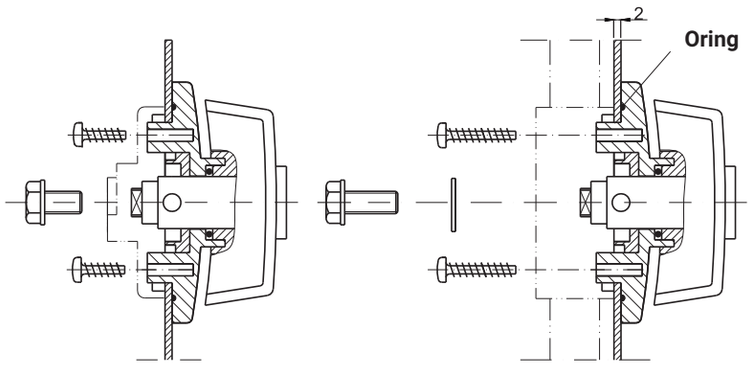

NOTE:
Additional components of locks:
RW200.N, RW200.M,
on pages: 1A-5, 1A-6.

TYPE OF LOCK	COMPONENTS	MATERIAL	FINISH [C]
			RAL 9005
RW200.N **RW200.M**	Body	Polyamide PA6 GF30	07

How to order :
Type of lock — **RW110.N**
Finish — **[C]**

WING-KNOB LOCK RW500

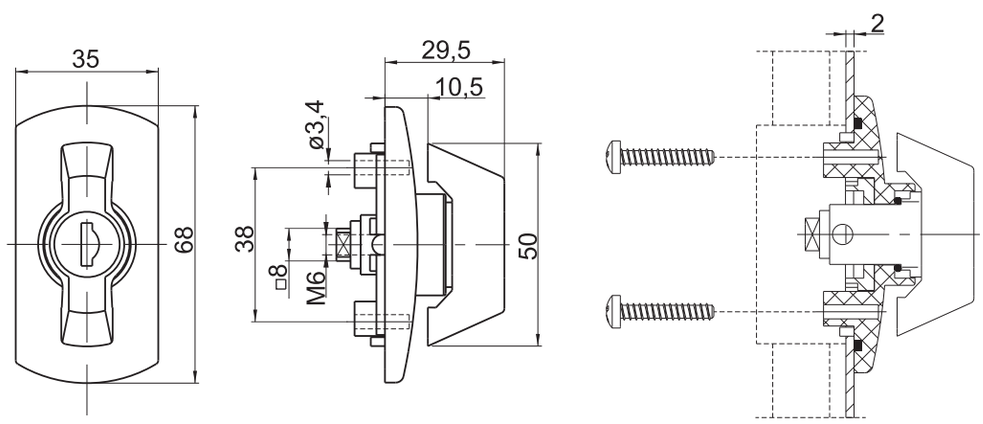

TYPE OF LOCK			COMPONENTS	MATERIAL	FINISH [C]
Insert code1333	Different code	No insert			RAL 9005
1B.RW500.001	**1B.RW500.002**	**1B.RW500.003**	Body	Polyamide PA6 GF30	07
			Knob	ZAMAK	04

Locking mechanism for passive doors MZ1-DB.002, MZ1K-DB.002, MZ1P-DB.002

ROZTOCZE

MZ1-DB.002, MZ1K-DB.002, MZ1P-DB.002

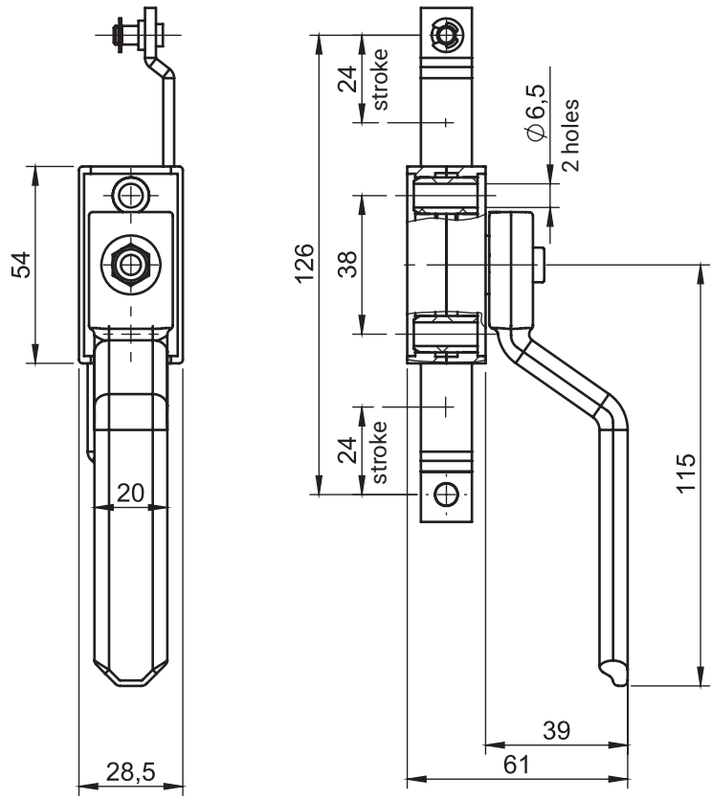

Flat Rod, page 1C-34 - 1C-40

Rod guide P314, page 1C-8

CATALOGUE NUMBER	VERSION	COMPONENTS	MATERIAL
MZ1-DB.002	Retaining washers protection	The body of the mechanizm Tie-rod Inner handle	ZAMAK Stal ocynkowana Poliamid
MZ1K-DB.002	Square protection		
MZ1P-DB.002	Shape protection		

T-HANDLE LOCK RW510

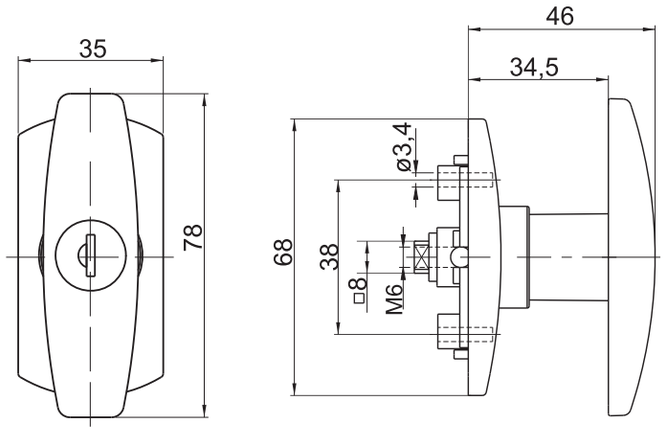

TYPE OF LOCK			COMPONENTS	MATERIAL	FINISH [C]
Insert code1333	Different code	No insert			RAL 9005
1B.RW510.001	1B.RW510.002	1B.RW510.003	Body	Polyamide PA6 GF30	07
			Handle T	ZAMAK	04

How to order : **1B.RW510.001** — **[C]**

Type of lock

Finish

L-HANDLE LOCK RW520

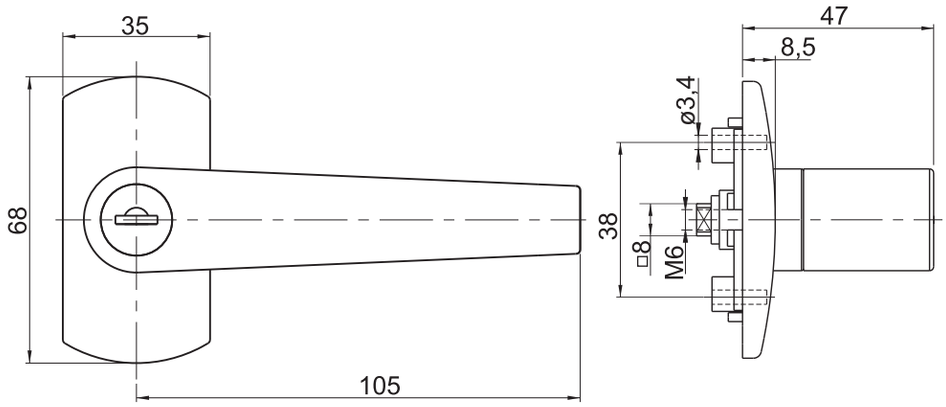

TYPE OF LOCK			COMPONENTS	MATERIAL	FINISH [C]
Insert code1333	Different code	No insert			RAL 9005
1B.RW520.001	1B.RW520.002	1B.RW520.003	Body	Polyamide PA6 GF30	07
			Handle L	ZAMAK	04

Internal lock for passive door

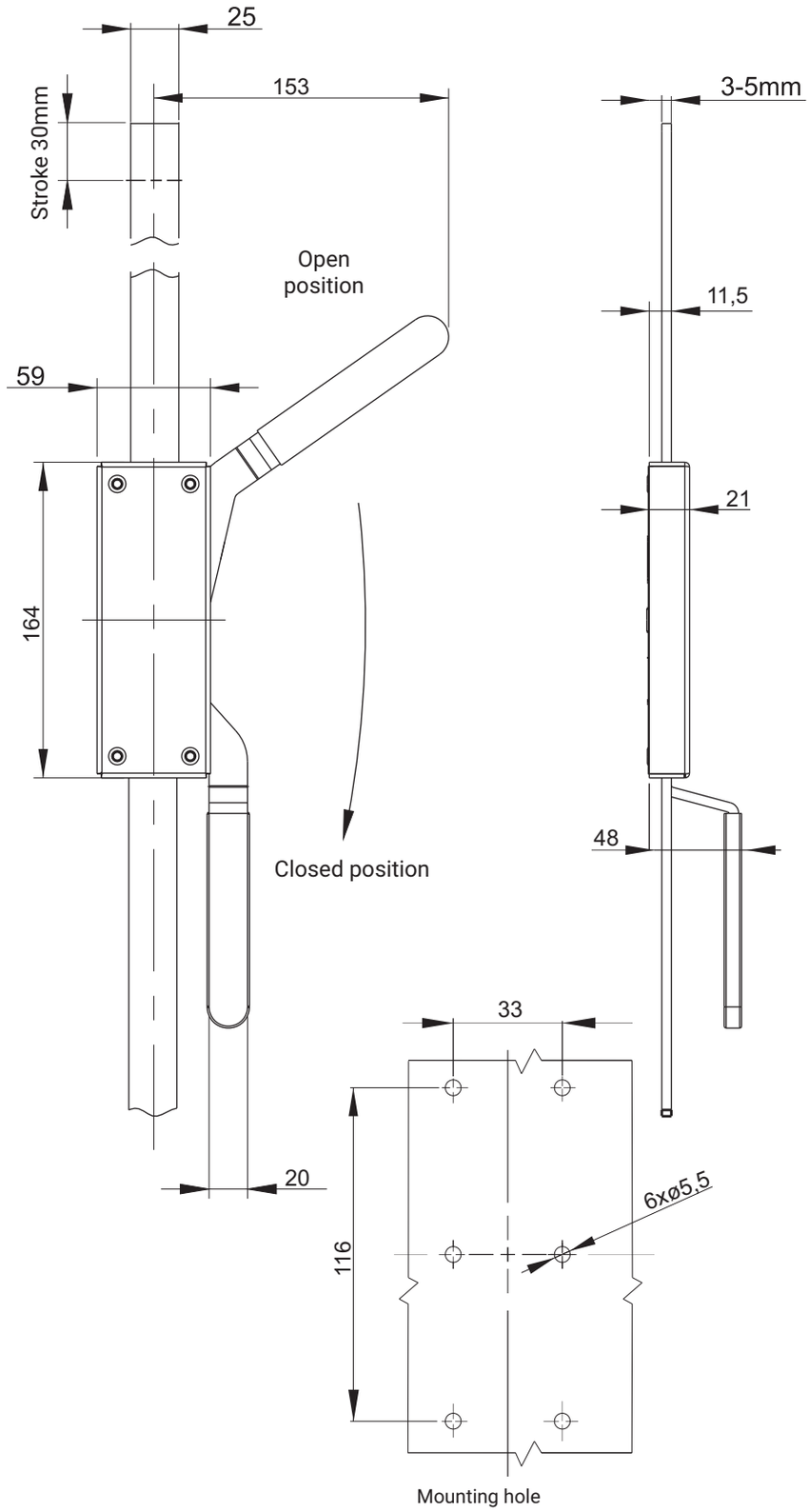

NOTE: Posibility of ordering lock with locking rods

CAT. NUMBER	NAME	MATERIAL
1B.530.001 - Right	Internal Lock ZWDB	Steel zinc plated
1B.530.002 - Left		

ZWA1 lock driven by a swinghandle

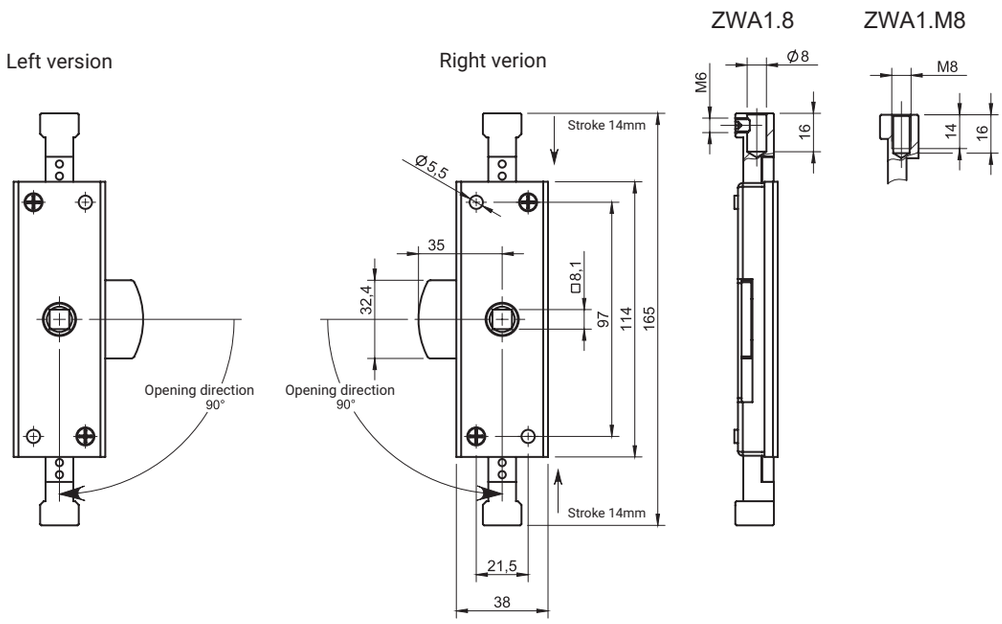

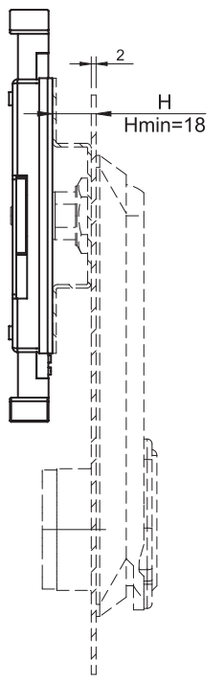

Left version

Right version

Lock ZWA1 works with the swinghandle RS130, page 1B-8 and with the swinghandle RS200, page 1B-3.
When ordering the RS lock to cooperate with the ZWA1 lock, add the end of ZWA1 to the catalogue number of the RS lock

CAT. NUMBER	VERSION	METHOD OF ATTACHING THE ROD	MATERIAL
1B.ZWA1.8.101	Right	Hole ø8	Steel zinc plated
1B.ZWA1.M8.101		Threaded hole m8	
1B.ZWA1.8.102	Left	Hole ø8	
1B.ZWA1.M8.102		Threaded hole m8	

Lock ZWA2

ZWA2 lock driven by a quarter turn lock

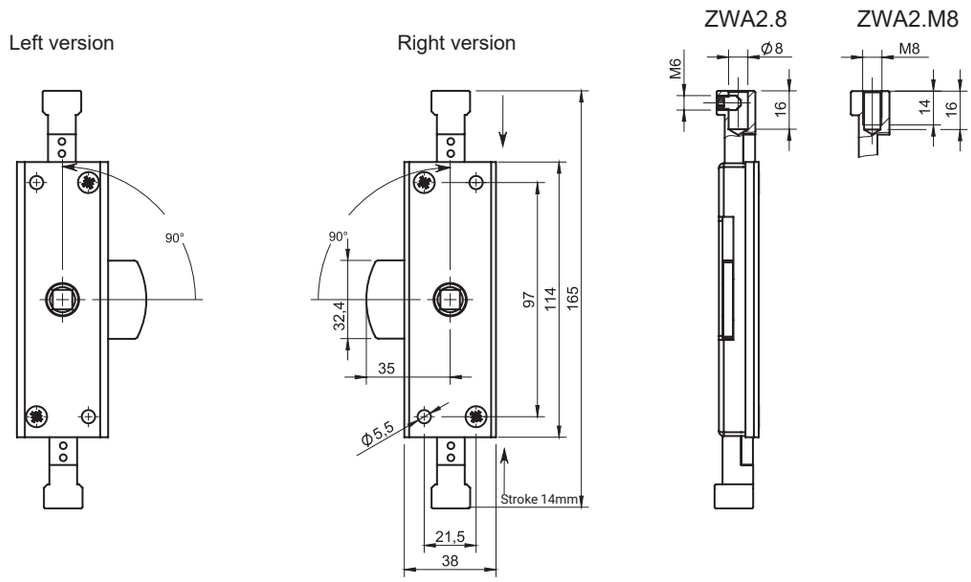

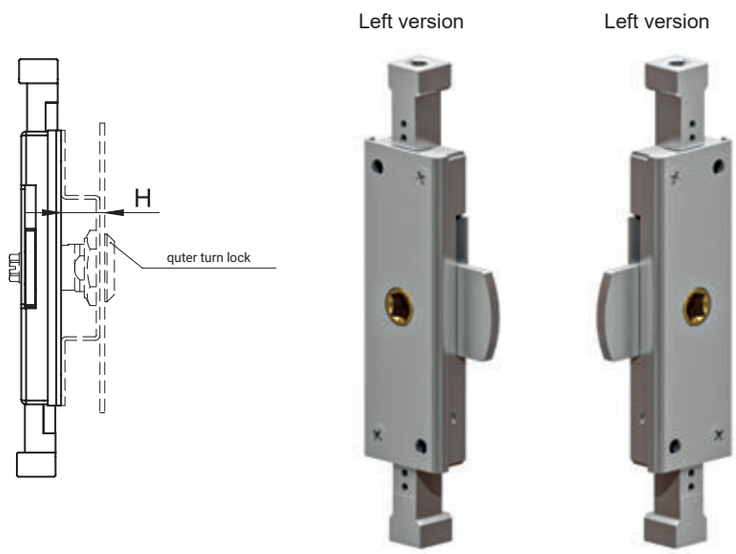

ZWA2 lock works with quarter turn locks M22-2, M22-30, M22-40, M22-60, 2.L, 2.T, 2.PM.
The height H is equal to the height GH of the lock used.
When ordering a quarter turn lock which is to cooperate with the ZWA2 lock, the ZWA2 end-piece should be added to the catalogue number of the lock.

DRIVE LOCK	HEIGHT H [mm]
M22-3, 2.L18, 2.T18, 2.PM18	18
M22-30, 2.L30, 2.T30 2.PM30	30
M22-40, 2.L40, 2.T40, 2.PM40	40
M22-60, 2.L60, 2.T60, 2.PM60	60

CAT. NUMBER	VERSION	METHOD OF ATTACHING THE ROD	MATERIAL
1B.ZWA2.8.201	Right	Hole ø8	Steel zinc plated
1B.ZWA2.M8.201		Threaded hole m8	
1B.ZWA2.8.202	Left	Hole ø8	
1B.ZWA2.M8.202		Threaded hole m8	

Lever Lock 1B.ZD100

NEW

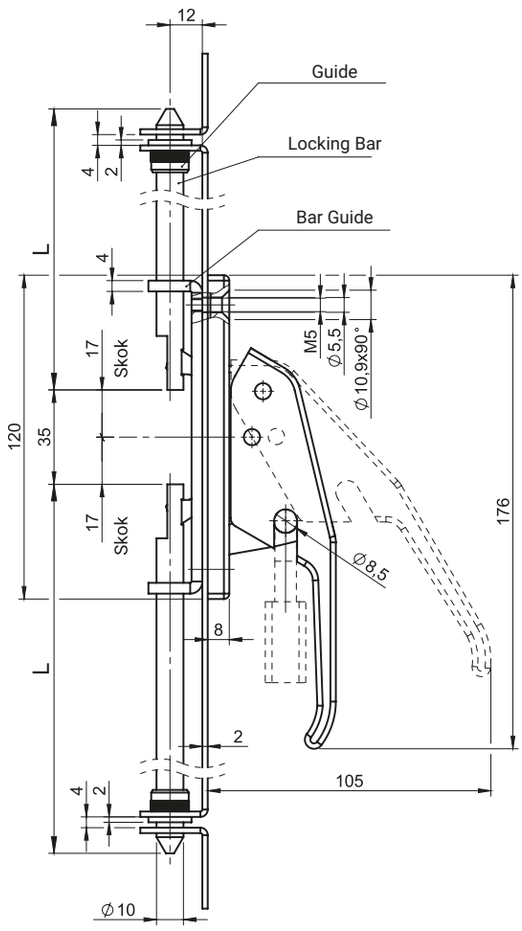

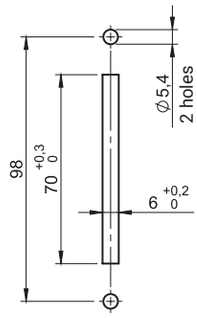

Lever Lock mounting hole

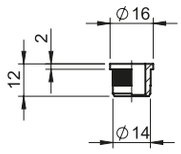

Guide mounting hole

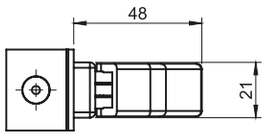

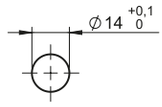

Guide

CATALOGUE NUMBER	COMPONENTS	MATERIAL	FINISH [C]
			RAL 9005
1B.ZD100.001	Lever Lock	Aluminum	04
	Bar Guide	Zinc plated steel	-
1B.ZD100.001.06	Locking Bar ø 10	Zinc plated steel	-
1B.ZD100.001.07	Guide	Brass	-

When ordering the locking bar 1B.ZD100.001.06 please specify the length L.

ROZTOCZE

The lock cylinder with radial pins type WCM

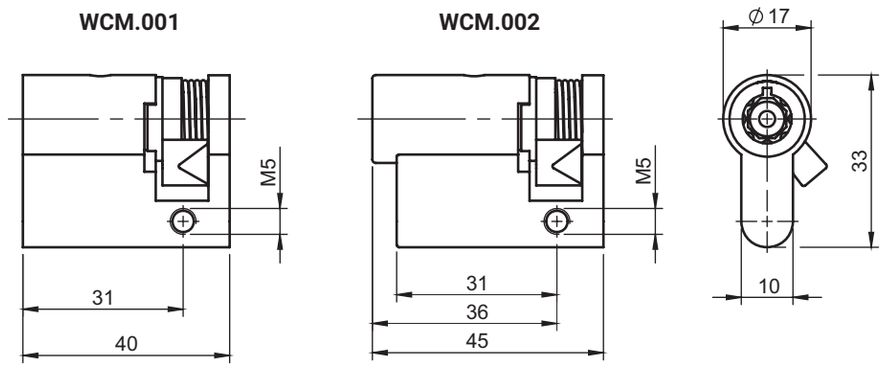

The key can be removed only from the locked position

CATALOGUE NO.	KEY TYPE	MATERIAL
WRS-WCM.001	WCM	ZAMAK
WRS-WCM.002		

SHAPED INSERT LATCHING

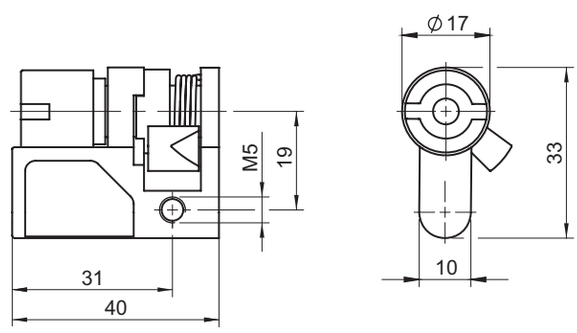

TYPE OF INSERT [X]														
D3	D5	T6	T7	T9	T10	T13i	KW6	KW7	KW8	S	N	C9	L	D13

CATALOGUE NO.	MATERIAL	FINISH [C]	
		Nickel	Galvanized
WRS-X	ZAMAK	02	03

How to order:

WRS — D5 — [C]

- Type of lock
- Type of insert
- Finish

LOCK CYLINDER
WRS-B.001

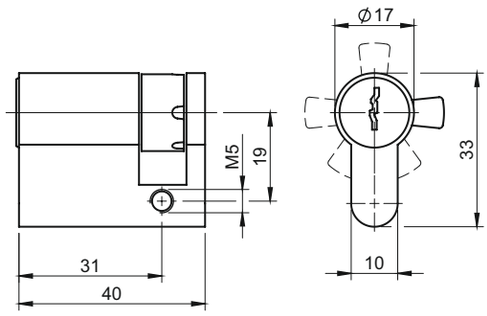

NOTE:
Profile cylinder can be ordered with one or different key codes.

SELF-LOCKING CYLINDER
WRS-P.001

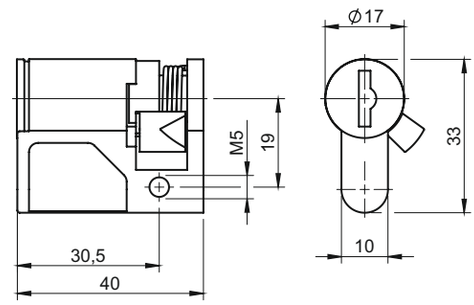

NOTE:
Profile cylinder can be ordered with one or different key codes.

CAT. NUMBER	KEY CODE	MATERIAL	FINISH [C]
WRS-B.001 - JK	Key alike	Brass	-
WRS-B.001 - RK	Different code		
WRS-P.001 - 1333	Code 1333	ZAMAK	Nickel
WRS-P.002 - 405E	Code 405E		
WRS-P.002 - 455E	Code 455E		
WRS-P.002 - 1242E	Code 1242E		
WRS-P.002 - 2342E	Code 2342E		

Shaped insert rotated by 360°
WRS-360

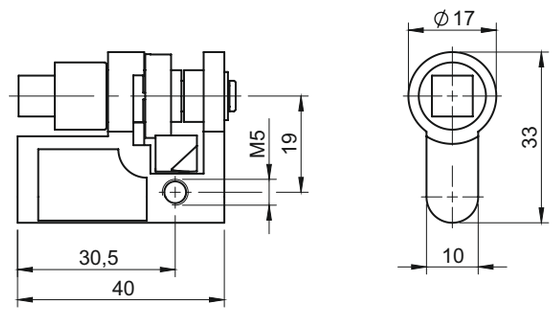

TYPE OF INSERT [X]														
D3	D5	T6	T7	T9	T10	T13i	KW6	KW7	KW8	S	N	C9	L	D13

CATALOGUE NO.	MATERIAL	FINISH [C]	
		Nickel	Galvanized
WRS-360-X	ZAMAK	02	03

How to order:

WRS-360 — D5 — [C]

- Type of lock → WRS-360
- Type of insert → D5
- Finish → [C]

Shape insterts WRS

NEW

Self-locking shaped insert with difficult access
WRS-D13.001 / WRS-D13.002

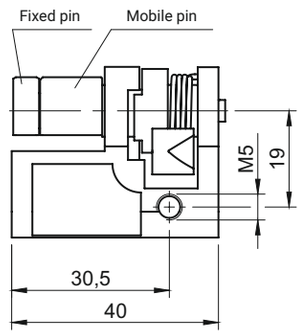

WRS-D13.001

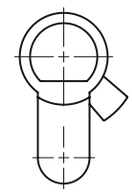

WRS-D13.002

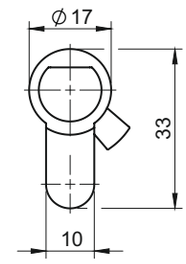

Shaped insert rotaed by 360° with difficult access
WRS-D13.003 / WRS-D13.004

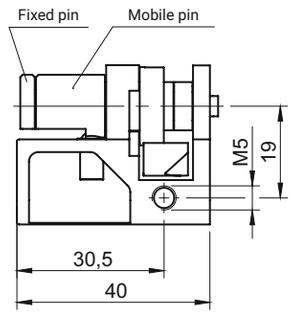

WRS-D13.003

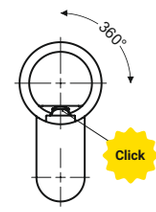

WRS-D13.004

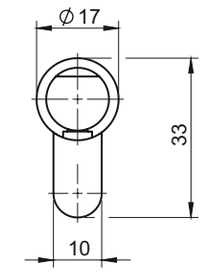

Shaped inserts WRS-D13 are compatible only with specified lock types RS: RS420, RS520, RS420/U, RS520/U.
WRS-D13.003 and WRS-D13.004 allows the key to turn 360°, removing the key is possible only in the open position, open position is sygnalized by a slight click.
Recommended key for cylinders with dificult access - 2.KL-D13S.008 (pg. 2A-115).

CATALOGUE NO.	COMPONENTS	MATERIAL	FINISH [C]
WRS-D13.001	Housing Mobile pin Fixed pin	ZAMAK ZAMAK Steel zinc plated	Nickel - -
WRS-D13.002			
WRS-D13.003	Housing Mobile pin Fixed pin	ZAMAK Brass Steel zinc plated	Nickel - -
WRS-D13.004			

ROD with Cut End
(P26L)

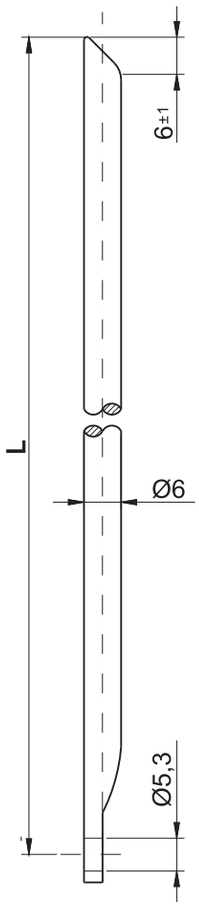

ROD with Pointed End
(P26L)

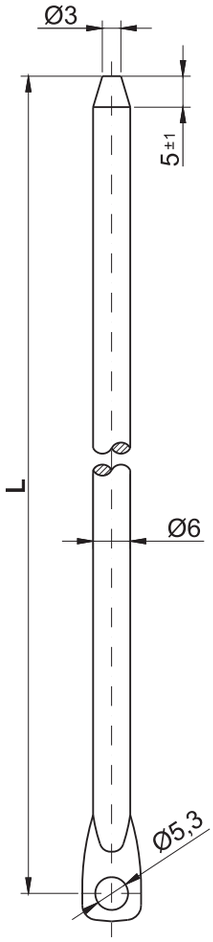

ROD with Pointed End (regulated)
(PR28L)

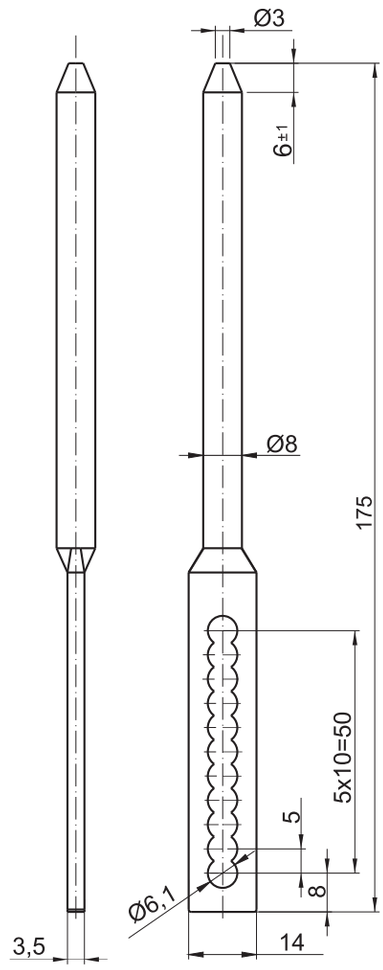

stainless steel

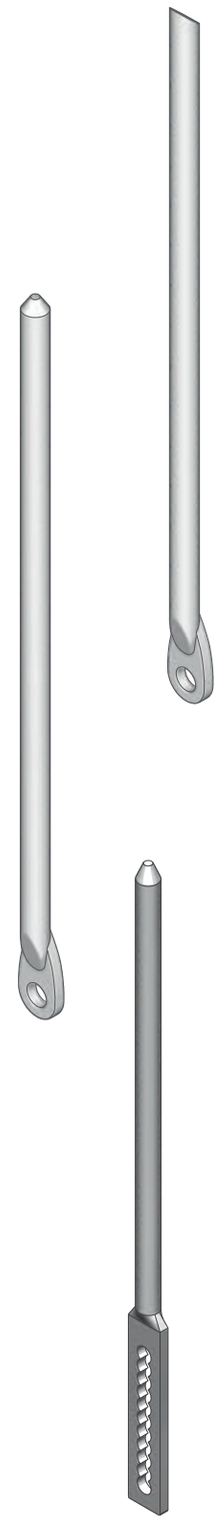

CALCULATING RODS' LENGHT

a) 3- point cam assembled
in the middle of the door:

$$L = \frac{P - 12mm}{2}$$

b) in case, when cam is moved about
dimension A:

L= in calculated like in point a) but:
- upper rod $L_W = L + A$
- lower rod $L_N = L - A$

L - lenght of rod [mm]

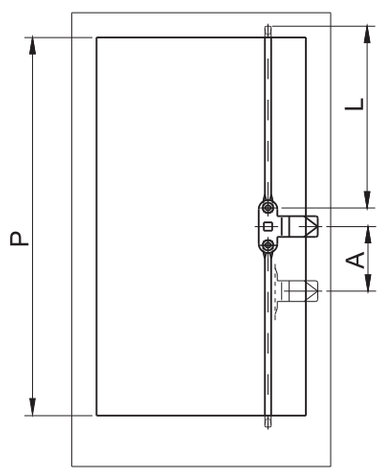

CAT. NUMBER	NAME	MATERIAL
P16 L	Rod with cut end	Steel zinc plated
P26 L	Rod with pointed end	Steel zinc plated
PR28 L	Rod with pointed end (regulated)	Steel zinc plated

Rod Ø8

stainless steel

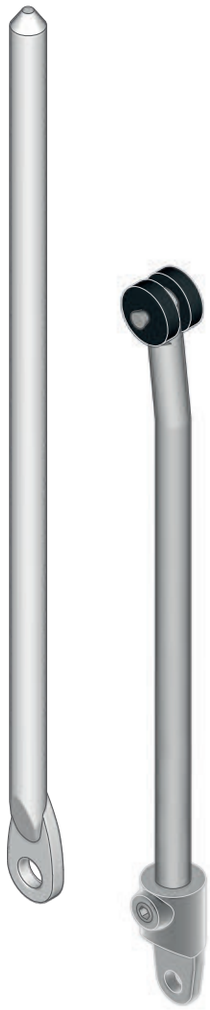

ROD with Rollers (P38 L)

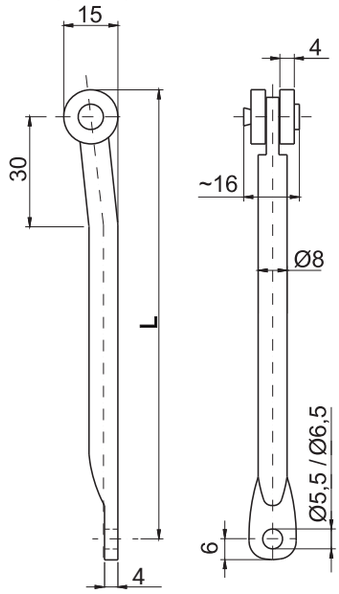

ROD with Flat End *(P48 L)*

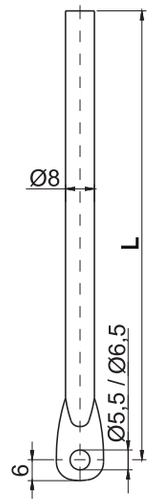

ROD with Pointed End *(P28 L)*

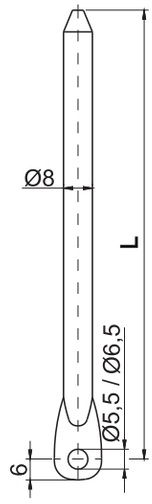

ROD wit Rollers *(P38/U L)*

(used with **Rod Holder**)

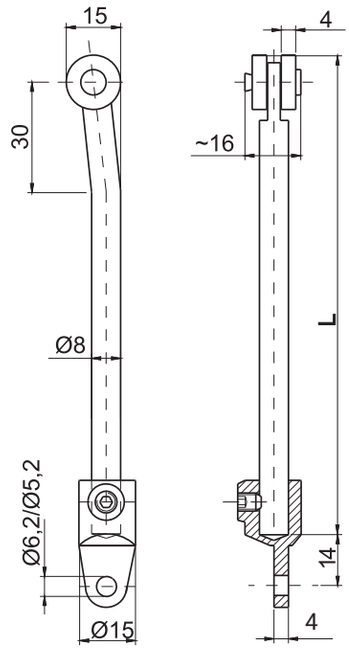

ROD with Flat End *(P48/U L)*

(used with **Rod Holder**)

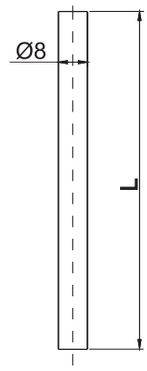

ROD with Pointed End *(P28/U L)*

(used with **Rod Holder**)

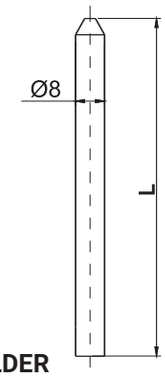

stainless steel

ROD HOLDER

nr 1C.904.051

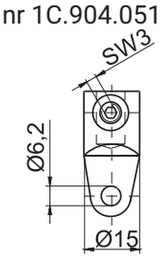

nr 1C.904.050

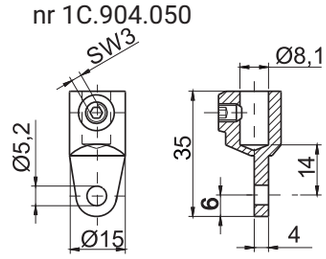

L - lenght of rod [mm]

CAT. NUMBER		NAME	MATERIAL
P28 L		Rod with pointed end	Steel zinc plated
P38 L		Rod with rollers	Steel zinc plated, rollers-PA6
P48 L		Rod with flat end	Steel zinc plated
P28/U L	Lenght adjustable by Rod holder	Rod with pointed end (adjustable)	Steel zinc plated
P38/U L		Rod with rollers (adjustable)	Steel zinc plated, rollers-PA6
P48/U L		Rod with flat end (adjustable)	Steel zinc plated
1.C.904.051,1C.904.050		Rod holder	ZAMAK - zinc plated
1C.904.052		Rod holder	Stainless Steel

ROD GUIDE ø6 - U

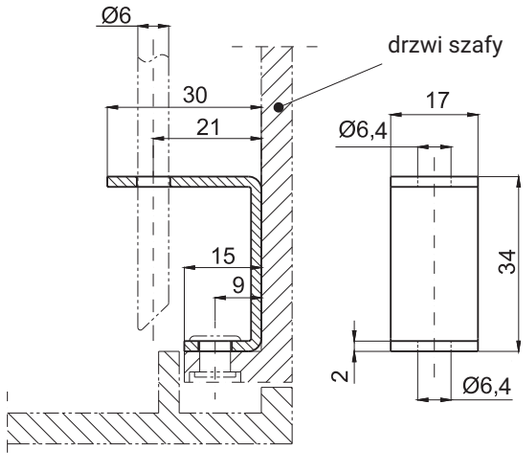

ROD GUIDE ø6 - L

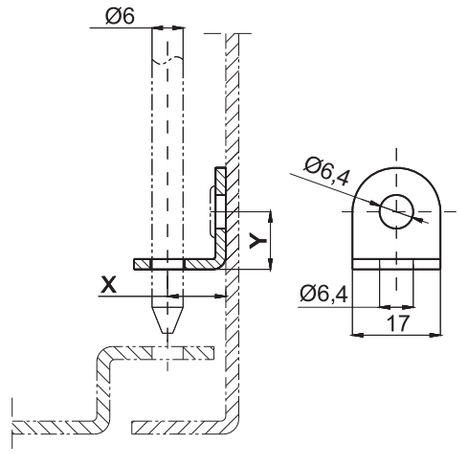

ROD GUIDE ø8

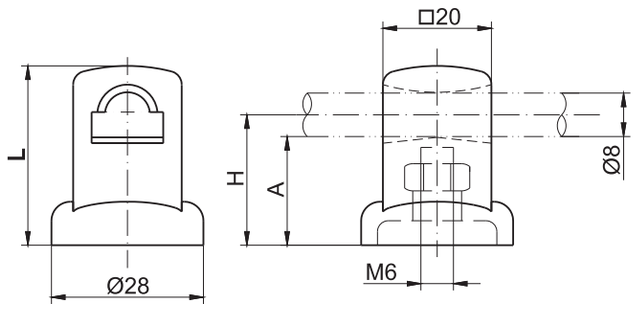

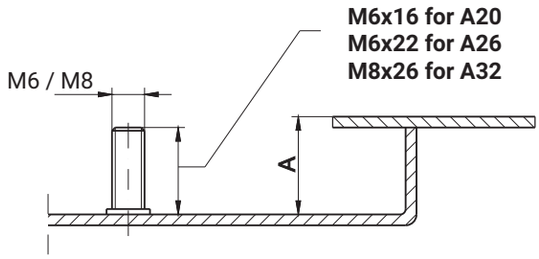

ROD GUIDE RW

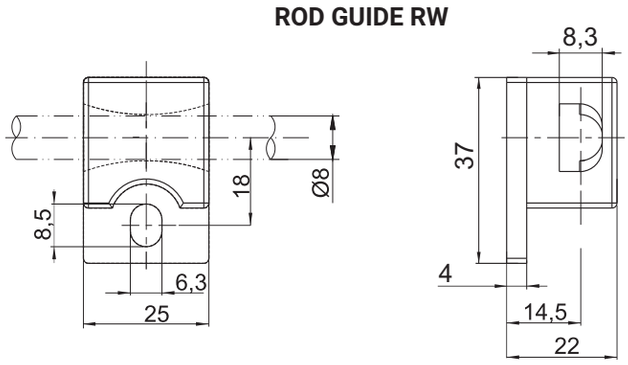

CAT. NUMBER	NAME	DIMENSION ø8, ø6 [mm]					MATERIAL
		A	L	H	X	Y	
1C.906.008	Rod guide ø8	20	33	24	-	-	Pa6 colour RAL 9005
1C.906.009		26	39	30	-	-	
1C.906.010		32	45	36	-	-	
1C.906.002	Rod guide ø6 **L**	-	-	-	11,5	8	Steel zinc plated
1C.906.003		-	-	-	22,5	27	
1C.906.001	Rod guide ø6 **U**						Steel zinc plated
1C.906.013	Rod guide RW						Pa6 colour RAL 9005

Rod guide 1C.906.100

ROZTOCZE

PATENT NEW

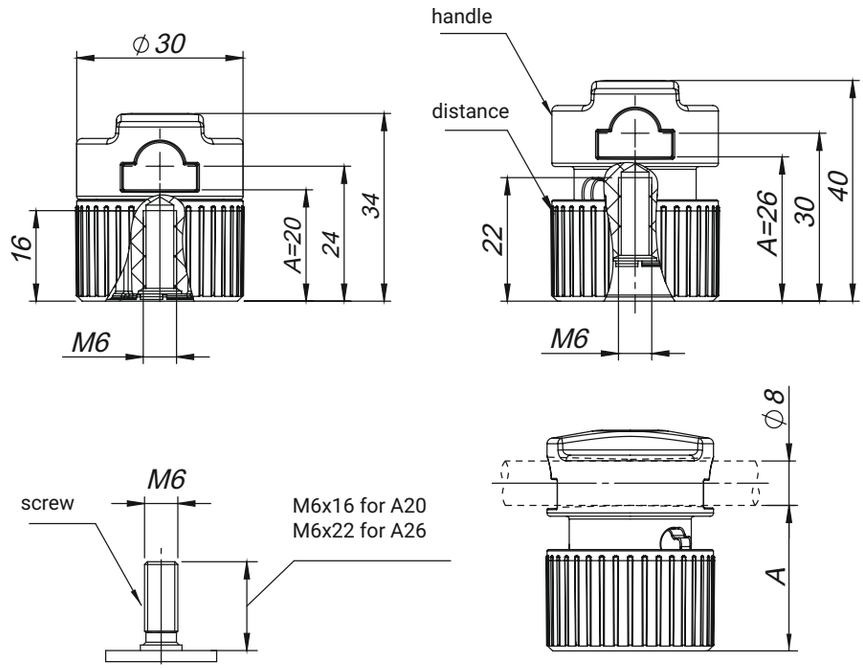

Positions A20 and A26 according to drawing.
To change the position from A20 to A26, rotate the knob in the clockwise or anticlockwise direction relative to the distance until the knob can turn no further.
Change the position of the guide from position A20 to A26 after removing the guide from the rod.
It is possible to use one type of M6x16 stud for both versions of the rod guide.

Tensile Strength [kg]			Tightening Torque
Screw length L	A20	A26	
L=16mm	500	400	to 2Nm
L=22mm	-	500	

CATALOGUE NO.	DETAL	MATERIAL	FINISH [C]
			RAL 9005
1C.906.100	Rod guide ø 8	Polyadmide PA GF30	07

1C.906.012

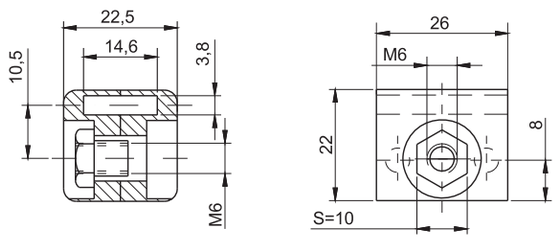

1C.906.014

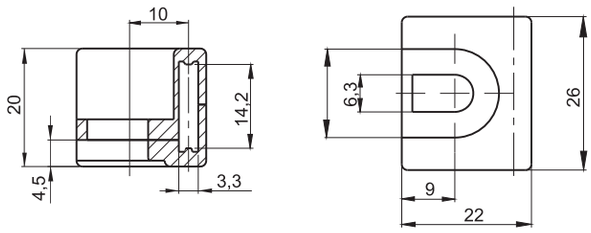

1C.906.015

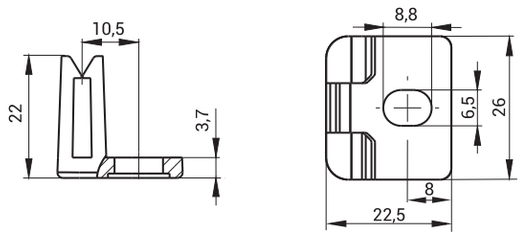

1C.906.018

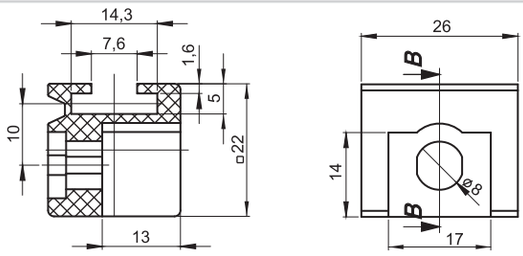

1C.906.019

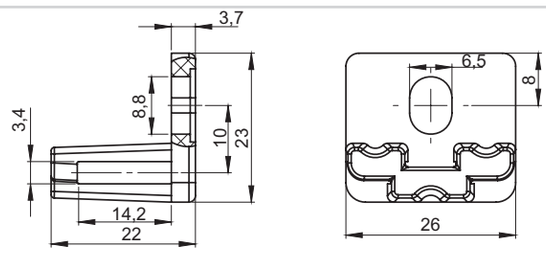

1C.906.020

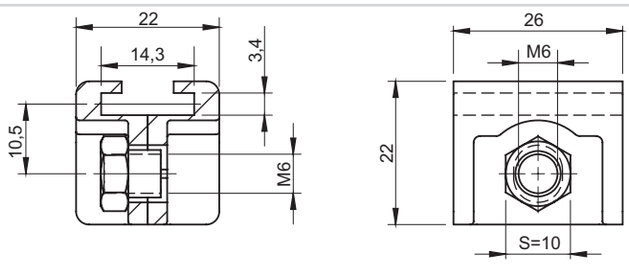

CAT. NUMBER	NAME	COMPONENTS	MATERIAL
1C.906.012	Rod guide P314	Rod guide P314	PA6 colour RAL 9005
		Nut	Steel zinc plated
1C.906.014	Rod guide P314 ver. 2	Rod guide P314 ver. 2	PA6 colour RAL 9005
1C.906.015	Rod guide P314	Rod guide	PA6 colour RAL 9005
1C.906.018	Rod guide P314 ver. 3	Rod guide P314 ver. 3	PA6 colour RAL 9005
1C.906.019	Rod guide P314	Rod guide	PA6 colour RAL 9005
1C.906.020	Rod guide P314 SN	Rod guide, Nut	Stainless Steel 316

GH - height body
H - height locking
h - heihgt cam
L - lenght cam
g - thickness cam

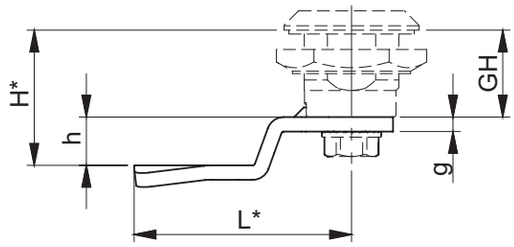

1-point cam with limiter

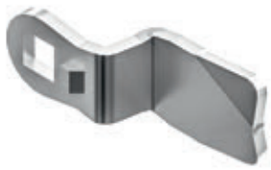

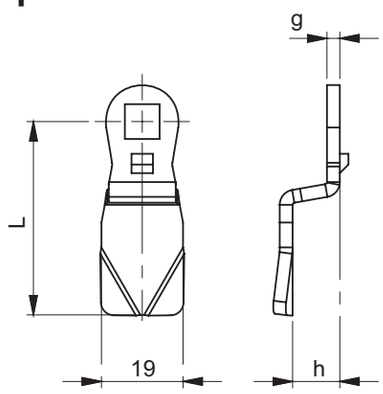

1-point cam without limiter

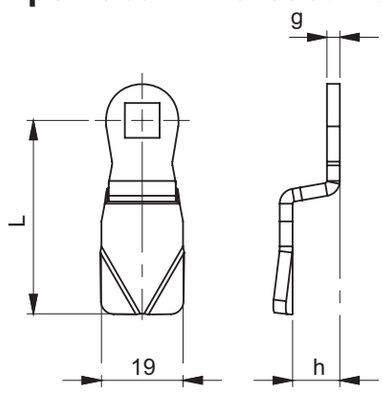

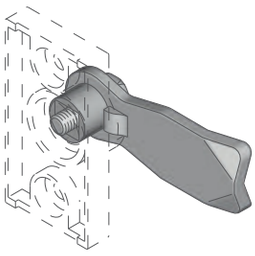

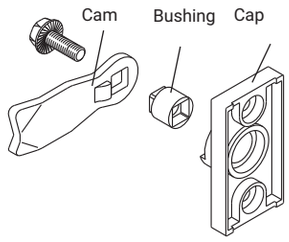

NOTE:
When ordering 1-point cam with limiter for Cap, you must order bushing, page. 1C-27

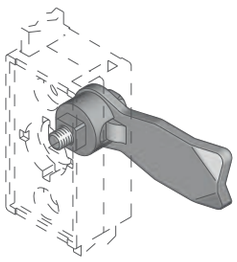

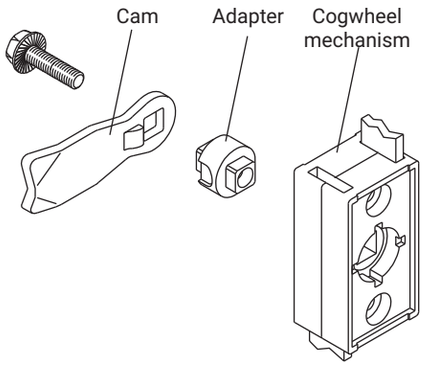

NOTE:
When ordering 1-point cam with limiter for Cogwheel mechanism, you must also order adapter, page 1C-27

STEEL ZINC PLATED

11 — APPLICATION: Locking system with cap and locks M22

H	Catalogue number	g*	h	L	GH:18 H	GH:19 H	GH:23 H	GH:28 H	GH:30 H	GH:38 H	GH:40 H	GH:50 H	GH:60 H
18	J-1751845	3	0	45	18	19	23	28	30	38	40	50	60
19	J-1751945	3	1	45	19	20	24	29	31	39	41	51	61
20	J-1752045	3	2	45	20	21	25	30	32	40	42	52	62
21	J-1752145	3	3	45	21	22	26	31	33	41	43	53	63
22	J-1752245	3	4	45	22	23	27	32	34	42	44	54	64
24	J-1752445	3	6	45	24	25	29	34	36	44	46	56	66
26	J-1752645	3	8	45	26	27	31	36	38	46	48	58	68
28	J-1752845	3	10	45	28	29	33	38	40	48	50	60	70
30	J-1753045	3	12	45	30	31	35	40	42	50	52	62	72
32	J-1753245	3	14	45	32	33	37	42	44	52	54	64	74
34	J-1753445	3	16	45	34	35	39	44	46	54	56	66	76
36	J-1753645	3	18	45	36	37	-	46	48	56	58	68	78
38	J-1753845	3	20	45	38	39	-	48	50	58	60	70	80
40	J-1754045	3	22	45	40	41	-	50	52	60	62	72	82
42	J-1754245	3	24	45	42	43	-	52	54	62	64	74	84
16	J-1751645	3	-2	45	16	17	-	26	28	36	38	48	58
14	J-1751445	3	-4	45	14	15	-	24	26	34	36	46	56
12	J-1751245	3	-6	45	12	13	-	22	24	32	34	44	54
10	J-1751045	3	-8	45	10	11	-	20	22	30	32	42	52
8	J-1750845	3	-10	45	8	9	-	28	20	28	30	40	50

CAM RANGE [G]

12 — APPLICATION: Locks M22

H	Catalogue number	g*	h	L	GH:18 H	GH:19 H	GH:23 H	GH:28 H	GH:30 H	GH:38 H	GH:40 H	GH:50 H	GH:60 H
18	J-1601845	3	0	45	18	19	23	28	30	38	40	50	60
19	J-1601945	3	1	45	19	20	24	29	31	39	41	51	61
20	J-1602045	3	2	45	20	21	25	30	32	40	42	52	62
21	J-1602145	3	3	45	21	22	26	31	33	41	43	53	63
22	J-1602245	3	4	45	22	23	27	32	34	42	44	54	64
24	J-1602445	3	6	45	24	25	29	34	36	44	46	56	66
26	J-1602645	3	8	45	26	27	31	36	38	46	48	58	68
28	J-1602845	3	10	45	28	29	33	38	40	48	50	60	70
30	J-1603045	3	12	45	30	31	35	40	42	50	52	62	72
32	J-1603245	3	14	45	32	33	37	42	44	52	54	64	74
34	J-1603445	3	16	45	34	35	39	44	46	54	56	66	76
36	J-1603645	3	18	45	36	37	-	46	48	56	58	68	78
38	J-1603845	3	20	45	38	39	-	48	50	58	60	70	80
40	J-1604045	3	22	45	40	41	-	50	52	60	62	72	82
42	J-1604245	3	24	45	42	43	-	52	54	62	64	74	84
16	J-1601645	3	-2	45	16	17	-	26	28	36	38	48	58
14	J-1601445	3	-4	45	14	15	-	24	26	34	36	46	56
12	J-1601245	3	-6	45	12	13	-	22	24	32	34	44	54
10	J-1601045	3	-8	45	10	11	-	20	22	30	32	42	52
8	J-1600845	3	-10	45	8	9	-	28	20	28	30	40	50

CAM RANGE [G]

When ordering a custom cam, you should contact your dealer for more details .

STAINLESS STEEL

13	APPLICATION: Locking system with cap and locksM22													
	H	Numer katalogowy	g*	h	L	GH:18 H	GH:19 H	GH:23 H	GH:28 H	GH:30 H	GH:38 H	GH:40 H	GH:50 H	GH:60 H
CAM RANGE [G]	18	J-1751845SN	3	0	45	18	19	23	28	30	38	40	50	60
	19	J-1751945SN	3	1	45	19	20	24	29	31	39	41	51	61
	20	J-1752045SN	3	2	45	20	21	25	30	32	40	42	52	62
	21	J-1752145SN	3	3	45	21	22	26	31	33	41	43	53	63
	22	J-1752245SN	3	4	45	22	23	27	32	34	42	44	54	64
	24	J-1752445SN	3	6	45	24	25	29	34	36	44	46	56	66
	26	J-1752645SN	3	8	45	26	27	31	36	38	46	48	58	68
	28	J-1752845SN	3	10	45	28	29	33	38	40	48	50	60	70
	30	J-1753045SN	3	12	45	30	31	35	40	42	50	52	62	72
	32	J-1753245SN	3	14	45	32	33	37	42	44	52	54	64	74
	34	J-1753445SN	3	16	45	34	35	39	44	46	54	56	66	76
	36	J-1753645SN	3	18	45	36	37	-	46	48	56	58	68	78
	38	J-1753845SN	3	20	45	38	39	-	48	50	58	60	70	80
	40	J-1754045SN	3	22	45	40	41	-	50	52	60	62	72	82
	42	J-1754245SN	3	24	45	42	43	-	52	54	62	64	74	84
	16	J-1751645SN	3	-2	45	16	17	-	26	28	36	38	48	58
	14	J-1751445SN	3	-4	45	14	15	-	24	26	34	36	46	56
	12	J-1751245SN	3	-6	45	12	13	-	22	24	32	34	44	54
	10	J-1751045SN	3	-8	45	10	11	-	20	22	30	32	42	52
	8	J-175845SN	3	-10	45	8	9	-	28	20	28	30	40	50

14	APPLICATION: Locks M22													
	H	Numer katalogowy	g*	h	L	GH:18 H	GH:19 H	GH:23 H	GH:28 H	GH:30 H	GH:38 H	GH:40 H	GH:50 H	GH:60 H
CAM RANGE [G]	18	J-1601845SN	3	0	45	18	19	23	28	30	38	40	50	60
	19	J-1601945SN	3	1	45	19	20	24	29	31	39	41	51	61
	20	J-1602045SN	3	2	45	20	21	25	30	32	40	42	52	62
	21	J-1602145SN	3	3	45	21	22	26	31	33	41	43	53	63
	22	J-1602245SN	3	4	45	22	23	27	32	34	42	44	54	64
	24	J-1602445SN	3	6	45	24	25	29	34	36	44	46	56	66
	26	J-1602645SN	3	8	45	26	27	31	36	38	46	48	58	68
	28	J-1602845SN	3	10	45	28	29	33	38	40	48	50	60	70
	30	J-1603045SN	3	12	45	30	31	35	40	42	50	52	62	72
	32	J-1603245SN	3	14	45	32	33	37	42	44	52	54	64	74
	34	J-1603445SN	3	16	45	34	35	39	44	46	54	56	66	76
	36	J-1603645SN	3	18	45	36	37	-	46	48	56	58	68	78
	38	J-1603845SN	3	20	45	38	39	-	48	50	58	60	70	80
	40	J-1604045SN	3	22	45	40	41	-	50	52	60	62	72	82
	42	J-1604245SN	3	24	45	42	43	-	52	54	62	64	74	84
	16	J-1601645SN	3	-2	45	16	17	-	26	28	36	38	48	58
	14	J-1601445SN	3	-4	45	14	15	-	24	26	34	36	46	56
	12	J-1601245SN	3	-6	45	12	13	-	22	24	32	34	44	54
	10	J-1601045SN	3	-8	45	10	11	-	20	22	30	32	42	52
	8	J-160845SN	3	-10	45	8	9	-	28	20	28	30	40	50

When ordering a custom cam, you should contact your dealer for more details .

STEEL ZINC PLATED

15

CAM RANGE [G]

H	Cat. Number	g*	h	L	GH:18 H	GH:22 H	GH:30 H	GH:40 H	GH:50 H	GH:60 H
18	J-1001845	3	0	45	18	22	30	40	50	60
19	J-1001945	3	1	45	19	23	31	41	51	61
20	J-1002045	3	2	45	20	24	32	42	52	62
21	J-1002145	3	3	45	21	25	33	43	53	63
22	J-1002245	3	4	45	22	26	34	44	54	64
24	J-1002445	3	6	45	24	28	36	46	56	66
26	J-1002645	3	8	45	26	30	38	48	58	68
28	J-1002845	3	10	45	28	32	40	50	60	70
30	J-1003045	3	12	45	30	34	42	52	62	72
32	J-1003245	3	14	45	32	36	44	54	64	74
34	J-1003445	3	16	45	34	38	46	56	66	76
36	J-1003645	3	18	45	36	40	48	58	68	78
38	J-1003845	3	20	45	38	42	50	60	70	80
40	J-1004045	3	22	45	40	44	52	62	72	82
42	J-1004245	3	24	45	42	46	54	64	74	84
16	J-1001645	3	-2	45	16	20	28	38	48	58
14	J-1001445	3	-4	45	14	18	26	36	46	56
12	J-1001245	3	-6	45	12	16	24	34	44	54
10	J-1001045	3	-8	45	10	14	22	32	42	52
8	J-100845	3	-10	45	8	12	20	30	40	50
6	J-100645	3	-12	45	6	10	18	28	38	48
4	J-100445	3	-14	45	4	8	16	26	36	46

STAINLESS STEEL

16

CAM RANGE [G]

H	Cat. Number	g*	h	L	GH:18 H	GH:22 H	GH:30 H	GH:40 H	GH:50 H	GH:60 H
18	J-1001845SN	3	0	45	18	22	30	40	50	60
19	J-1001945SN	3	1	45	19	23	31	41	51	61
20	J-1002045SN	3	2	45	20	24	32	42	52	62
21	J-1002145SN	3	3	45	21	25	33	43	53	63
22	J-1002245SN	3	4	45	22	26	34	44	54	64
24	J-1002445SN	3	6	45	24	28	36	46	56	66
26	J-1002645SN	3	8	45	26	30	38	48	58	68
28	J-1002845SN	3	10	45	28	32	40	50	60	70
30	J-1003045SN	3	12	45	30	34	42	52	62	72
32	J-1003245SN	3	14	45	32	36	44	54	64	74
34	J-1003445SN	3	16	45	34	38	46	56	66	76
36	J-1003645SN	3	18	45	36	40	48	58	68	78
38	J-1003845SN	3	20	45	38	42	50	60	70	80
40	J-1004045SN	3	22	45	40	44	52	62	72	82
42	J-1004245SN	3	24	45	42	46	54	64	74	84
16	J-1001645SN	3	-2	45	16	20	28	38	48	58
14	J-1001445SN	3	-4	45	14	18	26	36	46	56
12	J-1001245SN	3	-6	45	12	16	24	34	44	54
10	J-1001045SN	3	-8	45	10	14	22	32	42	52
8	J-100845SN	3	-10	45	8	12	20	30	40	50
6	J-100645SN	3	-12	45	6	10	18	28	38	48
4	J-100445SN	3	-14	45	4	8	16	26	36	46

ROZTOCZE

STEEL ZINC PLATED

17	APPLICATION: Locking system with cap and locks M22													
	H	Catalogue number	g*	h	L	GH:18 H	GH:19 H	GH:23 H	GH:28 H	GH:30 H	GH:38 H	GH:40 H	GH:50 H	GH:60 H
CAM RANGE [G]	18	J-1651845	3	0	45	18	19	23	28	30	38	40	50	60
	19	J-1651945	3	1	45	19	20	24	29	31	39	41	51	61
	20	J-1652045	3	2	45	20	21	25	30	32	40	42	52	62
	21	J-1652145	3	3	45	21	22	26	31	33	41	43	53	63
	22	J-1652245	3	4	45	22	23	27	32	34	42	44	54	64
	24	J-1652445	3	6	45	24	25	29	34	36	44	46	56	66
	26	J-1652645	3	8	45	26	27	31	36	38	46	48	58	68
	28	J-1652845	3	10	45	28	29	33	38	40	48	50	60	70
	30	J-1653045	3	12	45	30	31	35	40	42	50	52	62	72
	32	J-1653245	3	14	45	32	33	37	42	44	52	54	64	74
	34	J-1653445	3	16	45	34	35	39	44	46	54	56	66	76
	36	J-1653645	3	18	45	36	37	-	46	48	56	58	68	78
	38	J-1653845	3	20	45	38	39	-	48	50	58	60	70	80
	40	J-1654045	3	22	45	40	41	-	50	52	60	62	72	82
	42	J-1654245	3	24	45	42	43	-	52	54	62	64	74	84
	16	J-1651645	3	-2	45	16	17	-	26	28	36	38	48	58
	14	J-1651445	3	-4	45	14	15	-	24	26	34	36	46	56
	12	J-1651245	3	-6	45	12	13	-	22	24	32	34	44	54
	10	J-1651045	3	-8	45	10	11	-	20	22	30	32	42	52
	8	J-1650845	3	-10	45	8	9	-	28	20	28	30	40	50

STAINLESS STEEL

17A	APPLICATION: Locks M22													
	H	Catalogue number	g*	h	L	GH:18 H	GH:19 H	GH:23 H	GH:28 H	GH:30 H	GH:38 H	GH:40 H	GH:50 H	GH:60 H
CAM RANGE [G]	18	J-1651845SN	3	0	45	18	19	23	28	30	38	40	50	60
	19	J-1651945SN	3	1	45	19	20	24	29	31	39	41	51	61
	20	J-1652045SN	3	2	45	20	21	25	30	32	40	42	52	62
	21	J-1652145SN	3	3	45	21	22	26	31	33	41	43	53	63
	22	J-1652245SN	3	4	45	22	23	27	32	34	42	44	54	64
	24	J-1652445SN	3	6	45	24	25	29	34	36	44	46	56	66
	26	J-1652645SN	3	8	45	26	27	31	36	38	46	48	58	68
	28	J-1652845SN	3	10	45	28	29	33	38	40	48	50	60	70
	30	J-1653045SN	3	12	45	30	31	35	40	42	50	52	62	72
	32	J-1653245SN	3	14	45	32	33	37	42	44	52	54	64	74
	34	J-1653445SN	3	16	45	34	35	39	44	46	54	56	66	76
	36	J-1653645SN	3	18	45	36	37	-	46	48	56	58	68	78
	38	J-1653845SN	3	20	45	38	39	-	48	50	58	60	70	80
	40	J-1654045SN	3	22	45	40	41	-	50	52	60	62	72	82
	42	J-1654245SN	3	24	45	42	43	-	52	54	62	64	74	84
	16	J-1651645SN	3	-2	45	16	17	-	26	28	36	38	48	58
	14	J-1651445SN	3	-4	45	14	15	-	24	26	34	36	46	56
	12	J-1651245SN	3	-6	45	12	13	-	22	24	32	34	44	54
	10	J-1651045SN	3	-8	45	10	11	-	20	22	30	32	42	52
	8	J-1650845SN	3	-10	45	8	9	-	28	20	28	30	40	50

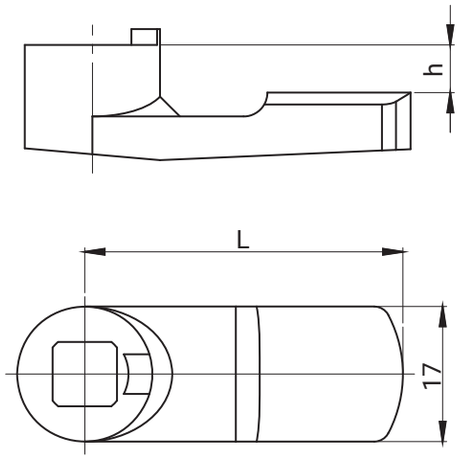

18	CAM WITH LIMITER								
CAM RANGE [G]	H	Cat. Number	h	L	GH:18 H	GH:30 H	GH:40 H	GH:50 H	GH:60 H
	18P	JP2-10018	0	40	18	30	40	50	60
	21P	JP2-10021	3	40	21	33	43	53	63
	24P	JP2-10024	6	40	24	36	46	56	66

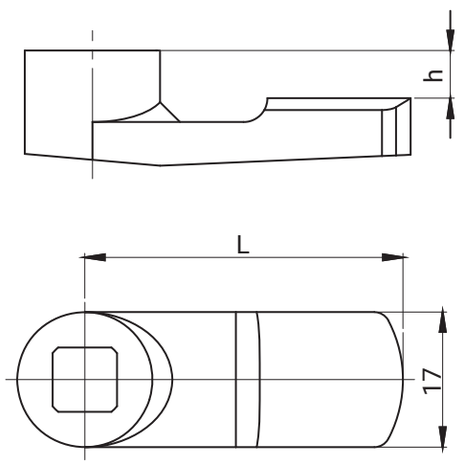

19	CAM WITHOUT LIMITER								
CAM RANGE [G]	H	Cat. Number	h	L	GH:18 H	GH:30 H	GH:40 H	GH:50 H	GH:60 H
	18P	JP-10018	0	40	18	30	40	50	60
	21P	JP-10021	3	40	21	33	43	53	63
	24P	JP-10024	6	40	24	36	46	56	66
	29P	JP-10029	11	40	29	41	51	61	71

2-point cam, 3-point cam without limiter

ROZTOCZE

stainless steel

3-point CAM
(without limiter
with ***protevtive element***)

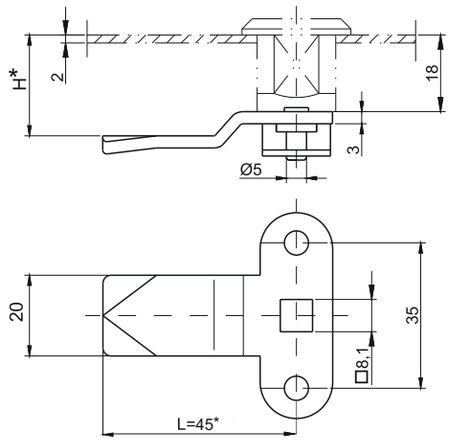

2-point CAM
(with **protective element**)

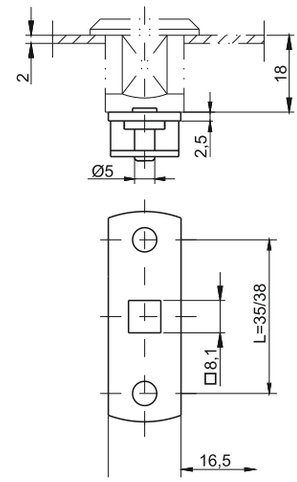

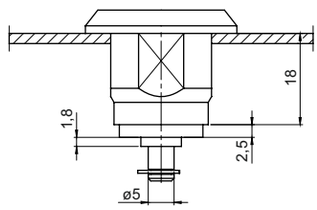

2-point CAM
(*with **Cir Clips ver. 1, ver. 2, ver. 3***)

ver. 1

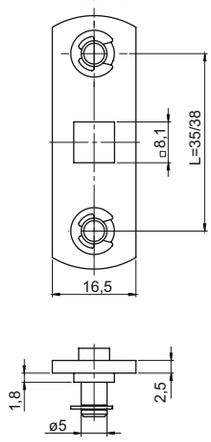

ver. 2

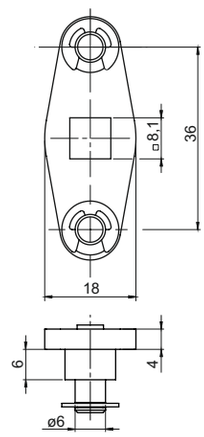

ver. 3

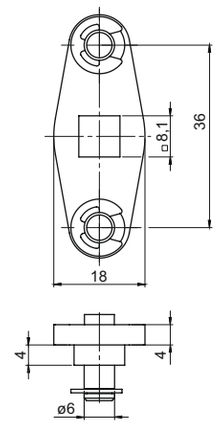

CAT. NUMBER		NAME	DIMENSIONS H [mm]	MATERIAL
STEEL ZINC PLATED	STAINLESS STEEL			
JB-30018	JB-30018SN	3-point Cam without limiter with **protective element**	18	Steel zinc plated or stainless steel
JB-30021	JB-30021SN		21	
JB-30024	JB-30024SN		24	
JB-30029	JB-30029SN		29	
JB-20018/35	JB-20018/35SN	2-point Cam with **protective element**	18L=35	Steel zinc plated or stainless steel
JB-20018/38	JB-20018/38SN		18L=38	
J-20018/35	J-20018/35SN	2-point Cam with **Cir Clips ver. 1**	18L=35	Steel zinc plated or stainless steel
J-20018/38	J-20018/38SN		18L=38	
J-20018/36	J-20018/36SN	2-point Cam with **Cir Clips ver. 2**	18L=36	Steel zinc plated or stainless steel
JA-20018/36	JA-20018/36SN	2-point Cam with **Cir Clips ver.3**	18L=36	
• **dimension negotiable*				

21 CAM RANGE [G]

NOTE: When ordering 2-point Cams with dimension between pins 35 mm you must add /35 e.g. (JB-20018/35 or J-20018/35).

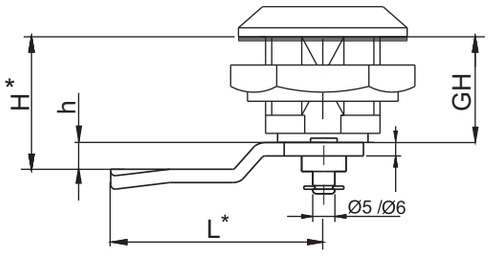

GH - height body
H - height locking
h - height cam
L - lenght cam
g - thickness cam

3-point CAM with limiter

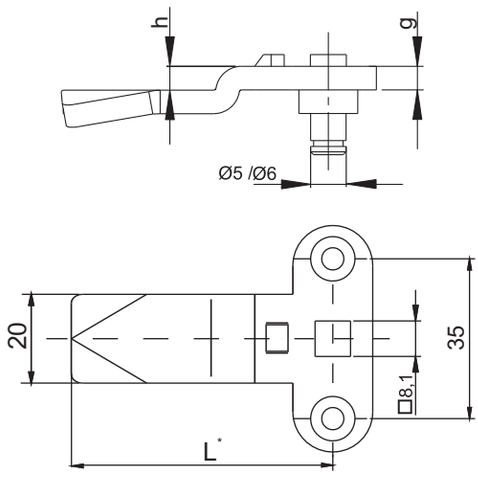

3-point CAM without limiter

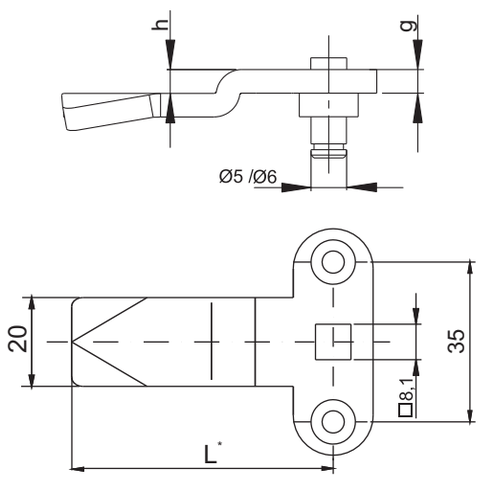

ROZTOCZE

STEEL ZINC PLATED

31

APPLICATION: Locking system with cap and locks M22													
H	Numer katalogowy	g*	h	L	GH:18 H	GH:19 H	GH:23 H	GH:28 H	GH:30 H	GH:38 H	GH:40 H	GH:50 H	GH:60 H
18	J-3751845	3	0	45	18	19	23	28	30	38	40	50	60
19	J-3751945	3	1	45	19	20	24	29	31	39	41	51	61
20	J-3752045	3	2	45	20	21	25	30	32	40	42	52	62
21	J-3752145	3	3	45	21	22	26	31	33	41	43	53	63
22	J-3752245	3	4	45	22	23	27	32	34	42	44	54	64
24	J-3752445	3	6	45	24	25	29	34	36	44	46	56	66
26	J-3752645	3	8	45	26	27	31	36	38	46	48	58	68
28	J-3752845	3	10	45	28	29	33	38	40	48	50	60	70
30	J-3753045	3	12	45	30	31	35	40	42	50	52	62	72
32	J-3753245	3	14	45	32	33	37	42	44	52	54	64	74
34	J-3753445	3	16	45	34	35	39	44	46	54	56	66	76
36	J-3753645	3	18	45	36	37	-	46	48	56	58	68	78
38	J-3753845	3	20	45	38	39	-	48	50	58	60	70	80
40	J-3754045	3	22	45	40	41	-	50	52	60	62	72	82
42	J-3754245	3	24	45	42	43	-	52	54	62	64	74	84
16	J-3751645	3	-2	45	16	17	-	26	28	36	38	48	58
14	J-3751445	3	-4	45	14	15	-	24	26	34	36	46	56
12	J-3751245	3	-6	45	12	13	-	22	24	32	34	44	54
10	J-3751045	3	-8	45	10	11	-	20	22	30	32	42	52

CAM RANGE [G]

32

APPLICATION: Locks M22													
H	Numer katalogowy	g*	h	L	GH:18 H	GH:19 H	GH:23 H	GH:28 H	GH:30 H	GH:38 H	GH:40 H	GH:50 H	GH:60 H
18	J-3601845	3	0	45	18	19	23	28	30	38	40	50	60
19	J-3601945	3	1	45	19	20	24	29	31	39	41	51	61
20	J-3602045	3	2	45	20	21	25	30	32	40	42	52	62
21	J-3602145	3	3	45	21	22	26	31	33	41	43	53	63
22	J-3602245	3	4	45	22	23	27	32	34	42	44	54	64
24	J-3602445	3	6	45	24	25	29	34	36	44	46	56	66
26	J-3602645	3	8	45	26	27	31	36	38	46	48	58	68
28	J-3602845	3	10	45	28	29	33	38	40	48	50	60	70
30	J-3603045	3	12	45	30	31	35	40	42	50	52	62	72
32	J-3603245	3	14	45	32	33	37	42	44	52	54	64	74
34	J-3603445	3	16	45	34	35	39	44	46	54	56	66	76
36	J-3603645	3	18	45	36	37	-	46	48	56	58	68	78
38	J-3603845	3	20	45	38	39	-	48	50	58	60	70	80
40	J-3604045	3	22	45	40	41	-	50	52	60	62	72	82
42	J-3604245	3	24	45	42	43	-	52	54	62	64	74	84
16	J-3601645	3	-2	45	16	17	-	26	28	36	38	48	58
14	J-3601445	3	-4	45	14	15	-	24	26	34	36	46	56
12	J-3601245	3	-6	45	12	13	-	22	24	32	34	44	54
10	J-3601045	3	-8	45	10	11	-	20	22	30	32	42	52

CAM RANGE [G]

When ordering a custom cam, you should contact your dealer for more details ..

STAINLESS STEEL

33	APPLICATION: Locking system with cap and locks M22													
	H	Catalogue number	g*	h	L	GH:18 H	GH:19 H	GH:23 H	GH:28 H	GH:30 H	GH:38 H	GH:40 H	GH:50 H	GH:60 H
CAM RANGE [G]	18	J-3751845SN	3	0	45	18	19	23	28	30	38	40	50	60
	19	J-3751945SN	3	1	45	19	20	24	29	31	39	41	51	61
	20	J-3752045SN	3	2	45	20	21	25	30	32	40	42	52	62
	21	J-3752145SN	3	3	45	21	22	26	31	33	41	43	53	63
	22	J-3752245SN	3	4	45	22	23	27	32	34	42	44	54	64
	24	J-3752445SN	3	6	45	24	25	29	34	36	44	46	56	66
	26	J-3752645SN	3	8	45	26	27	31	36	38	46	48	58	68
	28	J-3752845SN	3	10	45	28	29	33	38	40	48	50	60	70
	30	J-3753045SN	3	12	45	30	31	35	40	42	50	52	62	72
	32	J-3753245SN	3	14	45	32	33	37	42	44	52	54	64	74
	34	J-3753445SN	3	16	45	34	35	39	44	46	54	56	66	76
	36	J-3753645SN	3	18	45	36	37	-	46	48	56	58	68	78
	38	J-3753845SN	3	20	45	38	39	-	48	50	58	60	70	80
	40	J-3754045SN	3	22	45	40	41	-	50	52	60	62	72	82
	42	J-3754245SN	3	24	45	42	43	-	52	54	62	64	74	84
	16	J-3751645SN	3	-2	45	16	17	-	26	28	36	38	48	58
	14	J-3751445SN	3	-4	45	14	15	-	24	26	34	36	46	56
	12	J-3751245SN	3	-6	45	12	13	-	22	24	32	34	44	54
	10	J-3751045SN	3	-8	45	10	11	-	20	22	30	32	42	52
	8	J-375845SN	3	-10	45	8	9	-	28	20	28	30	40	50

34	APPLICATION: Locks M22													
	H	Catalogue number	g*	h	L	GH:18 H	GH:19 H	GH:23 H	GH:28 H	GH:30 H	GH:38 H	GH:40 H	GH:50 H	GH:60 H
CAM RANGE [G]	18	J-3601845SN	3	0	45	18	19	23	28	30	38	40	50	60
	19	J-3601945SN	3	1	45	19	20	24	29	31	39	41	51	61
	20	J-3602045SN	3	2	45	20	21	25	30	32	40	42	52	62
	21	J-3602145SN	3	3	45	21	22	26	31	33	41	43	53	63
	22	J-3602245SN	3	4	45	22	23	27	32	34	42	44	54	64
	24	J-3602445SN	3	6	45	24	25	29	34	36	44	46	56	66
	26	J-3602645SN	3	8	45	26	27	31	36	38	46	48	58	68
	28	J-3602845SN	3	10	45	28	29	33	38	40	48	50	60	70
	30	J-3603045SN	3	12	45	30	31	35	40	42	50	52	62	72
	32	J-3603245SN	3	14	45	32	33	37	42	44	52	54	64	74
	34	J-3603445SN	3	16	45	34	35	39	44	46	54	56	66	76
	36	J-3603645SN	3	18	45	36	37	-	46	48	56	58	68	78
	38	J-3603845SN	3	20	45	38	39	-	48	50	58	60	70	80
	40	J-3604045SN	3	22	45	40	41	-	50	52	60	62	72	82
	42	J-3604245SN	3	24	45	42	43	-	52	54	62	64	74	84
	16	J-3601645SN	3	-2	45	16	17	-	26	28	36	38	48	58
	14	J-3601445SN	3	-4	45	14	15	-	24	26	34	36	46	56
	12	J-3601245SN	3	-6	45	12	13	-	22	24	32	34	44	54
	10	J-3601045SN	3	-8	45	10	11	-	20	22	30	32	42	52
	8	J-360845SN	3	-10	45	8	9	-	28	20	28	30	40	50

When ordering a custom cam, you should contact your dealer for more details ..

ROZTOCZE

STAINLESS STEEL

35	H	Cat. Number	g*	h	L	GH:18 H	GH:22 H	GH:30 H	GH:40 H	GH:50 H	GH:60 H
CAM RANGE [G]	18	J-3001845	3	0	45	18	22	30	40	50	60
	19	J-3001945	3	1	45	19	23	31	41	51	61
	20	J-3002045	3	2	45	20	24	32	42	52	62
	21	J-3002145	3	3	45	21	25	33	43	53	63
	22	J-3002245	3	4	45	22	26	34	44	54	64
	24	J-3002445	3	6	45	24	28	36	46	56	66
	26	J-3002645	3	8	45	26	30	38	48	58	68
	28	J-3002845	3	10	45	28	32	40	50	60	70
	30	J-3003045	3	12	45	30	34	42	52	62	72
	32	J-3003245	3	14	45	32	36	44	54	64	74
	34	J-3003445	3	16	45	34	38	46	56	66	76
	36	J-3003645	3	18	45	36	40	48	58	68	78
	38	J-3003845	3	20	45	38	42	50	60	70	80
	40	J-3004045	3	22	45	40	44	52	62	72	82
	42	J-3004245	3	24	45	42	46	54	64	74	84
	16	J-3001645	3	-2	45	16	20	28	38	48	58
	14	J-3001445	3	-4	45	14	18	26	36	46	56
	12	J-3001245	3	-6	45	12	16	24	34	44	54
	10	J-3001045	3	-8	45	10	14	22	32	42	52
	8	J-3000845	3	-10	45	8	12	20	30	40	50

STAINLESS STEEL

36	H	Cat. Number	g*	h	L	GH:18 H	GH:22 H	GH:30 H	GH:40 H	GH:50 H	GH:60 H
CAM RANGE [G]	18	J-3001845SN	3	0	45	18	22	30	40	50	60
	19	J-3001945SN	3	1	45	19	23	31	41	51	61
	20	J-3002045SN	3	2	45	20	24	32	42	52	62
	21	J-3002145SN	3	3	45	21	25	33	43	53	63
	22	J-3002245SN	3	4	45	22	26	34	44	54	64
	24	J-3002445SN	3	6	45	24	28	36	46	56	66
	26	J-3002645SN	3	8	45	26	30	38	48	58	68
	28	J-3002845SN	3	10	45	28	32	40	50	60	70
	30	J-3003045SN	3	12	45	30	34	42	52	62	72
	32	J-3003245SN	3	14	45	32	36	44	54	64	74
	34	J-3003445SN	3	16	45	34	38	46	56	66	76
	36	J-3003645SN	3	18	45	36	40	48	58	68	78
	38	J-3003845SN	3	20	45	38	42	50	60	70	80
	40	J-3004045SN	3	22	45	40	44	52	62	72	82
	42	J-3004245SN	3	24	45	42	46	54	64	74	84
	16	J-3001645SN	3	-2	45	16	20	28	38	48	58
	14	J-3001445SN	3	-4	45	14	18	26	36	46	56
	12	J-3001245SN	3	-6	45	12	16	24	34	44	54
	10	J-3001045SN	3	-8	45	10	14	22	32	42	52
	8	J-3000845SN	3	-10	45	8	12	20	30	40	50

1-point hook cam
TYPE JK

JK1-10018-G-M

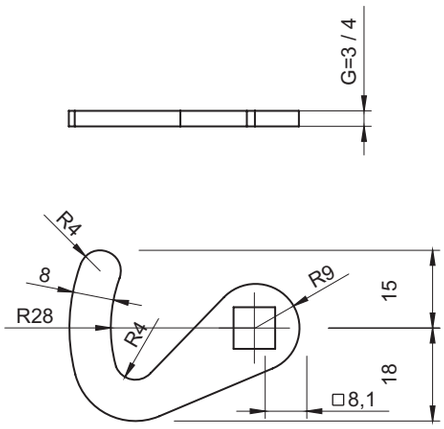

JK2-10018-G-M

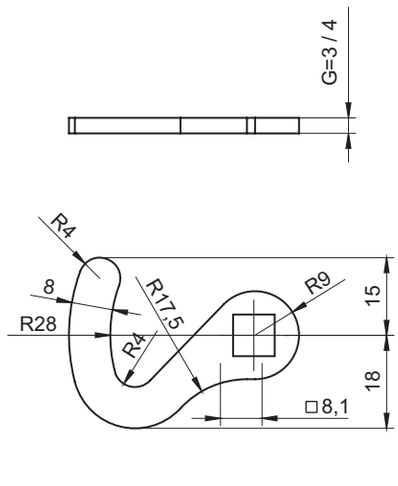

JK1-16018-G-L-M

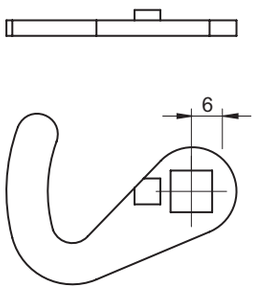

JK2-16018-G-P-M

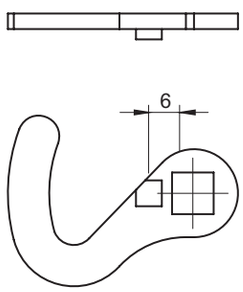

JK1 Left

JK1 Right

JK2 Left

JK2 Right

CAT. NUMBER		DESCRIPTION	MATERIAL
JK1-10018-G-M	JK2-10018-G-M	Cam no limiter	ST - steel zinc plated SN - stainless steel
JK1-16018-G-L-M	JK2-16018-G-L-M	Left cam with limiter	
JK1-16018-G-P-M	JK2-16018-G-P-M	Right cam with limiter	

How to order :

JK1-10018 — G — L — ST

Catalogue no.

Thickness cam G=3, 4

Closing direction L-left, P-right
(Only for cam with limiter)

Material version (ST, SN)

stainless steel

1-point cam without limiter
TYP J-6000

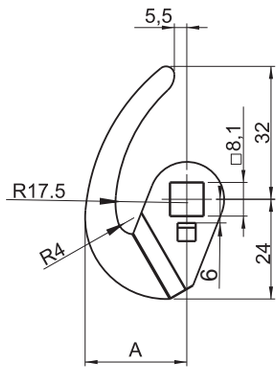

1-point cam with limiter
TYP J-6000

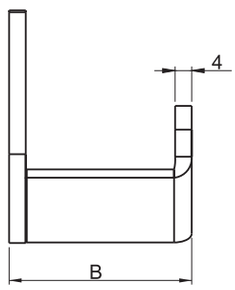

1-point cam stepped
TYP JK-1610.01.

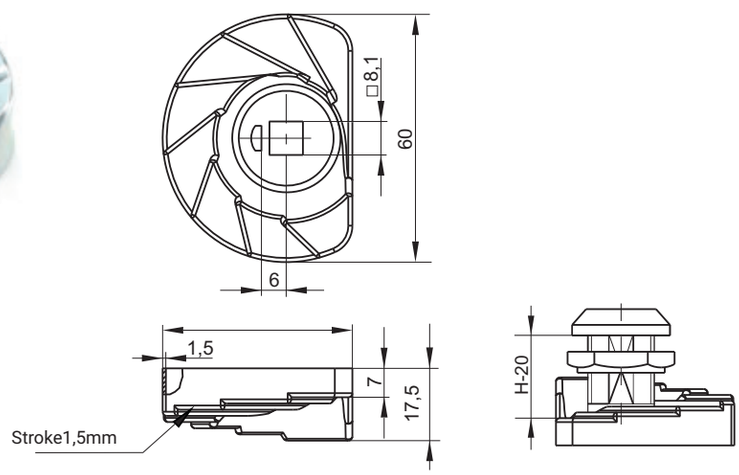

Dimension H 18mm: 20, 18.5, 17, 15.5, 14, 12.5, 11, 9.5
Cam works with housing 18, 30, 60

CAT. NUMBER		NAME	DIMENSION [mm]		
STEEL	STAINLESS STEEL		h	A	B
J-6000.01	J-6000.01SN	1-point cam hook without limiter	22	26	26
J-6000.02	J-6000.02SN		40	24,5	44
J-6000.03	J-6000.03SN	1-point cam hook with limiter	22	26	26
J-6000.04	J-6000.04SN		40	24,5	44
JK-1610.01		1-point cam stepped			
• ***dimensions** *negotiable*					

stainless steel

3-point CAM.
(with limiter and **protective element for Cap**)

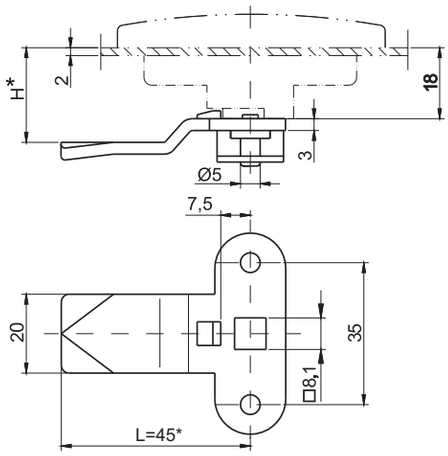

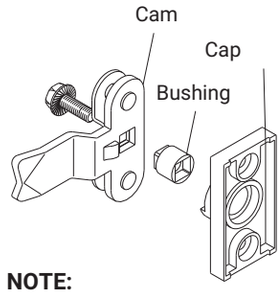

NOTE:
When ordering 3-point cam with limiter for cap, you must order bushing, page 1C-27.

3-point CAM.
(with limiter and **protective element**)

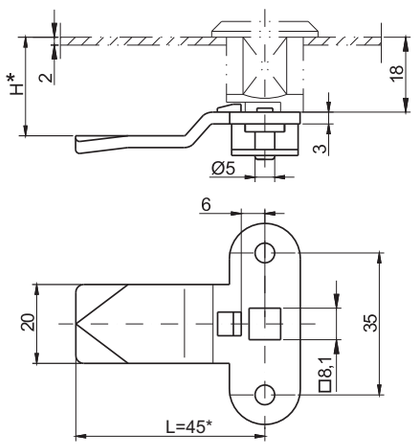

3-point CAM.
(with limiter)

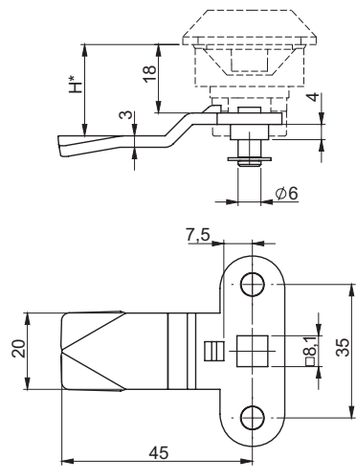

38	CAT. NUMBER		NAME	DIMENSION H [mm]	MATERIAL
	SEEL ZINC PLATED	STAINLESS STEEL			
CAM RANGE [G]	JBN-37518	JBN-37518SN	3-point cam with limiter and **protective element** used with **cap, pager** 1C-9	18	Steel zinc plated or Stainless Steel
	JBN-37521	JBN-37521SN		21	
	JBN-37524	JBN-37524SN		24	
	JBN-37529	JBN-37529SN		29	
	JB-37518	JB-37518SN	3-point cam with limiter and **protective element**	18	Steel zinc plated or Stainless Steel
	JB-37521	JB-37521SN		21	
	JB-37524	JB-37524SN		24	
	JB-37529	JB-37529SN		29	
	JA-3751845	JB-3751845SN	3-point cam with limiter	18	Steel zinc plated or Stainless Steel
	JA-3752145	JB-3752145SN		21	
	JA-3752445	JB-3752445SN		24	
	JA-3752945	JB-3752945SN		29	

• ****dimension*** *negotiable - extra charge*

1-point CAM JZ
(without limiter)

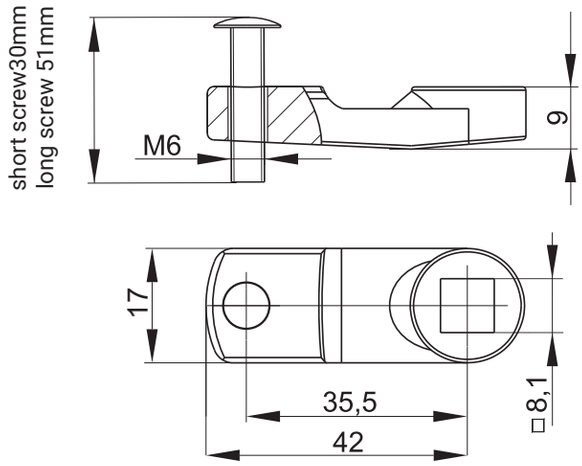

1-point CAM JZ
(with limiter)

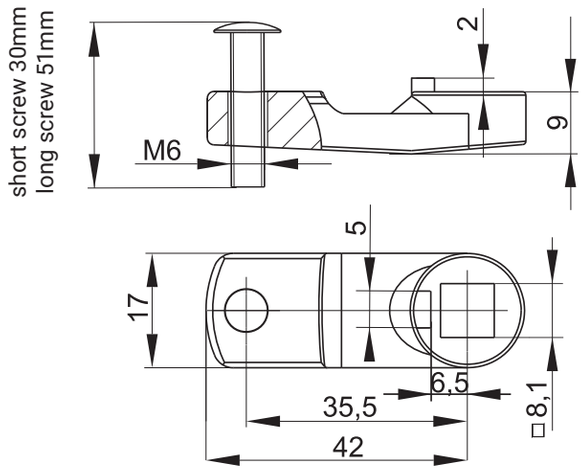

CAT. NUMBER	NAME	MATERIAL
JZ-001	1-point CAM JZ without limited	Zamak - RAL 9005, zinc plated, chrome
JZ-002	1-point CAM JZ with limited	Zamak - RAL 9005, zinc plated, chrome

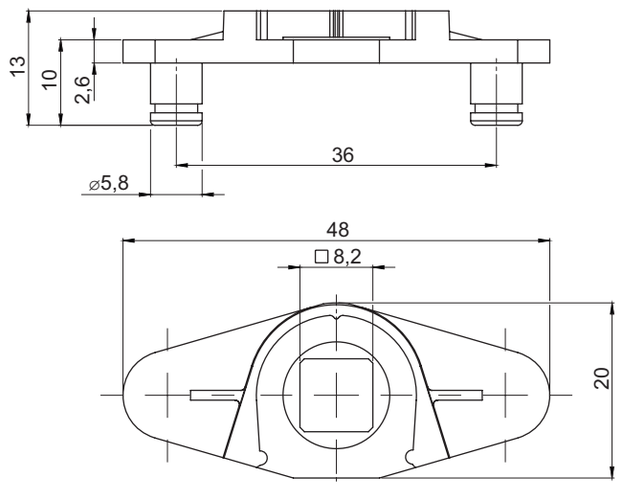

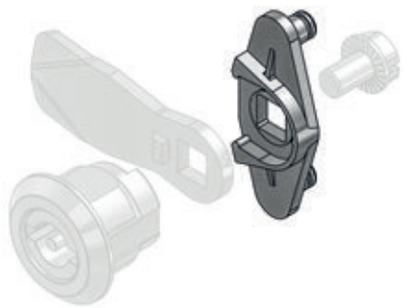

CATALOGUE NO.	DETAIL	MATERIAL
JC-20018/36	Cam adapter	ZAMAK, zinc plated

Cam adapter JC-20018/36 is fitted with the rod 1C.904.051.
and group of cams 1-point no. 11, 12, 13, 14, 15, 16 i 17 (pg. 1C-10 - 1C-13)

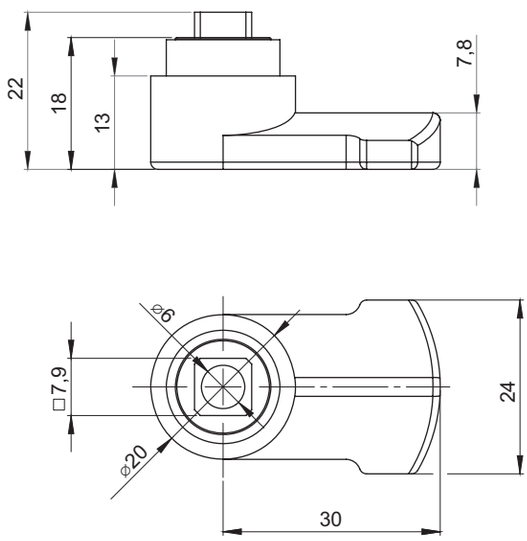

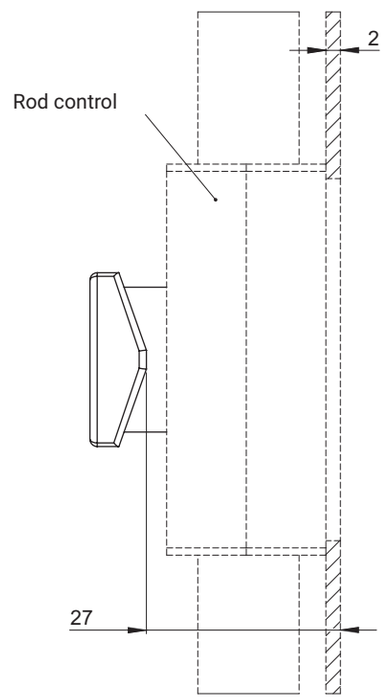

CATALOGUE NO.	DETAIL	MATERIAL
JZN-10027/30	Cam	ZAMAK, zinc plated

Adapter fitted with rod control.
(pg.: 1C-28 - 1C-33)

Sliding End Cap 1C.920.001

NEW

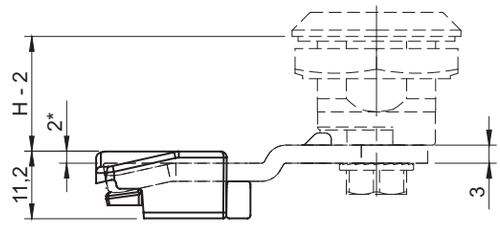

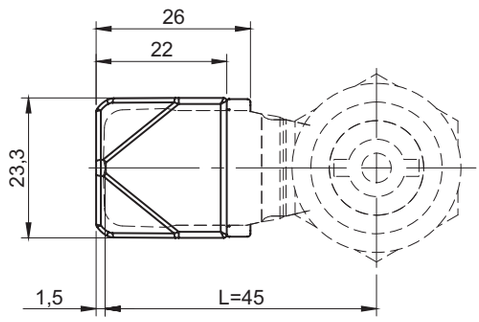

1. Place the clip at the bottom end of the cam

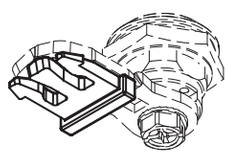

2. Slide the cap onto the clip

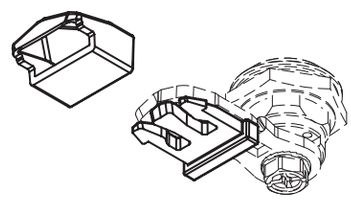

3. Holding the clip and the cam slide the cap on completely

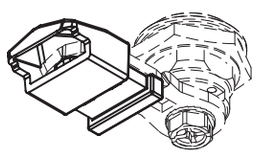

4. The cap will eventually slide into place, signaled by a distinct click

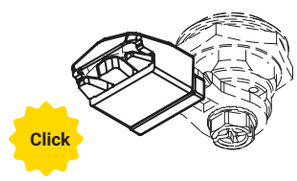

* The addition of the Sliding End Cap decreases the functioning height H by 2mm.
- Good material properties ensure less friction on contact.
- The use of the Sliding End Cap prevents metal-on-metal contact which increases the safety of electrical and electronic components inside the cabinet.

Sliding End Cap 1C.920.001 is compatible with cams:
J-175.20.45, J-175.23.45, J-175.26.45, J-175.29.45,

CATALOGUE NO.	MATERIAL
1C.920.001	Natural POM

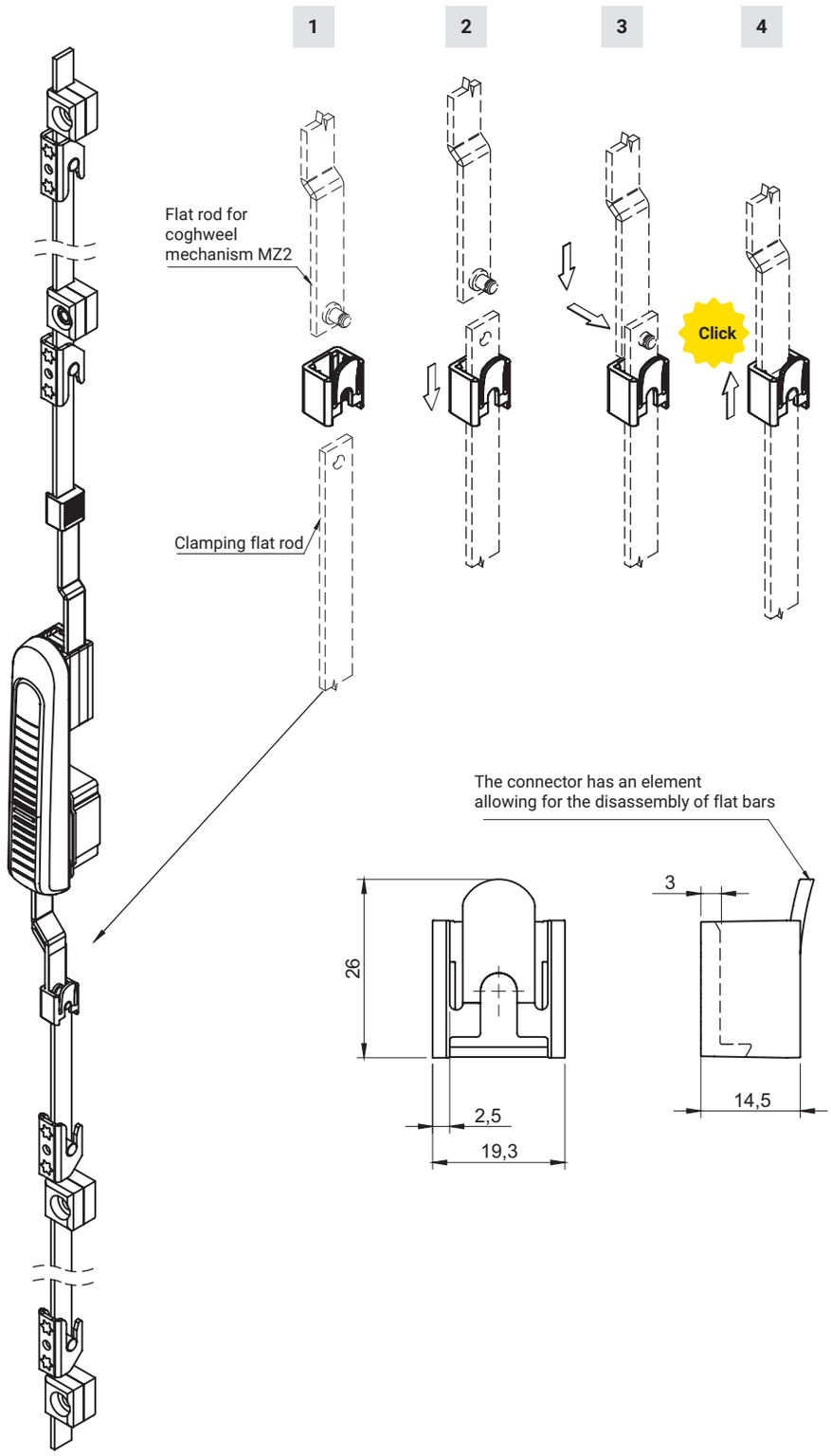

The MZ2 quick-mount bracket for the MZ2 gear unit flat bars with clamping bars is compatible with:
- flat bars with rollers: A20, A25 page 1C-34,
- flat clamping bars on the round hole P: ver. A, ver. B, ver. C, ver. D pg. 1C-36 - 1C-40

CATALOGUE NO.	MATERIAL
1C.921.001	Polyadmide PA6 GF30

Cap 1C.902, bushing 1C.901, adapter 1C.903

1PL
2PL
3PL

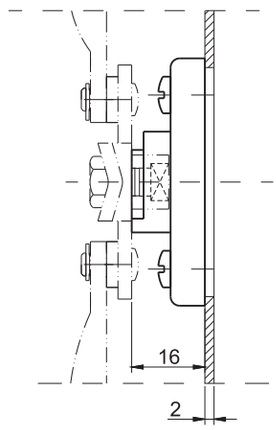

CAP
1C.902.001

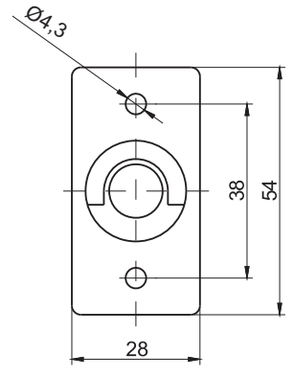

1PL
2PL
3PL

CAP
1C.902.003

Cap can be fitted with earthing

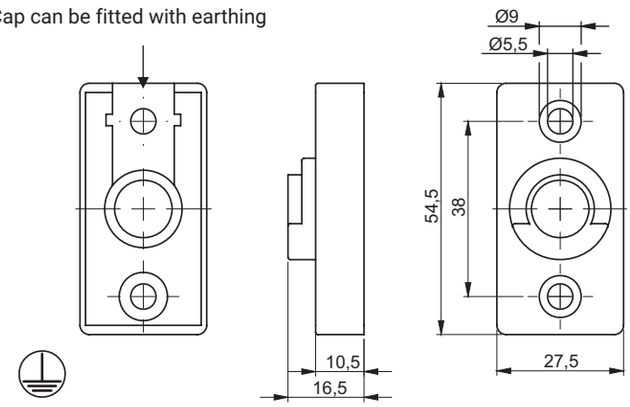

ADAPTER
1C.903.001

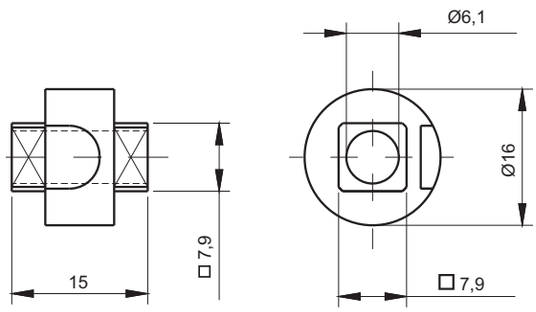

BUSHING

1C.901.001 | 1C.901.005

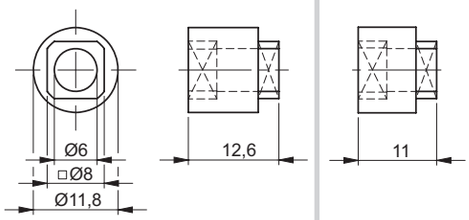

CAT. NUMBER	NAME	MATERIAL
1C.901.001	Bushing for doors at thickness 2,5mm	ZAMAK
1C.901.001SN	Bushing for doors at thickness 2,5mm	Stainless steel
1C.901.005	Bushing for doors at thickness 1,5mm	ZAMAK
1C.901.005SN	Bushing for doors at thickness 1,5mm	Stainless steel
1C.902.001	Cap	ZAMAK
1C.902.001SN	Cap	Stainless steel
1C.902.003	Cap PA	Polyamide
1C.903.001	Adapter	ZAMAK
1C.903.001SN	Adapter	Stainless steel

2PL 3PL

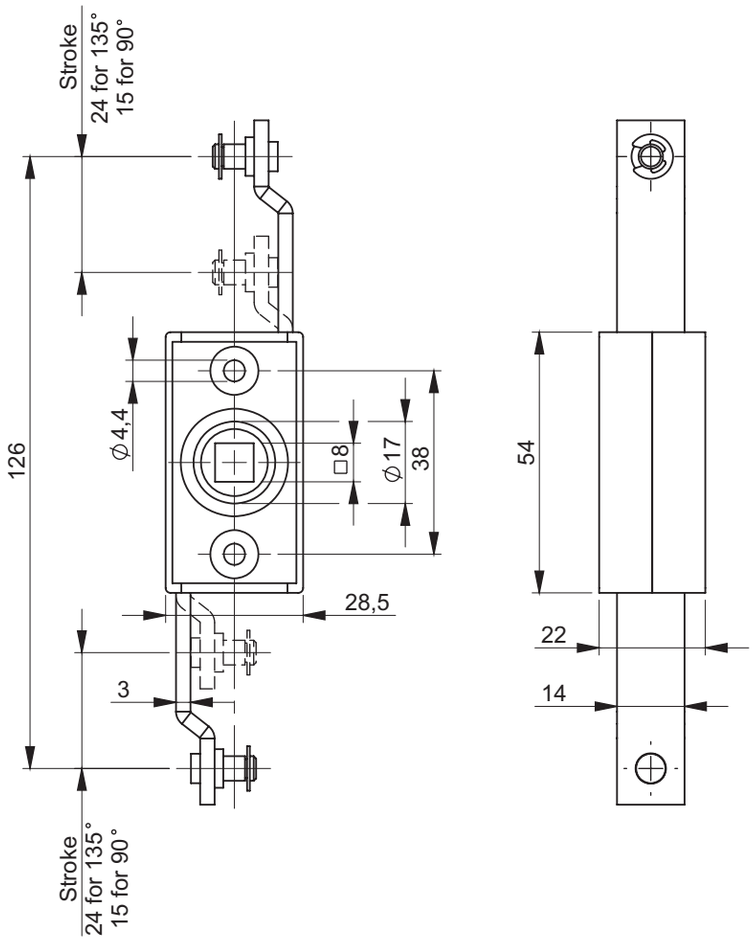

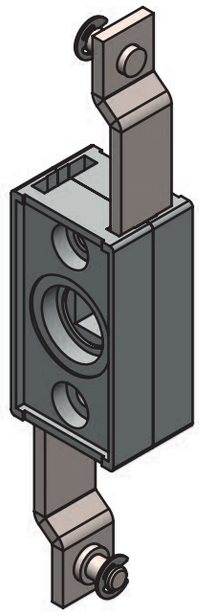

NOTE:
When ordering cogwheel mechanism MZ1K or MZ1P you must order flat rod with correct hole

Cogweel mechanism MZ1

Version		CATALOGUE NO.	COMPONENTS	
			Housing	Flat rods
MZ1	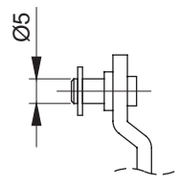	MZ1	ZAMAK5	Stainless steel
		MZ1-PA	Polyamide PA6	
		MZ1-PA-SN		Stainless steel
		MZ1-SN	Stainless steel	
MZ1-6	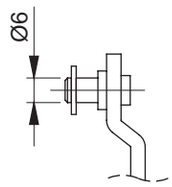	MZ1-6	ZAMAK5	Steel zink plated
		MZ1-6-PA	Polyamide PA6	
		MZ1-6-PA-SN		Stainless steel
		MZ1-6-SN	Stainless steel	
MZ1K	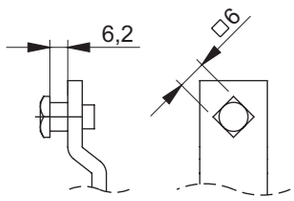	MZ1K	ZAMAK5	Steel zink plated
		MZ1K-PA	Polyamide PA6	
		MZ1K-PA-SN		Stainless steel
		MZ1K-SN	Stainless steel	
MZ1P	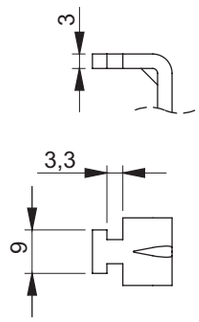	MZ1P	ZAMAK5	Steel zink plated
		MZ1P-PA	Polyamide PA6	
		MZ1P-PA-SN		Stainless steel
		MZ1P-SN	Stainless steel	

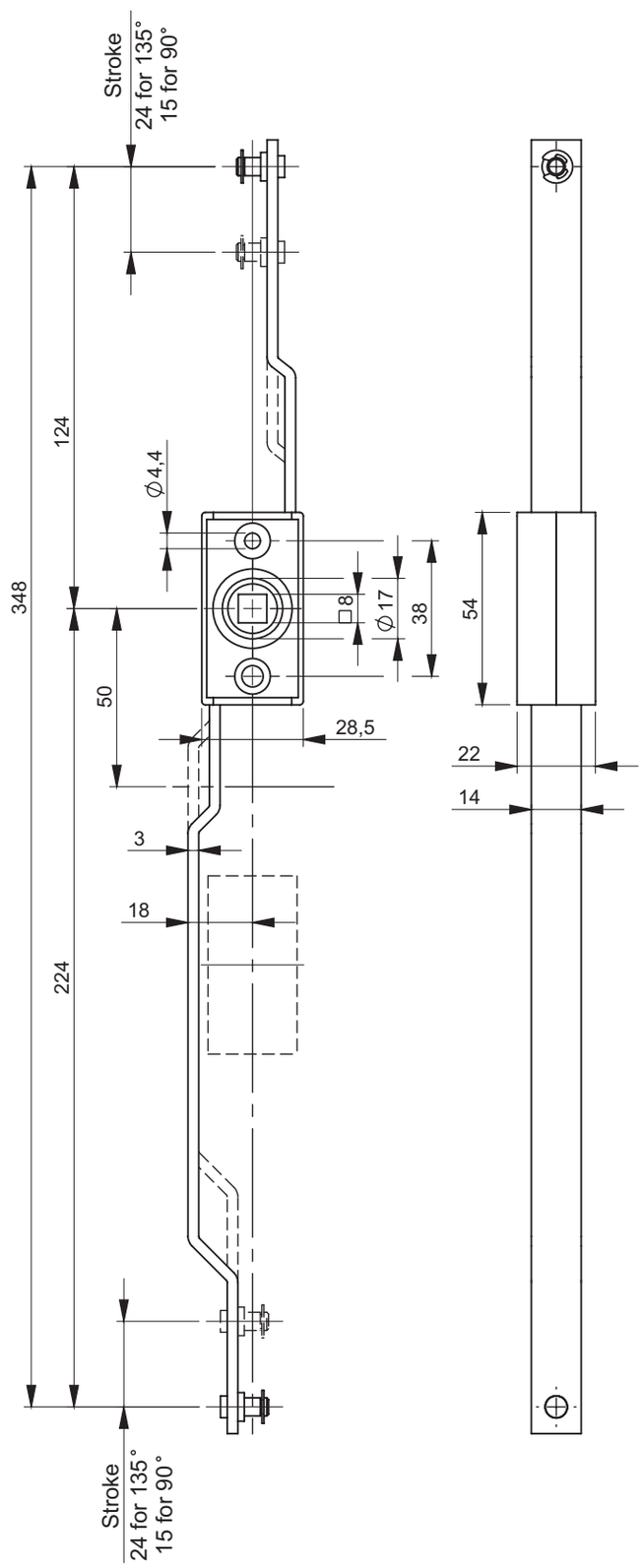

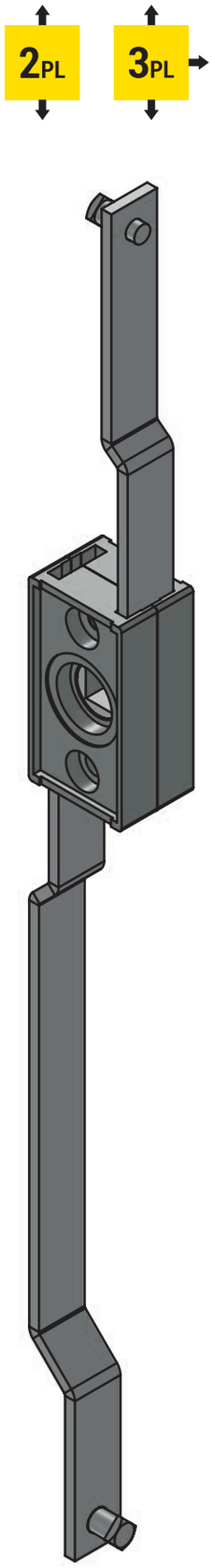

NOTE:
When ordering cogwheel mechanism MZ2K or MZ2P you must order flat rod with correct hole

Cogweel mechanism MZ2

Version		CATALOGUE NO.	COMPONENTS	
			Housing	Flat rods
MZ2	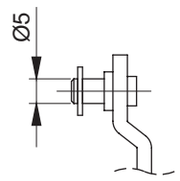	MZ2	ZAMAK5	Stainless steel
		MZ2-PA	Polyamide PA6	
		MZ2-PA-SN		Stainless steel
		MZ2-SN	Stainless steel	
MZ2-6	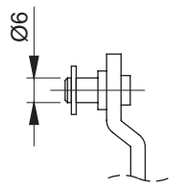	MZ2-6	ZAMAK5	Steel zink plated
		MZ2-6-PA	Polyamide PA6	
		MZ2-6-PA-SN		Stainless steel
		MZ2-6-SN	Stainless steel	
MZ2K	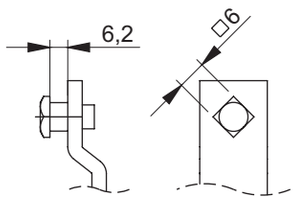	MZ2K	ZAMAK5	Steel zink plated
		MZ2K-PA	Polyamide PA6	
		MZ2K-PA-SN		Stainless steel
		MZ2K-SN	Stainless steel	
MZ2P	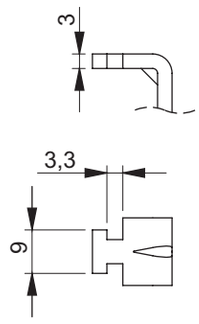	MZ2P	ZAMAK5	Steel zink plated
		MZ2P-PA	Polyamide PA6	
		MZ2P-PA-SN		Stainless steel
		MZ2P-SN	Stainless steel	

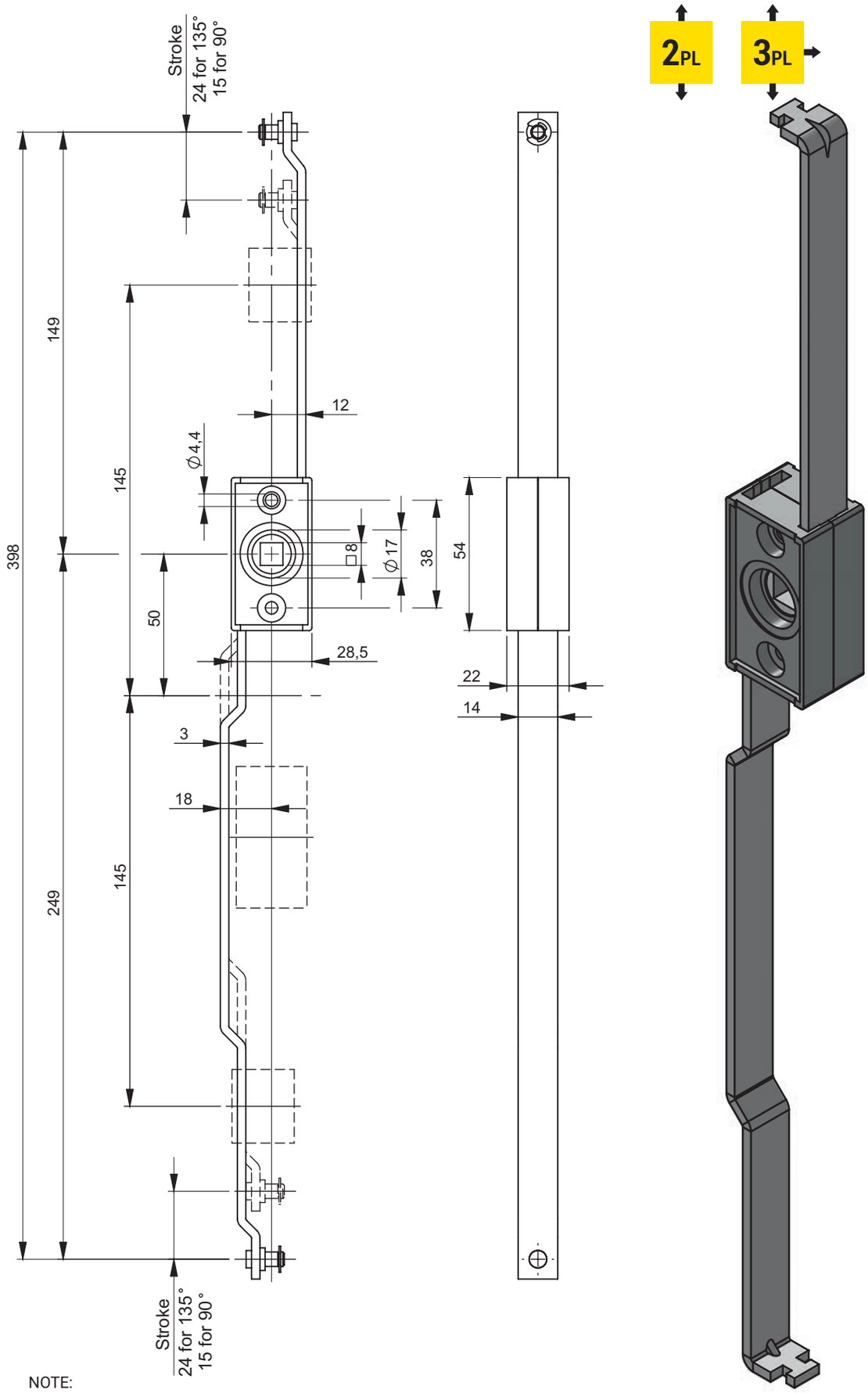

NOTE:
When ordering cogwheel mechanism MZ3K or MZ3P you must order flat rod with correct hole

Cogweel mechanism MZ3

Version		CATALOGUE NO.	COMPONENTS	
			Housing	Flat rods
MZ3	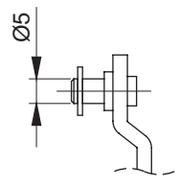	MZ3	ZAMAK5	Steel zink plated
		MZ3-PA	Polyamide PA6	
		MZ3-PA-SN		Stainless steel
		MZ3-SN	Stainless steel	
MZ3-6	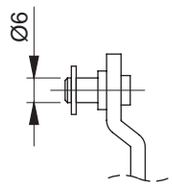	MZ3-6	ZAMAK5	Steel zink plated
		MZ3-6-PA	Polyamide PA6	
		MZ3-6-PA-SN		Stainless steel
		MZ3-6-SN	Stainless steel	
MZ3K	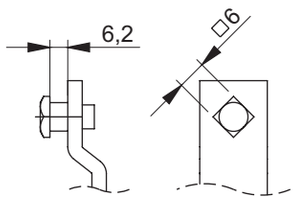	MZ3K	ZAMAK5	Steel zink plated
		MZ3K-PA	Polyamide PA6	
		MZ3K-PA-SN		Stainless steel
		MZ3K-SN	Stainless steel	
MZ3P	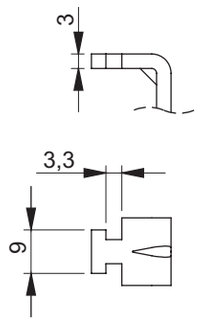	MZ3P	ZAMAK5	Steel zink plated
		MZ3P-PA	Polyamide PA6	
		MZ3P-PA-SN		Stainless steel
		MZ3P-SN	Stainless steel	

FLAT ROD WITH ROLLERS A25 L
(with **round hole**)

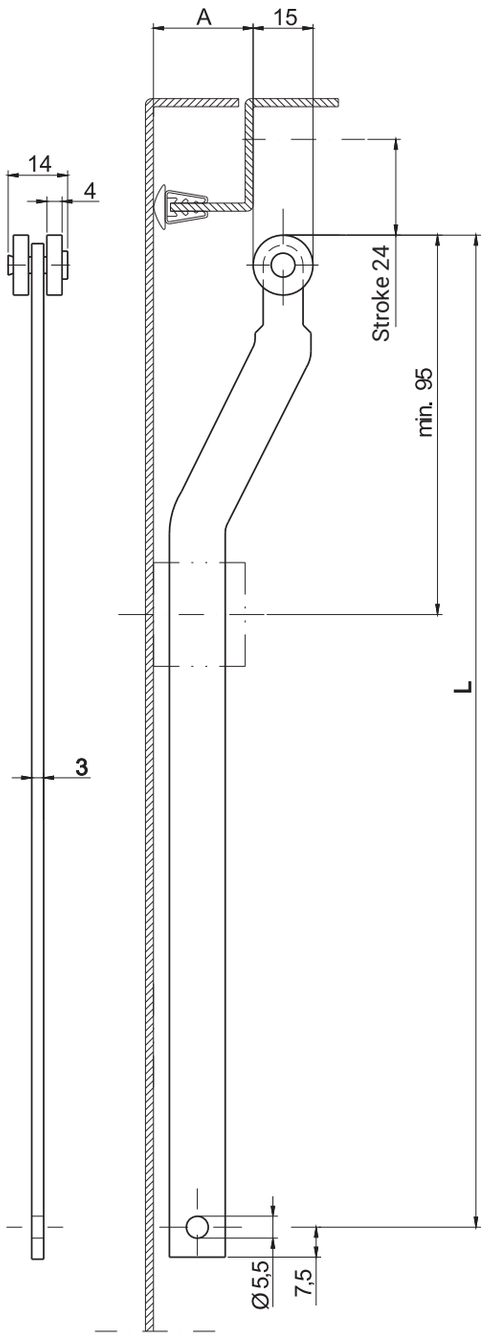

FLAT ROD WITH ROLLERSI A25K - L
(with **square hole**)

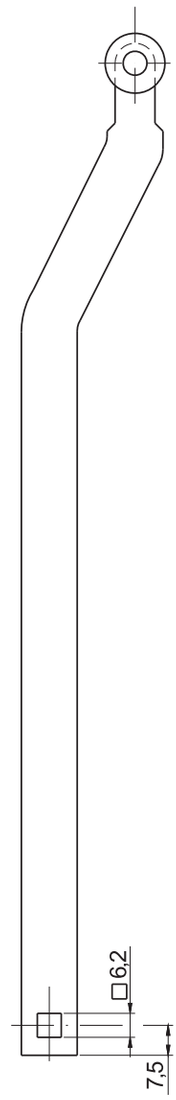

FLAT ROD WITH ROLLERS A25P - L

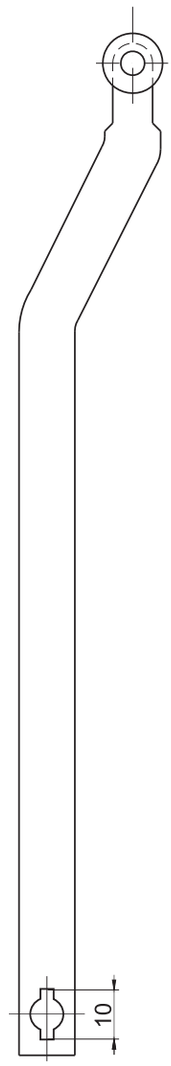

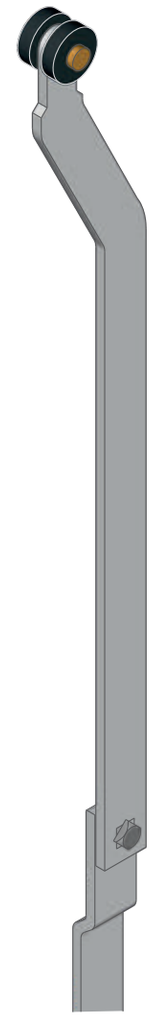

NOTE: Additionally possiblility of ordering rubber profile, page 6-1 to 6-15, 6-10 to 6-11

CAT. NUMBER	NAME	MATERIAL	DIMENSIONS	
			A	L
A20 - L	Flat rod with rollers with **round hole**	Flat rod - steel zinc plated Rolllers - PA6	20	Dimensions negotiable
A25 - L			25	
A20K - L	Flat rod with rollers with **square hole**		20	
A25K - L			25	
A20P - L	Flat rod with rollers **A20P - L, A25P - L**		20	
A25P - L			25	

- ***Fox example:*** *A25K-300 means flat rod 3x14mm, dimension A=25, lenght L=300mm with square hole*
- ***Possibility*** *of producing other flat rod on special request*

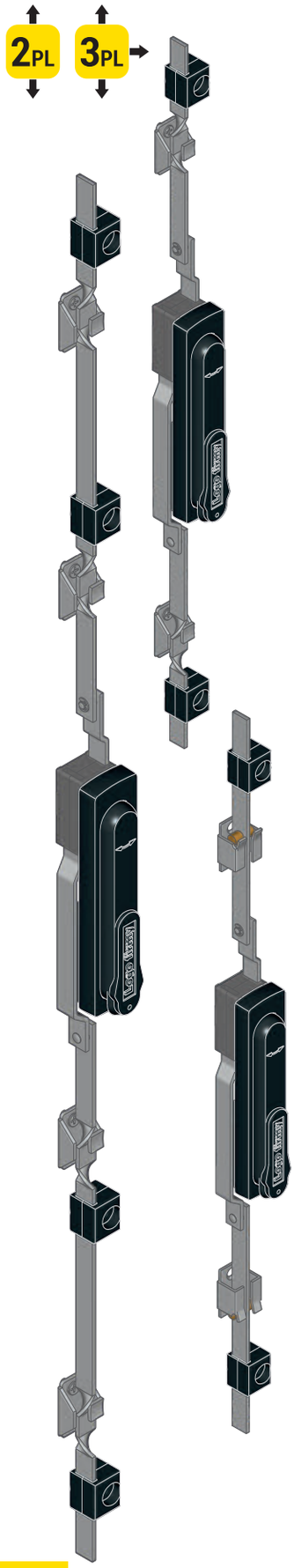
2PL
3PL

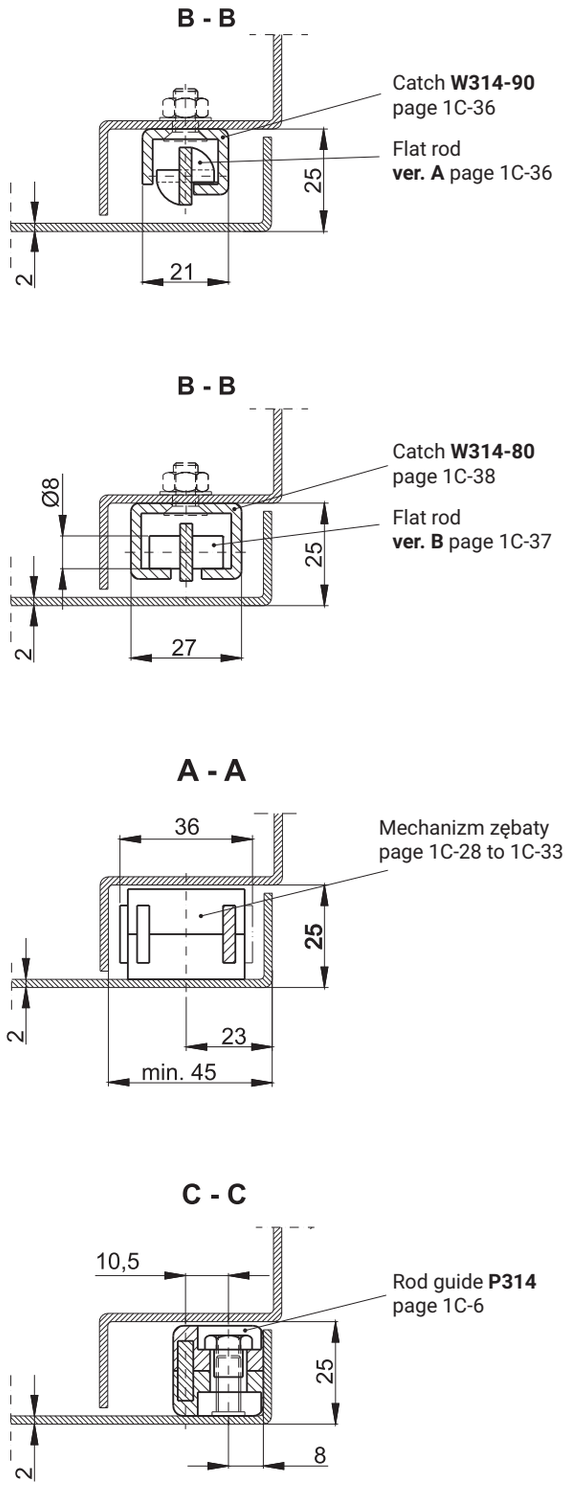
B - B
Catch W314-90
page 1C-36
Flat rod
ver. A page 1C-36
25
2
21
B - B
Catch W314-80
page 1C-38
Flat rod
ver. B page 1C-37
Ø8
25
2
27
A - A
36
Mechanizm zębaty
page 1C-28 to 1C-33
25
2
23
min. 45
C - C
10,5
Rod guide P314
page 1C-6
25
2
8

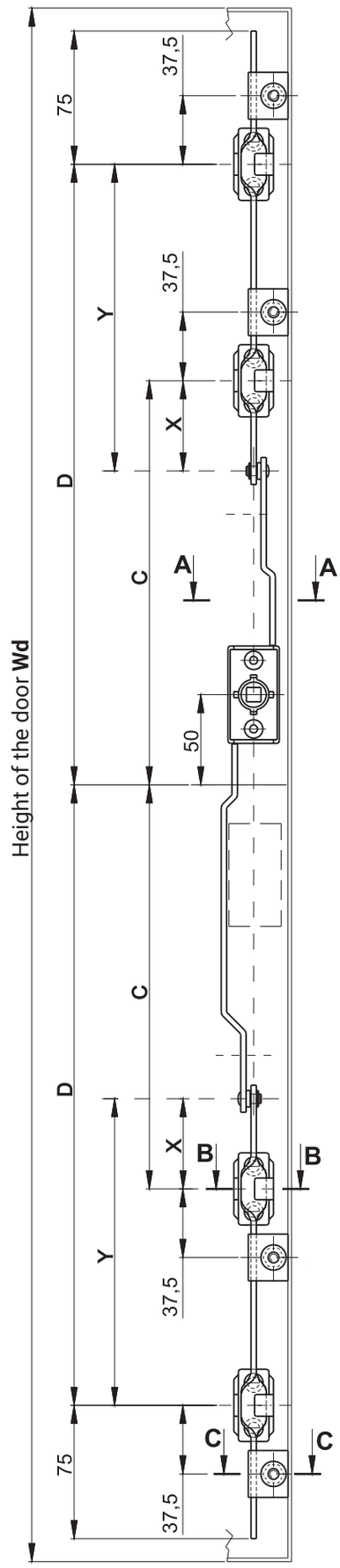
Height of the door Wd
75
37,5
Y
37,5
X
D
C
A
A
50
C
D
X
B
B
Y
37,5
75
C
C
37,5

FLAT ROD
ver. A

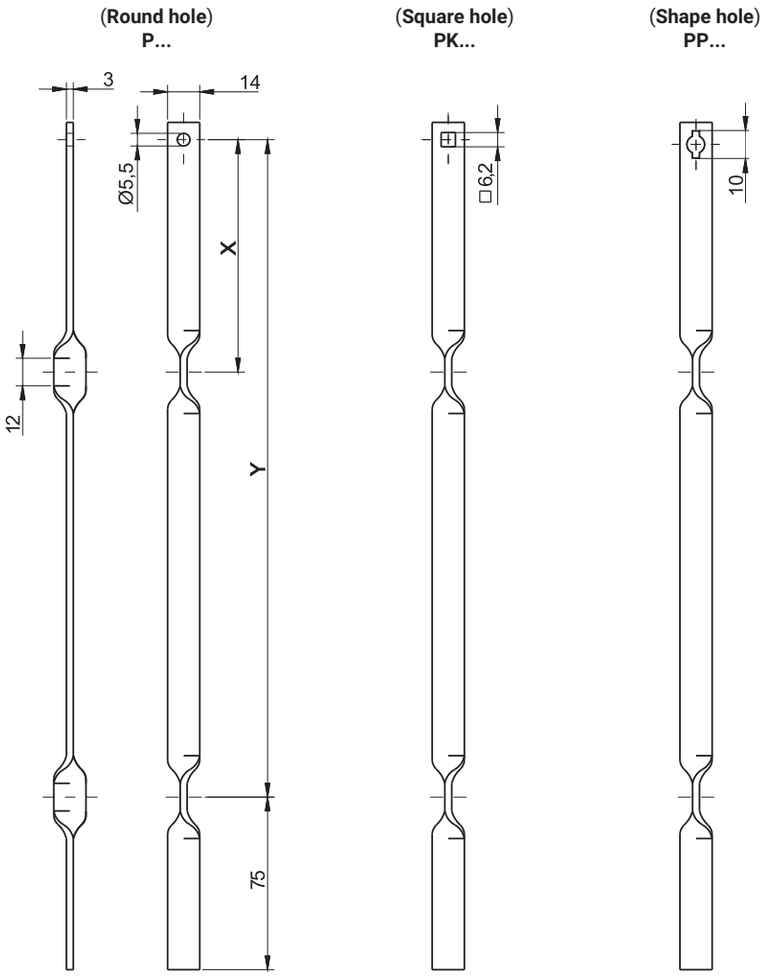

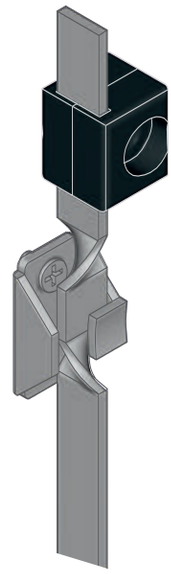

CATCH W314-90
(for Flat Rod ver.A - znal)

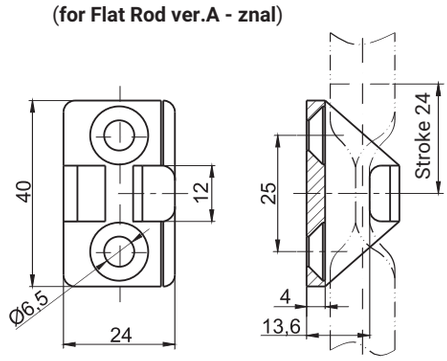

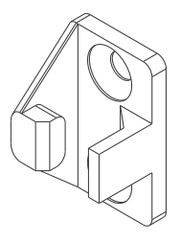

CATALOGUE NUMBER FLAT ROD VER. A			DOOR HEIGHT Wd	DIMENSION TO THE FLAT ROD		DIMENSION TO DOOR CENTER		MATERIAL
Round hole	Square hole	Shape hole		X	Y	C	D	
P190-210	PK190-210	PP190-210	800 - 1200	-	126	-	300	Steel zinc plated
P190-351	PK190-351	PP190-351	1200- 1600	-	276	-	450	
P290-601	PK290-601	PP290-601	1600 - 1900	101	526	275	700	
P290-751	PK290-751	PP290-751	1900 - 2200	101	676	275	850	

CAT. NUMBER	NAME	MATERIAL
1C.907.001	Catch for flat rod ver. A	ZAMAK - powder painted

ROZTOCZE

FLAT ROD
ver. B

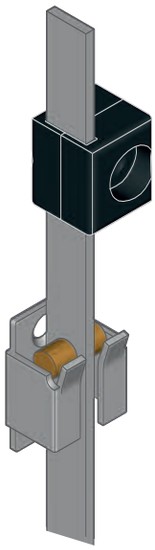

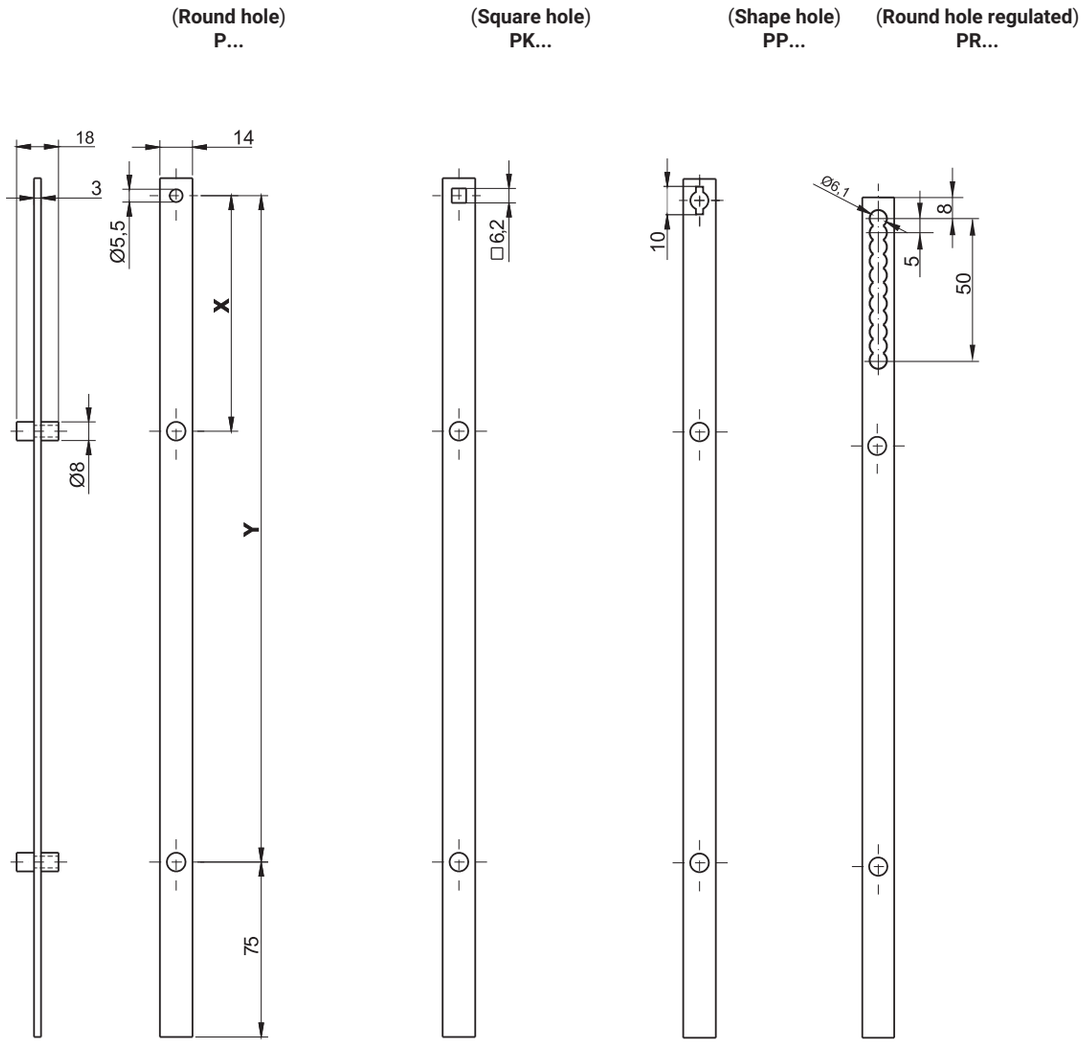

CATALOGUE NUMBER FLAT ROD VER. B			DOOR HEIGHT Wd	DIMENSION OF THE FLAT ROD		DIMENSION TO DOOR CENTER		MATERIAL
Round hole	Square hole	Shape hole		X	Y	C	D	
P18-210	PK18-210	PP18-210	800 - 1200	-	126	-	300	Steel zinc plated
P18-351	PK18-351	PP18-351	1200- 1600	-	276	-	450	
P28-601	PK28-601	PP28-601	1600 - 1900	101	526	275	700	
P28-751	PK28-751	PP28-751	1900 - 2200	101	676	275	850	

Dimensions C and D page 1C-35.

Catch for flat rod ver. B

Distance D314-85

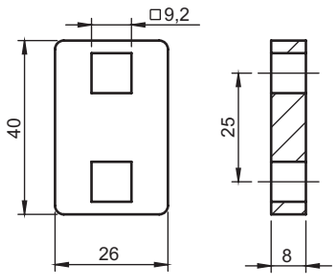

Catch W314-85-A
1C.907.003-A

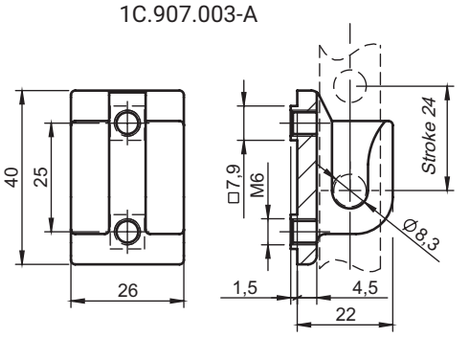

Catch W314-85-D
1C.907.003-D

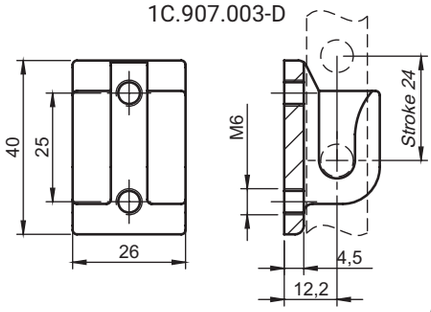

Catch W314-85-C
1C.907.003-C

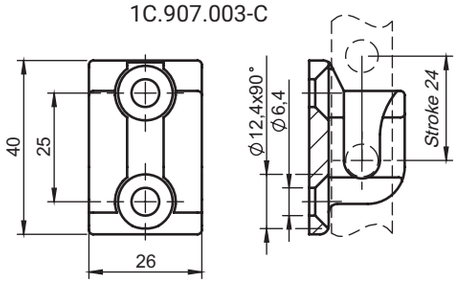

Catch W314-85-B
1C.907.003-B

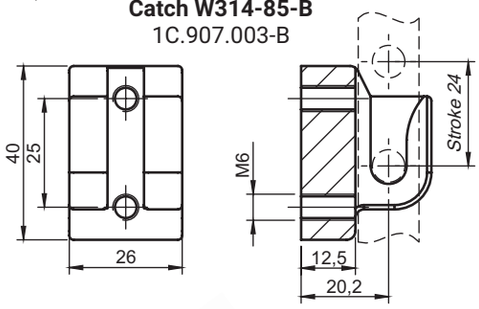

Catch W314-80
1C.907.002

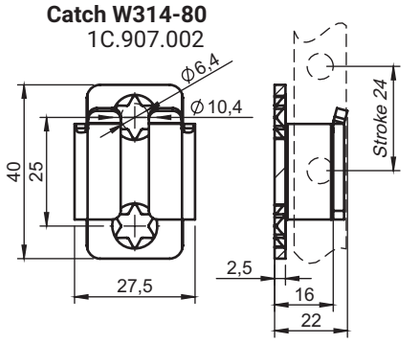

Catch W314-60
1C.907.007

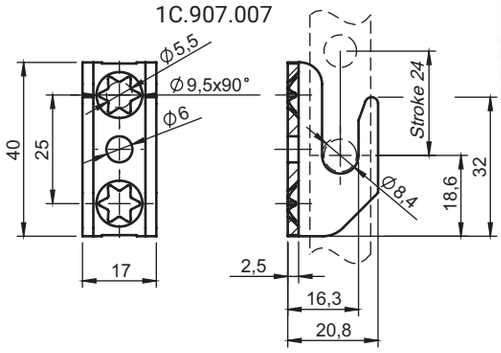

CAT. NUMBER	NAME	MATERIAL
1C.908.001	Distance D314-85 for catch 1C.907.003.001	ZAMAK5
1C.907.003-A	Catch W314-85-A	ZAMAK5
1C.907.003-B	Catch W314-85-B	ZAMAK5
1C.907.003-C	Catch W314-85-C	ZAMAK5
1C.907.003-C SN	Catch W314-85-C	Stainless steel
1C.907.003-D	Catch W314-85-C	ZAMAK5
1C.907.002	Catch W314-80	Steel zinc plated
1C.907.007	Catch W314-60	Steel zinc plated

Flat rods ver. C, Catch W314-70

FLAT ROD ver. C

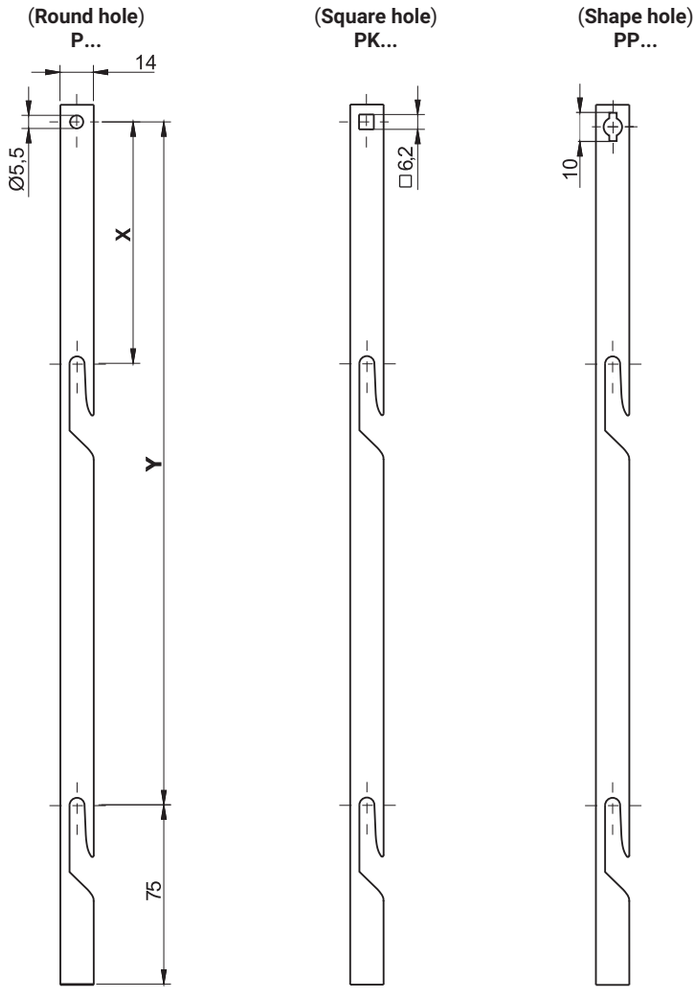

CATCH W314-70

(for Flat Rod **ver. C - steel**)

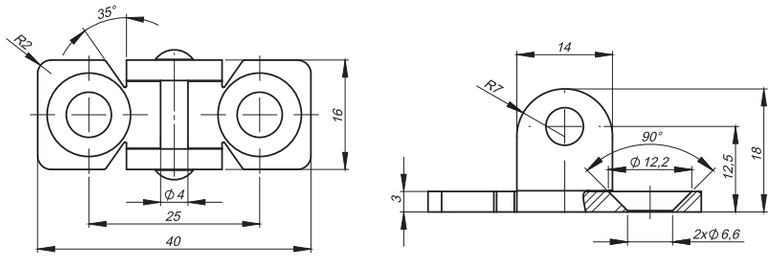

CATALOGUE NUMBER FLAT ROD VER. C			DOOR HEIGHT Wd	DIMENSION OF THE FLAT ROD		DIMENSION TO DOOR CENTER		MATERIAL
Round hole	Square hole	Shape hole		X	Y	C	D	
P390-210	PK390-210	PP38-210	800 - 1200	-	126	-	300	Steel zinc plated
P390-351	PK390-351	PP38-351	1200- 1600	-	276	-	450	
P490-601	PK490-601	PP48-601	1600 - 1900	101	526	275	700	
P490-751	PK490-751	PP48-751	1900 - 2200	101	676	275	850	

CAT. NUMBER	NAME	MATERIAL
1C.907.004	Catch for flat rod ver. C	Steel zinc plated

FLAT ROD
ver. D

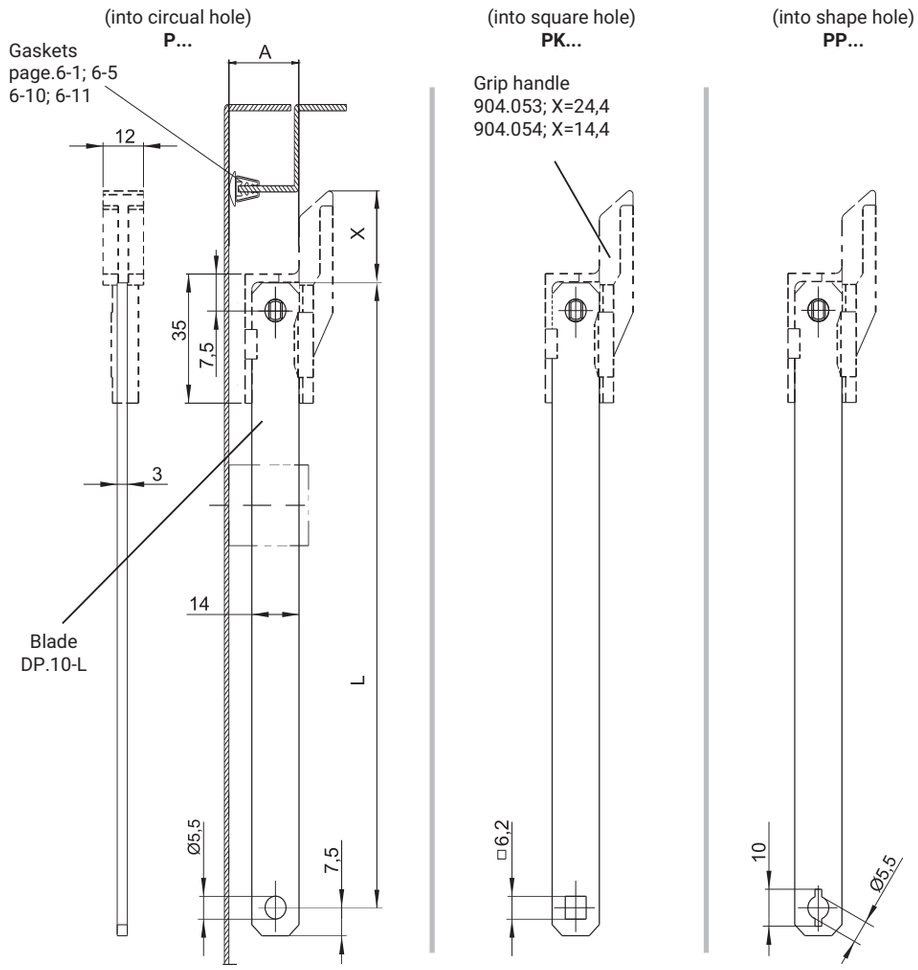

GRIP HANDLE
1C.904.053

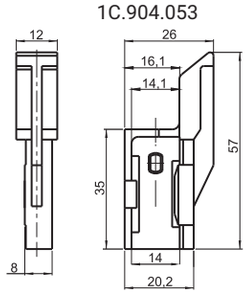

GRIP HANDLE
1C.904.054

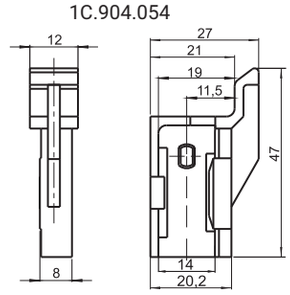

CAT. NUMBER		NAME	DIMENSION		MATERIAL
Steel zinc plated	Steel 1.4301		L		
DP.01 - L	DP.02 - L	Band pressing into circular hole	400 500 600 700 800 900 1000	Other dimensions to be agreed	Band pressing - steel zinc plated, stainless steel
DPK.01 - L	DPK.02 - L	Band pressing into square hole			
DPP.01 - L	DPP.02 - L	Band pressing into shaped hole			
			A		
1C.904.053		Grip handle	17,5		PA-6 RAL9005
1C.904.054			22,5		

- ***Order example:*** *A23K-300 means band pressing 3x14mm, dimension A=23, length of L=300mm into square*
- ***Capability*** *of execution flat according to individual orders*

Multipoint locking system with one flat bar

ROZTOCZE

NEW

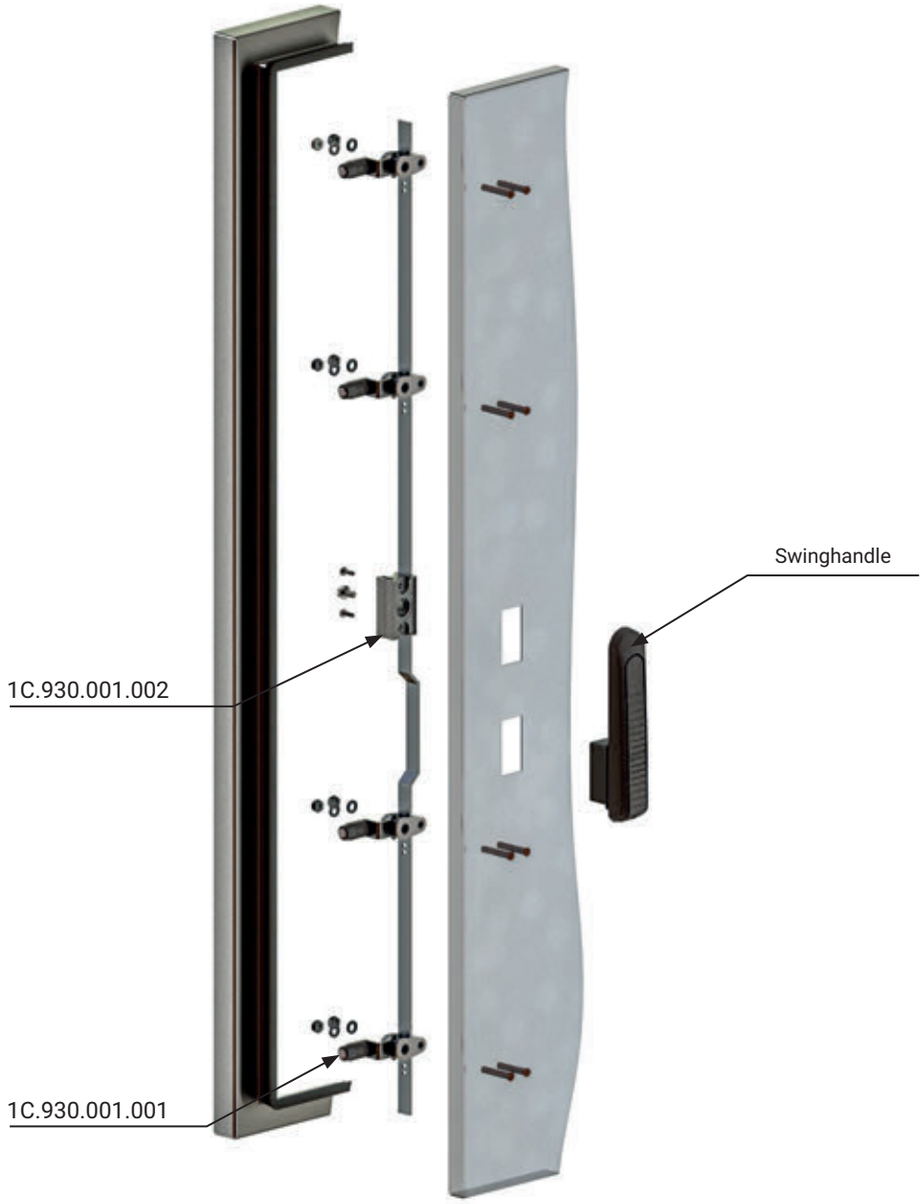

CATALOGUE NUMBER	DESCRIPTION	COMPONENTS	MATERIAL
1C.930.001.001	Bolt	Roll	POM
		Cam	Steel zinc plated
1C.930.001.002	Cogweel mechanism with flat rod	Housing	ZAMAK
		Flat rod	Steel zinc plated

How to order :

1C.930.001.002 — L1 — L2 — L3 — L4

Catalogue number

** distance between locks

**for the 1C.390.001.002 detail, the lengths L1, L2, L3 and L4 must be additionally specified in case of a 2-point system, indicate only the lengths L1 and L2

Individual system components to be ordered separately

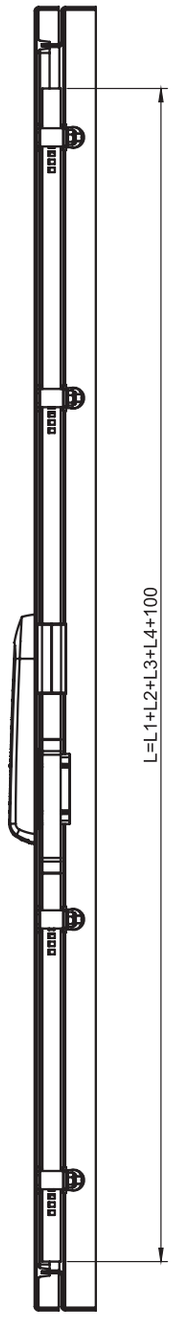

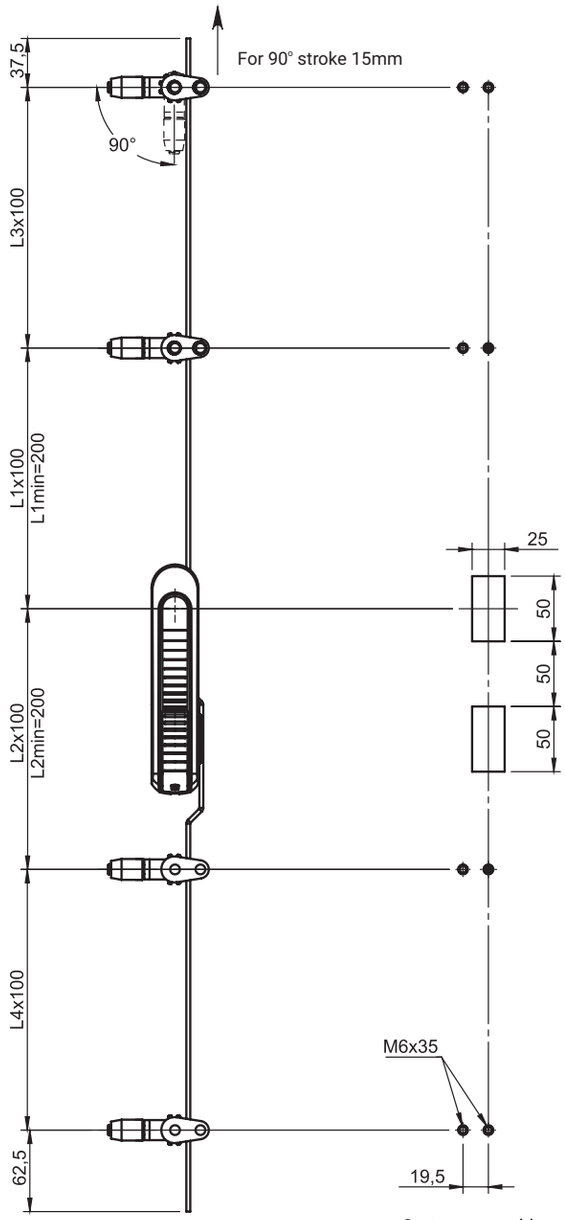

System assembly
View from inside the door

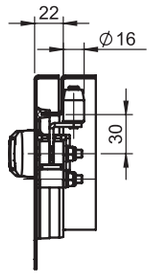

For 2-point system L3 and L4=0
Maximum total length of flat bar L = 2000mm
The system works with all locks for the mounting hole 50x50x50x50

Adapter 1C.916

1C.916.001

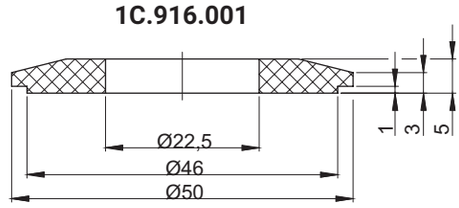

1C.916.002

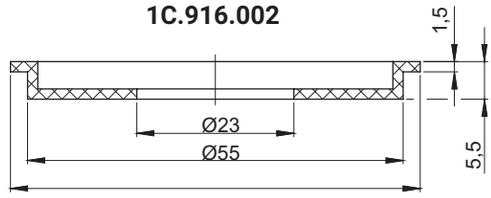

1C.916.003

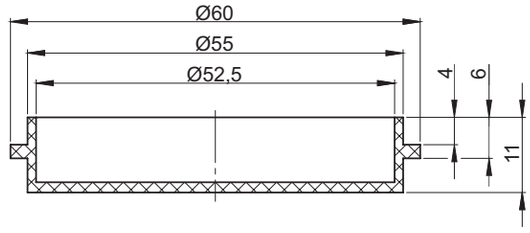

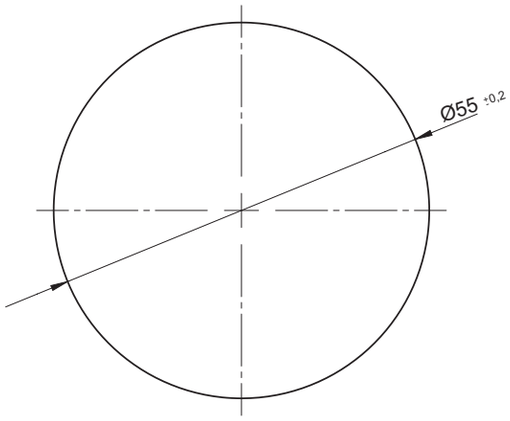

Cut out 1C.916.002 i 1C.916.003

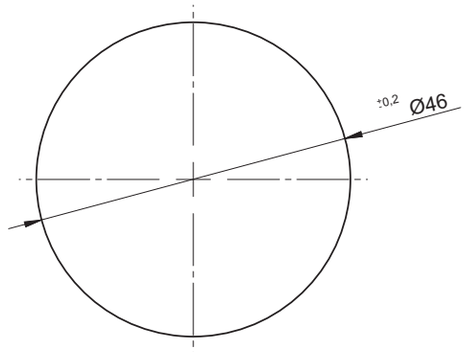

Cut out 1C.916.001

CATALOGUE NO.	DETAIL	MATERIAL
1C.916.001	Adapter RS Ø23-Ø46	Polyamide
1C.916.002	Adapter RS Ø23-Ø55	
1C.916.003	Adapter RS Ø55	

1 Locking systems
2 Locks Latches
3 Hinges
4 Clamps
5 Accessories
6 Gasketing profiles
7 Custom products

Explanation of open fields

Locks in the closed position
arrow indicates the direction of opening

LOCKS FOR LEFT DOORS

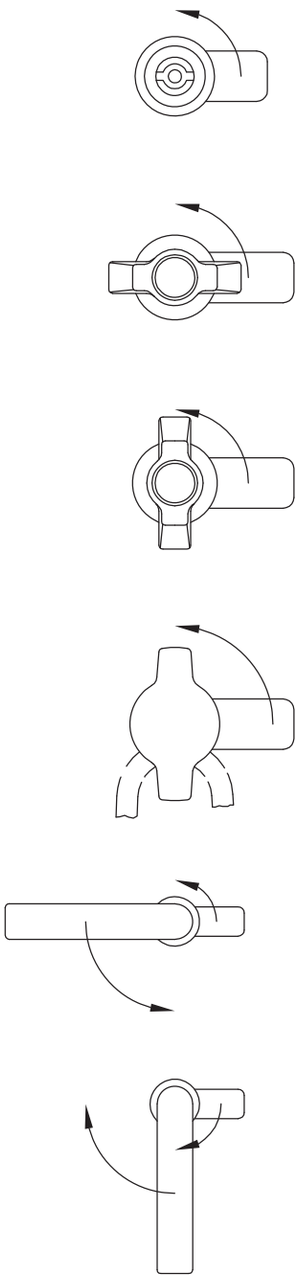

LOCKS FOR RIGHT DOORS

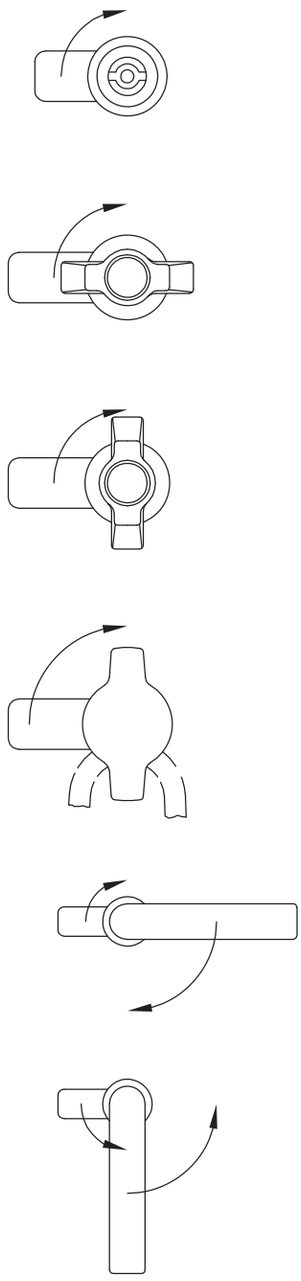

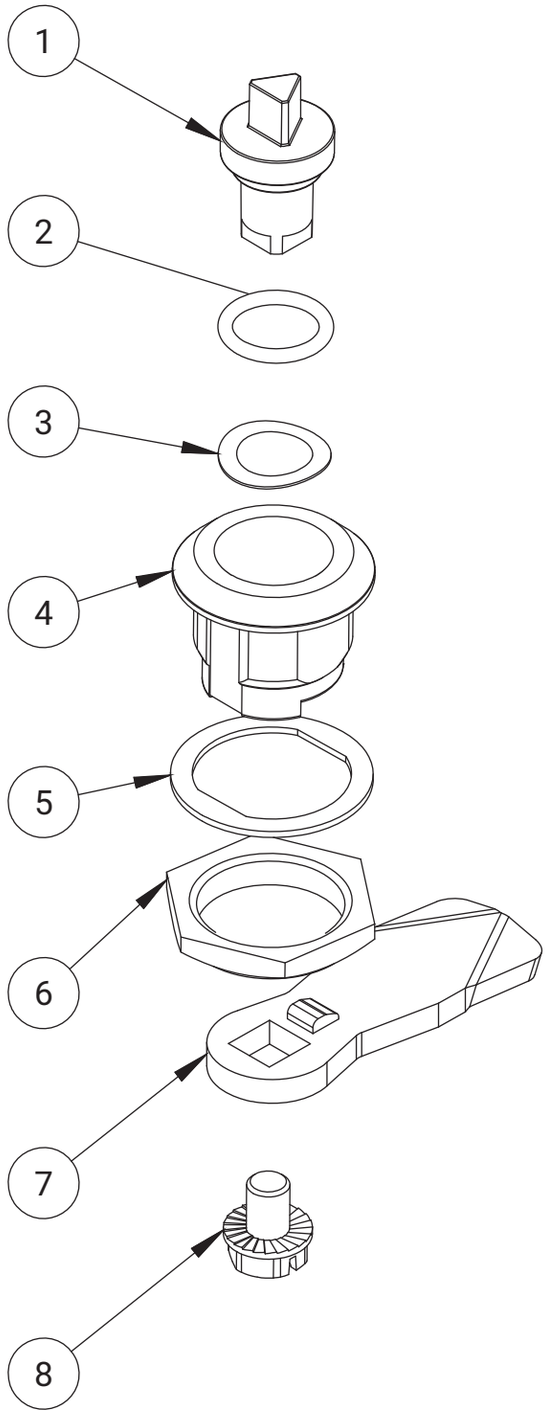

where :
1 - Insert
2 - O-ring for IP 65
3 - Wave washer
4 - Housing
5 - Flat seal for IP 65 and IP 66
6 - Nut M22
7 - Cam
8 - Screw M6

Overview of lock inserts M22

ROZTOCZE

INSERT

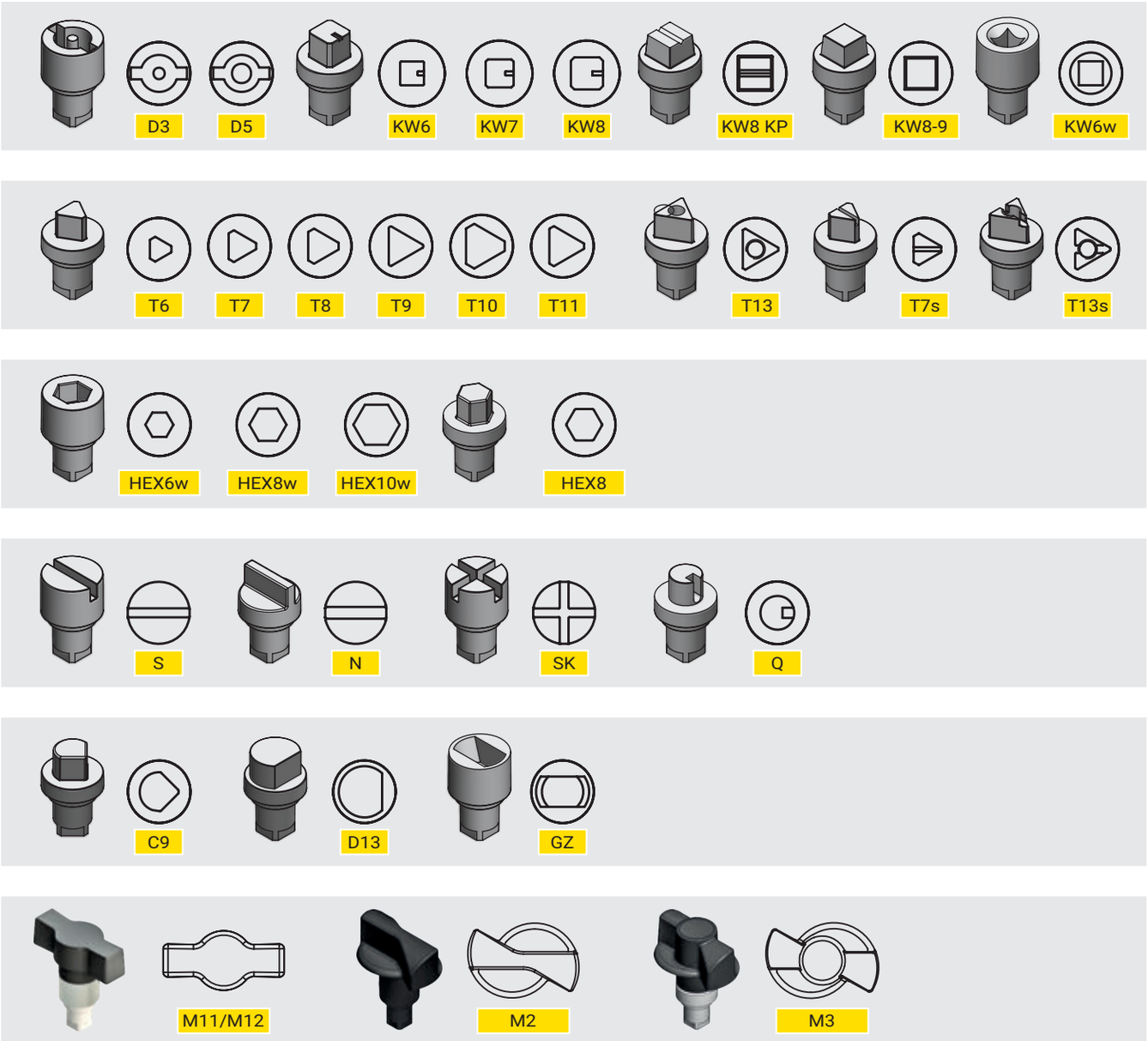

INSERT PATENT WITH CODE KEY:	
	1333
	RK - different key code
	1242E
	405E
	455E
	2342E
	MS - Master Key

Lock M16, M16/45, 2.602

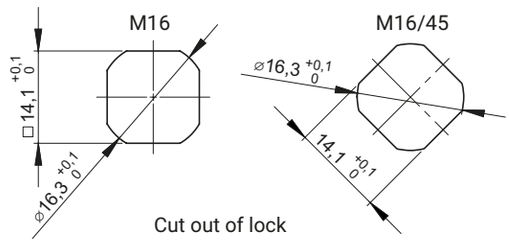

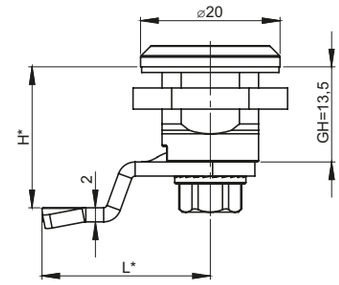

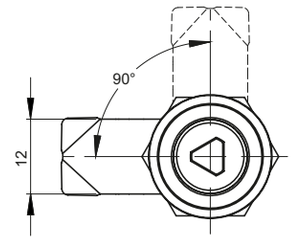

Material for insert [D]	INSERTS AVAILABLE						
	T6	T7	T7S	S	N	KW6	HEX
ZAMAK 5	11	12	13	14	-	16	17
Brass	21	-	-	-	25	-	-

TYPE OF LOCK							
M16				M16/45			
MATERIAL TYPE FOR HOUSING AS WELL AS PROTECTIVE COATING FOR HOUSING AND INSERT [C]							
ZAMAK 5						Stainless steel	
Chrome	Nickel	Zinc plated	RAL 9005	RAL 7035	No coating	304	316
01	02	03	04	05	0	9.1	9.2
TYPE OF NUT [N]						Stainless steel	
Steel						304	316
13						14	15

How to order :

M16/45 — C.N — T7.C.D — H — L

- Type of lock
- Type of housing
- Type of insert
- The height of cam H
- The lenght of cam L

Available height of cam H = 13,5; 20
Available lenght of cam L = 23; 25
For the housing made of stainless steel, the insert is also made of tha same material
* Possibility to order in a different dimension

meaning: C - marking of material for housing as well as surface finish for housing and insert
H.G - cam bended dimension

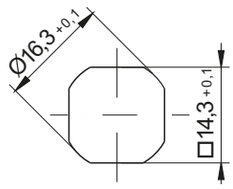

Cut Out

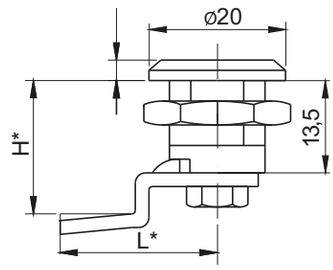

INSERTS	FINISH [C]
	RAL 9005
SK	04

NAME	COMPONENTS	MATERIAL
Lock 2.602.001	Housing, insert	ZAMAK5
	Cam	Steel zinc plated

Lock M16-19

ROZTOCZE

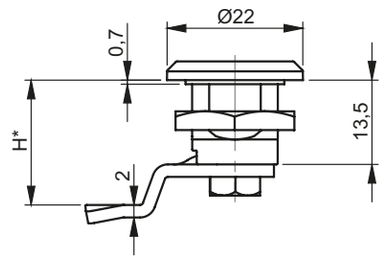

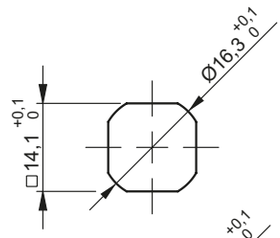

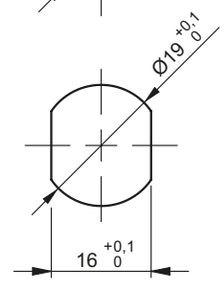

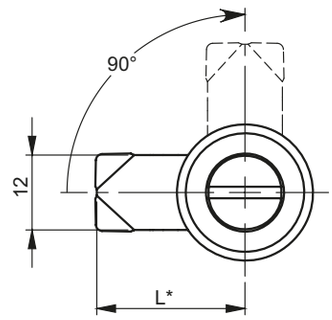

Material for insert [D]	INSERTS AVAILABLE						
	T6	T7	T7S	S	N	KW6	HEX
ZAMAK 5	11	12	13	14	-	16	17
Brass	21	-	-	-	25	-	-

TYPE OF LOCK							
M16-19							
MATERIAL TYPE FOR HOUSING AS WELL AS PROTECTIVE COATING FOR HOUSING AND INSERT [C]							
ZAMAK 5						Stainless steel	
Chrome	Nickel	Zinc plated	RAL 9005	RAL 7035	No coating	304	316
01	02	03	04	05	0	9.1	9.2
TYPE OF NUT [N]						Stainless steel	
Steel						304	316
13						14	15

How to order :

M16-19 — C.N — T7.C.D — H — L

- Type of lock
- Type of housing
- Type of insert
- The height of cam H
- The lenght of cam L

Height dimension of a CAM H for a body 13,5mm-mounting in hole Ø19x16,
in case of mounting in hole Ø16x14 the height H decreases about 0,7mm.
Mounting options:
- Ø16x14
- Ø19x16

* different dimensions available

Lock M19-1

NEW

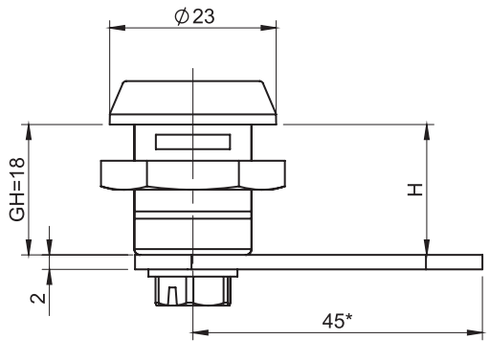

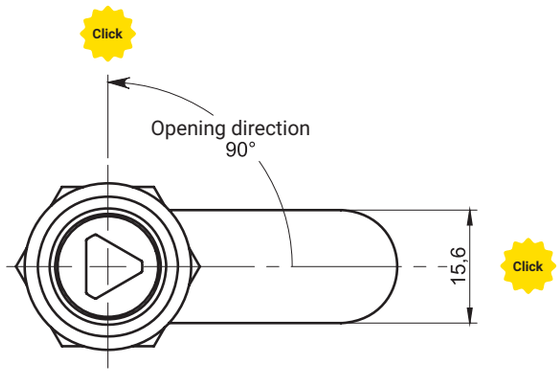

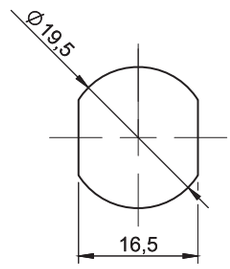

Mounting hole

CATALOGUE NUMBER	COMPONENTS	MATERIAL
M19-1	Housing, Insert	ZAMAK
	Cam	Steel zinc plated

INSERT [X]		FINISH [C]				
		Chrome	Nickel	Galvanized	RAL9005	RAL7035
KW8	T8	01	02	03	04	05

How to order:

M19-1 — KW8.04 — 18 — L

Catalogue number
Type of insert [X]
Finish [C]
Locking height, H=18, 20, 22
Version (P-right, L-left)

The drawing shows the left-hand version. The right-hand version is a mirror reflection.
* possibility to order in another dimension

Lock M22-1

ROZTOCZE

IP65

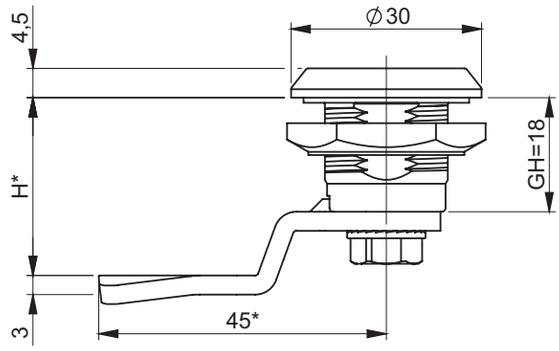

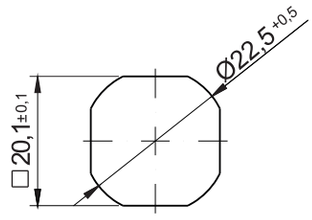

Mounting hole

FINISHING TYPE OF THE INSERT AND THE BODY [C]									
ZAMAK 5						Polyamide		Stainless steel	
Chrome	Nickel	Galvanized	RAL 9005	RAL 7035	No coating	RAL 9005	RAL 7035	304	316
01	02	03	04	05	0	-	-	9.1	-

THE TYPE OF THE NUT [N]					
	ZAMAK 5	Polyamide	Steel	Stainless steel	
				304	316
Nut without grounding	11	12	13	14	15
Nut with grounding	21	-	23	24	25

Type of the material of the insert	INSERTS AVAILABLE			
	D3	D5	T9	KW 8
ZAMAK 5	●	●	●	●

How to order: M22-1 — C.N — T9.C — H.G — IP65

- Type of lock
- Type of body
- Type of insert
- Type of cam
- Klasa IP65

where C,N, G stand for:

C - type of the material and finishing of the surface
N - type of nut
H.G - the cam unbending dimension to be chosen from pages 1C-9 to 1C-22

Notice:
Lock M22-1 is compatible with all cams from range : 11, 12, 13, 14, 31, 32, 18, 33, 34, 38, JZ-002, JK-1610

IP65

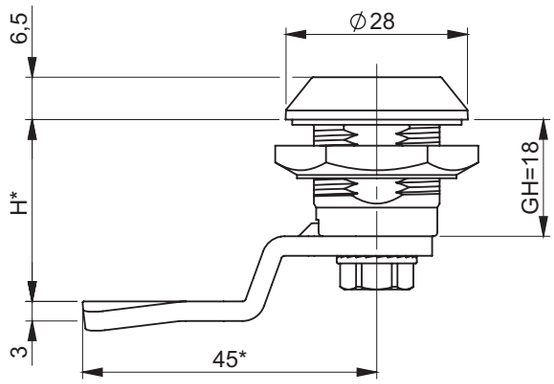

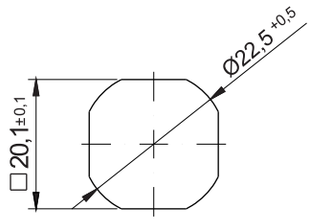

Mounting hole

FINISHING TYPE OF THE INSERT AND THE BODY [C]									
ZAMAK 5						Polyamide		Stainless steel	
Chrome	Nickel	Galvanized	RAL 9005	RAL 7035	No coating	RAL 9005	RAL 7035	304	316
01	02	03	04	05	0	7	8	9.1	-

THE TYPE OF THE NUT [N]					
	ZAMAK 5	Polyamide	Steel	Stainless steel	
				304	316
Nut without grounding	11	12	13	14	15
Nut with grounding	21	-	23	24	25

Type of the material of the insert	INSERTS AVAILABLE										
	D3	D5	T8	T9	KW 8	S	N	C9	HEX	T13	T13S
ZAMAK 5	●	●	●	●	●	●	●	●	●	●	●

How to order: M22-2 — C.N — T9.C — H.G — IP65

- Type of lock
- Type of body
- Type of insert
- Type of cam
- IP65 class

where C,N, G stand for:

C - type of the material and finishing of the surface

N - type of nut

H.G - the cam unbending dimension to be chosen from pages 1C-9to 1C-22

Notice:

Lock M22-2 is compatible with all cams from range : 11, 12, 13, 14, 18, 31, 32, 33, 34, 38, JZ-002, JK-1610

Lock M22-3

ROZTOCZE

IP65 **IP66****

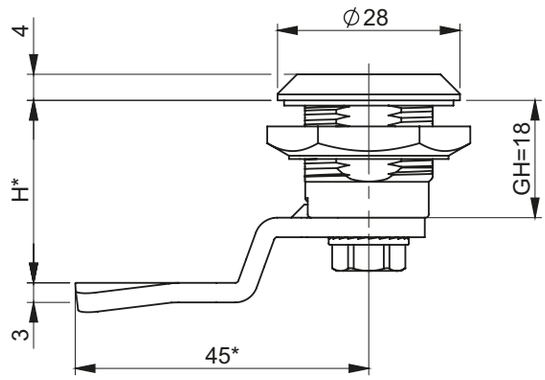

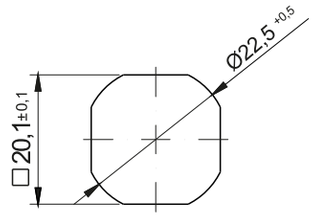

Mounting hole

FINISHING TYPE OF THE INSERT AND THE BODY [C]										
ZAMAK 5							Polyamide		Stainless steel	
Chrome	Nickel	Galvanized	RAL 9005	RAL 7035	KTL****	No coating	RAL 9005	RAL 7035	304	316
01	02	03	04	05	06	0	07	08	9.1	9.2

THE TYPE OF THE NUT [N]					
	ZAMAK 5	Polyamide	Steel	Stainless steel	
				304	316
Nut without grounding	11	12	13	14	15
Nut with grounding	21	-	23	24	25

Type of the material of the insert		INSERTS AVAILABLE											
		D3	D5	T8	T9	KW 8	S	HEX8	HEX10	M11	M12	M2	M3
ZAMAK 5		●	●	●	●	●	●	●	●	***		***	***
Polyamide		●	●	-	●	●	●	-	-				
Stainless steel	304	●	●	●	●	●	●	-	-				
	316	●	●	●	●	●	●	-	-				

* Possibility to order in another dimension
** Lock for special request.
*** Precise description of inserts M1, M2, M3, check pg. 2A-10
**** applies only to the body

How to order:

M22-3 — C.N — T9.C — H.G — IP65

Type of lock
Type of body
Type of insert
Type of cam
IP65/IP66** class

where C,N, G stand for:

C - type of the material and finishing of the surface
N - type of nut
H.G - the cam unbending dimension to be chosen from pages 1C-9 to 1C-22

Notice:
Lock M22-3 is compatible with all cams from range : 11, 12, 13, 14, 18, 31, 32, 33, 34, 38, JZ-002, JK-1610

Butterfly knobs for M22-3 lock

Type M11/M12

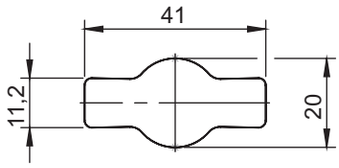

Type M11/M12

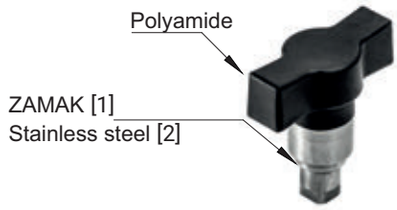

Type M2

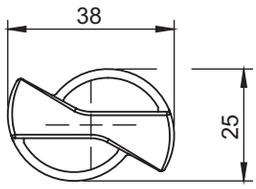

Type M2

Type M3

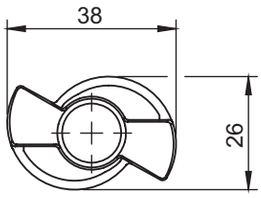

Type M3

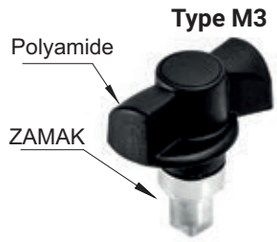

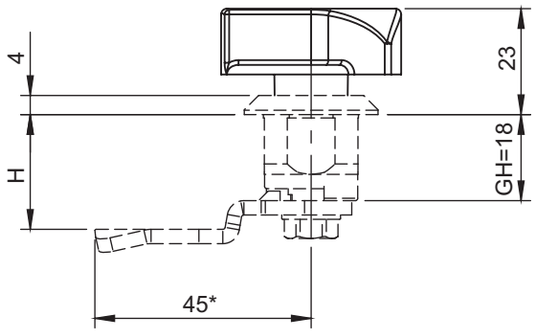

M11, M12, M2 and M3 butterfly knobs are compatible with M22-3 lock - page 2A-9

TYPE	Material		Knob finish [D]	
	Insert	Knob	RAL 9005	RAL 7035
M11	ZAMAK	Polyamide	07	08
M12	Stainless steel	Polyamide		
M2	Polyamide	Polyamide		
M3	ZAMAK	Polyamide		

Lock M22-DU

ROZTOCZE

IP65

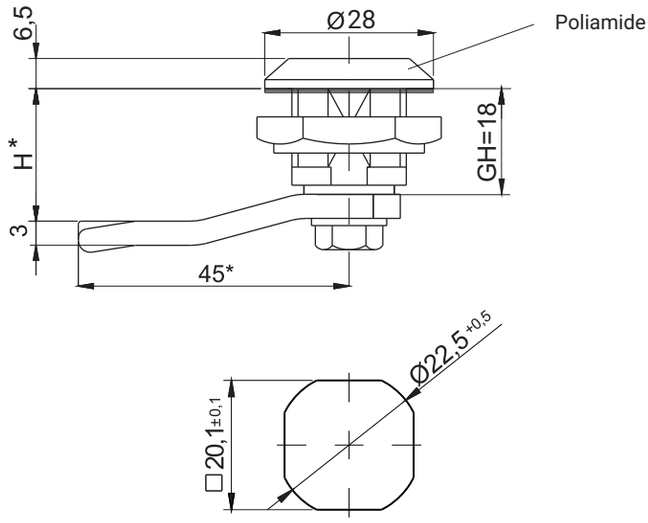

TYPE OF MATERIAL AND PROTECTIVE COATING [C]									
INSERT								HOUSING COLOR[K]	
ZAMAK 5						Polyamide		Polyamide	
Chrome	Nickel	Galvanized	RAL 9005	RAL 7035	No coating	RAL 9005	RAL 7035	RAL 9005	RAL 7035
1	2	3	4	5	0	7	8	7	8

THE TYPE OF THE NUT [N]					
	ZAMAK 5	Polyamide	Steel	Stainless steel	
				304	316
Nut without grounding	11	12	13	14	15
Nut with grounding	21	-	23	24	25

Type of the material of the insert	INSERTS AVAILABLE										
	D3	D5	T8	T9	KW 8	S	N	C9	HEX	T13	T13S
ZAMAK 5	●	●	●	●	●	●	●	●	●	●	●
Polyamide	●	●		-	-	●	-	-	-	-	-

How to order:

M22-DU — K.N — T9.C — H.G — IP65

Type of lock
Type of body
Type of insert
Type of cam
IP65 class

where C,N, G stand for:

C - type of the material and finishing of the surface
N - type of nut
H.G - the cam unbending dimension to be chosen from pages 1C-9 to 1C-22

Notice:
Lock M22-DU is compatible with all cams from range : 11, 12, 13, 14, 18, 31, 32, 33, 34, 38, JZ-002, JK-1610
Possibility of purchasing the lock with the grounding element.
The body of the is available only in configuration of polyamide.

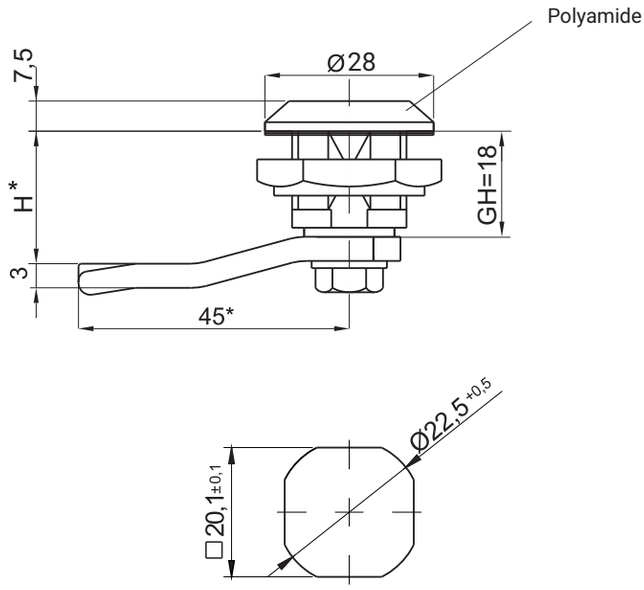

Mounting hole

TYPE OF LOCK	COMPONENTS	MATERIAL	FINISH [C]	
			RAL 9005	RAL 7035
M22D	Housing, Insert	Polyamide	07	08
	Cam	Steel zinc plated	-	-

INSERT
GZ

The type of the nut [N]					
	ZAMAK 5	Polyamide	Steel	Stainless steel	
				304	316
Nut without grounding	11	12	13	14	15
Nut with grounding	21	-	23	24	25

How to order:

M22D — C.N — GZ.C — H.G

Type of lock
Type of body
Type of insert
Type of cam

where C,N, G stand for:

C - type of the material and finishing of the surface
N - type of nut
H.G - the cam unbending dimension to be chosen from pages 1C-9 to 1C-22

Notice:
Lock M22D is compatible with all cams from range: 15, 16, 17, 19, 21, 35, 36, JK, JP
Possibility of purchasing the lock with the grounding element.
The body of the is available only in configuration of polyamide.

Lock M22P

ROZTOCZE

IP65

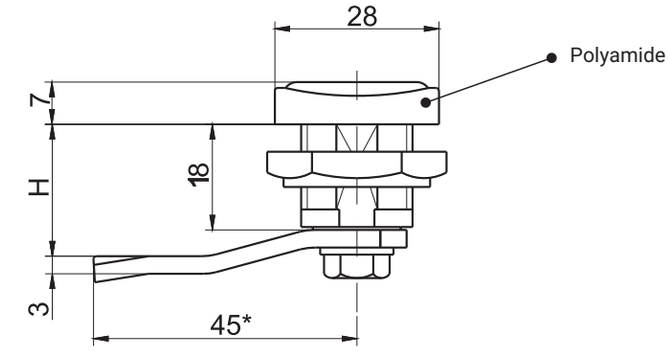

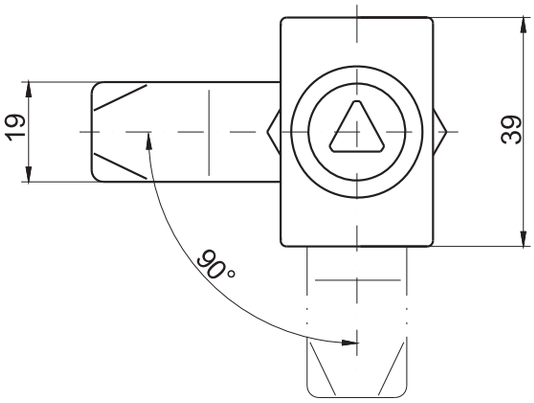

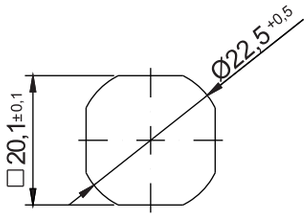

Mounting hole

TYPE OF MATERIAL AND PROTECTIVE COATING [C]									
INSERT								HOUSING COLOR [K]	
ZAMAK 5						Polyamide		Polyamide	
Chrome	Nickel	Galvanized	RAL 9005	RAL 7035	No coating	RAL 9005	RAL 7035	RAL 9005	7035
01	02	03	04	05	00	07	08	07	08

THE TYPE OF THE NUT [N]					
	ZAMAK 5	Polyamide	Steel	Stainless steel	
				304	316
Nut without grounding	11	12	13	14	15
Nut with grounding	21	-	23	24	25

The body of the is available only in configuration of polyamide.

Type of the material of the insert	INSERTS AVAILABLE											
	D3	D5	T8	T9	T10	T11	T13	KW 8	S	N	C9	HEX
ZAMAK 5	●	●	-	●	●	●	●	●	●	●	●	●
Polyamide	●	●	-	-	-	-	-	-	-	-	-	-

How to order:

M22P — K.N — T9.C — H.G

Type of lock
Type of body
Type of insert
Type of cam

where: C - type of the material and finishing of the surface
N - type of nut
H.G - the cam unbending dimension to be chosen from pages 1C-9 to 1C-22

Notice:
Lock M22P is compatible with all cams from range: 15, 16, 17, 19, 21, 35, 36,

IP66

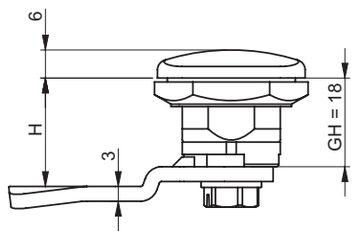

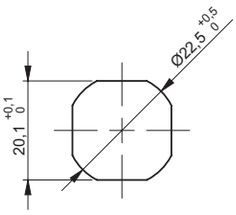

Cut out

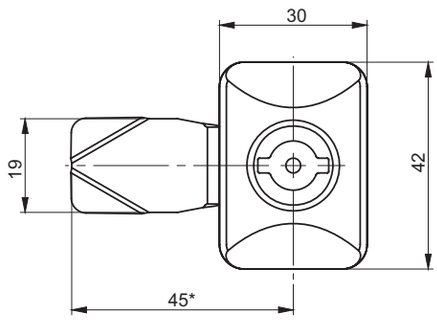

TYPE OF MATERIAL AND PROTECTIVE COATING OF THE INSERT [C]										HOUSING COLOR [K]	
ZAMAK 5						Polyamide		Stainless steel		Polyamide	
Chrom	Nikiel	Ocynk	RAL 9005	RAL 7035	No coating	RAL 9005	RAL 7035	304	316	RAL 9005	RAL 7035
01	02	03	04	05	00	07	08	9.1	9.2	07	08

THE TYPE OF THE NUT [N]					
	ZAMAK 5	Polyamide	Steel	Stainless steel	
				304	316
Nut without grounding	11	12	13	14	15
Nut with grounding	21	-	23	24	25

Type of the material of the insert		INSERTS AVAILABLE							
		D3	D5	T8	T9	KW 8	S	HEX 8 inner	HEX 10 inner
ZAMAK 5		●	●	●	-	●	●	●	●
Polyamide		●	●	-	●	●	●	-	-
Stainless steel	304	●	●	●	●	●	●	-	-
	316	●	●	●	●	●	●	-	-

How to order:

M22-5 — K.N — T9.C — H.G — IP65

Type of lock
Type of body
Type of insert
Type of cam
IP class

where: C, D - type of the material and finishing of the surface
N - type of nut
H.G - the cam unbending dimension (H-locking height, G-group)
to be chosen from pages 1C-9 to 1C-22

Notice:
Lock M22-5 is compatible with all cams from range: 11, 12, 13, 14, 18, 31, 32, 33, 34, 38, JZ-002, JK-1610

Lock M22GP4, M22GP5

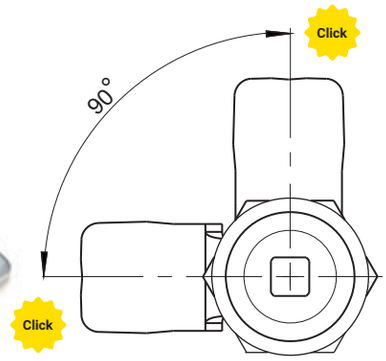

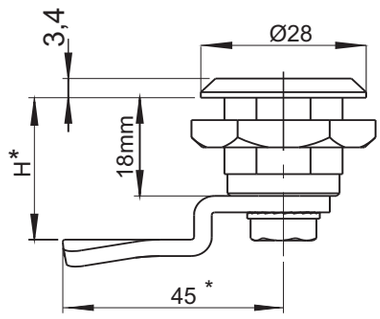

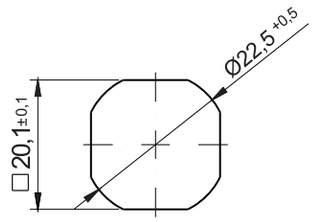

Cut Out

Comments:
Opening and closing the lock is signaled the sound effect

INSERT				INSERT FINISH [C]				HOUSING FINISH [K]	
				Chrome	Nickel	RAL 9005	RAL 7035	RAL 9005	RAL 7035
D5	T9	KW8	KW8 inner	01	02	04	05	07	08

NAME	COMPONENTS	MATERIAL
Lock M22GP4	Housing	Polyamide
	Insert	ZAMAK5
	Cam	Steel zinc plated

How to order :

M22GP4 — K — T9.C — H.G

- Type of lock
- Type of housing
- Type of insert
- Type of cam

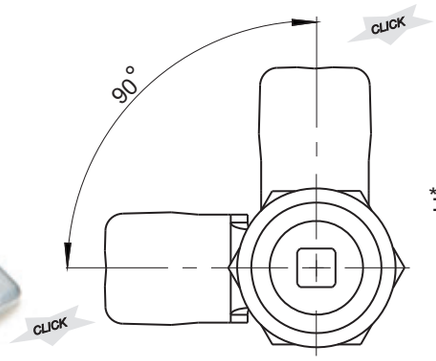

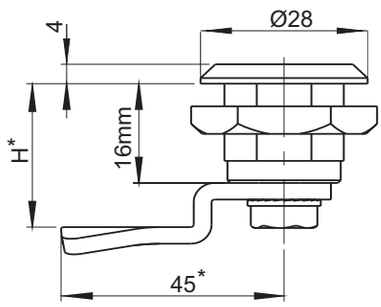

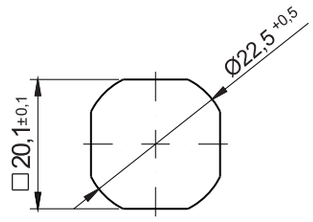

Cut Out

Comments: Opening and closing the lock is signaled the sound effect

INSERT				FINISH [C]			
				Chrome	Nickel	RAL 9005	RAL 7035
D5	T9	KW8	KW8 inner	01	02	04	05

NAME	COMPONENTS	MATERIAL
Lock M22GP5	Housing, insert	ZAMAK5
	Cam	Steel zinc plated

How to order :

M22GP5 — T9 — 18 — C

- Type of lock
- Type of insert
- Height of cam H= 18, 21, 24 (1C-9 to 1C-22)
- Finish

* possibility to make in another dimension
If you order a custom cam, please contact your dealer for further details.

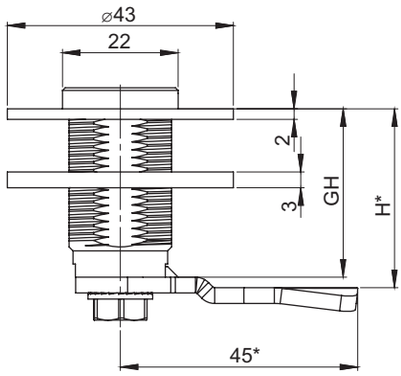

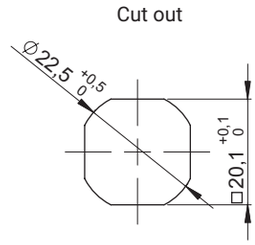

M22KW

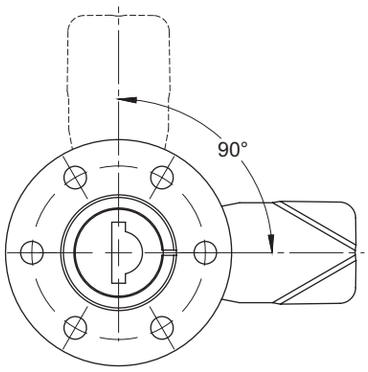

M22K / M22K15

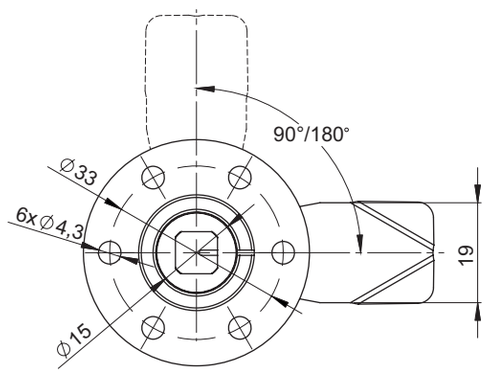

Lock in the left-hand version of the door,
right-hand version is a mirror reflection

KEY CODE					
1333	405E	455E	1242E	2342E	RK

INSERTS				FINISH [C]		
				Chrome	Nickel	RAL 9005
T9	T10	KW 8	S	01	02	04

TYPE OF LOCK	GH	COMPONENTS	MATERIAL
M22K, M22KW	32	Housing, Insert	ZAMAK5
		Cam	Zinc plated steel
M22KSN		Housing, Insert, Cam	Stainless steel
M22K15	15	Housing, Insert, Cam	Zinc plated steel
M22K15SN		Housing, Insert, Cam	Stainless steel

How to order :

M22K — T9 — H.G. — 02 — 90 — L

- Type of lock
- The type of insert (M22K) / key code (M22KW)
- The height of cam H
- Finish [C]
- Opening angle (90°, 180°)
- Type of lock (L-Left, R-Right)

Lock at the height of GH=15mm is available only in a version with shaped insert
The lock is fitted with cams from the group: 12, 14, 21, 32, 34
(pg. 1C-10, 1C-11, 1C-15, 1C-17, 1C-18).
* Possibility to order in a different dimension

Lock M22B

ROZTOCZE

IP65

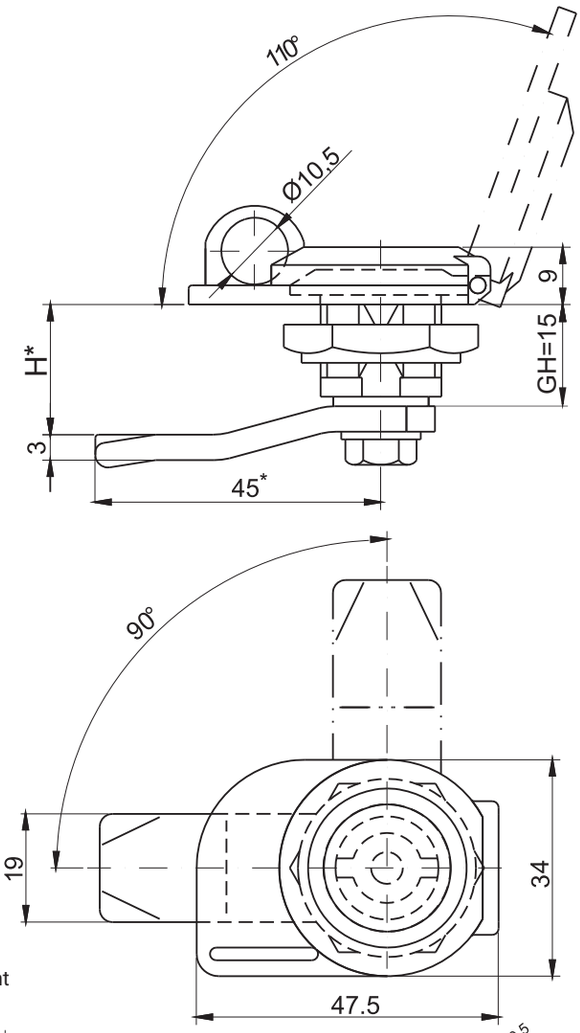

Version

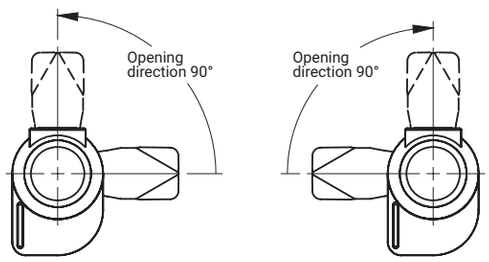

INSERT							FINISH [C]			
							Chrome	Nickel	RAL 9005	RAL 7035
D3	D5	T9	T10	KW 8	S	N	01	02	04	05

NAME	COMPONENTS	MATERIAL
Lock M22B	Housing, insert	ZAMAK5
	Cam	Steel zinc plated
	Blocade	Stainless steel

How to order : M22/B — T9 — 15 — C — L

- Type of lock
- Type of insert
- Height of cam H =15, 18, 21, 26
- Finish
- Type of lock (RH - Right, LH-Left)

* possibility to make in another dimension

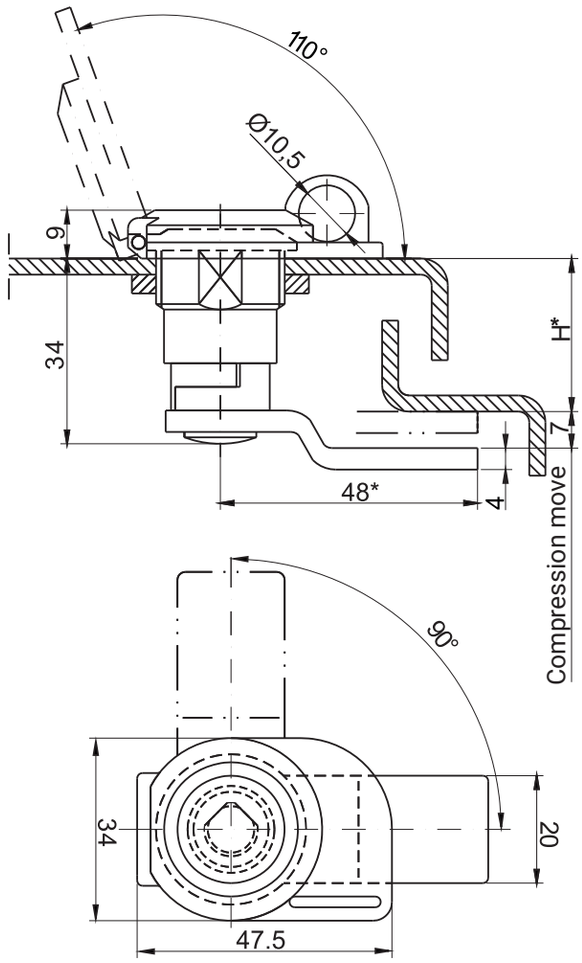

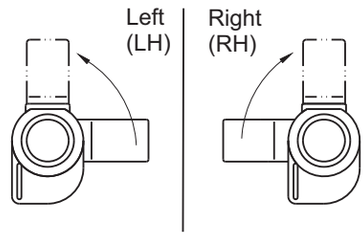

Pic.1 Lock in the closed position.
The arrow means the direction opening the lock

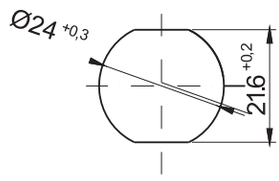

Cut out

Lock on the drawing in the left door version
The possibility adapting the lock to the door right (Pic.1).

Insert										Finish [C]		
										Nickel	RAL 9005	RAL 7035
T6	T8	T9	L	KW 8	S	N	C9	D3	D5	02	04	05

NAME	COMPONENTS	MATERIAL
Lock M24B	Housing	ZAMAK5
	Cam, insert	Steel zinc plated
	Blocade	Stainless steel

How to order :

M24B — T9 — 20 — C — L

Type of lock
Type of insert
Height of cam H =20, 23, 26
Finish
Type of lock (RH - Right, LH-Left)

* possibility to make in another dimension

Lock M24, M24ZN

ROZTOCZE

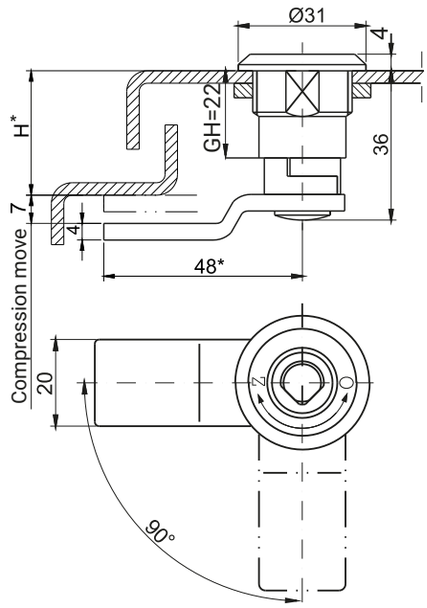

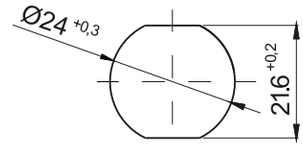

Cut Out

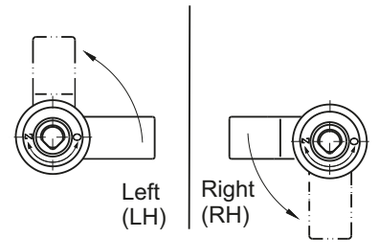

Lock on the drawing in the left door version
The possibility adapting
the lock to the door right (Pic.1).

Pic.1 Lock in the closed position.
The arrow means the direction
opening the lock

Insert										Finish [C]		
										Nickel	RAL 9005	RAL 7035
T6	T8	T9	L	KW 8	S	N	C9	D3	D5	02	04	05

NAME	COMPONENTS	MATERIAL
Lock M24	Housing	ZAMAK5
	Cam, insert	Steel zinc plated
	Blocade	Stainless steel

IP65

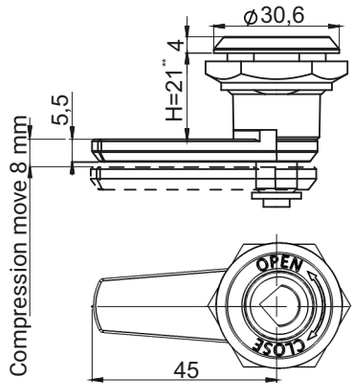

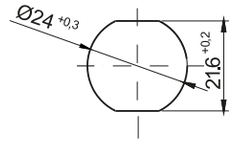

Cut Out

Insert											Finish [C]		
											Nickel	RAL 9005	RAL 7035
T6	T8	T9	T10	L	KW 8	S	N	C9	D3	D5	02	04	05

NAME	COMPONENTS	MATERIAL
Lock M24ZN	Housing, cam	ZAMAK5
	Insert	Steel zinc plated

How to order : M24 — T9 — 21 — C

- Type of lock
- Type of insert
- Height of cam H =22, 25, 28, 31
- Finish

* possibility to make in another dimension
** lock M24ZN available only with cam dimension H=21 mm

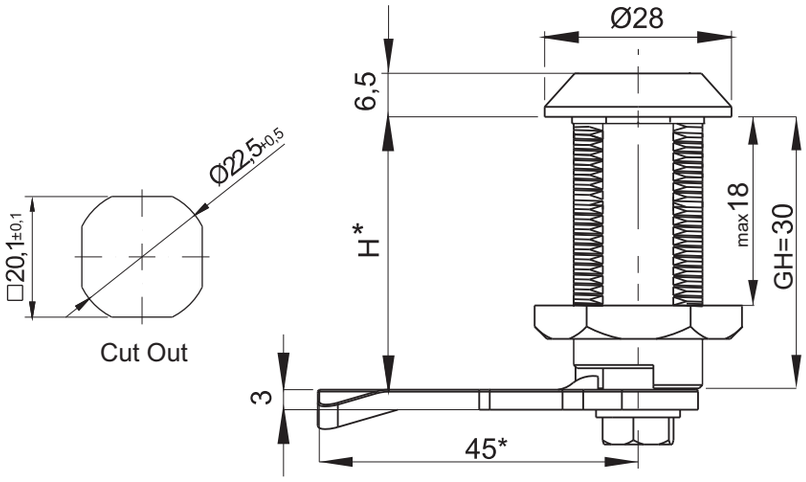

M22-30.02

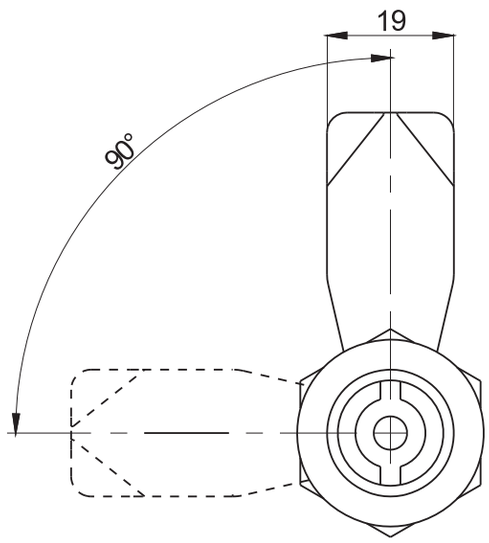

M22-30.01

Additional protection lock is a "Blocade ST1 or ST2 lock" (see page 2A-107, 108, 109)

Insert							Finish [C]			
							Chrome	Nickel	RAL 9005	RAL 7035
D3	D5	T9	KW 8	S	N	C9	01	02	04	05

NAME	COMPONENTS	MATERIAL
Lock M22-30.01 **Lock M22-30.02**	Housing, insert	ZAMAK5
	Cam	Steel zinc plated

How to order : M22-30.01 — C — T9 — C — H.G

Type of lock

Housing finish

Type of insert

Insert finish

Height of cam H (1C-9 - 1C-22)

* possibility to make in another dimension
The lock is fitted with cams from the group: 11, 12, 13, 14, 18, 31, 32, 33, 34, 38, JK-1610

Lock M22-40, M22-60

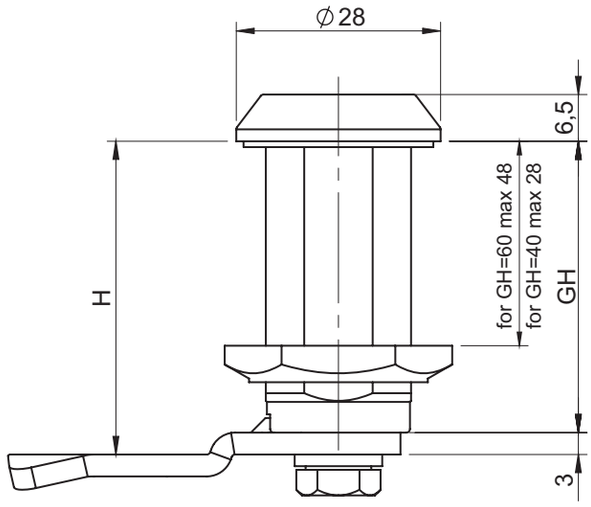

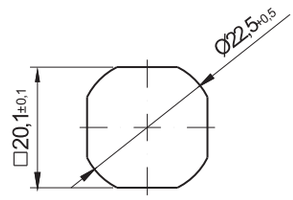

Cut Out

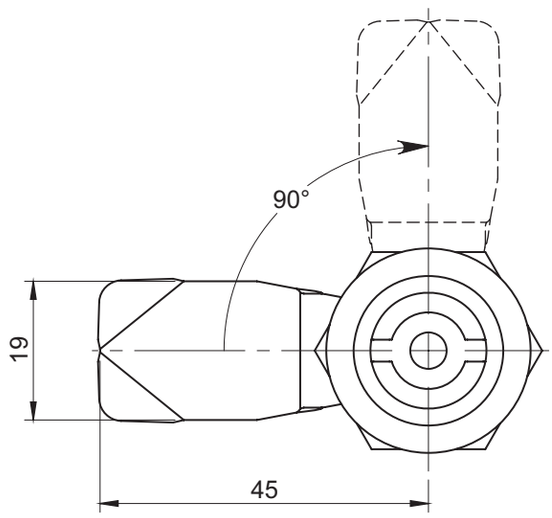

Additional protection lock is a "blocade ST1 or ST2 lock" (see page 2A-107 do 2A-109)

Insert							Finish [C]			
							Chrome	Nickel	RAL 9005	RAL 7035
D3	D5	T9	KW 8	S	N	C9	01	02	04	05

TYPE OF LOCK	DIMENSION GH	COMPONENTS	MATERIAL
M22-40	40	Housing, insert	ZAMAK5
		Cam	Steel zinc plated
M22-60	60	Housing, insert	ZAMAK5
		Cam	Steel zinc plated

How to order:

M22 — C — T9 — C — H.G

Type of lock
Housing finish
Type of insert
Insert finish
Height of cam H (page 1C-9 - 1C-22)

* possibility to make in another dimension
The lock is fitted with cams from the group: 11, 12, 13, 14, 18, 31, 32, 33, 34, 38, JZ-002, JK-1610 (page 1C-9 - 1C-22)

M22ZD

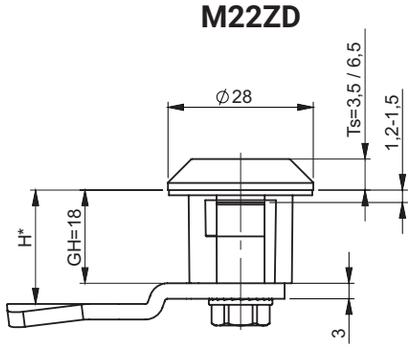

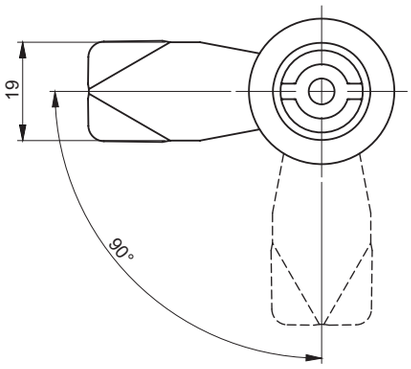

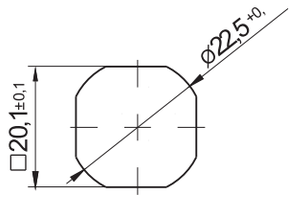

Cut out

Lock with flange 3.5 version only with pins made of polyamide tip: S, D3, D5.
Locks available from the plastic cam

Insert							Insert finish [C]				Housing finish [K]	
							Chrome	Nickel	RAL 9005	RAL 7035	RAL 9005	RAL 7035
D3	D5	T9	KW 8	S	N	C9	01	02	04	05	07	08

NAME	COMPONENTS	MATERIAL
M22ZD	Housing	Poliamide
	Insert	ZAMAK5
	Cam	Steel zinc plated

How to order : M22ZD 7,5 — T9 — H.G — 90 — C — K

- Type of lock+Ts
- Type of insert
- Height of cam H (page 1C-9 - 1C-22)
- The opening angle of (90°, 180°)
- Insert finish
- Housing finish

* possibility to make in another dimension
H.G - the cam unbending dimension (H-locking height, G-group)
to be chosen from pages 1C-9 to 1C-22

The lock is fitted with cams from the group: 11, 12, 13, 14, 18, 31, 32, 33, 34, 38, JZ-002, JK-1610.01

Lock M22ZW, M22ZW22

M22ZW

M22ZW

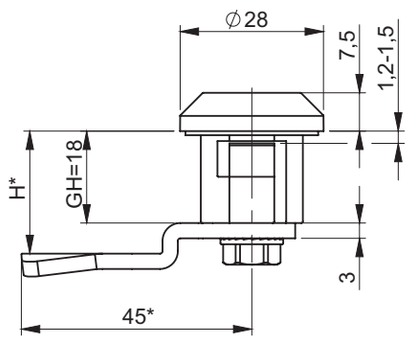

M22ZW22

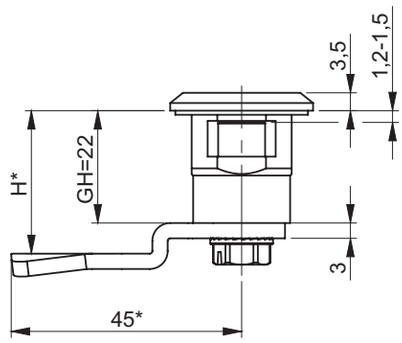

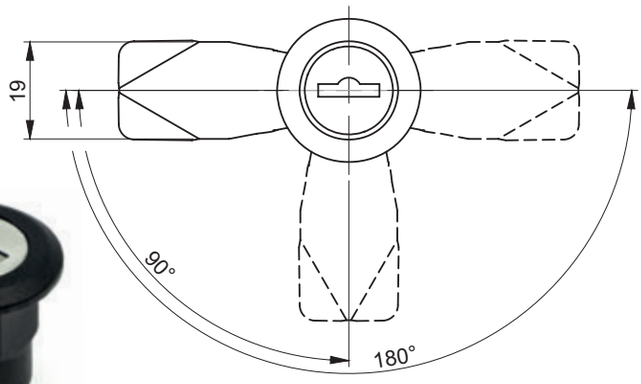

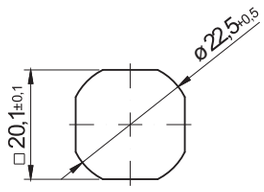

Cut Out

M22ZW22

Key code						Finish [C]	
1333	405E	455E	1242E	2432E	RK	RAL 9005	RAL 7035
						07	08

TYPE OF LOCK	COMPONENTS	MATERIAL
M22ZW M22ZW22	Housing	Poyamide
	Cam	Steel zinc plated

How to order :

M22ZW — 1333 — H.G — 90 — C

- Type of lock
- Key code
- Height of cam H (page 1C-9 - 1C-22)
- The opening angle of (90°, 180°)
- Finish

* possibility to make in another dimension
H.G - the cam unbending dimension (H-locking height, G-group)

The lock is fitted with cams from the group: 15, 16, 17, 19, 21, JZ-001, JK-10018 (page 1C-9 - 1C-22)

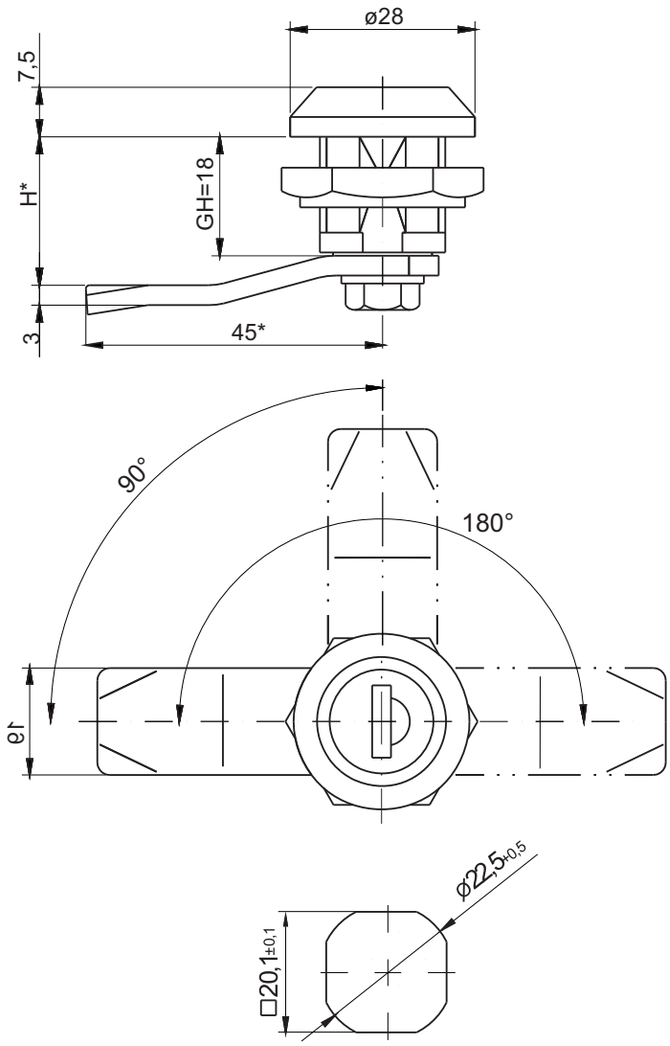

Cut Out

Key code						Finish [C]				
1333	405E	455E	1242E	2432E	RK	Chrome	Nickel	Zn **	RAL9005	RAL7035
						01	02	03	04	05

NAZWA	COMPONENTS	MATERIAL
Lock M22W	Housing	ZAMAK5
	Cam	Steel zinc plated

How to order :

M22W — 1333 — H.G — 90 — C

- Type of lock
- Key code
- Height of cam H (page 1C-9 - 1C-22)
- The opening angle of (90°, 180°)
- Finish

* possibility to make in another dimension
** galvanized
The lock is fitted with cams from the group: 15, 16, 17, 19, 21, 35, 36, JZ-001, JK-10018 (page 1C-9 - 1C-22)

Lock M22DW22, M22W32

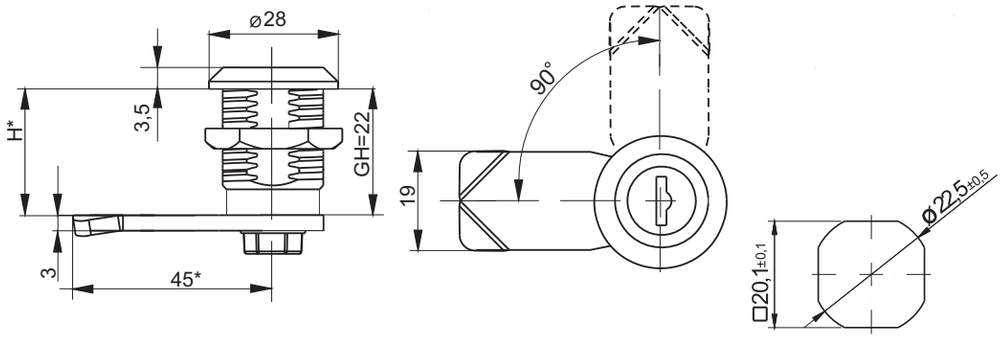

Cut out

Key code						Finish [C]	
1333	405E	455E	1242E	2432E	RK	RAL 9005	RAL 7035
						07	08

TYPE OF LOCK	COMPONENTS	MATERIAL
M22DW22	Housing	Polyamide
	Cam	Steel zinc plated

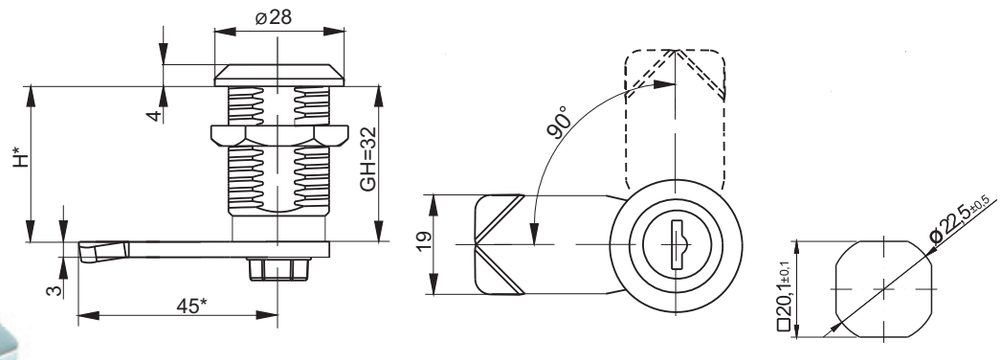

Cut out

Key code						Finish [C]			
1333	405E	455E	1242E	2432E	RK	Chrome	Nickel	RAL 9005	RAL 7035
						01	02	04	05

TYPE OF LOCK	COMPONENTS	MATERIAL
M22W32	Housing	ZAMAK5
	Cam	Steel zinc plated

How to order : M22W32 — 1333 — H.G — C

- Type of lock
- Key code
- Height of cam H
- Finish

* possibility to make in another dimension
H.G - the cam unbending dimension (H-locking height, G-group)
The lock is fitted with cams from the group: 15, 16, 17, 19, 21, 35, 36, JZ-001, JK-10018
(page 1C-9 - 1C-22)

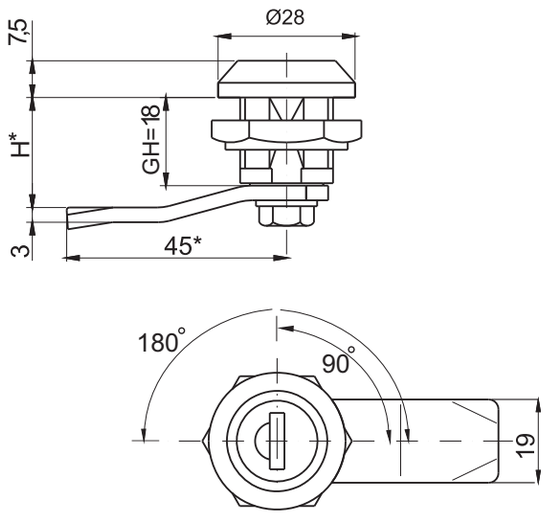

Key code						Finish [C]			
1333	405E	455E	1242E	2432E	RK	RAL 9005	07	RAL 7035	08

TYPE OF LOCK	COMPONENTS	MATERIAL
M22DW	Housing	Polyamide
	Cam	Steel zinc plated

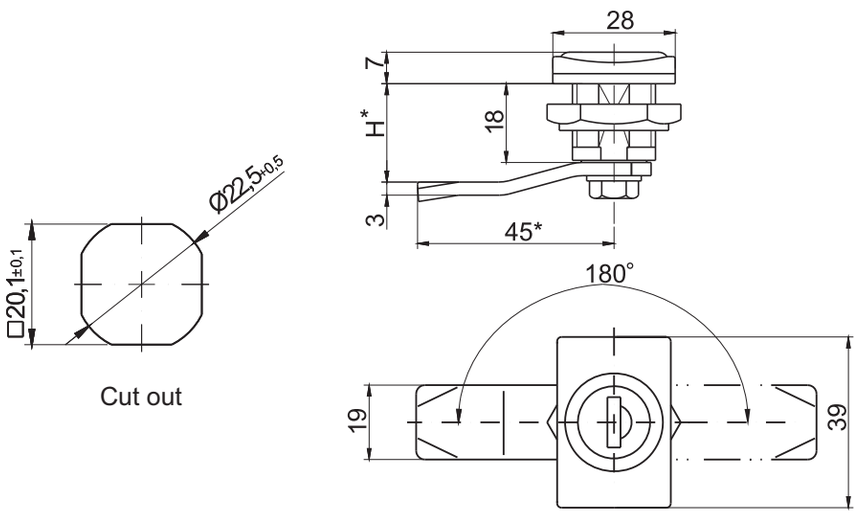

Cut out

Key code						Finish [C]			
1333	405E	455E	1242E	2432E	RK	RAL 9005	07	RAL 7035	08

TYPE OF LOCK	COMPONENTS	MATERIAL
M22PW	Housing	Polyamide
	Cam	Steel zinc plated

How to order : M22DW — 1333 — H.G — 90 — C

- Type of lock
- Key code
- Height of cam H (page 1C-9 - 1C-22)
- The opening angle of (90°, 180°)
- Colour of housing

* possibility to make in another dimension
Locks are configured with insert and the nut of polyamide
H.G - the cam unbending dimension (H-locking height, G-group)
The lock is fitted with cams from the group: 15, 16, 17, 19, 21, 35, 36, JZ-001, JK-10018 (page 1C-9 - 1C-22)

Lock M22MS

ROZTOCZE

LH/RH

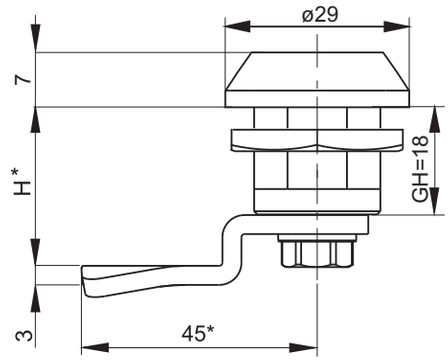

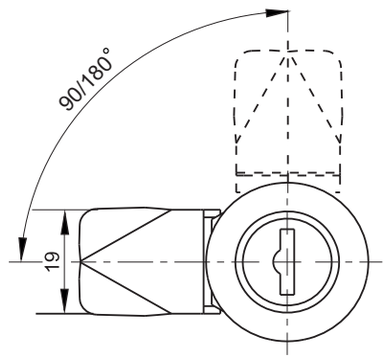

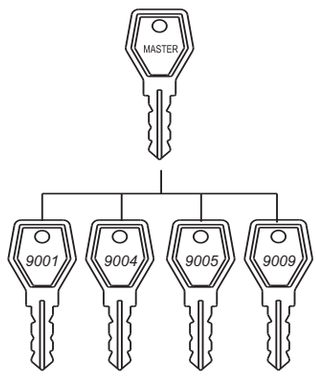

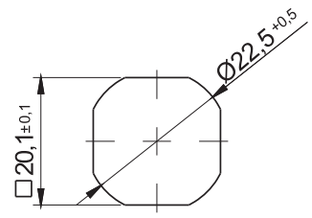

Cut Out

Key code	Finish [C]			
	Chrome	Nickel	RAL 9005	RAL 7035
9001 - 9010	01	02	04	05

NAME	COMPONENTS	MATERIAL
Lock M22PW	Housing	ZAMAK5
	Cam	Steel zinc plated

How to order : M22MS — 9006 — H.G — 90 — C

- Type of lock
- Key code
- Height cam H (page 1C-9 - 1C-22)
- Angle of rotation (90°, 180°)
- Finish

* possibility to make in another dimension
In order to configure the system master please to contact the dealer.
The lock is fitted with cams from the group: 15, 16, 17, 19, 21, 35, 36, JZ-001, JK-10018 (page 1C-9 - 1C-22)

LH/RH

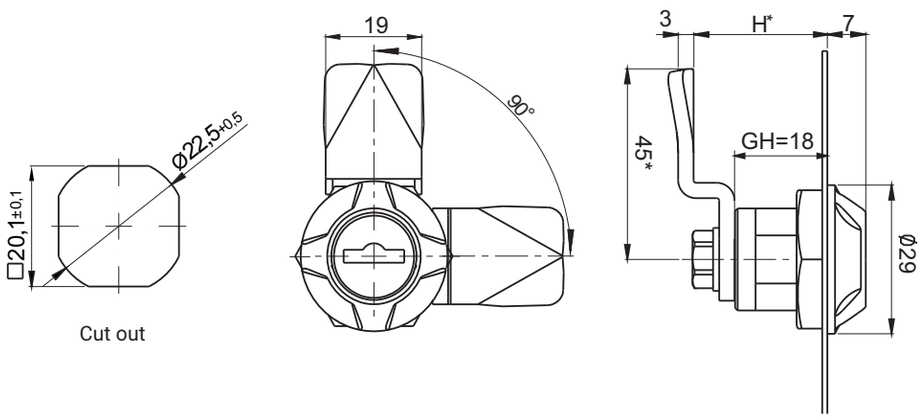

Key code						Finish [C]			
						Chrome	Nickel	RAL 9005	RAL 7035
1333	405E	455E	1242E	2432E	RK	01	02	04	05

NAME	COMPONENTS	MATERIAL
Lock M22EW	Housing	ZAMAK5
	Cam	Steel zinc plated

LH/RH

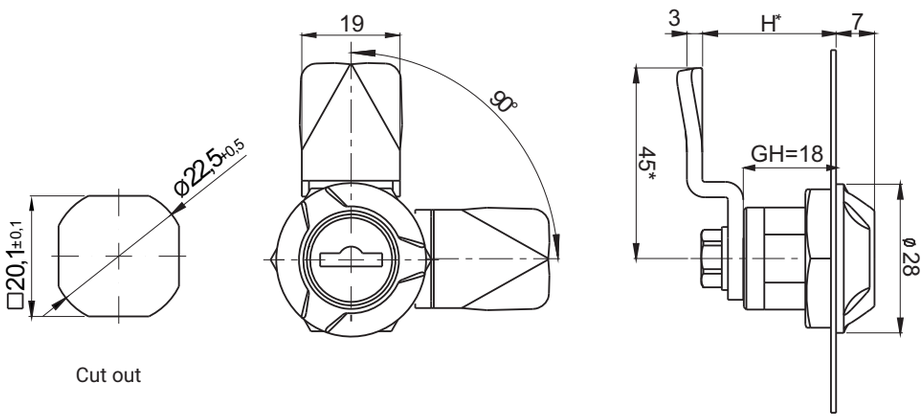

Key code						Finish [C]			
						Chrome	Nickel	RAL 9005	RAL 7035
1333	405E	455E	1242E	2432E	RK	01	02	04	05

NAME	COMPONENTS	MATERIAL
Lock M22FW	Housing	ZAMAK5
	Cam	Steel zinc plated

How to order : M22FW — 1333 — H.G — C

Type of lock

Key code

Height cam H (page 1C-9 - 1C-22)

Finish

* possibility to make in another dimension

The lock is fitted with cams from the group: 15, 16, 17, 19, 21, 35, 36, JZ-001, JK-10018 (page 1C-9 - 1C-22)

Lock M19W

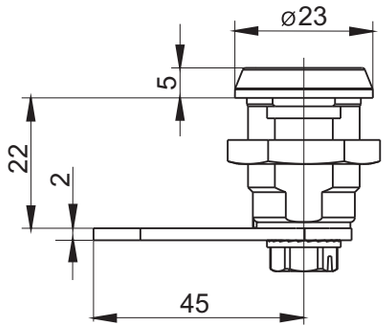

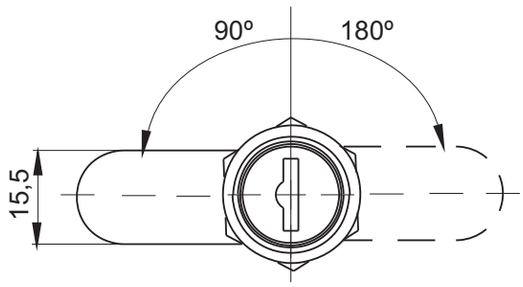

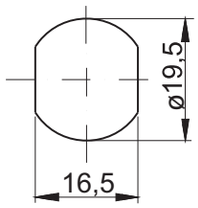

Cut out

Key code						Finish [C]				
						Chrome	Nickel	Zn **	RAL9005	RAL7035
1333	405E	455E	1242E	2432E	RK	01	02	03	04	05

NAME	COMPONENTS	MATERIAL
Lock M19W	Housing	ZAMAK5
	Cam	Steel zinc plated

How to order :

M19W — 1333 — 22 — 90 — C

- Type of lock
- Key code
- Height of cam H = 22, 24, 26
- The opening angle of (90°, 180°)
- Finish

* possibility to make in another dimension
** galvanized

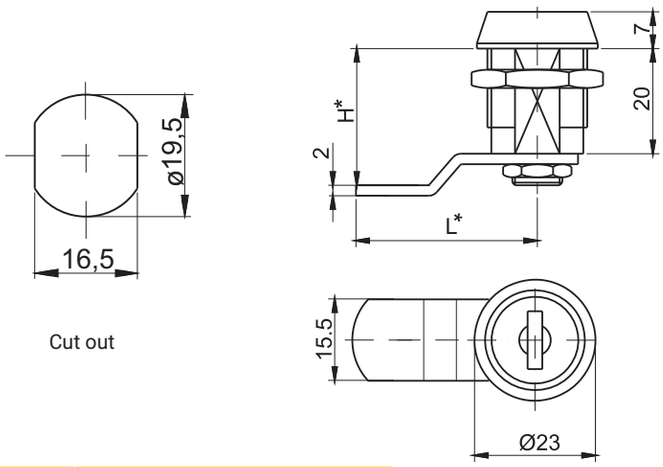

Key code		Finish [C]
25001	RK	Chrome
		01

TYPE OF LOCK	COMPONENTS	MATERIAL
Z-2106	Housing	ZAMAK5
	Cam	Steel zinc plated

How to order : Z-2106 — RK — 20 — C

- Type of lock
- Key code
- Height cam H = 20, 22, 26
- Finish

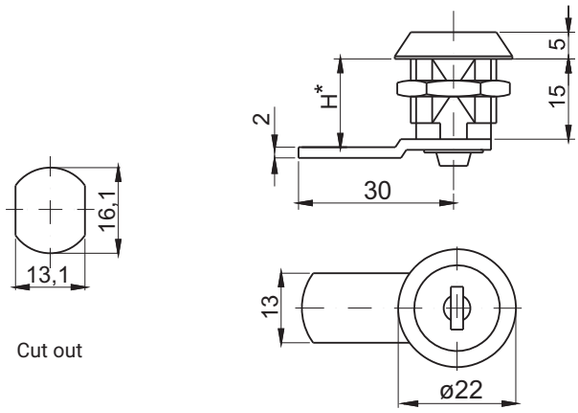

Key code		Finish [C]
827	RK	Chrome
		01

TYPE OF LOCK	COMPONENTS	MATERIAL
Z-0233	Housing	ZAMAK5
	Cam	Steel zinc plated

How to order : Z-0233 — RK — 15 — C

- Type of lock
- Key code
- Height cam H = 15, 17
- Finish

* possibility to make in another dimension

Lock 2.529, 2.611, 2.612

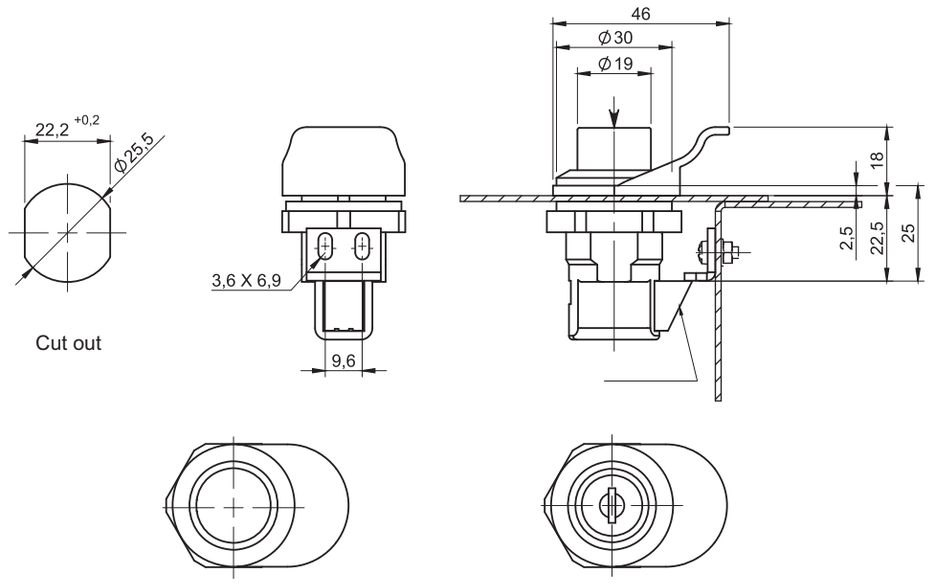

TYPE OF LOCK	VERSION	MATERIAL	FINISH [C]
2.529.001	With key	ABS	RAL 9005
2.529.002	Without key		07

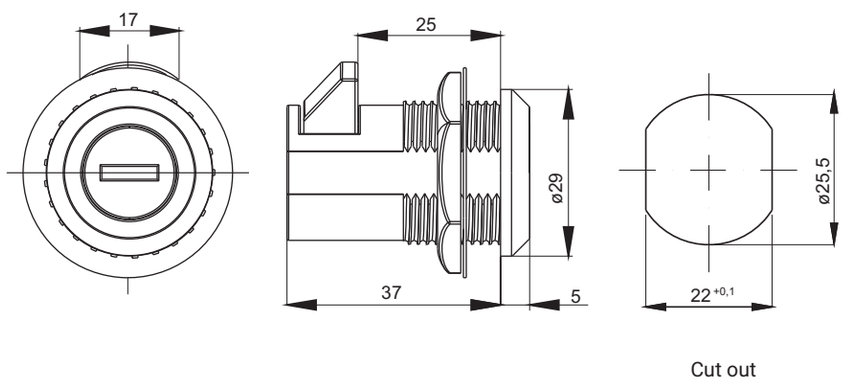

TYPE OF LOCK	COMPONENTS	MATERIAL	FINISH [C]
2.611.001	Housing	ZAMAK5	Chrome
			01

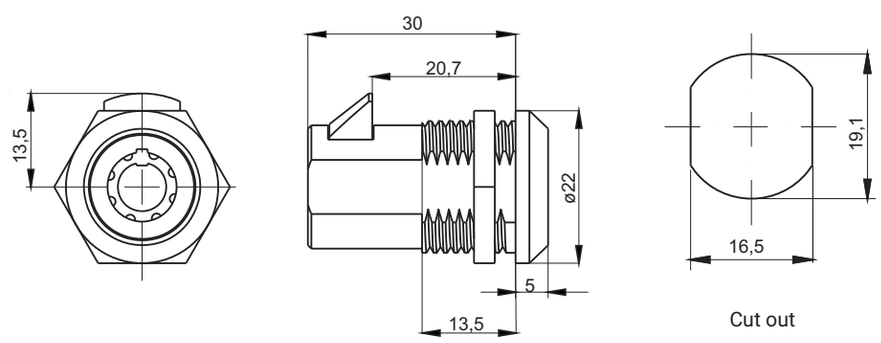

TYPE OF LOCK	COMPONENTS	MATERIAL	FINISH [C]
2.612.001	Housing	ZAMAK5	Chrome
			01

stainless steel | IP69K | LH/RH

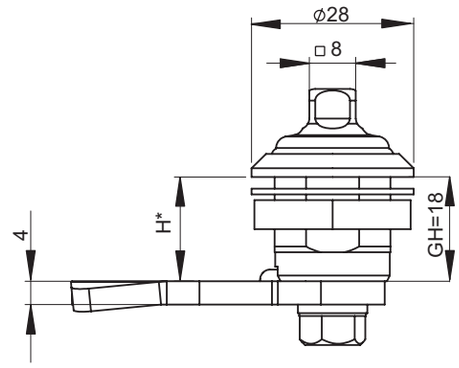

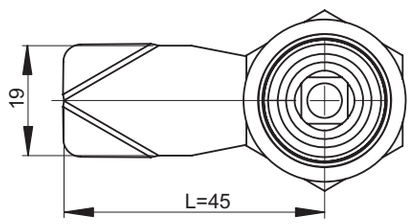

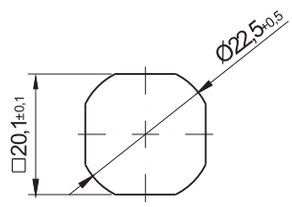

Cut out

The lock have a the IP69K protection
The seals are in accordance with FDA and
have allowing from to come into contact with the food product
* standard material stainless steel 304,
possible to order stainless steel 316

Insert		
T9	KW 8	C9

NAME	COMPONENTS	MATERIAL
Lock M22 IP	Housing, insert	Stainless steel
	Cam	Stainless steel

How to order : M22IP — KW 8 — 18

Type of lock

Type of insert

Height cam H (page 1C-9 - 1C-22)

* possibility to make in another dimension

Lock M22TR

stainless steel

IP65

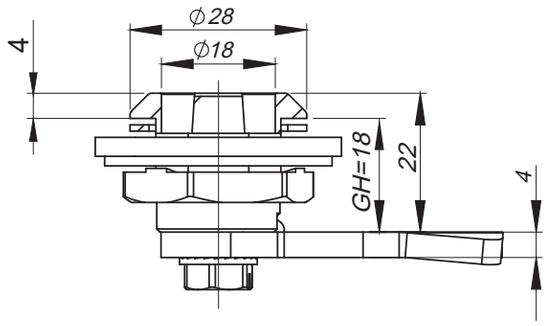

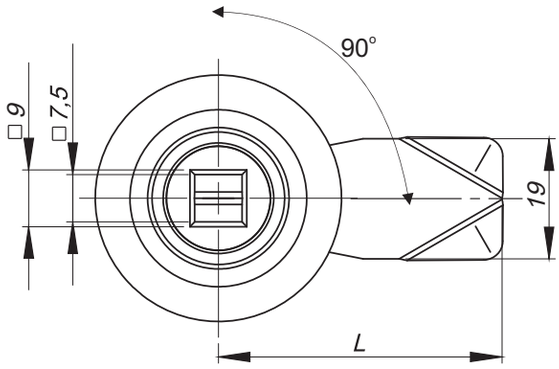

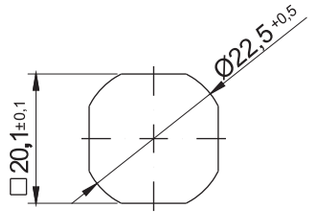

Cut out

The lock in accordance to NF F 01-054 standard.
The lock has a strength test on opening and closing process
and also tests describing the impact of vibration according to EN 61373 standard.

Washer M22 DIN 125 A included.

Inserts	
T9	KW 8

NAME	COMPONENTS	MATERIAL
Lock M22TR	Housing, insert	Stainless steel 304
	Cam	Stainless steel 304

How to order:

M22TR — KW8 — H.G — P

Type of lock
Type of insert
Height cam H (page 1C-9 - 1C-22)
Version (L- left, P-right)

where H.G - the cam unbending dimension

Notice:
Lock M22TR is compatible with all cams from range : 13, 14, 33, 34,
H.G dimension to be chosen from pages 1C-9 to 1C-22 from the catalogue.

stainless steel

LH/RH

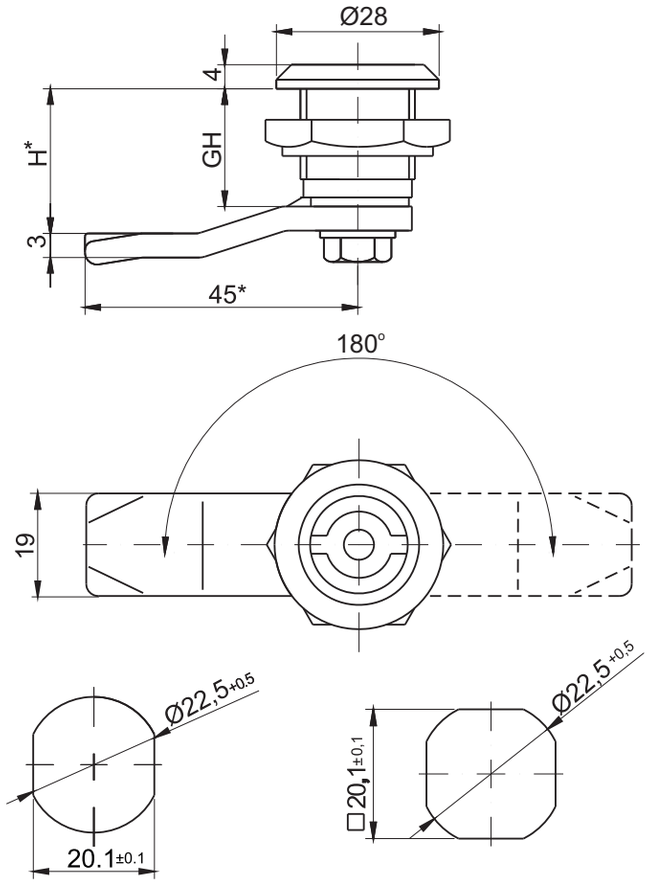

Cut out
Type A

Cut out
Type B

Lock adapted to work with 3 points cam.
Note: Lock milled in with 4 sides (Type B rear lock) - on request.

where:

ZZR18 = GH=18
ZZR19 = GH=19
ZZR28 = GH=28
ZZR38 = GH=38
ZZR50 = GH=50

Insert									Finish [C]
									Chrome
D3	D5	T8	T9	KW 8	S	N	C9	KW8-9Z	01

NAME	COMPONENTS	MATERIAL
ZZR18, ZZR19, ZZR28, ZZR38, ZZR50	Housing, insert	Steel
	Cam	Steel zinc plated
ZZR18SN, ZZR19SN, ZZR28SN, ZZR38SN, ZZR50SN	Housing, insert	Stainless steel
	Cam	Stainless steel

How to order : ZZR18 — T9 — 18 — C

Type of lock
Type of insert
Height cam H (page 1C-9 - 1C-22)
Finish

* possibility to make in another dimension
**possibility of making lock grade stainless steel. 316

The lock is fitted with cams from the group: 11, 12, 13, 14, 18, 31, 33, 38, JK-1610.01 (page 1C-9 - 1C-22)

Lock ZZR18.010

stainless steel | IP65 | LH/RH

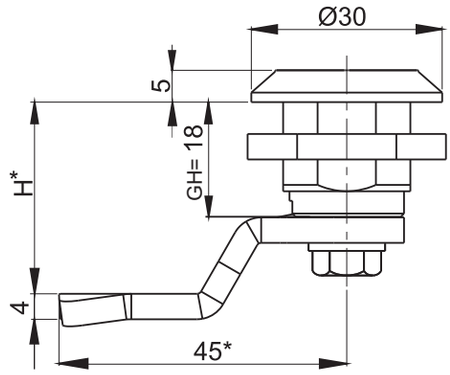

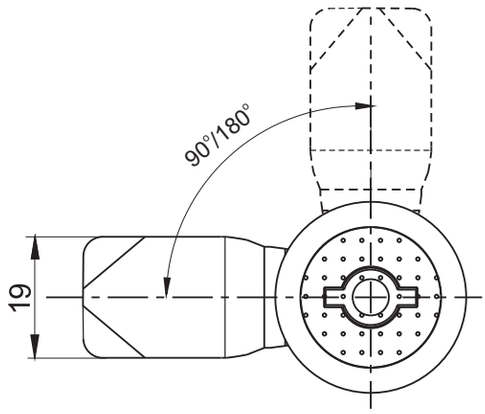

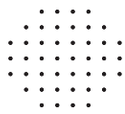

Means closed surface

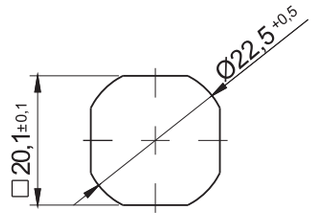

Cut out

TYPE OF LOCK	COMPONENTS	MATERIAL	Insert		
ZZR18.010	Housing, insert	Stainless steel			
	Cam		D5	T8	KW 8

How to order : ZZR18.010 — KW 8 — H.G

Type of lock

Type of insert

Height cam H (page 1C-9 - 1C-22)

* possibility to make in another dimension
Note: When ordering specify the thickness of the locking cam

The lock is fitted with cams from the group: 11, 12, 13, 14, 18, 31, 33, 38, JZ-002, J-6000.03, J-6000.04, JK-1610.01 (page 1C-9 - 1C-22)

Lock ZZR28/S

stainless steel
LH/RH

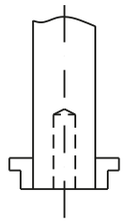

Key **2.KL-D3S.005**
pg. 2A-114

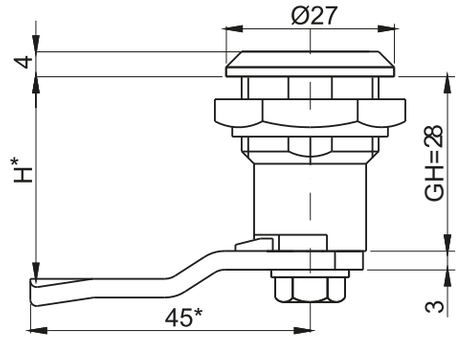

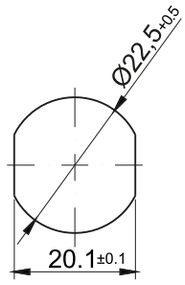

Cut out

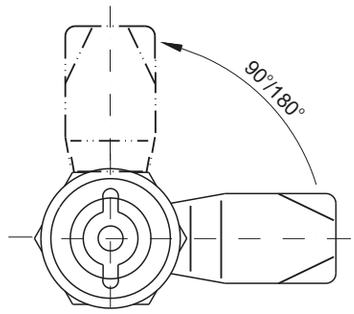

Left version

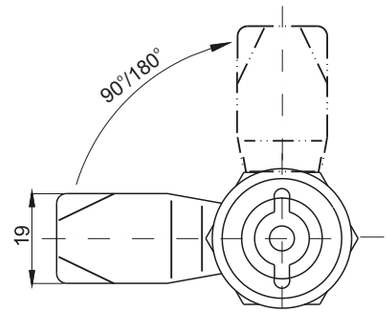

Right version

TYPE OF LOCK	COMPONENTS	MATERIAL	FINISH [C]
			Chrome
ZZR28/S	Housing, insert	Brass	01
	Cam	Steel zinc plated	-
ZZR28/S SN	Housing, insert	Stainless steel	-
	Cam	Stainless steel	-

How to order : ZZR28/S — D3 — H.G — L — 90 — C

- Type of lock
- Type of insert
- Height cam H (page 1C-9 - 1C-22)
- Version (L- left, P-right)
- Opening angle (90°, 180°)
- Finish

* possibility to make in another dimension

Note:
A key 2.KL-D3S.005 pg.2A-114, can be ordered for the lock, which is designed to prevent the ZZR from being pulled out of the lock when turned to the "open" position.
The lock can be used with 3-point cam with a limiter pg. 1C-17, 1C-18
H.G- dimension of the cam bend (H- height of the lock, G-group)

Lock compatible with cams from groups 11,13,18, 31, 33, 38, JZ-002, JK-1610.01 (pg.1C-9 1C-22).

Lock CZ-E1, M22R

ROZTOCZE

LH/RH

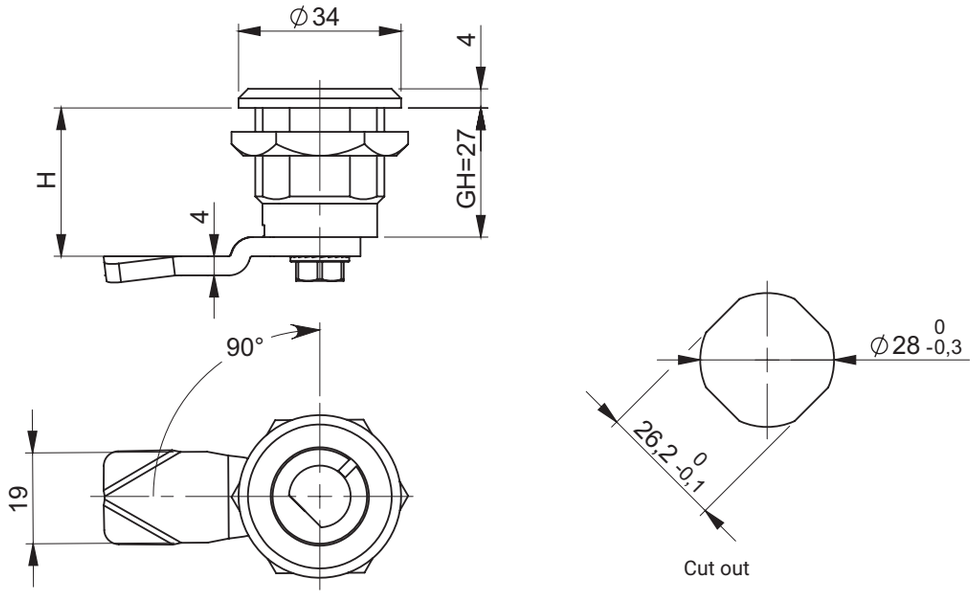

Insert
D13

Note:
1. The key can be inserted and pull out only in the closed position
2. Adapted to lock the key KL-D13 (page 2A-115)

TYPE OF LOCK	COMPONENTS	MATERIAL
CZ-E1	Housing, insert	Brass zinc plated
	Cam	Steel zinc plated

LH/RH

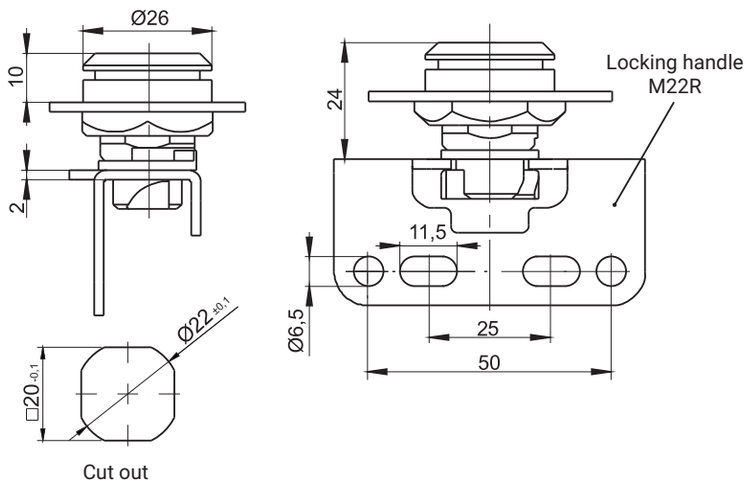

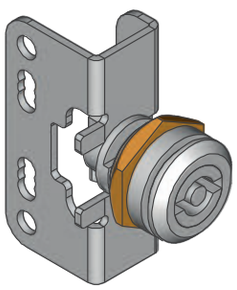

Insert		
D5	T9	KW 8

TYPE OF LOCK	COMPONENTS	MATERIAL
M22R	Housing, insert	Steel zinc plated
	Cam	ZAMAK5

How to order : CZ-E1 — D5 — 27

Type of lock

Type of insert

Height cam H = 27, 30, 33 (does not apply to M22R)

* possibility to make in another dimension

Notice: Handle for M22R is not a part of a set.
To order separately:
- galvanized steel M22R: M22R.001.01
- stainless steel: M22R.001.02

LH/RH

GE-0101

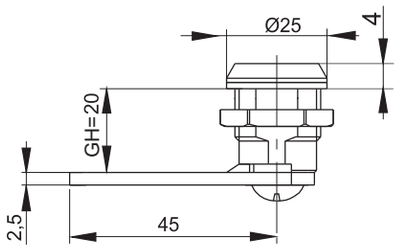

Version

Left

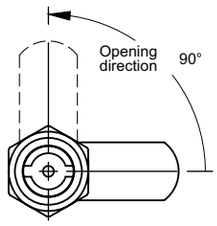

Right

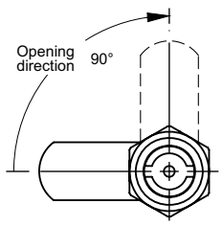

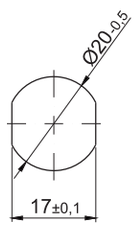

Cut Out

Insert		
D3	T9	KW 8

GE-0100

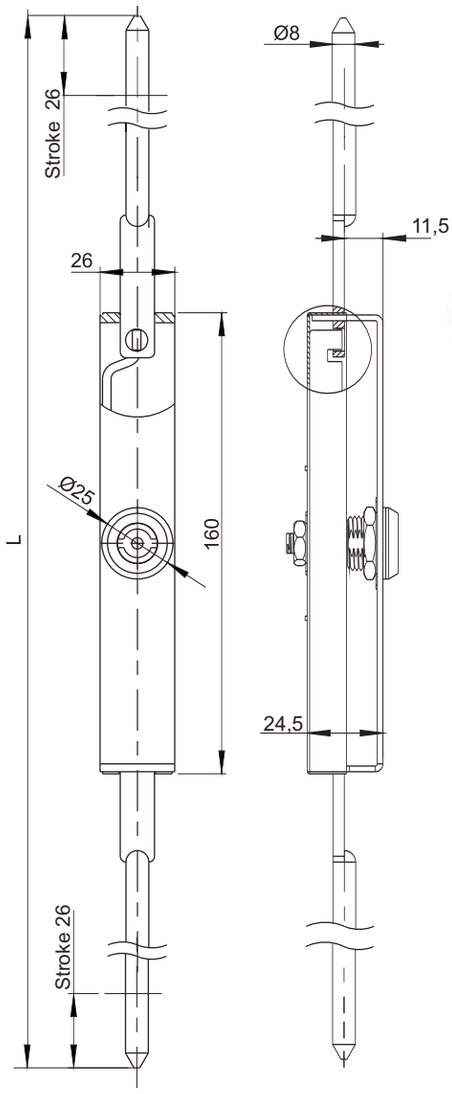

For this lock you can order key from page 2A-112 to 2A-114 (ø13,5)

TYPE OF LOCK	COMPONENTS	MATERIAL	FINISH [C]
			Chrome
GE-0101	Housing, insert	Brass - chromium	01
	Cam	Steel zinc plated	-
GE-0100	Housing, insert	Brass - chromium	01
	Cam	Stainless steel	-

How to order :

GE-0101 — D3 — 20 — L — C

Type of lock

Type of insert

Height cam H (20, 22, 24) only for GE-0101 lock

Version (P-right, L-left)

Finish

* possibility to make in another dimension

Lock M22SP

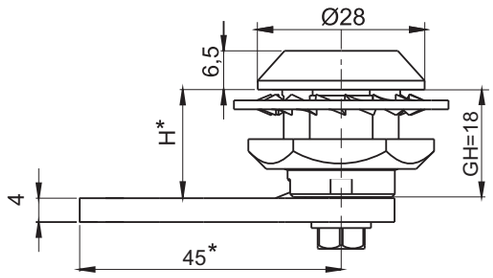

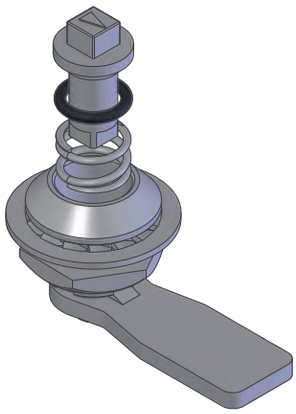

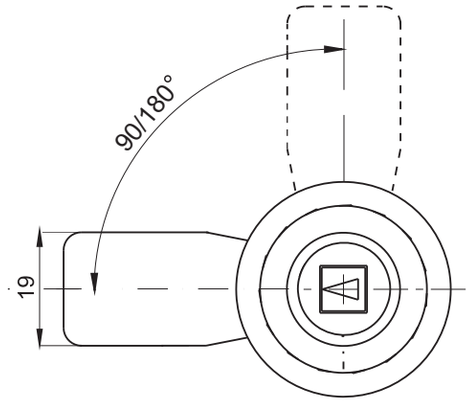

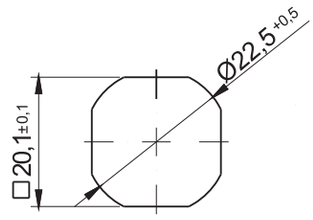

Cut out

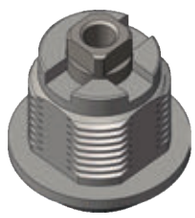

Type A

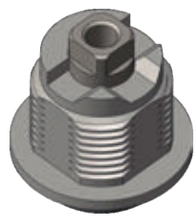

Type B

Lock with backlash compensation and protection in case of accidental opening.
In order to open/close the lock first press the insert and then turn 90o degrees.

Insert					Finish [C]			
					Chrome	Nickel	RAL 9005	RAL 7035
KW6	KW8	KW8-3	T8	T9	01	02	04	05

TYPE OF LOCK	COMPONENTS	MATERIAL
M22SP	Housing, insert	ZAMAK5
	Cam	Steel zinc plated

How to order : M22SP — A — KW8 — H.G — C — 90

- Type of lock
- Type of housing
- Type of insert
- Type of cam (page 1C-9 to 1C-22)
- Finish
- Opening angle (90°, 180°)

* possibility to make in another dimension

The lock is fitted with cams from the group: 11, 12, 13, 14, 31, 32, 33, 34, 38, (page 1C-9 - 1C-22)

Lock M22SD20SN

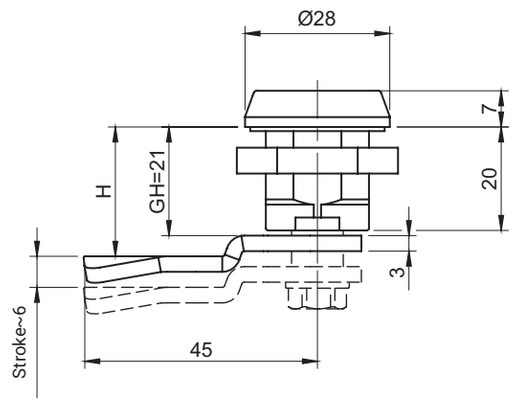

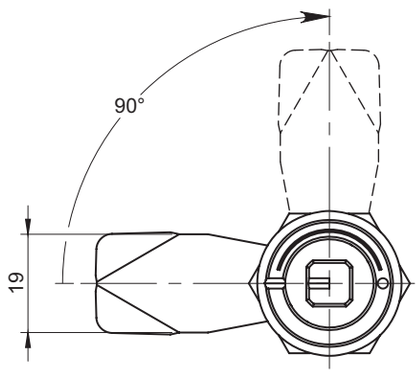

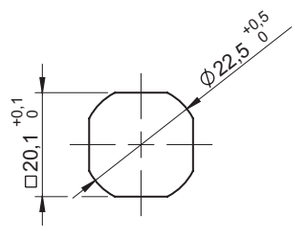

Cut out

Compression lock with a stroke of approx. 6mm.
The drawing shows the right-hand version of the lock.
The left-hand version is a mirror reflection of the right.

TYPE OF LOCK	INSERTS [D]			COMPONENTS	MATERIAL
M22SD20SN	RAILWAY	KW8	T9	Housing, Insert, Cam	Stainless steel

How to order:

M22SD20 — T9 — H.G — P

Type of lock
Type of insert [D]
Locking height
Version (L-left, P-right)

where:
H - locking height
G - cam group

Lock M22SD20SN is fitted with cams from the group: 16 (page 1C-12)

Lock M22SA2 with foamed sealing PUR

ROZTOCZE

NEW | LH/RH | PUR | IP65

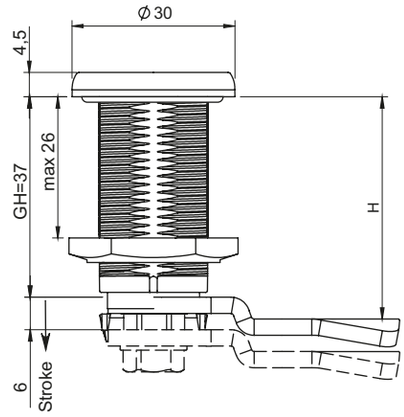

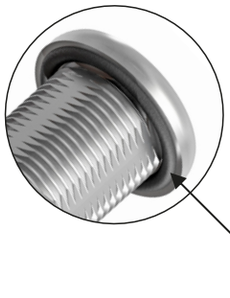

Housing with foamed sealing PUR

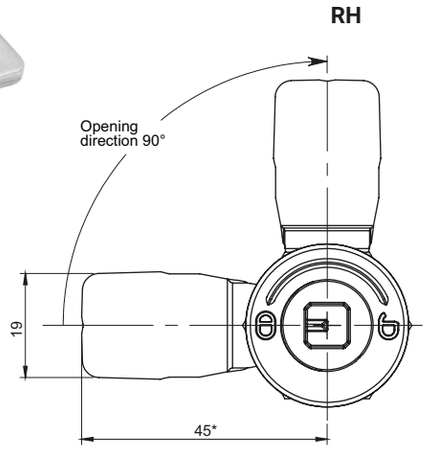

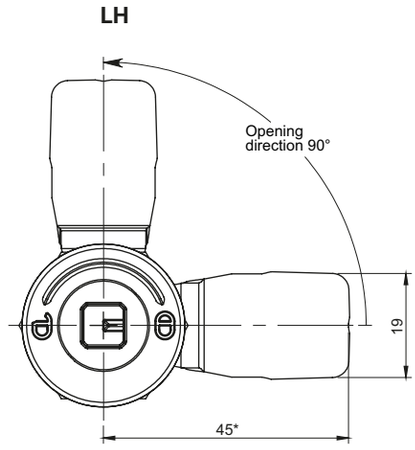

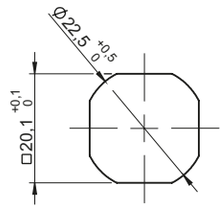

Cut out

TYPE OF LOCK	COMPONENTS	MATERIAL
M22SA2	Housing, Knob	ZAMAK5
	Cam, Washer, Nut Internal mechanism	Steel zinc plated

INSERTS [X]				FINISH [C]	
				Chrome	RAL9005
KW8	T8	D3	D5	01	04

How to order:

M22SA2 — KW8.01 — L.01 — H.G — PUR

- M22SA2 — Type of lock
- KW8.01 — Type of insert [X]
- KW8.01 — Insert finish [C]
- L.01 — Type of lock (L-Left, R-Right)
- L.01 — Housing finish [C]
- H.G — Locking height
- PUR — PUR foam seal

where:
H - the cam unbending dimension
G - cam group
Lock M22SA2 is compatible with all cams from range:15, 16, 19, 35, 36 (page 1C-12 - 1C-19)

LH/RH

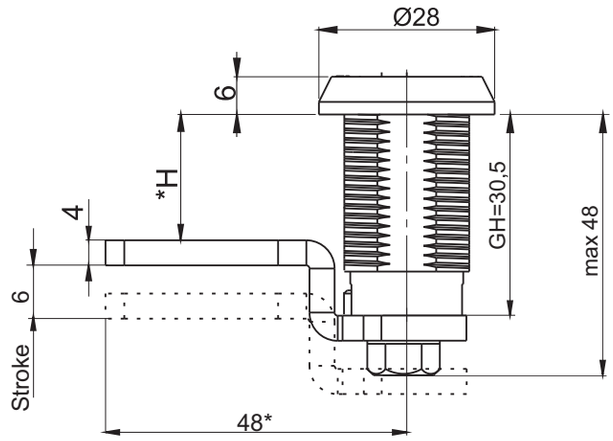

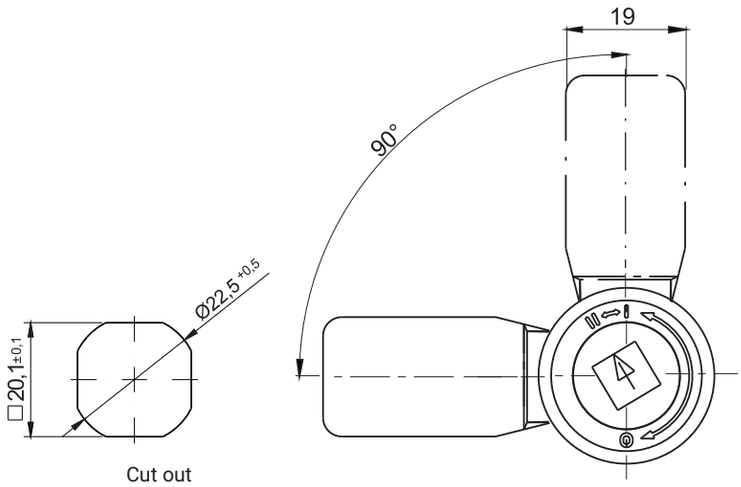

Insert					Finish [C]
					Chrome
T9	KW 8	S	N	RAILWAY	01

TYPE OF LOCK	COMPONENTS	MATERIAL
M22SD30	Housing, Insert	ZAMAK5
	Cam	Steel zinc plated
M22SD30-SN	Housing, Insert, Cam	Stainless steel

How to order : M22SD30 — T9 — 18 — C — P

- Type of lock
- Type of insert
- Height cam H =18, 20, 22
- Finish
- Lock version (P-Right, L-left)

* possibility to make in another dimension
Lock M22SD30 addition to being locked, has shaped the possibility of additional security padlock.

Lock M22SP2

stainless steel

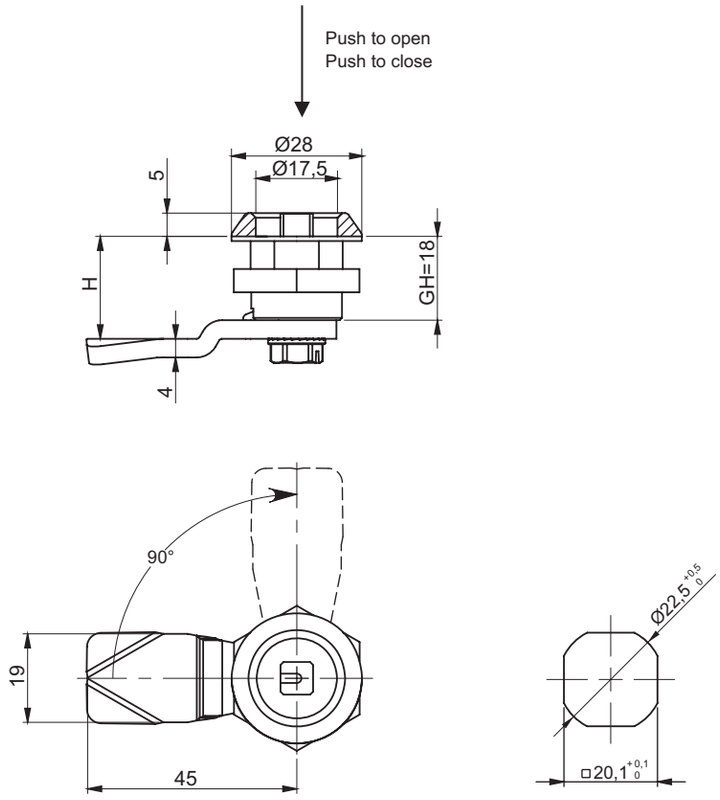

Lock with backlash compensation and protection in case of accidental opening.
In order to open/close the lock first press the insert and then turn 90° degrees.

Insert			
KW 7	KW 8	T8	T9

TYPE OF LOCK	COMPONENTS	MATERIAL
M22SP2	Housing, Insert, Cam	Stainless steel

How to order:

M22SP2 — KW8 — H.G

Type of lock
Type of housing
Finish

The lock is fitted with cams from the group: 13, 14, 33, 34, (page 1C-9 - 1C-22)

stainless steel

LH/RH

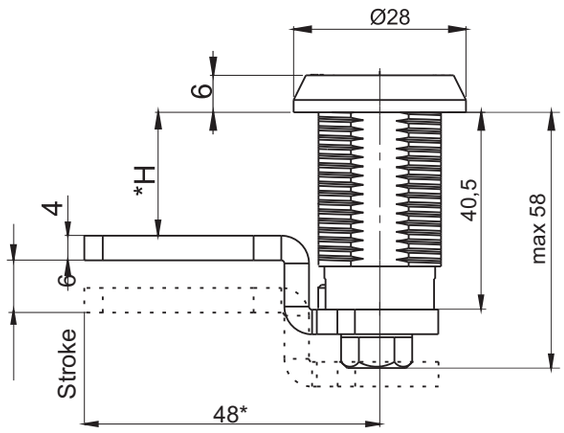

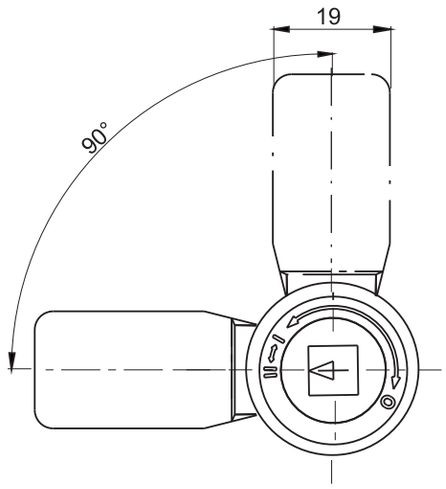

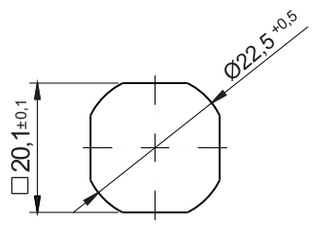

Cut out

Insert				
T9	KW 8	S	N	RAILWAY

TYPE OF LOCK	COMPONENTS	MATERIAL
M22SD40	Housing, insert	Stainless steel
	Cam	

How to order :

M22SD40 — T9 — 18 — P

Type of lock

Type of insert

Height cam H =18, 20, 22

Lock version (P-Right, L-Left)

* possibility to make in another dimension
Lock M22SD40 addition to being locked, has shaped the possibility of additional security padlock.

Lock M22SC

stainless steel

LH/RH

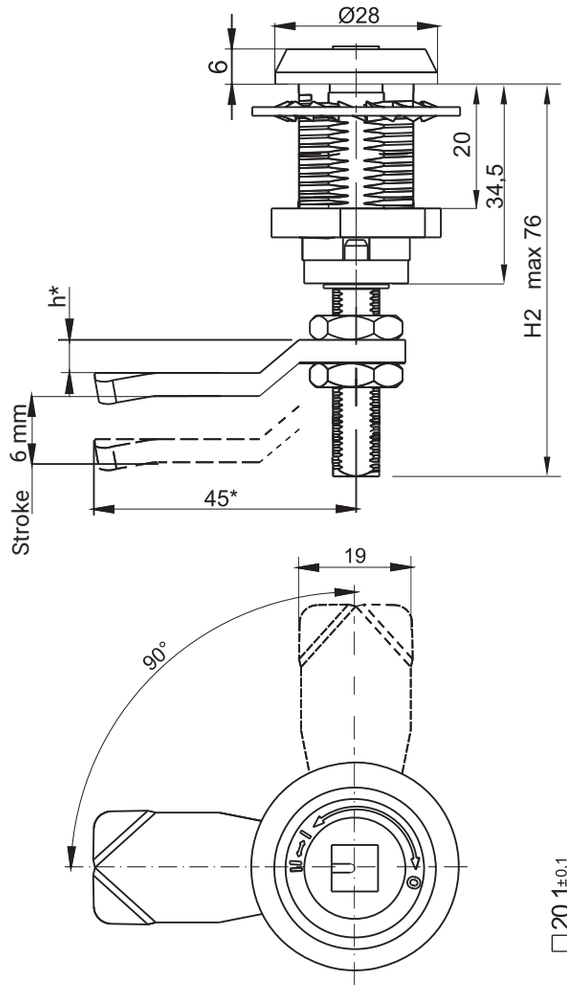

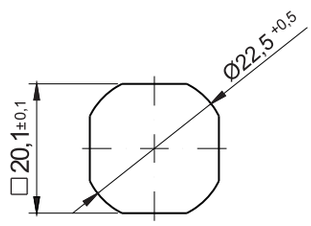

Cut out

Insert					Finish [C]
					Chrome
T9	KW 8	S	N	RAILWAY	01

TYPE OF LOCK	COMPONENTS	MATERIAL
M22SC	Housing, insert	ZAMAK5
	Cam	Steel zinc plated
M22SC SN	Housing, insert	Stainless steel
	Cam	

How to order : M22SC — T9 — 3 — C P

Type of lock

Type of insert

Height cam h =0, 3, 6, 9, -3, -6, -9

Finish

Lock version (P-right, L-left)

* possibility to make in another dimension
Lock M22SC addition to being locked, has shaped the possibility of additional security padlock.

IP65 LH/RH

Type A

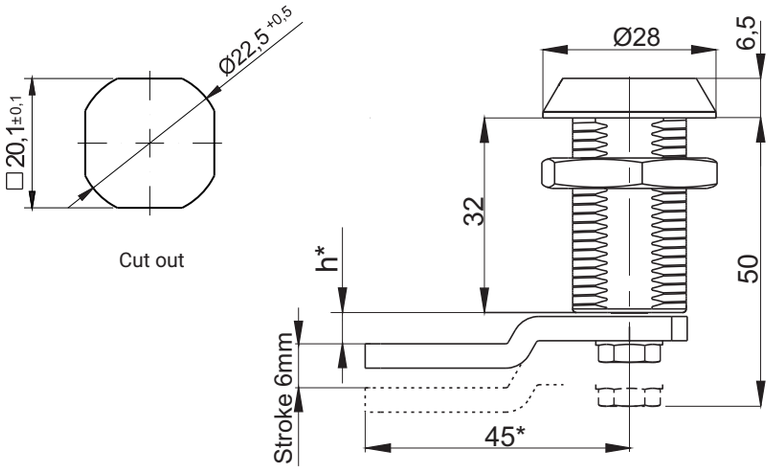

IP65 LH/RH

Type B

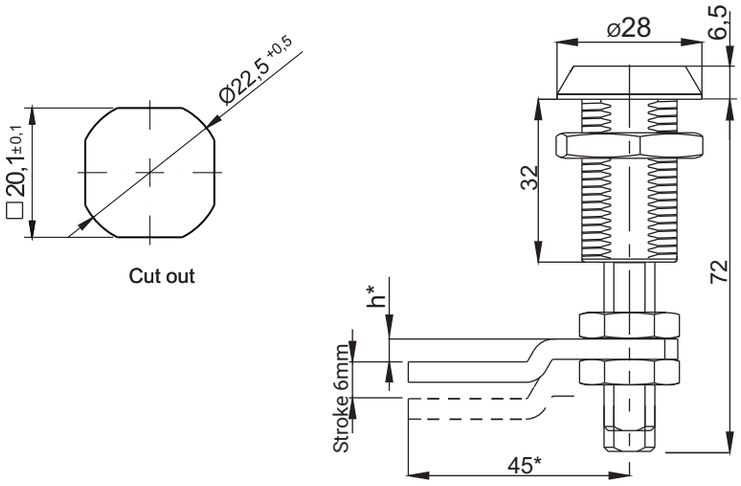

INSERT						FINISH [C]	
						Chrome	RAL 9005
D3	D5	T7	T9	KW 7	KW8	01	04

TYPE OF LOCK	COMPONENTS	MATERIAL
M22SA	Housing, insert	ZAMAK5
	Cam	Steel zinc plated

How to order : M22SA — AL — T9 — 3 — C

- Type of lock
- Type of housing + wer. of lock (P- right, L- left)
- Type of insert
- Height cam h =0, 3, 6, 9, -3, 6, -9
- Finish

* possibility to make in another dimension

Lock M22SE

stainless steel | IP65 | LH/RH

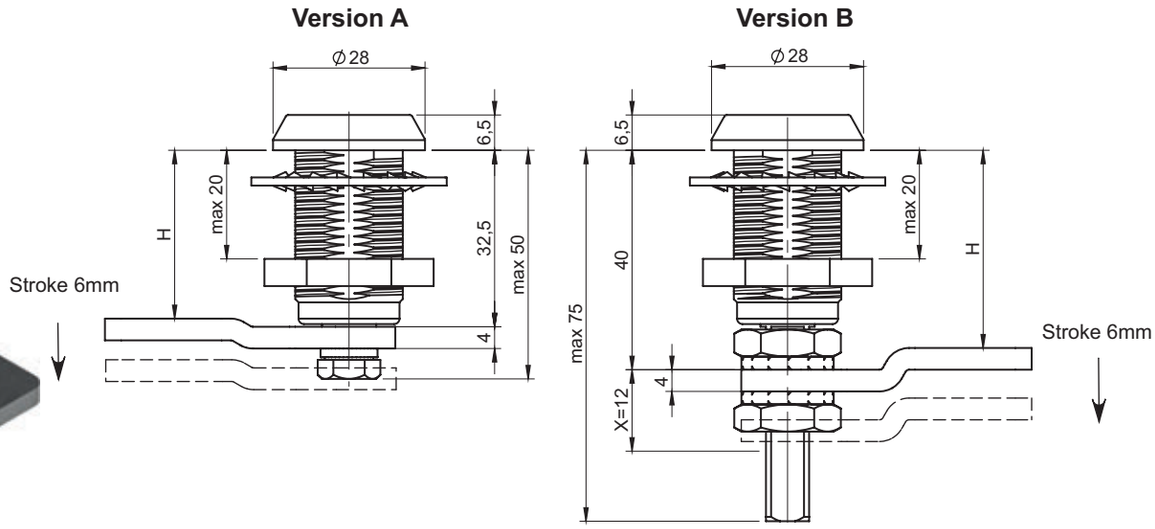

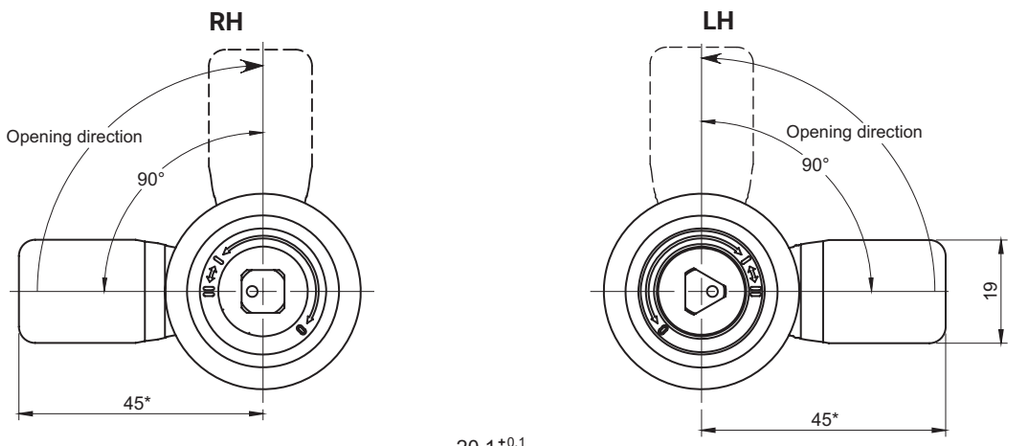

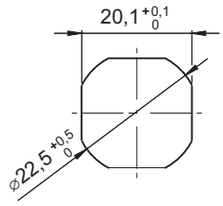

Cut out

TYPE OF LOCK	COMPONENTS	MATERIAL	INSERT			
M22SE SN	Housing, Insert	Stainless steel	T9	T7	KW8	KW8-2
	Cam					

How to order :

M22SE — T9 — AL — 32,5

Type of lock

Type of insert

Version A, B; (left - LH, right - RH)

Hight cam
- for version A H=27,5; 32,5; 37,5
- for version B H=35; 40; 45

* possibility to make in different dimension

LH/RH

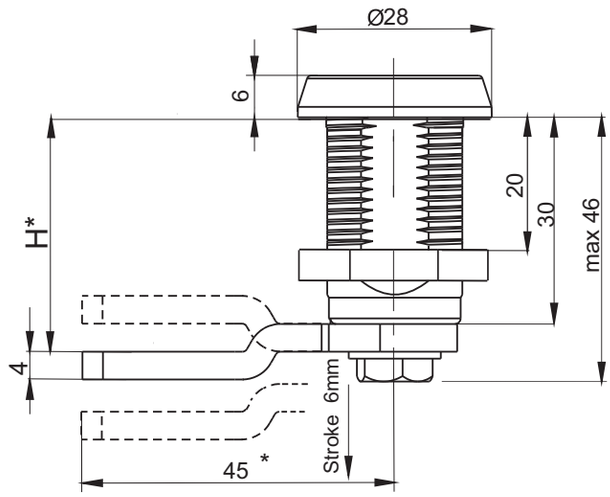

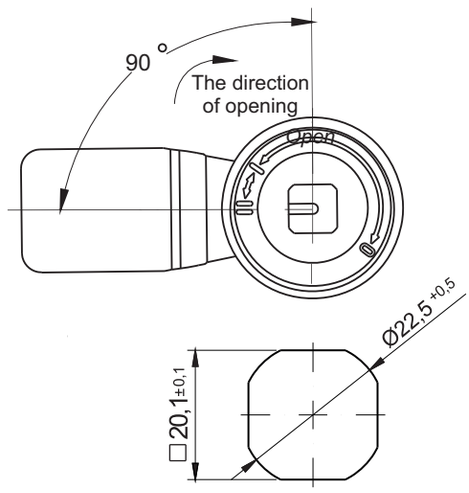

Cut out

INSERT		FINISH [C]	
		Chrom	RAL 9005
T9	KW8	01	04

TYPE OF LOCK	COMPONENTS	MATERIAL
M22SG	Housing, insert	ZAMAK 5
	Cam	Steel zinc plated

How to order :

M22SG — T9 — 30 — 01 — P

Type of lock

Type of insert

Height cam H =24; 27; 30; 33; 36

Finish

Lock version (P- right, L- left)

* possibility to make in another dimension

Lock M22JR-SN

stainless steel

IP65

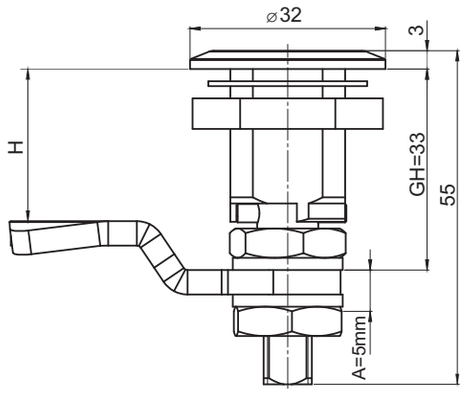

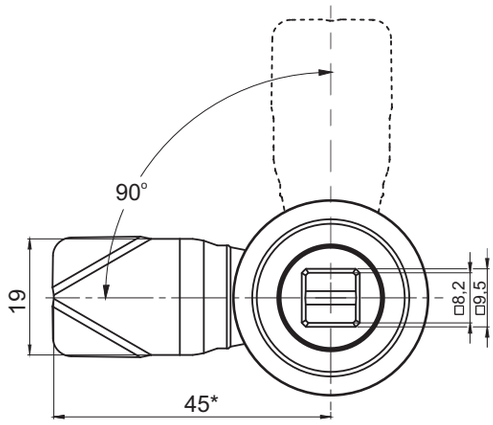

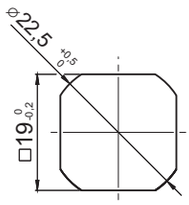

Cut out

A - the height of the latch adjustment H

TYPE OF LOCK	COMPONENTS	MATERIAL
M22JR-SN	Housing, Insert, Cam	Stainless steel

How to order: : M22JRSN — KW8/9,5 — 27

Type of lock

Type of insert

The hight of cam H=27, 31, 33, 35, 39

* possibility to order in a different dimension

stainless steel

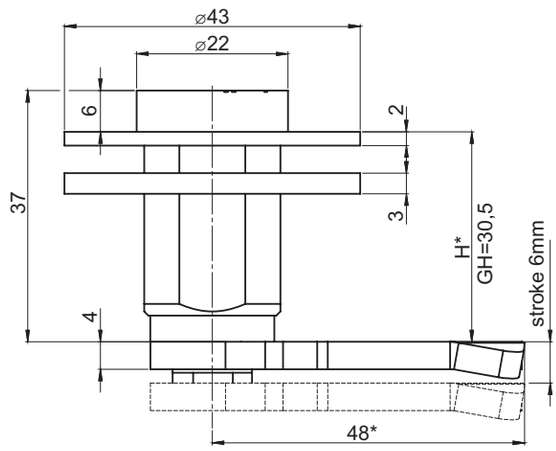

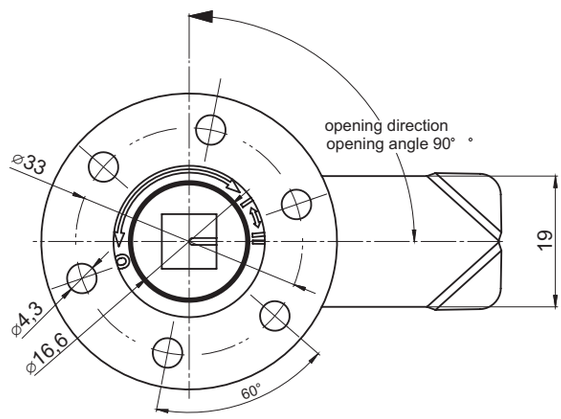

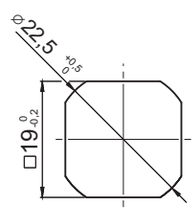

Cut out

INSERTS					FINISH [C]
					Chrome
T9	KW 8	S	N	RAILWAY	01

TYPE OF LOCK	COMPONENTS	MATERIAL
M22SK30	Housing	ZAMAK5
	Insert	Stainless steel
	Cam, Washer, Nut	Zinc plated steel
M22SK30SN	Housing, Insert, cam, washer, Nut	Stainless steel

How to order:

M22SK30 — T9 — 18 — C — P

Type of lock
Type of insert
The height of cam H =18, 20, 22
Finish
Version of lock (R-right, L- left)

* Possibility to order in a different dimension

Lock M22SK32

Version A

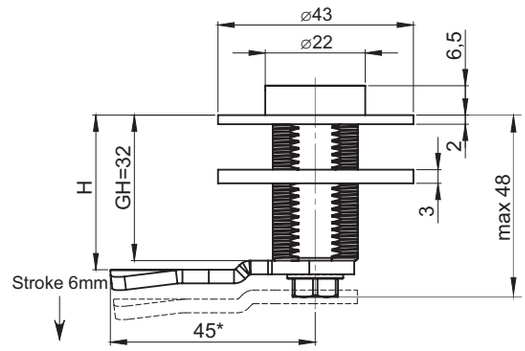

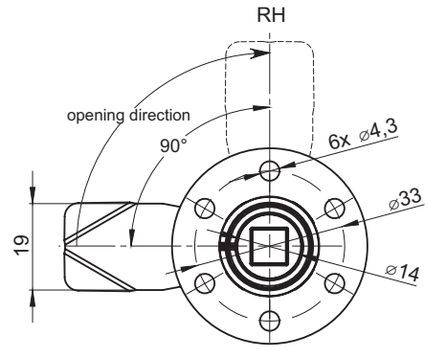

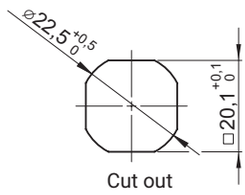

Version B

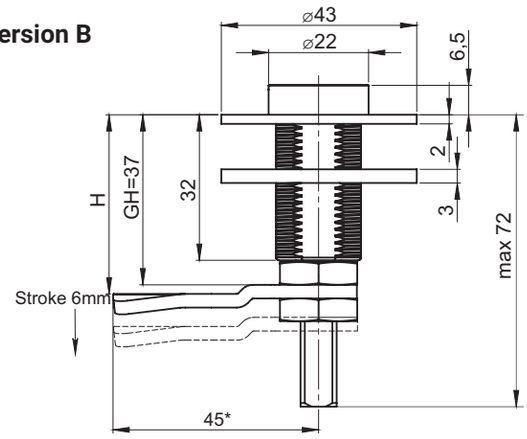

INSERTS					FINISH [C]	
					Chrome	RAL 9005
D3	D5	T9	KW 7	KW8	01	04

TYPE OF LOCK	COMPONENTS	MATERIAL
M22SK32	Housing, Insert	ZAMAK5
	Cam, Washer, Nut	Zinc plated steel

How to order:

M22SK32 — T9 — BL — 32 — C

Type of lock

Type of insert

Version of lock (R-right, L- left)

The height of cam
- for version A: H=26, 29, 32, 35, 38
- for version B: H=31, 34, 37, 40, 43

Finish

* Possibility to order in a different dimension

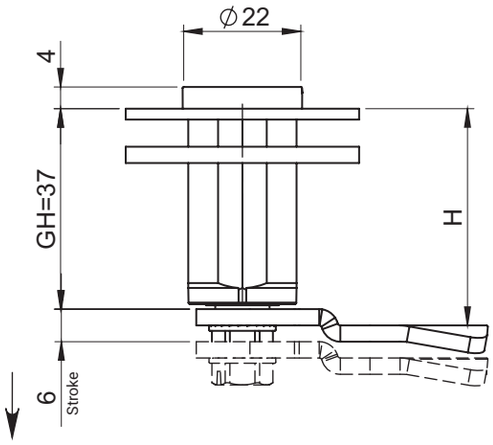

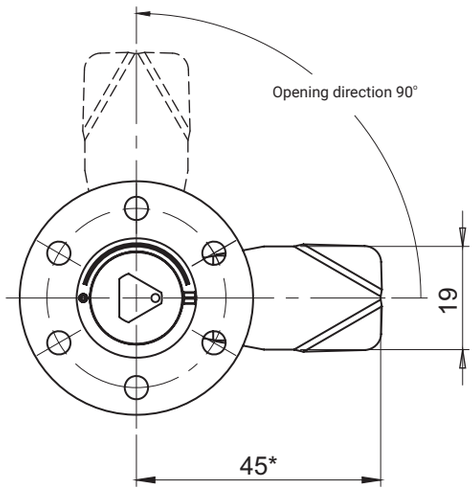

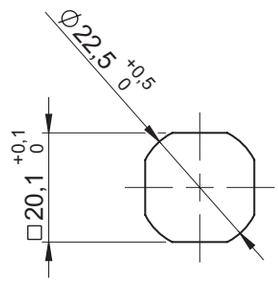

Otwór montażowy

The lock shown fits left-hand doors. The lock for right-hand doors is a mirror image.

TYPE OF LOCK	COMPONENTS	MATERIAL
M22SK37	Housing, Insert	ZAMAK5
	Cam, Washer, Screw, Internal Mechanism	Zinc plated steel

INSERTS		FINISH [C]	
		Chrome	RAL9005
KW8	T8	01	04

How to order:

M22SK37. L. C. — KW8. C. — H.G

Type of lock
Version of lock R-right, L- left
Housing finish
Type of insert
Insert finish
Height locking

meaning:
H - the cam unbending dimension
G - cams range
Lock M22SK37 is compatible with cams from groups: 15, 16, 19, 35, 36 (page 1C-12 - 1C-19)

Cover 2.904.020SN

stainless steel

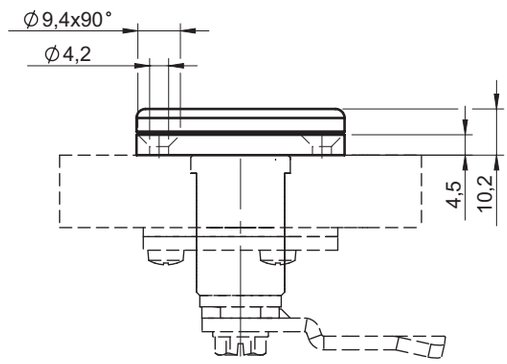

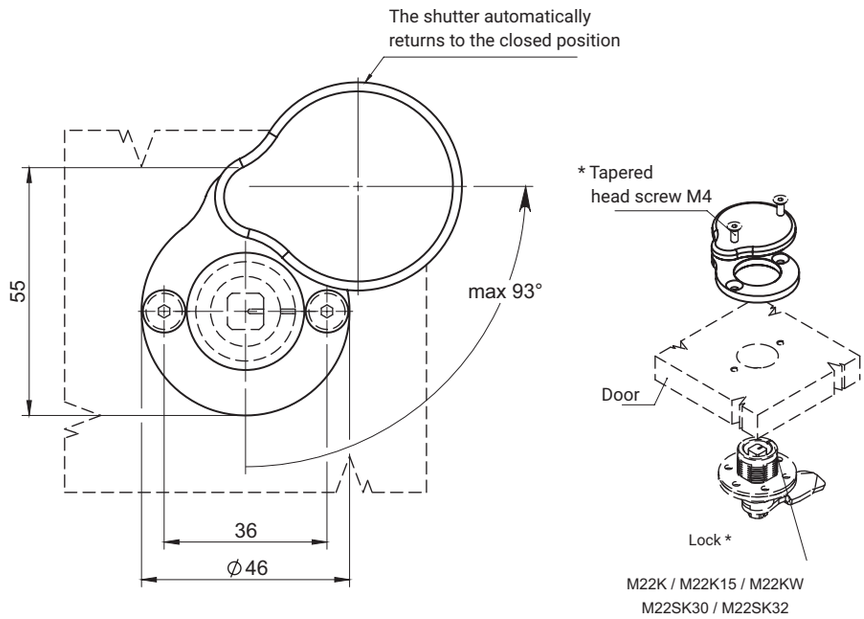

Cover 2.904.020SN compatible with locks: M22K, M22K15, M22KW, M22SK30, M22SK32, M22SK37.
* not included in delivery

NR CATALOGUE NUMBER	DETAIL	MATERIAL
2.904.020SN	Przesłona	Stainless steel, electropolished

Lock M16SD22

ROZTOCZE

stainless steel | IP65 | LH/RH

Version A

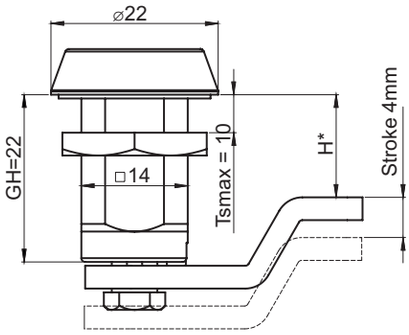

Version B

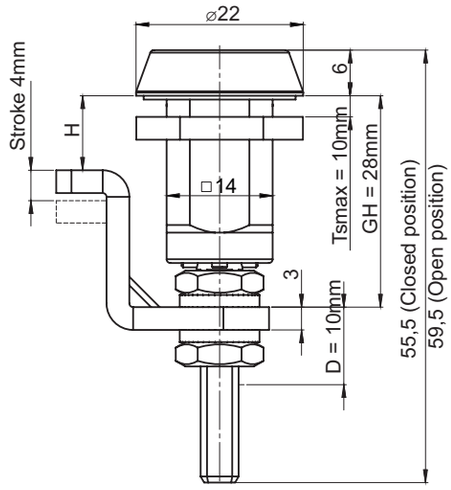

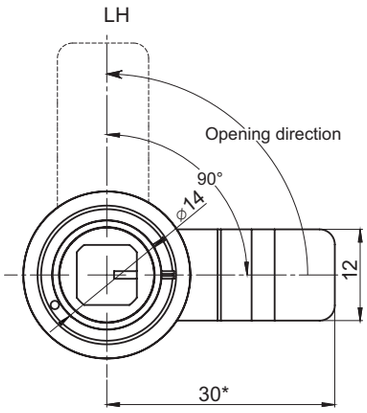

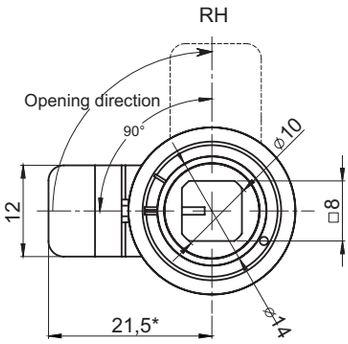

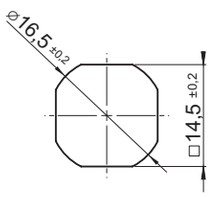

Cut out

Height adjustment H cam for lock in version B		
Cam		H
1	Bended 18mm	10 - 20
		46 - 56
2	Bended 9mm	19 - 29
		37 - 47
3	Straight	28 - 38

The lock has **IP65**.
The lock has double pressure.
The lock is fitted with the key 2.KLKW8.001
(str. 2A-112 - 2A-113).

D - the range of latch adjustment M16SD22 type B.
Ts - the thickness of sheet steel.
In lockM16SD22 type B bended can be fitted double sided.

TYPE OF LOCK	ELEMENTY SKŁADOWE	MATERIAL
M16SD22	Housing, Insert, Cam	Stainless steel

How to order: :

M16SD22 — KW8 — BL — 22

Type of lock
Type of insert
version of lock + opening direction A, B; L- left, R-right
The hight of cam
- for version A: H=13, 22, 31, 40
- for version B: Cam 1, 2, 3 (chart above)

Inserts	
T9	KW 8

Lock M22SD22

stainless steel

IP65

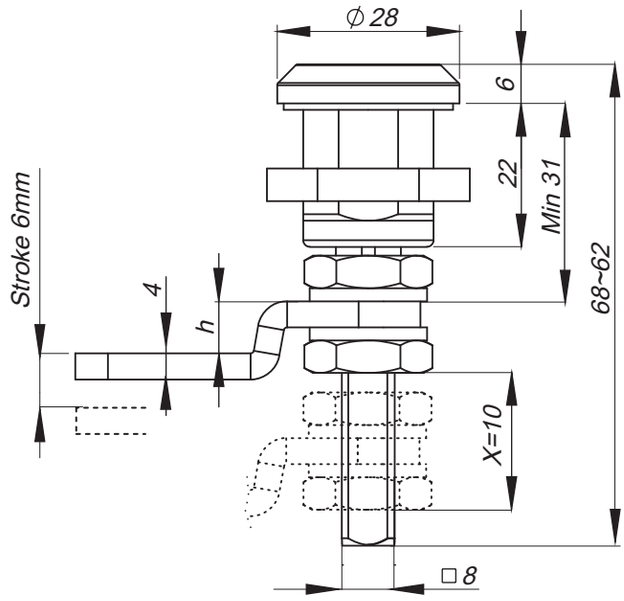

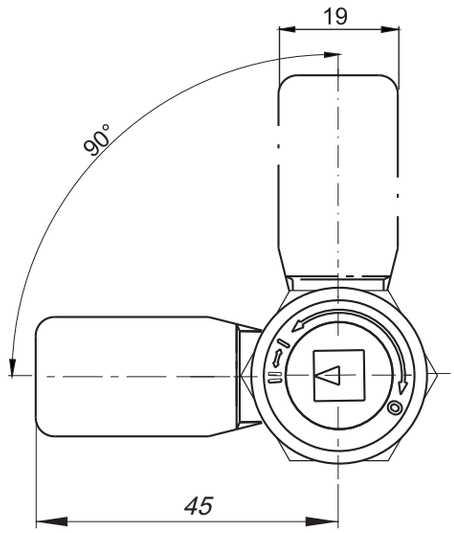

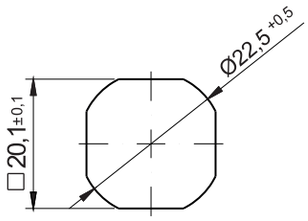

Mounting hole

Lock has IP65
The lock has two sided clamp.
The x value means the range of adjusting the bar.

Inserts	
T9	KW 8

TYPE OF LOCK	COMPONENTS	MATERIAL
M22SD22	Housing, insert	Stainless steel 304
	Cam	Stainless steel 304

How to order:

M22SD22 — T9 — 22 — SN — P

Type of lock
Type of insert
Height cam h = 22, 25, 28, 31, 34, 37, 40
Finishing
Version (L- left, P-right)

stainless steel | RoHS | LH/RH

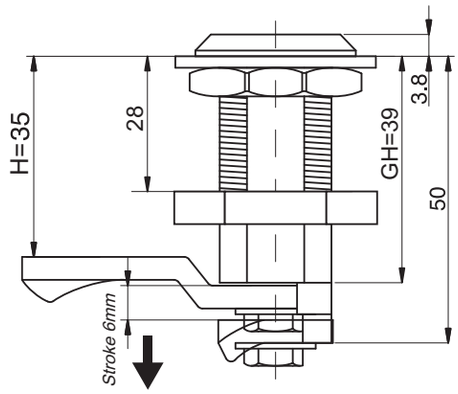

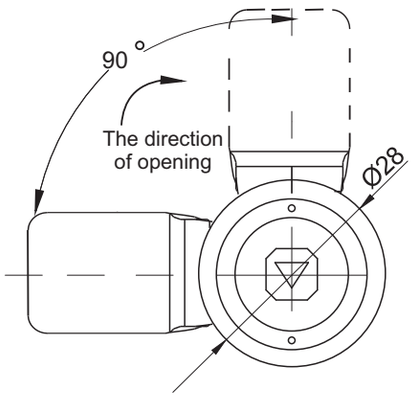

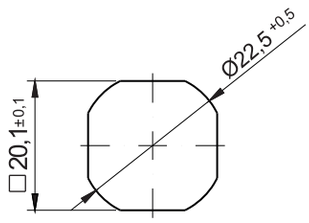

Cut out

Insert
KW 8

TYPE OF LOCK	COMPONENTS	MATERIAL
2.530.001	Housing, insert	Stainless steel
	Cam	Stainless steel

* possibility to make in another dimension

How to order:

2.530.001 — KW8

Type of lock

Type of insert

Lock M28-1, M28-2

stainless steel

NEW

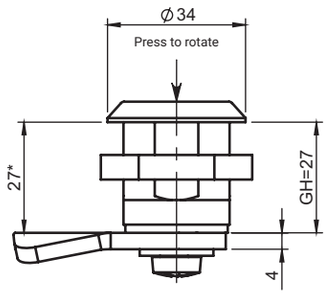

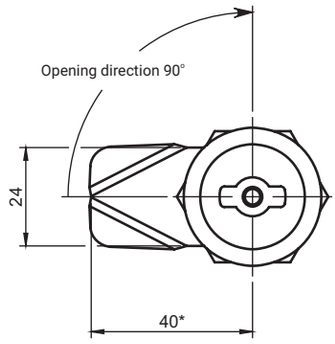

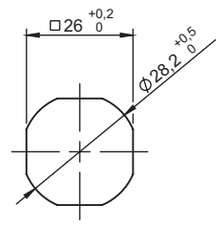

Mounting holey

Lock with protection from undesirable opening without specific key.
Rotation of locking cam is possible after pushing pin by key.
Key removal possible only in locking positon of the lock.
Lock works with key 2.KL-D5.001 (pg. 2A-112 - 2A-113).

TYPE OF LOCK	COMPONENTS	INSERT [X]	MATERIAL
M28-1	Housing, Insert, Cam	D5	Stainless steel electropolished

How to order:

Type of lock
Type of insert [X]
Material / finih

M28-1 — **D5** — **SN**

* possibility to make in another dimension

stainless steel

NEW

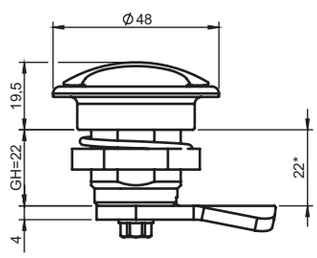

Opening direction

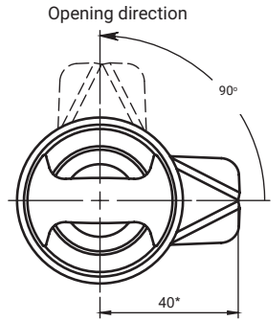

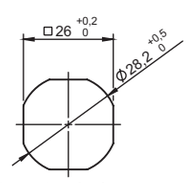

Mounting holey

TYPE OF LOCK	COMPONENTS	MATERIAL
M28-2	Housing, Insert, Cam	Stainless steel electropolished

LH/RH

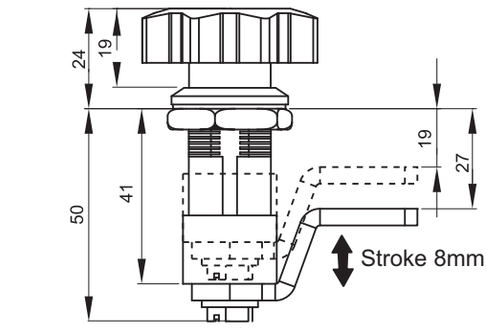

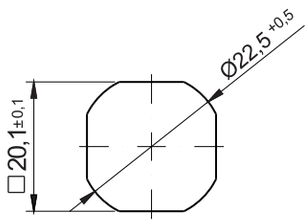

Cut out

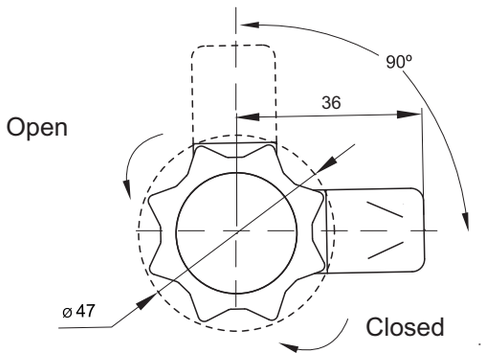

TYPE OF LOCK	COMPONENTS	MATERIAL	FINISH [C]
			Chrome
2.528.001	Housing, insert	ZAMAK 5	01
	Cam	Steel zinc plated	-

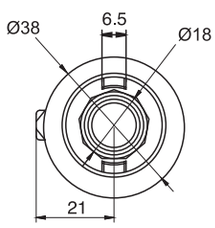

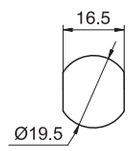

Cut out

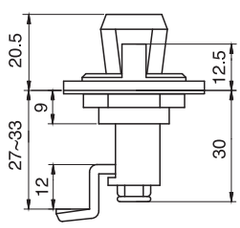

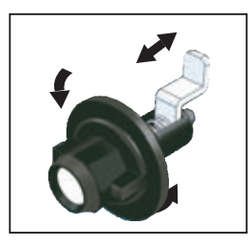

TYPE OF LOCK	COMPONENTS	MATERIAL	FINISH [C]
			RAL 9005
2.528.002	Housing, knob	Polyamide	07
	Cam	Steel zinc plated	-

How to order:

2.528.001 — C

Type of lock

Finish

Lock 2.525, 2.527

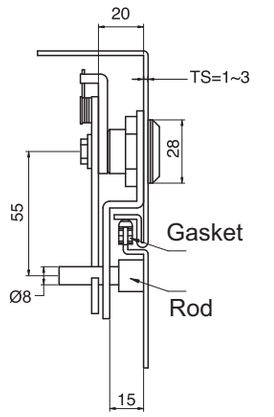

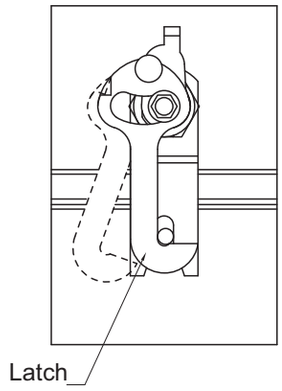

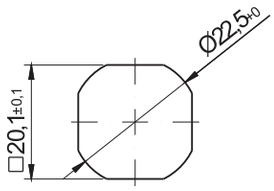

Cut out

TYPE OF LOCK	COMPONENTS	MATERIAL	FINISH [C]
			Chrome
2.525.001	Housing, Insert	ZAMAK5	01
	Latch	Steel zinc plated	-

IP54

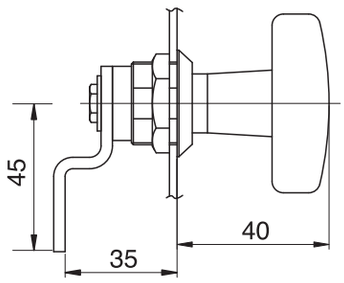

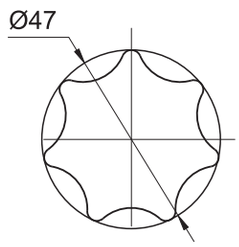

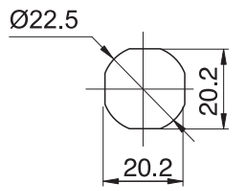

Cut out

Turn angle 90°

TYPE OF LOCK	COMPONENTS	MATERIAL	FINISH [C]
			RAL 9005
2.527.001	Housing	ZAMAK 5	04
	Insert	Polyamide	04
	Cam	Steel zinc plated	-

How to order:

2.525.001 — C

Type of lock

Finish

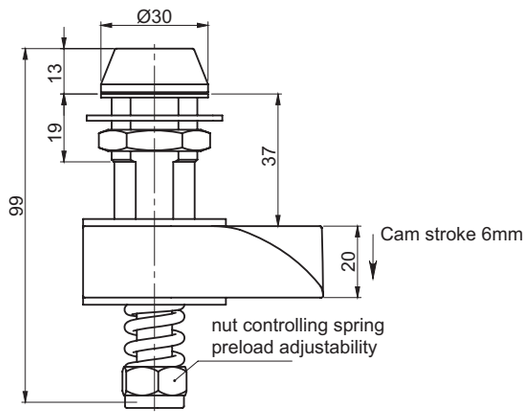

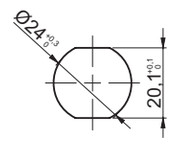

Cut out

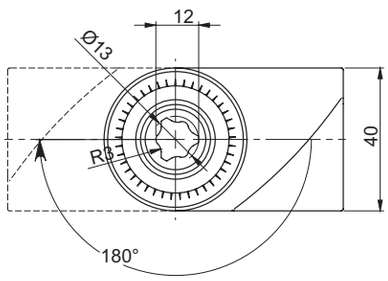

INSERTS	
T10	BT

TYPE OF LOCK	COMPONENTS	MATERIAL
M24C	Housing, Insert	Stainless steel
	Cam	Polyamide
	Nut	Brass

How to order:

M24C — T10 — SN

Type of lock

Type of insert

Finish

Lock is equiped with spring preload adjustability

Lock M19DC, M22DC

RoHS

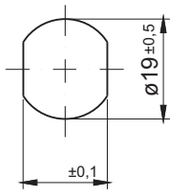

Cut Out

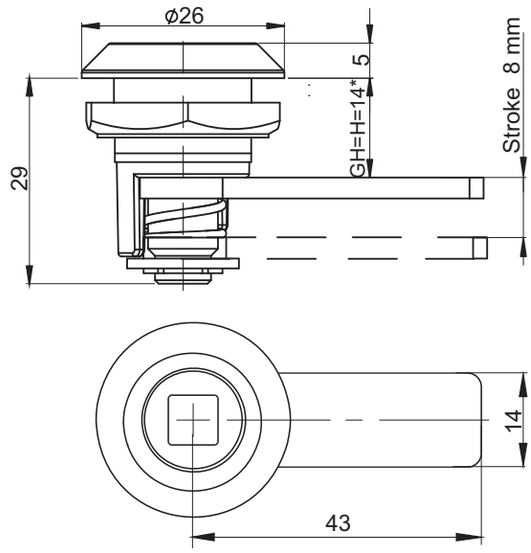

INSERT			FINISH [C]			
			Chrome	Nickel	RAL 9005	RAL 7035
T9	KW 8	S	01	02	04	05

TYPE OF LOCK	COMPONENTS	MATERIAL
M19DC	Housing	ZAMAK5
	Cam, insert	Steel zinc plated

RoHS

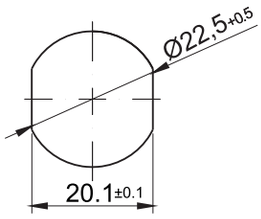

Cut Out

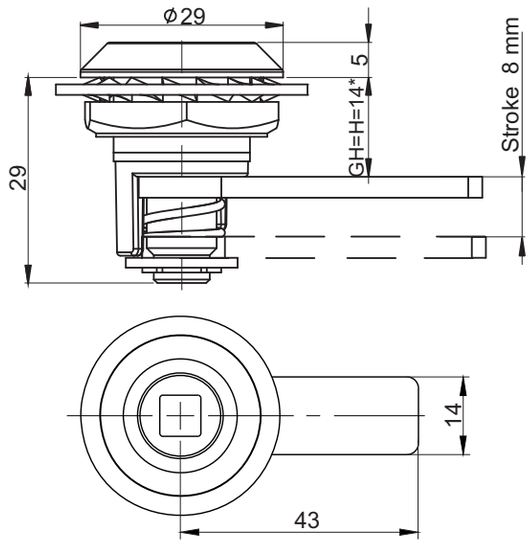

INSERT			FINISH [C]			
			Chrome	Nickel	RAL 9005	RAL 7035
T9	KW 8	S	01	02	04	05

TYPE OF LOCK	COMPONENTS	MATERIAL
M22DC	Housing	ZAMAK5
	Cam, insert	Steel zinc plated

How to order : M22DC — T9 — 14 — C

- Type of lock
- Type of insert
- Height cam H = 14, 17, 20
- Finish

* possibility to make in another dimension

Lock with self-locking cam JZ-3522

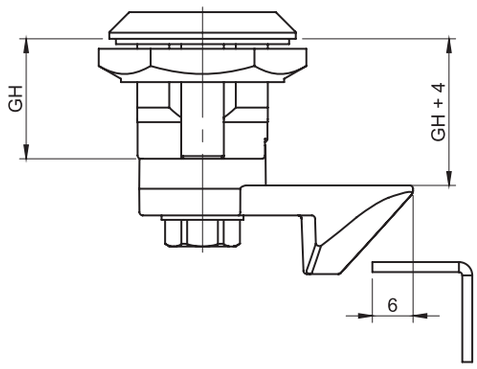

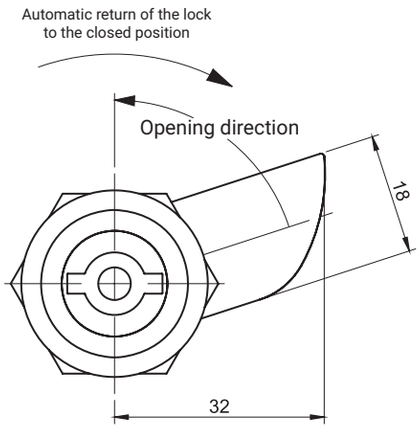

Lock in the left version,
the right version is a mirror reflection

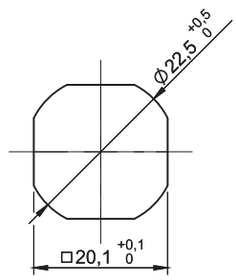

Cut out

LH

Lock with cam
on left wersion

RH

Locks with cam
on right wersion

CATALOGUE NUMBER	VERSION	MATERIAL
JZ-3522L	Left	ZAMAK
JZ-3522P	Right	

COMPATIBLE LOCKS M22			INSERTS			FINISH [C]			
TYPE OF LOCK	GH	MATERIAL							
M22-3	18	ZAMAK				Chrome	Nickel	RAL9005	RAL7035
M22-30	30								
M22-60	60		KW8	D5	T9	01	02	04	05

How to order :

M22-3 — D5.01 — JZ-3522L

- Type of lock
- Type of insert
- Finish[C]
- Cam catalogue number

Snap lock M22-6

NEW

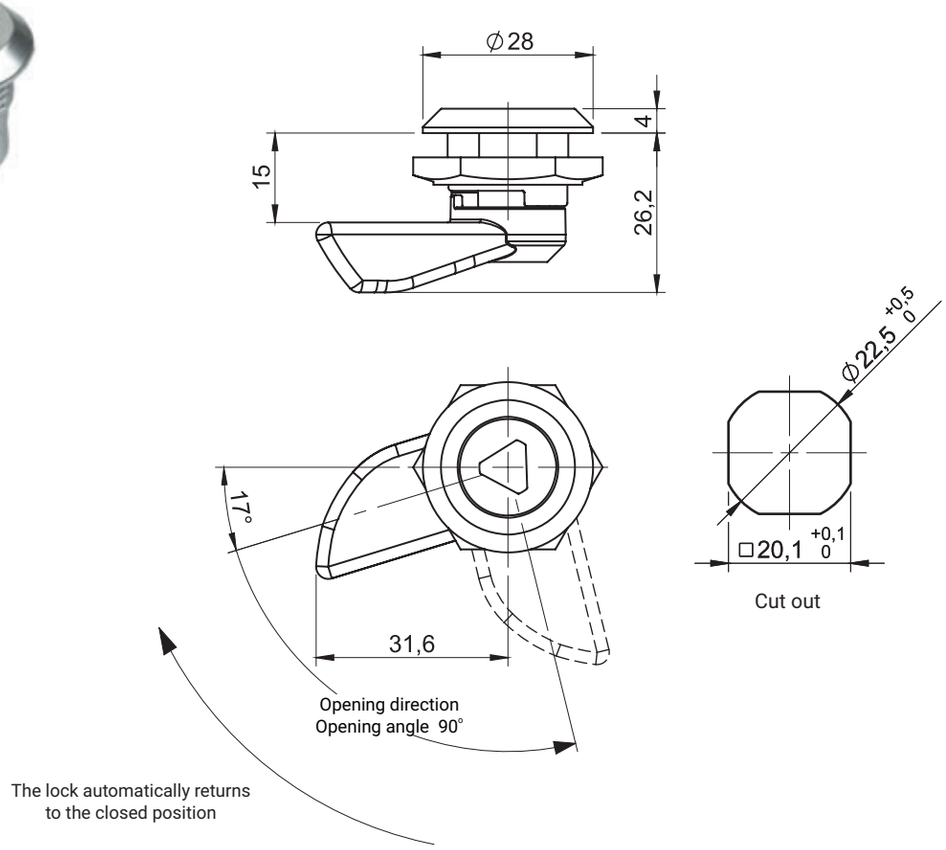

TYPE OF LOCK	INSERT	COMPONENTS	MATERIAL	FINISH [C]
				Chrome
M22-6	T8	Housing, Insert, Latching cam	ZAMAK	01

How to order:

M22-6 — T8 — 01

Type of lock
Type of insert
Finish [C]

Lock with padlockable mechanism

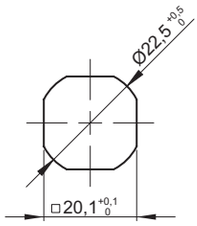

Cut out

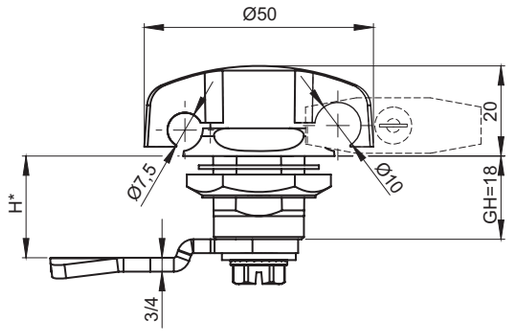

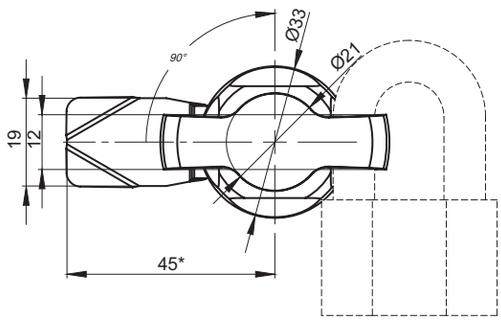

CATALOGUE NUMBER	COMPONENTS	MATERIAL	FINISH [C]
M22PM-K	Housing, Insert	ZAMAK	RAL 9005
			04
	Cam	Steel	-
M22PM-K.SN	Housing, Insert, Cam	Stainless steel	-

How to order: **M22PM-K** — **H.G** — **C**

Type of lock

Type of cam

Finish

Notes:
Lock M22PM-K is compatible with cams without limiter from groups:
15, 16, 18, 35, 36, JK-10018, J-6000.01, J-6000.02

H.G - the cam unbending dimension (H-locking height, G-group)

State the cam thickness at order.
Padlock is not included.
* different dimensions available

Lock M22BK

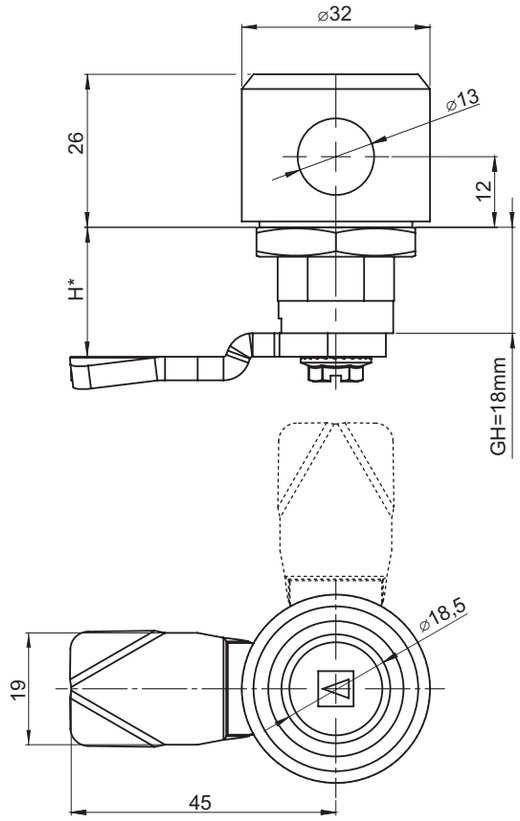

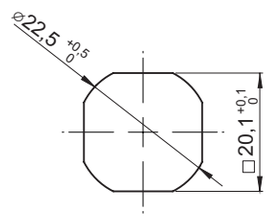

Cut out

INSERTS		
D5	KW 6	T8

TYPE OF LOCK	COMPONENTS	MATERIAL	FINISH [C]
			RAL 9005
M22BK	Housing, Insert	ZAMAK	04
	Cam	Zinc plated steel	-

How to order :

M22BK — KW8 — H.G. — C

Type of lock
Type of insert
Type of cam
Finish

The lock is fiited with cams without the limiter from the group: 15, 19, 35 (pg. 1C-12, 1C-14, 1C-19),
H.G - the cam unbending dimension (H-locking height, G-group)

Lock 2.506, 2.M19

Lock with padlockable mechanism

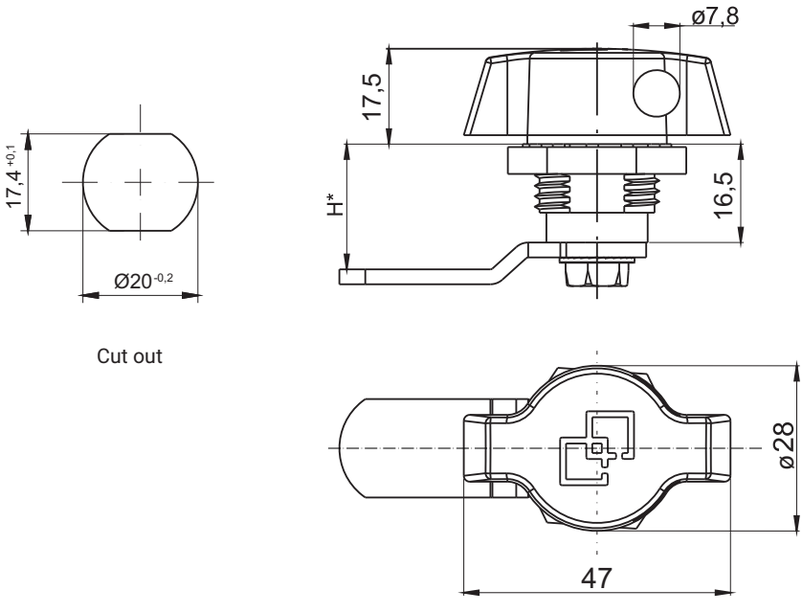

Cut out

TYPE OF LOCK	COMPONENTS	MATERIAL	FINISH [C]
			Chrome
2.506.001	Housing, Knob	ZAMAK5	01
	Cam	Steel zinc plated	-

How to order: **2.506.001** — **H.G** — **C**

Type of lock

Type of cam

Finish

H.G - the cam unbending dimension (H-locking height, G-group) to be chosen from pages 1C-9 to 1C-22
The lock is fitted with cams from the group: 15, 16, 35, 36

IP54

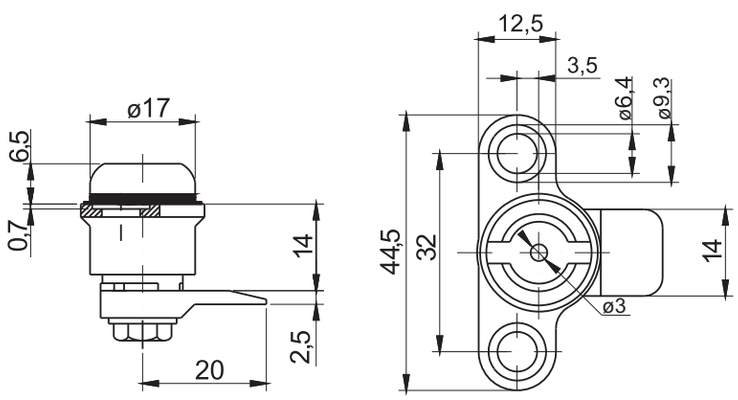

TYPE OF LOCK	COMPONENTS	MATERIAL	FINISH [C]
			Nickel
2.M19.001	Housing, Cam	ZAMAK5	02

How to order: **2.M19.001** — **C**

Type of lock

Finish

Lock 2.630

Left version
2.630.001

Right version
2.630.002

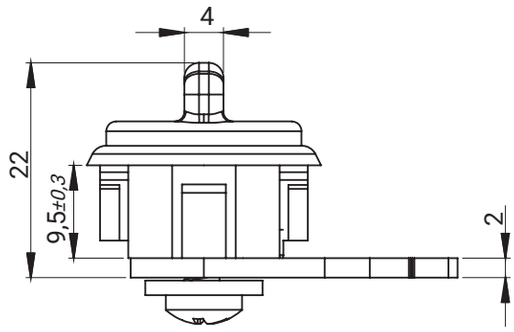

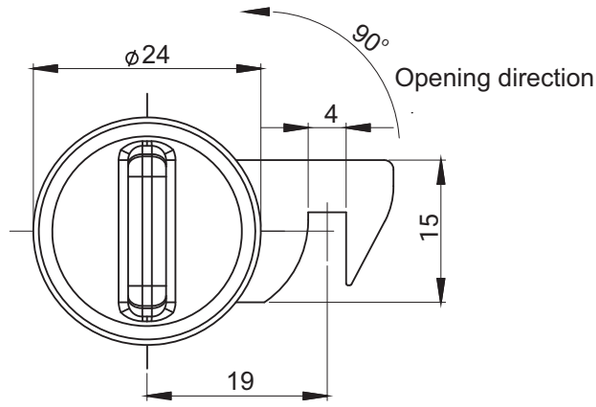

Castle in the closed position

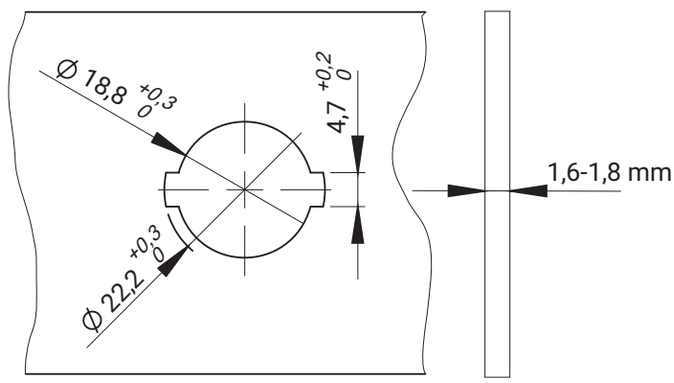

Cut out

Note: The snap lock adapted to components made of plastic artificial.

Lock automatically after opening back to the closed position.

TYPE OF LOCK	COMPONENTS	MATERIAL	FINISH [C]	
			RAL 9005	RAL 7035
2.630.001 **2.630.002**	Housing, insert	Polyamide	07	08
	Cam	Steel zinc plated	-	-

How to order: 2.630.001 — C

Type of lock

Finish

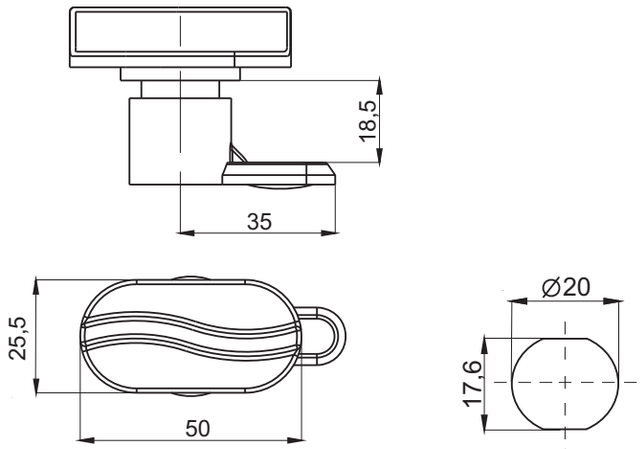

Cut out

TYPE OF LOCK	COMPONENTS	MATERIAL	FINISH [C]
			RAL 9005
2.603.001	Housing, insert	Polyamide	07

How to order :

2.603.001 — C

Type of lock

Finish

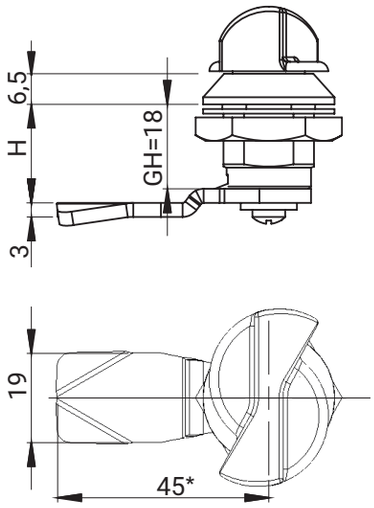

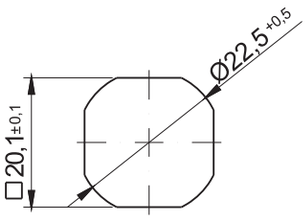

Cut out

TYPE OF LOCK	COMPONENTS	MATERIAL	FINISH [C]	
			RAL 9005	RAL 7035
M22D-M	Housing, insert	Polyamide	07	08
	Cam	Steel zinc plated	-	-

How to order :

M22D-M — H.G — C

Type of lock

Type of cam (page 1C-9 - 1C-24)

Colour (RAL 9005, RAL 7035)

* possibility to order in another dimension
H.G - the cam unbending dimension (H-locking height, G-group)

Lock 2.616

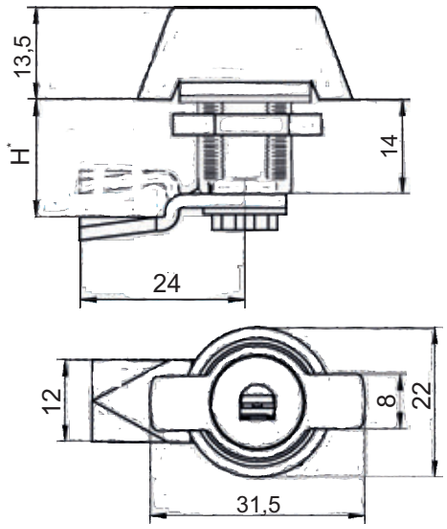

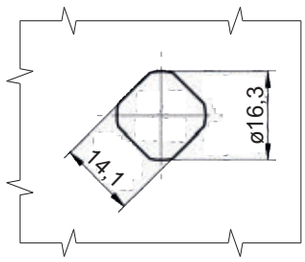

Cut out

Note: The lock is mounted with the key code 2233X

CATALOGUE NUMBER	COMPONENTS	MATERIAL	FINISH [C]	
			Chrome	RAL 9005
2.616.001-H	Housing	ZAMAK5	-	04
	Cam	Steel zinc plated		04
2.616.101-H	Housing	ZAMAK5	01	-
	Cam	Steel zinc plated	01	-

* possibility to order in another dimension

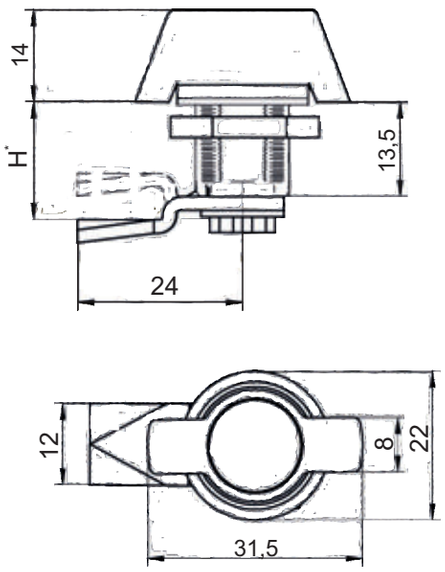

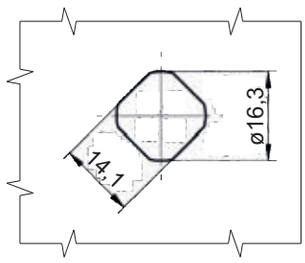

Cut out

CATALOGUE NUMBER	COMPONENTS	MATERIAL	FINISH [C]	
			Chrome	RAL 9005
2.616.002-H	Housing	ZAMAK5	-	04
	Cam	Steel zinc plated	-	04
2.616.102-H	Housing	ZAMAK5	01	-
	Cam	Steel zinc plated	01	-

* possibility to order in another dimension

How to order : 2.616.002 — H — C

Type of lock

The height of cam H

Finish

NEW

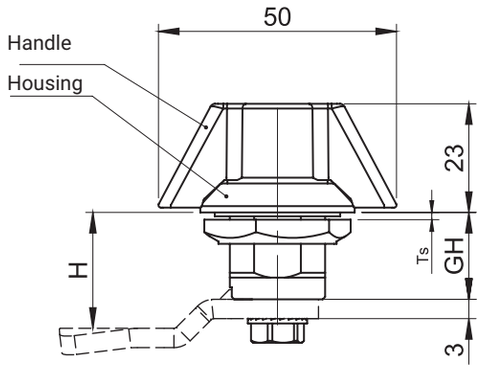
50
Handle
Housing
23
H
Ts
GH
3

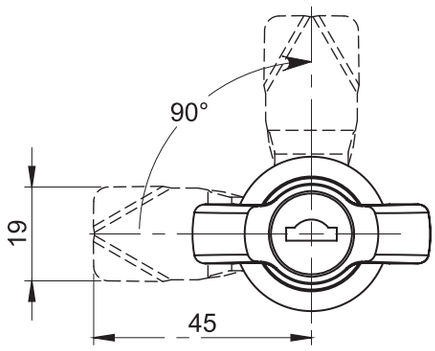
90°
19
45

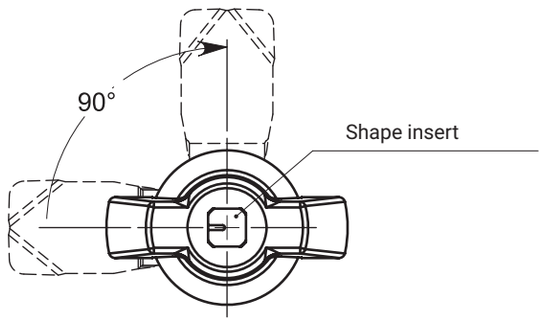
90°
Shape insert

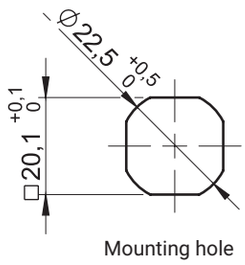
Ø22,5 +0,5 0
□20,1 +0,1 0
Mounting hole

Locks with Butterfly Handle 2.PM, 2.PMPA

ROZTOCZE

LOCK WITH METAL BUTTERFLY HANDLE					
GH VALUE	CATALOGUE NUMBER			MATERIAL AND FINISH	
	Cylinder 1333	Cylinder - RK	Without cylinder	Handle	Housing
				ZAMAK	
GH=18 Tsmax-8	2.PM18.002	2.PM18.004	2.PM18.006	RAL9005	
	2.PM18.001	2.PM18.003	2.PM18.005	Chrom	
GH=30 Tsmax-18	2.PM30.002	2.PM30.004	2.PM30.006	RAL9005	
	2.PM30.001	2.PM30.003	2.PM30.005	Chrom	
GH=40 Tsmax-28	2.PM40.002	2.PM40.004	2.PM40.006	RAL9005	
	2.PM40.001	2.PM40.003	2.PM40.005	Chrom	
GH=60 Tsmax-48	2.PM60.002	2.PM60.004	2.PM60.006	RAL9005	
	2.PM60.001	2.PM60.003	2.PM60.005	Chrom	

LOCK WITH POLYAMIDE BUTTERFLY HANDLE					
GH VALUE	CATALOGUE NUMBER			FINISH [C]	
	Cylinder 1333	Cylinder - RK	Without cylinder	Handle	Housing
				Poliamid*	ZAMAK
GH=18 Tsmax-8	2.PMPA18.002	2.PMPA18.004	2.PMPA18.006	RAL9005	RAL9005
	2.PMPA18.001	2.PMPA18.003	2.PMPA18.005		Chrome
GH=30 Tsmax-18	2.PMPA30.002	2.PMPA30.004	2.PMPA30.006		RAL9005
	2.PMPA30.001	2.PMPA30.003	2.PMPA30.005		Chrome
GH=40 Tsmax-28	2.PMPA40.002	2.PMPA40.004	2.PMPA40.006		RAL9005
	2.PMPA40.001	2.PMPA40.003	2.PMPA40.005		Chrome
GH=60 Tsmax-48	2.PMPA60.002	2.PMPA60.004	2.PMPA60.006		RAL9005
	2.PMPA60.001	2.PMPA60.003	2.PMPA60.005		Chrome

METAL LOCK WITH BUTTERFLY HANDLE WITH SHAPED INSERT					
GH VALUE	CATALOGUE NUMBER		MATERIAL AND FINISH		
	Shape insert KW8	Shape insert T8	Handle	Housing	Insert
			ZAMAK		Steel
GH=18 Tsmax-8	**2.PM18-KW8**	**2.PM18-T8**	RAL9005		

How to order:

2.PM18.002 — **H.G**

Catalogue number

Type of cam

where:
H.G:
H - height locking
G - cams range
Ts - Thickness door
Lock is compatible with all cams from range:: 11, 12, 13, 14, 18, 31, 32, 34, 38, JK-1610.01
Each lock with a cylinder is supplied with two keys.
* The 2.PMPA lock handle is a two-component, injection-moulded plastic on an internal element made of metal (ZAMAK).
Lock with a butterfly handle and shaped insert. 2.PM18-KW8(T8) allows emergency opening by means of a handle.
The KW8 or T8 key is used to open the standard butterfly lock, which can be operated as a standard.

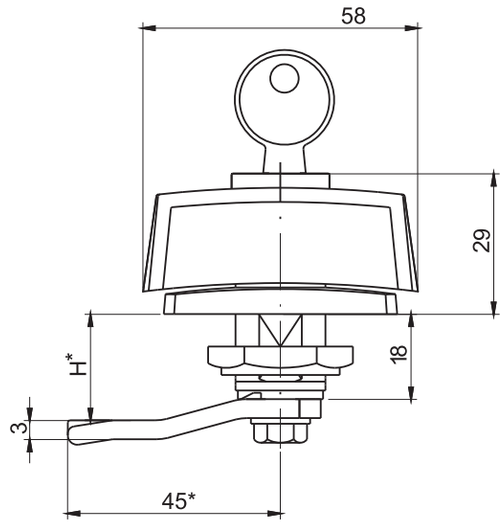

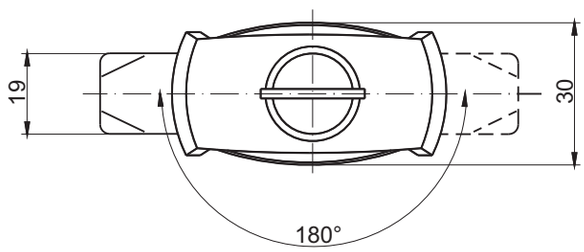

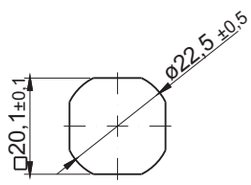

Cut out

TYPE OF LOCK	COMPONENTS	MATERIAL	FINISH [C]	
			RAL 9005	RAL 7035
RW300	Housing, knob	Polyamide	07	08
	Cam	Steel zinc plated	-	-

How to order:

RW300 — H.G — 1333 — C

Type of lock

Height cam H (str. 1C-9 - 1C-22)

Key code

Finish [C]

* possibility to order in another dimension
H.G - the cam unbending dimension (H-locking height, G-group)
The lock is fitted with cams from the group: 11, 12, 13, 14, 18, 31, 32, 33, 34, 38, JZ-002, JK-1610.01 (page 1C-7 - 1C-20)

Lock with handle L

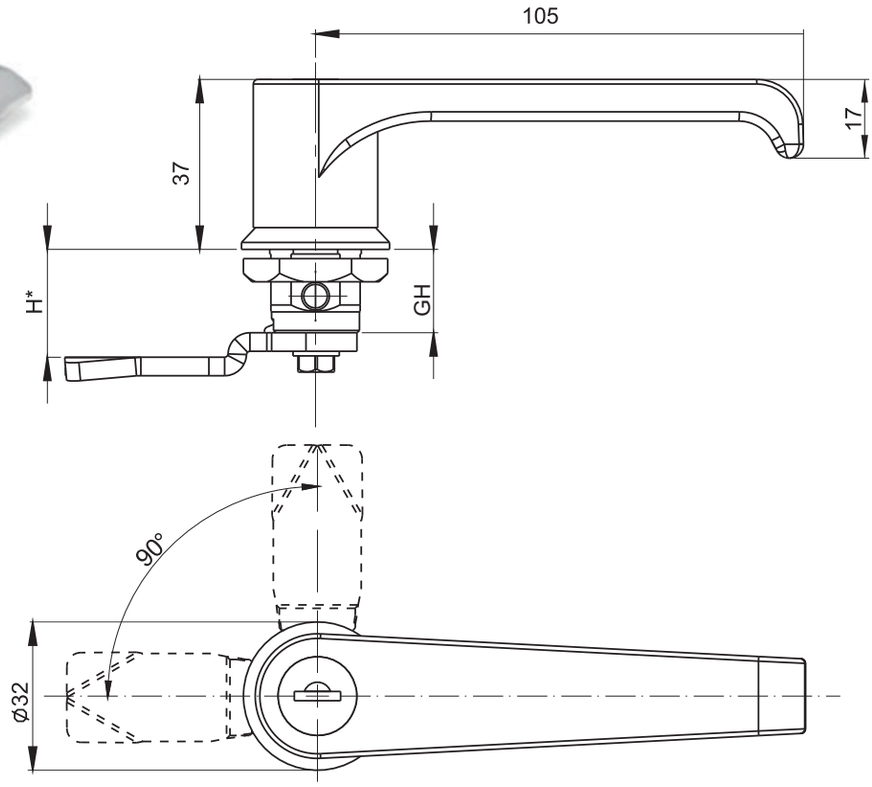

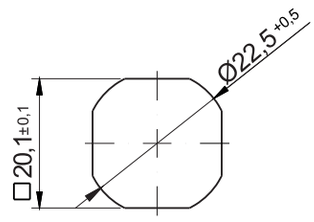

Cut out

NAME	COMPONENTS
Housing, knob	ZAMAK5**
Cam	Steel zinc plated**

NAME	CATALOGUE NUMBER			FINISH [C]
	Cylinder 1333	Cylinder - RK	Without cylinder	
L 18 (GH=18)	2.L18.002	2.L18.004	2.L18.006	RAL 9005
	2.L18.001	2.L18.003	2.L18.005	Chrome
L 30 (GH=30)	2.L30.002	2.L30.004	2.L30.006	RAL 9005
	2.L30.001	2.L30.003	2.L30.005	Chrome
L 40 (GH=40)	2.L40.002	2.L40.004	2.L40.006	RAL 9005
	2.L40.001	2.L40.003	2.L40.005	Chrome
L 60 (GH=60)	2.L60.002	2.L60.004	2.L60.006	RAL 9005
	2.L60.001	2.L60.003	2.L60.005	Chrome

How to order : 2.L30.003 — H.G

Catalogue number

Height cam H (1C-9 - 1C-22)

* possibility to order in another dimension
** possibility to use stainless steel 1.4404
The lock is fitted with cams from the group: 11, 12, 13, 14, 18, 31, 32, 33, 34, 38, JZ-002, JK-1610.01 (page 1C-9 - 1C-22)

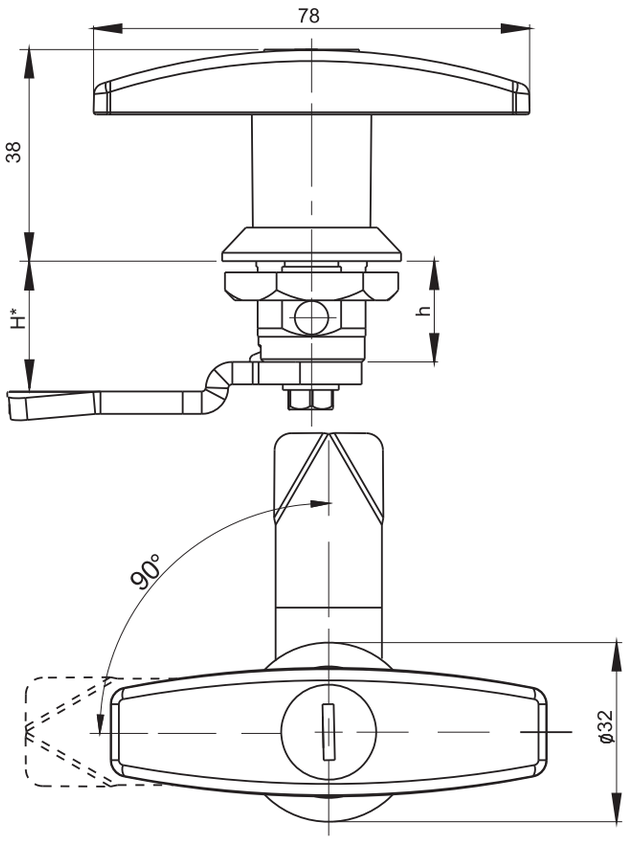

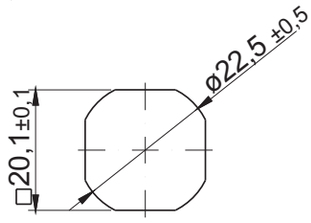

Cut out

NAME	COMPONENTS
Housing, handle	ZAMAK5**
Cam	Steel zinc plated**

NAME	CATALOGUE NUMBER			FINISH [C]
	Cylinder 1333	Cylinder - RK	Without cylinder	
T 18 (GH=18)	2.T18.002	2.T18.004	2.T18.006	RAL 9005
	2.T18.001	2.T18.003	2.T18.005	Chrome
T 30 (GH=30)	2.T30.002	2.T30.004	2.T30.006	RAL 9005
	2.T30.001	2.T30.003	2.T30.005	Chrome
T 40 (GH=40)	2.T40.002	2.T40.004	2.T40.006	RAL 9005
	2.T40.001	2.T40.003	2.T40.005	Chrome
T 60 (GH=60)	2.T60.002	2.T60.004	2.T60.006	RAL 9005
	2.T60.001	2.T60.003	2.T60.005	Chrome

How to order :

2.T30.003 — H.G

Catalogue number

Height cam H (1C-9 - 1C-22)

* possibility to order in another dimension
** possibility to use stainless steel 1.4404
The lock is fitted with cams from the group: 11, 12, 13, 14, 18, 31, 32, 33, 34, 38, JZ-002, JK-1610.01 (page 1C-9 - 1C-22)

T-Handle Dust Cover 2.904.010

NEW

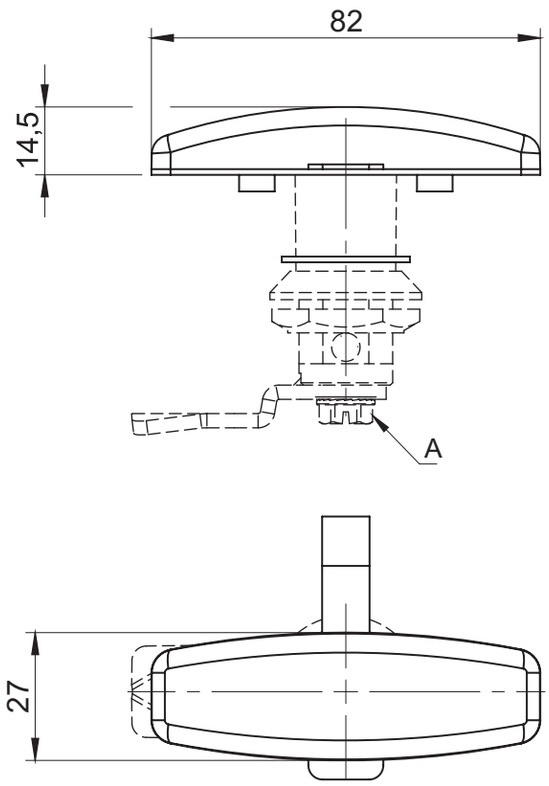

In order to mount the dust cover on the T-handle lock, remove the knob from the lock body by unscrewing the screw (A), then pass the cover through the lock pivot. In order to disassemble repeat in reverse order.

CATALOGUE NO.	COMPATIBLE LOCKS	MATERIAL	FINISH [C]
			RAL 9005
2.904.010	2.T	Elastic Polymer	07
	1B.RW510		

Internal handle 1C.DB.002

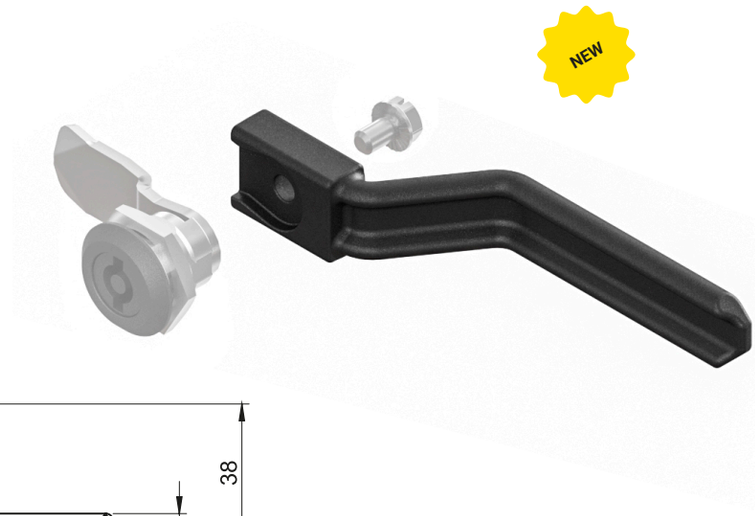

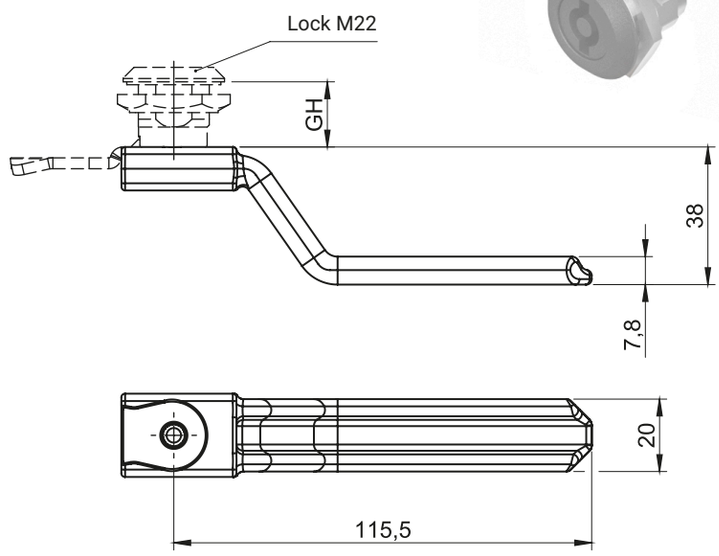

CATALOGUE NUMBER	COMPONENTS	FINISH [C]		LOCK GH VALUE
		RAL 9005	RAL 7035	
1C.DB.002	Internal handle (Polyamide PA6 GF30) Galvanized screw	07	08	18
				30
				40
				60

How to order:

1C.DB.002 — **C** — **GH**

Catalogue number

Finish

Height GH of the lock to which the handle is to be fitted

Lock 2.800

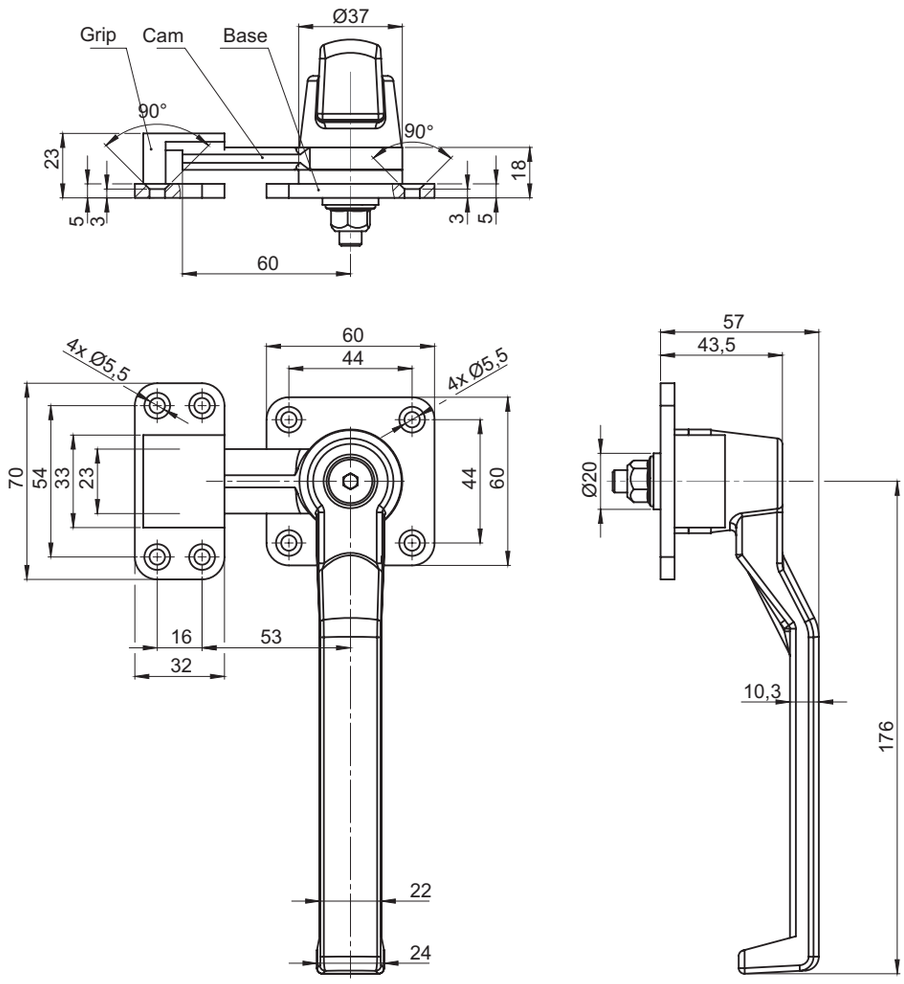

TYPE OF LOCK	COMPONENTS	MATERIAL	FINISH [C]
			RAL 9005
2.800.001	Handle	Aluminium	04
	Cam, Base, Grip	Steel zinc plated	-

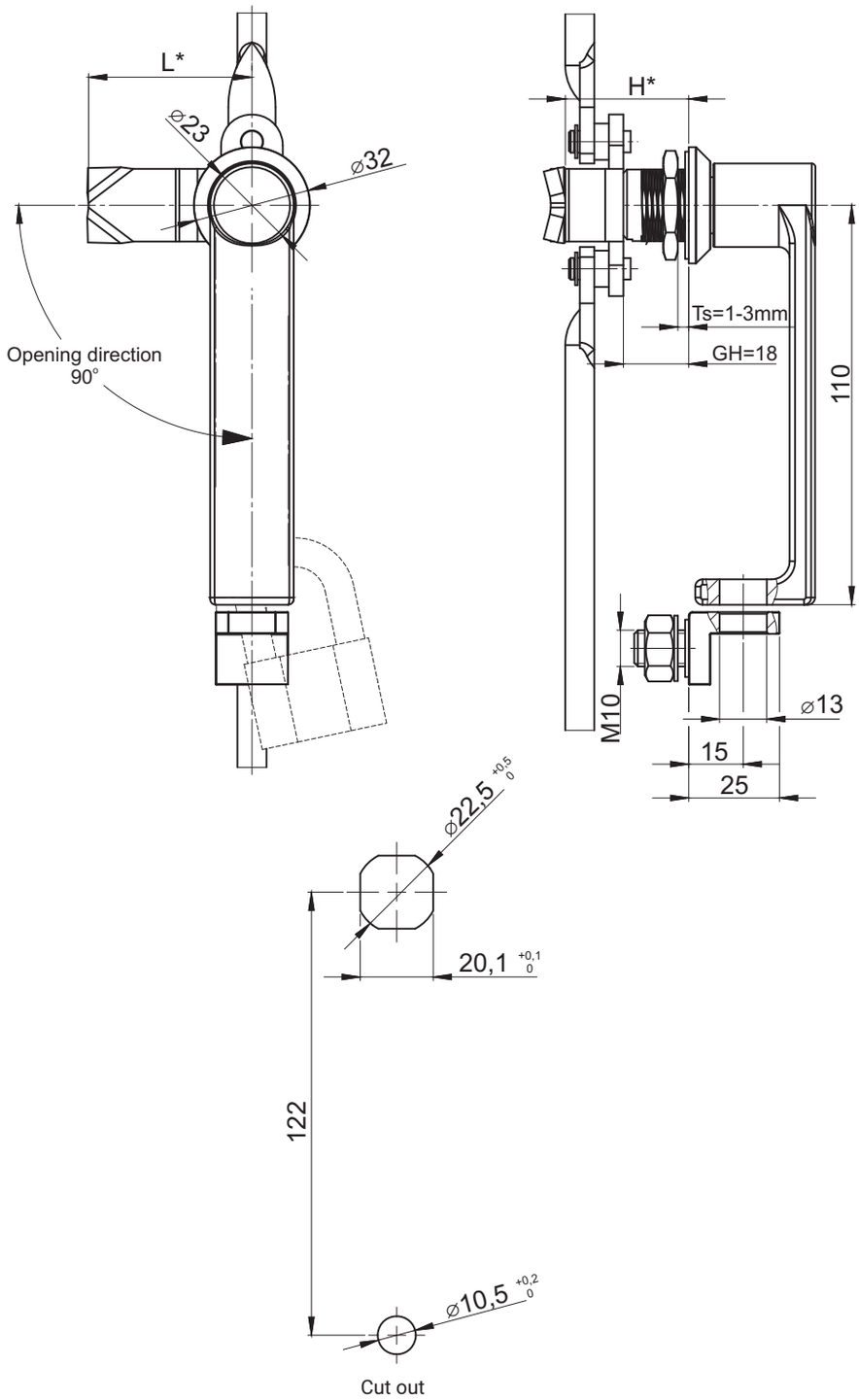

The lock fitted to cams with fasteners form the group: 12, 32, (pg. 1C-10, 1C-17)
Rods page 1C-4, 1C-5,
Ts - thickness of a metal sheet

CATALOGUE NO.	COMPONENTS	MATERIAL	FINISH [C]
			RAL 9005
2.540.001	Handle, Housing, Blockade	ZAMAK	04
	Cam	Zinc plated steel	-

Lock 2.531, 2.532

stainless steel

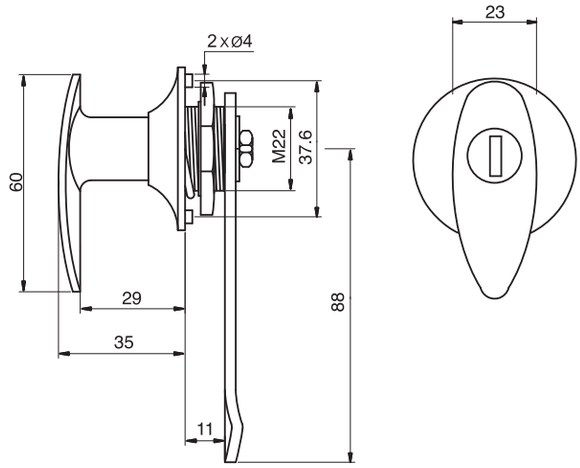

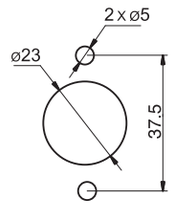

Cut out

TYPE OF LOCK	KEY CODE	COMPONENTS	MATERIAL
2.531.001	101	Housing, cam	Stainless steel
2.531.101	-	Housing, cam	Stainless steel

stainless steel

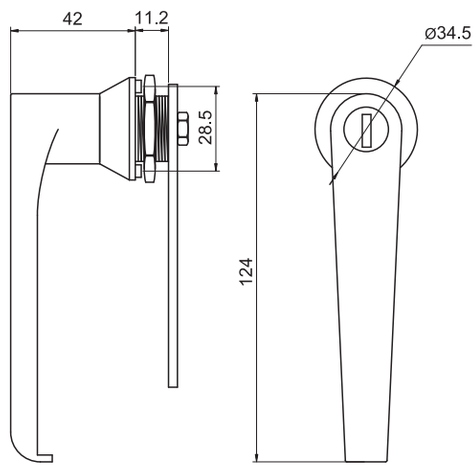

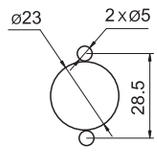

Cut out

TYPE OF LOCK	KEY CODE	COMPONENTS	MATERIAL
2.532.001	101	Housing, cam	Stainless steel
2.532.101	-	Housing, cam	Stainless steel

stainless steel

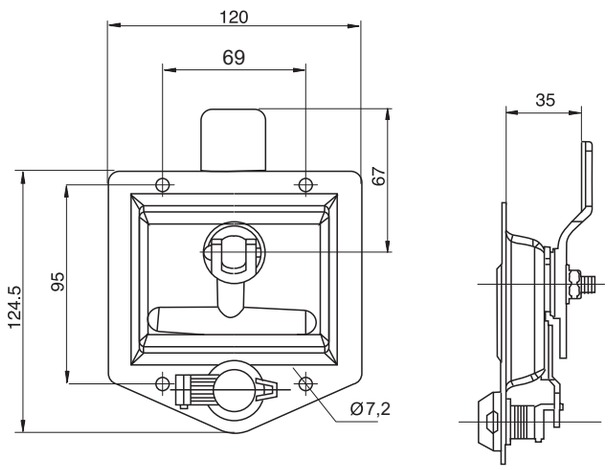

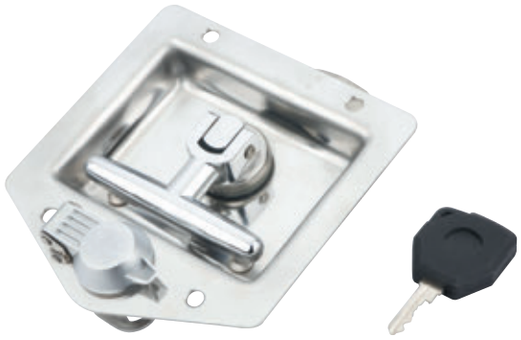

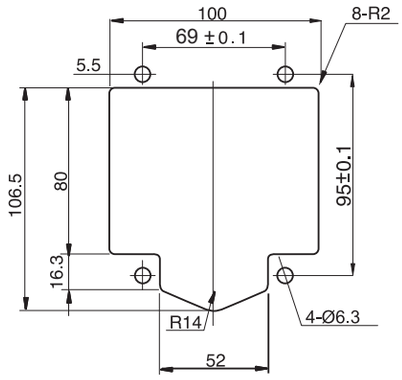

Cut out

TYPE OF LOCK	COMPONENTS	MATERIAL
2.526.001	Housing	Stainless steel
	Blocade	ZAMAK5

stainless steel

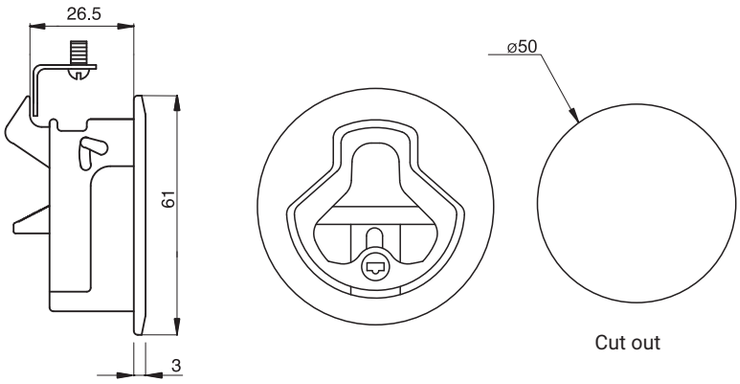

Cut out

Note:
Includes 1 pair of keys
Lock sold with cylinder

TYPE OF LOCK	COMPONENTS	MATERIAL
2.544.001	Housing	Stainless steel
	Handle	

Lock 2.608, 2.609

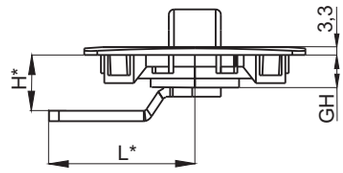

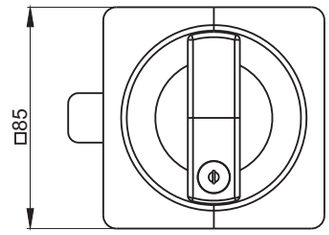

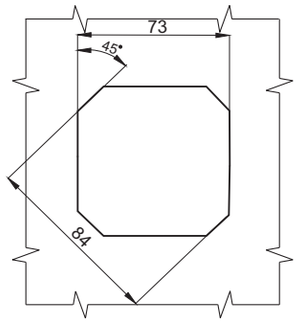

Cut out

H	Cam 1 pkt	Cam 2 pkt	Cam 3 pkt
	GH=12,5		
2	601	625	631
3,5	602		632
6,5	603		633
9,5	604		634
12,5	605		635
15,5	606		636
18,5	607		637
21,5	608		638

Tab. The cam codes to order

TYPE OF LOCK	COMPONENTS	MATERIAL	FINISH [C]	
			Chrome	RAL 9005
2.608.001	Housing	Polyamide	-	07
	Handle	ZAMAK	01	-
	Cam	Steel zinc plated	-	-

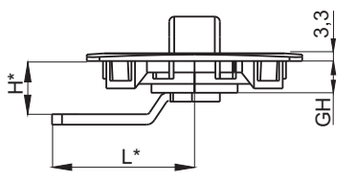

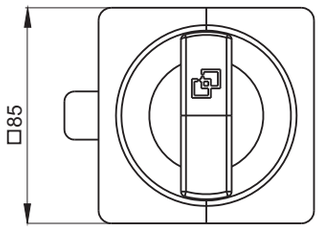

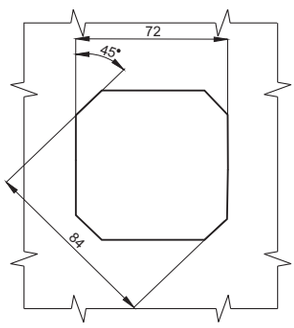

Cut out

H	CAM 1 PKT	CAM 2 PKT	CAM 3 PKT
	GH=12,5		
2	601	625	631
3,5	602		632
6,5	603		633
9,5	604		634
12,5	605		635
15,5	606		636
18,5	607		637
21,5	608		638

Tab. The cam codes to order

TYPE OF LOCK	COMPONENTS	MATERIAL	FINISH [C]	
			Chrome	RAL 9005
2.609.001	Housing	Polyamide	-	07
	Handle	ZAMAK	01	-
	Cam	Steel zinc plated	-	-

* possibility to order in another dimension

How to order : 2.609.001 — 601 — C

Type of lock

Type of cam

Finish

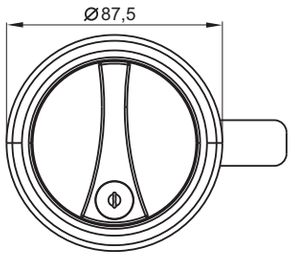

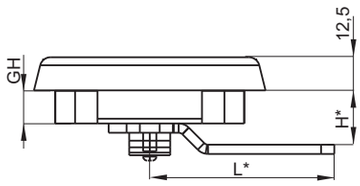

H	CAM 1 PKT	CAM 2 PKT	CAM 3 PKT
	GH=12,5		
2	601	625	631
3,5	602		632
6,5	603		633
9,5	604		634
12,5	605		635
15,5	606		636
18,5	607		637
21,5	608		638

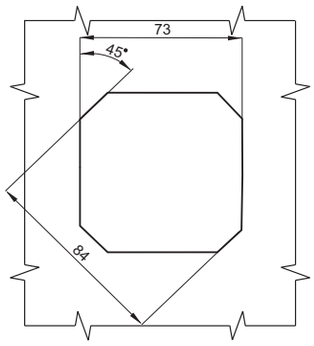

Cut out

Tab.1 The cam codes to order

TYPE OF LOCK	COMPONENTS	MATERIAL	FINISH [C]	
			RAL 9005	RAL 7035
2.606.001	Housing	Polyamide	07	-
	Handle	ZAMAK5	-	05
	Cam	Steel zinc plated	-	-

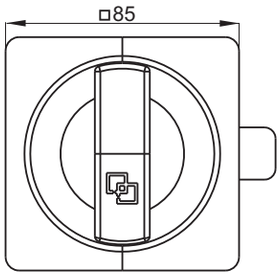

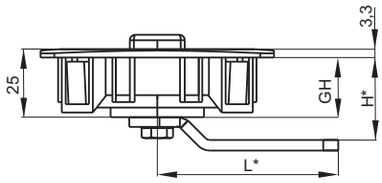

H	CAM 1 PKT	CAM 2 PKT	CAM 3 PKT
	GH=20,5		
11,2	601	625	631
12,7	602		632
15,7	603		633
18,7	604		634
21,7	605		635
24,7	606		636
27,7	607		637
30,7	608		638

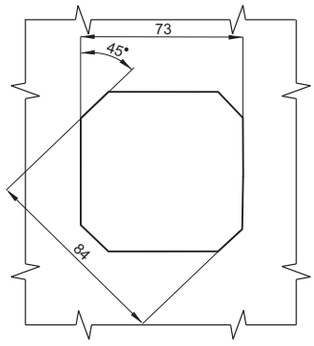

Cut out

Tab.1 The cam codes to order

TYPE OF LOCK	COMPONENTS	MATERIAL	FINISH [C]	
			Chrome	RAL 9005
2.607.001	Housing	Polyamide	-	07
	Handle	ZAMAK5	01	-
	Cam	Steel zinc plated	-	-

* possibility to order in another dimension

How to order : 2.606.001 — 601 — C

Type of lock

Type of cam

Finish

Lock 2.533

2.533.101

2.533.001

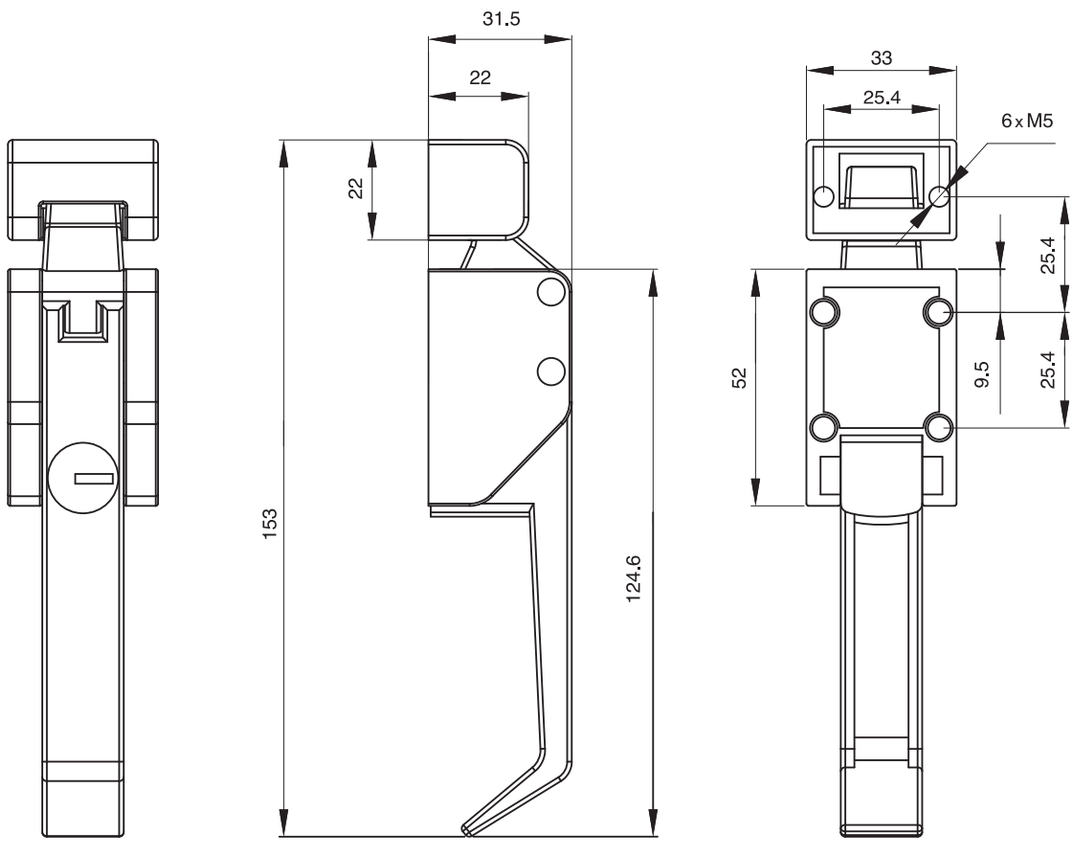

TYPE OF LOCK	COMPONENTS	MATERIAL	FINISH [C]
			RAL 9005
2.533.001	Housing	ZAMAK 5	04
2.533.101*			

* lock with patent insert

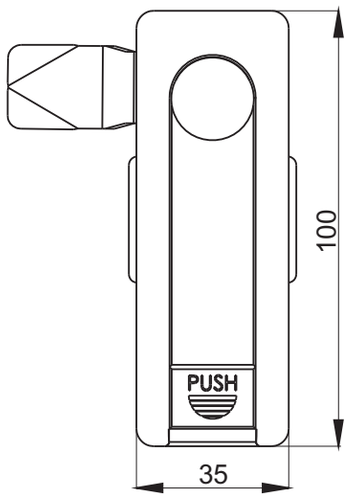

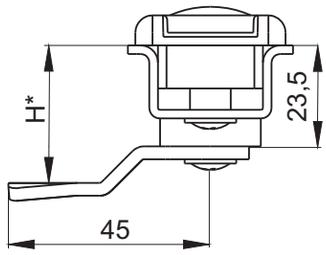

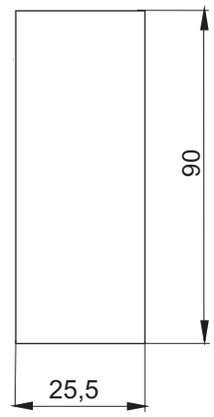

Cut out

* By ordering specify the size H lock cam.

TYPE OF LOCK	COMPONENTS	MATERIAL	FINISH [C]
			RAL 9005
2.604.001	Housing, handle	Polyamide	07
	Cam	Stainless steel	-

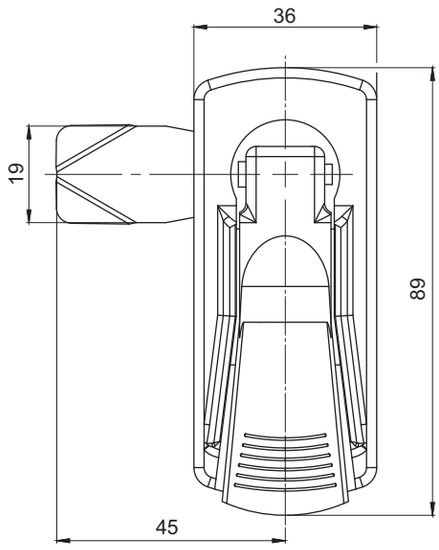

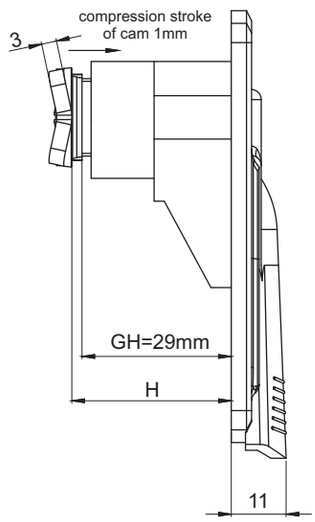

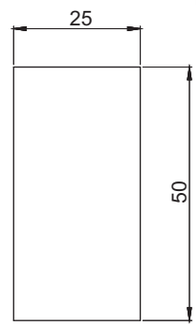

Cut out

TYPE OF LOCK	COMPONENTS	MATERIAL	FINISH [C]
			RAL 9005
2.605.001	Handle, Housing	Polyamide	07
	Cam	Zinc plated steel	-

How to order : 2.605.001 — 29 — C

Type of lock

The height of cam H=21, 25, 29, 33, 37

Finish

The lock has the stroke of the cam offsetting the clearence.

Lock 2.613

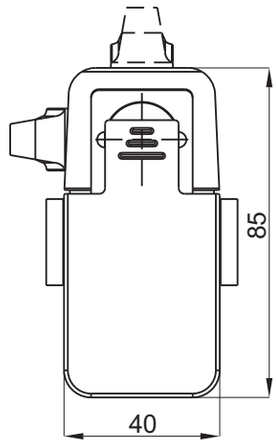

2.613.00.000

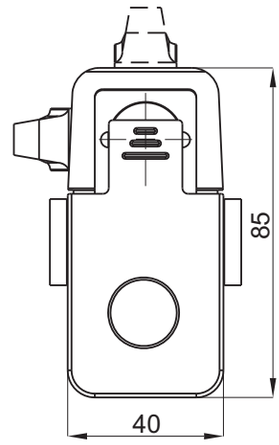

2.613.11.000

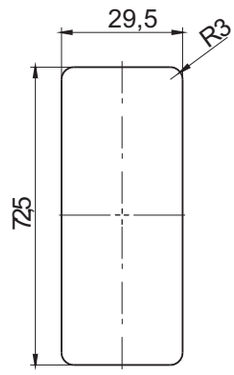

Cut out

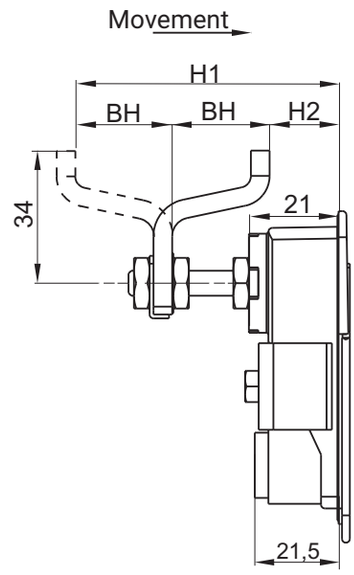

TYPE OF CYLINDER	CATALOGUE NUMBER				THE RANGE OF CAM	
	RAL 9005	04	Chrome	01	H2	H1
Without cylinder	2.613.00.110		2.613.00.130		6-16	56-66
	2.613.00.210		2.613.00.230		16-26	46-56
	2.613.00.310		2.613.00.330		26-36	56-46
Screwdriver	2.613.11.110		2.613.11.130		6-16	56-66
	2.613.11.210		2.613.11.230		16-26	46-56
	2.613.11.310		2.613.11.330		26-36	56-46

NAME	COMPONENTS	MATERIAL
2.613.00.000	Housing, handle	ZAMAK5
	Cam	Steel zinc plated

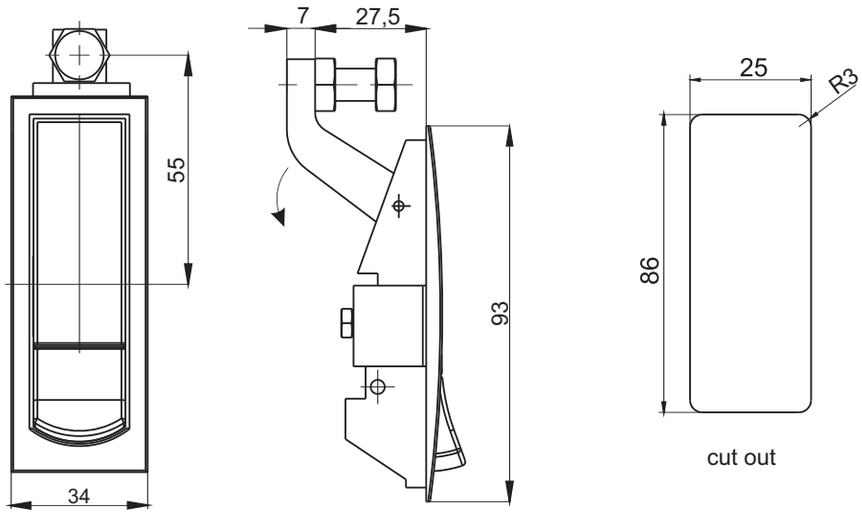

CATALOGUE NUMBER	TYPE OF LOCK	COMPONENTS	MATERIAL	FINISH [C]	
				Chrome	RAL 9005
2.615.146.10	With cylinder	Housing	ZAMAK 5	-	04
2.615.346.10	Without cylinder				
2.615.146.30	With cylinder	Housing	ZAMAK 5	01	-
2.615.346.30	Without cylinder				

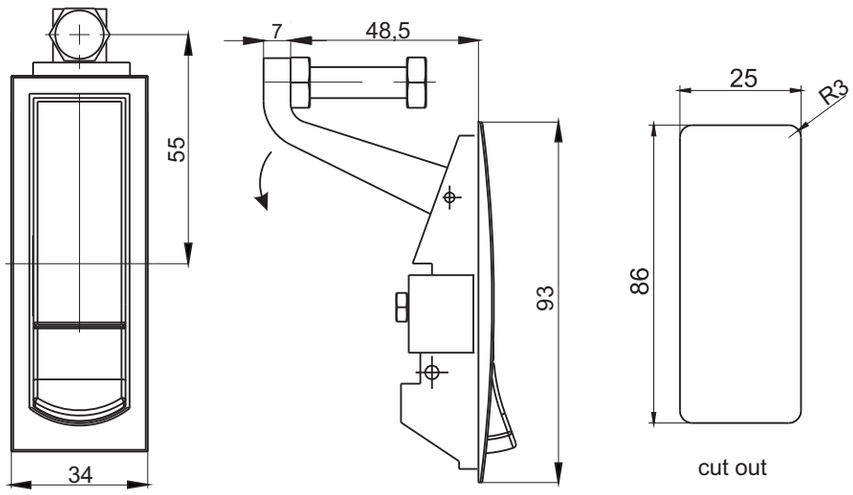

CATALOGUE NUMBER	TYPE OF LOCK	COMPONENTS	MATERIAL	FINISH [C]	
				Chrome	RAL 9005
2.615.124.10	With cylinder	Housing	ZAMAK 5	-	04
2.615.324.10	Without cylinder				
2.615.124.30	With cylinder	Housing	ZAMAK 5	01	-
2.615.324.30	Without cylinder				

Lock 2.601

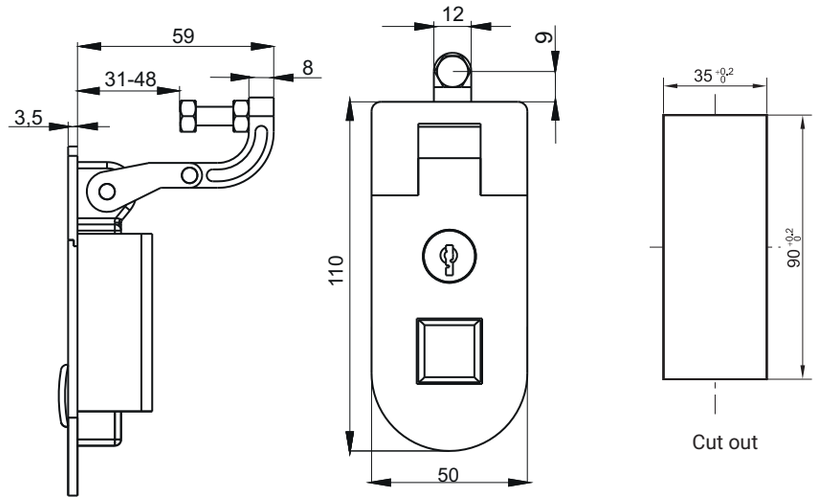

TYPE OF LOCK	COMPONENTS	MATERIAL	FINISH [C]
			RAL 9005
2.601.001	Housing, Handle	ZAMAK5	04

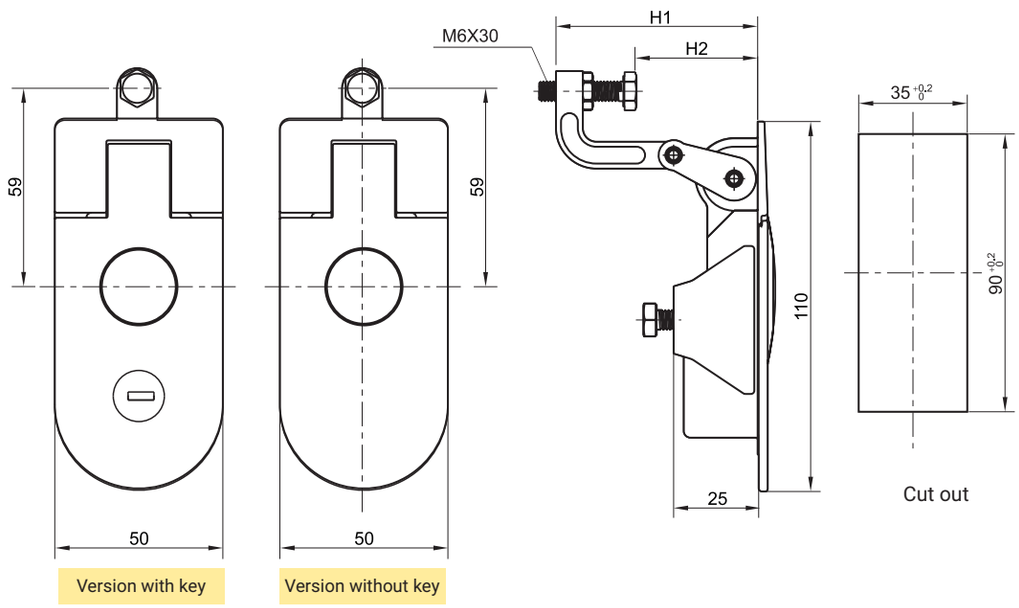

TYPE OF LOCK with key	TYPE OF LOCK without key	DIMENSION		COMPONENTS	MATERIAL	FINISH [C]
		H1	H2			RAL 9005
2.601.101	**2.601.201**	29	0-15	Housing, Handle	ZAMAK5	04
2.601.102	**2.601.202**	60	30-45			
2.601.103	**2.601.203**	43	15-30			
2.601.104	**2.601.204**	75	45-60			

How to order:

2.601.101 — **29** — **04**

Type of lock

Dimension **H1**

Finish **[C]**

Lock 2.509

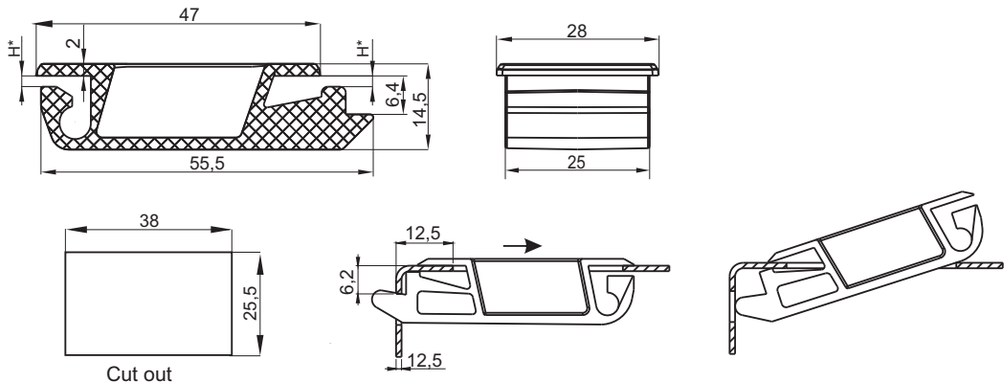

Closing snap :
-5.509.001A dedicated to sheet thickness 1,2 mm-1,6 mm
-5.509.001B dedicated to sheet thickness 1,75 mm-2,2 mm

TYPE OF LOCK	DIMENSION [H]	FINISH & MATERIAL [C]	
		RAL9005 - ABS	RAL7035 - PA6
2.509.001A	1,8	07	08
2.509.001B	2,5		

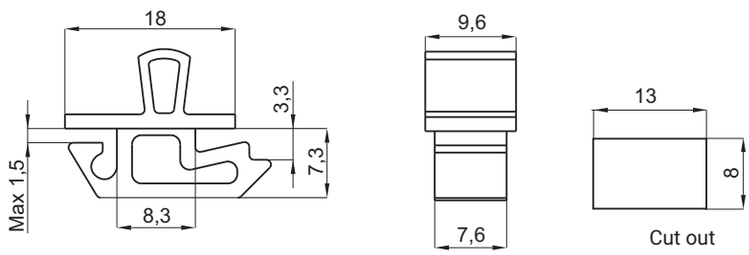

Closing snap:
-5.509.002 dedicated to sheet thickness 1 mm - 1,5 mm

TYPE OF LOCK	COMPONENTS	MATERIAL	FINISH [C]	
			RAL9005	RAL7035
2.509.002	Housing	Polyamide	07	08

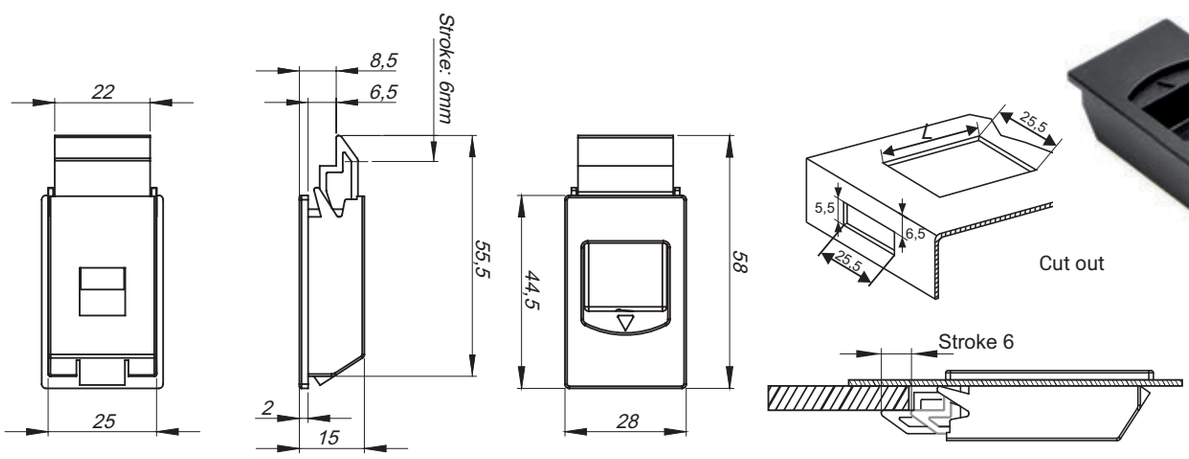

For sheets: 0.8 - 1.6 mm ***L= 37.3 + 0.9 mm***
For sheets: 1.7 - 2.0 mm ***L = 38.7 + 0.2 mm***

TYPE OF LOCK	COMPONENTS	MATERIAL	FINISH [C]	
			RAL9005	RAL7035
2.509.003	Housing, sliding portion	Polyamide	07	08

How to order :

2.509.001A — C

Type of lock

Finish

Lock 2.516

ROZTOCZE

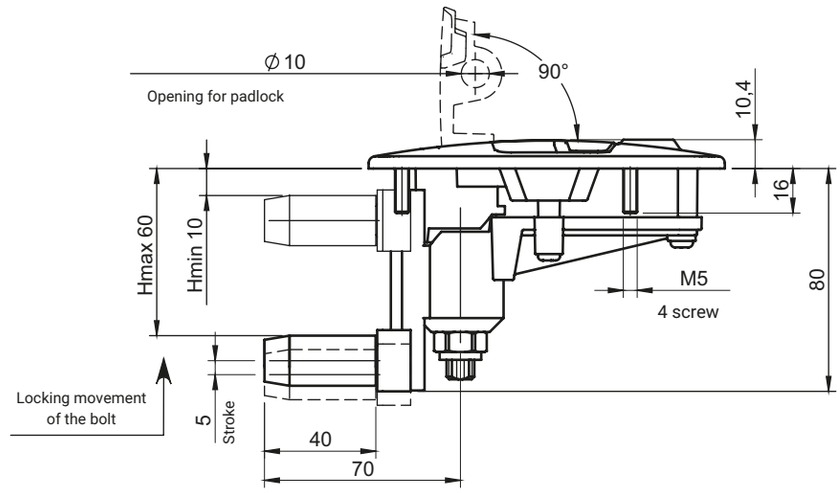

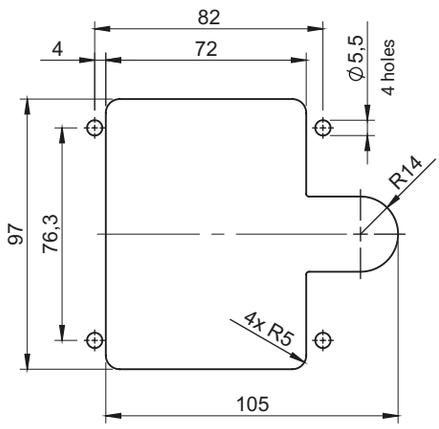

Cut out

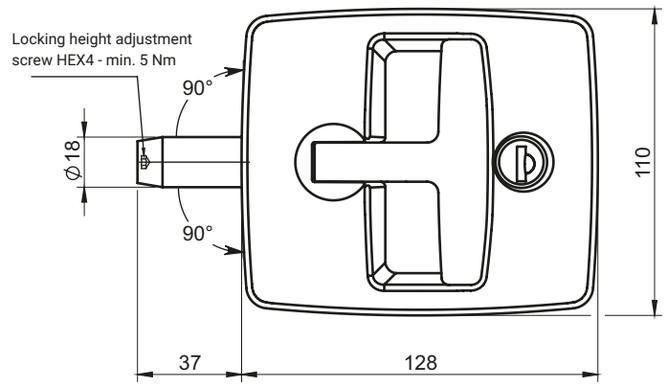

Sealing of lockable doors by folding the lock handle into the lock body.
The locking height (dimension H) is adjustable from 10 to 60 mm.
Locking height is adjusted when the lock is installed and locked with the HEX 4 key
- Recommended tightening torque for the adjusting screw: 5 Nm.

TYPE OF LOCK	COMPONENTS	MATERIAL	FINISH [C]		CYLINDER PROFILE	
			Chrome	RAL9005	Key code	
2.516.001	Housing, Lever Roller	Polyamide PA6 GF	-	07	Different code RK	1333
	Handle	ZAMAK	01	04		
	Bolt, Lever Bushing	ZAMAK	-			

INSERTS				FINISH [C]	
D5	T9	KW 8	S	Chrome	RAL9005*
				01	04

How to order:

2.516.001 — KW8.C — 07 — 04

Catalogue no.

Key code / Type of insert .[C]
where: C - type of insert surface finish

Housing finish [C]

Handle finish [C]

* other colours on request

NEW

IP65

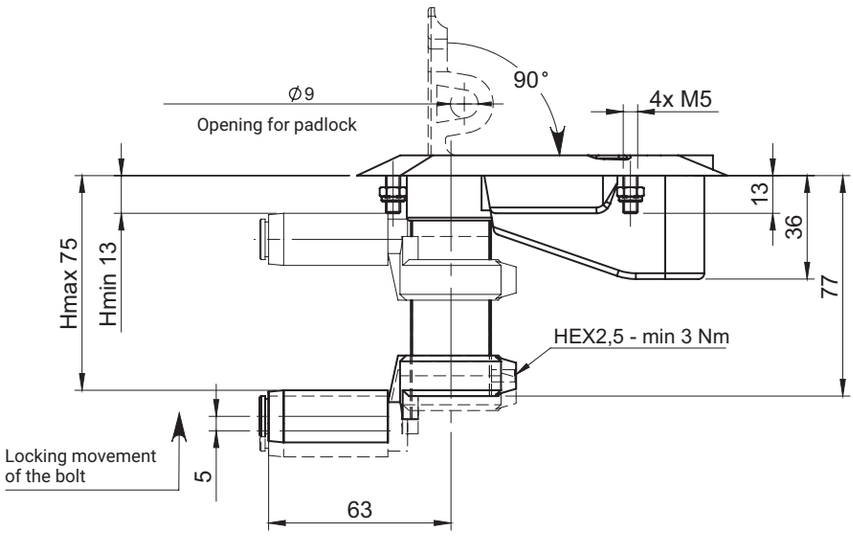

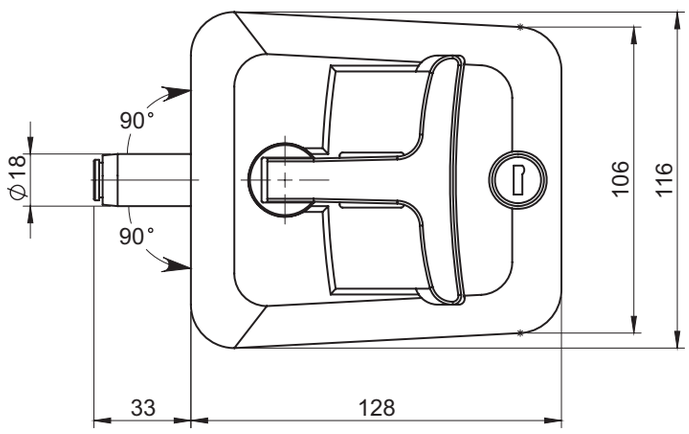

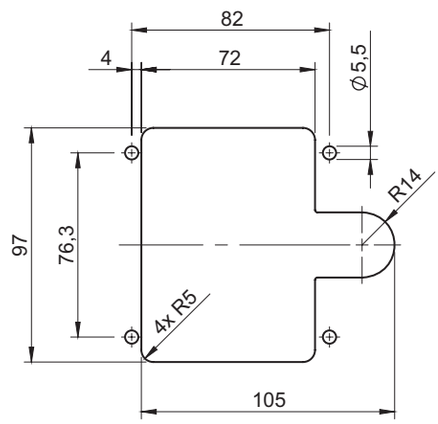

Cut out

Sealing of the closed door through the axial rotation of the bushing along with the bolt, and fixing the lock in the closed position occurs when the lock handle is folded into its body.
The position of the bolt (dimension H) is adjustable in the range from 13 to 75 mm.
The position of the bolt on the bolt bushing is determined during assembly and then fixed with a 2.5 mm HEX key - the minimum recommended tightening torque is 3 Nm.
The lock handle is available in two colors: black (RAL 9005) and grey (RAL 7035).

TYPE OF LOCK	COMPONENTS	MATERIAL	FINISH [C]	
			RAL9005	RAL7035
2.515.001	Housing, Lever Roller	Polyamide PA6 GF	07	-
	Handle	ZAMAK	04	05
	Bolt, Lever Bushing	ZAMAK	-	

How to order:

2.515.001 — **07** — **04**

Catalogue no.
Housing finish
Handle finish

Lock 2.511

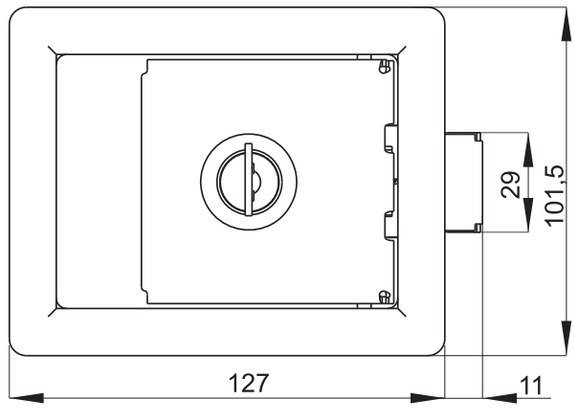

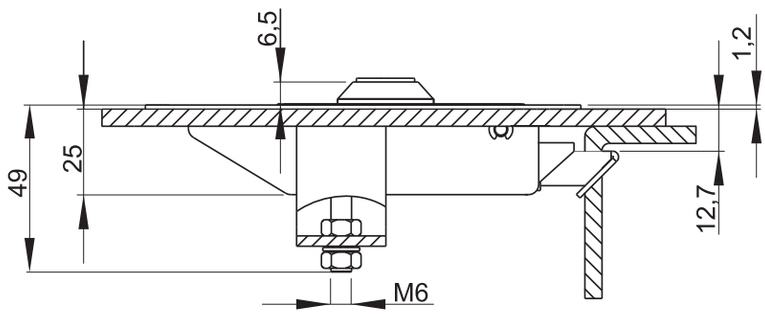

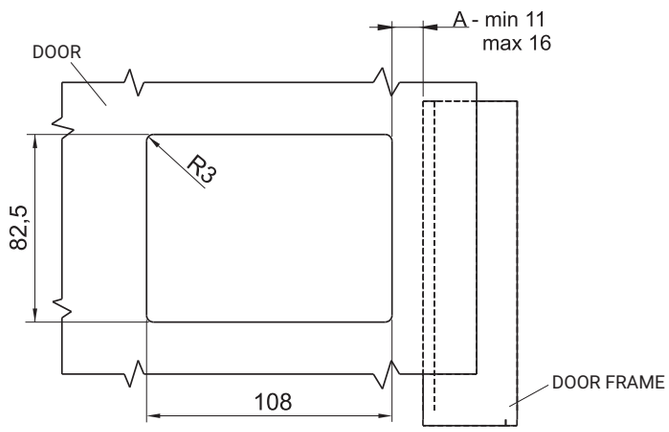

Cut out

TYPE OF LOCK	COMPONENTS	MATERIAL	FINISH [C]
			RAL 9005
2.511.001	Housing	Steel zinc plated	04
	Gasket	Elastomer	
2.511.001SN	Housing	Stainless steel	-
	Gasket	Elastomer	

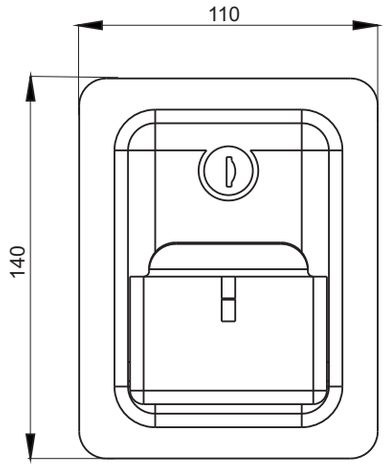

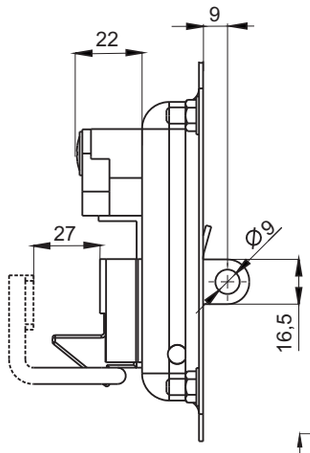

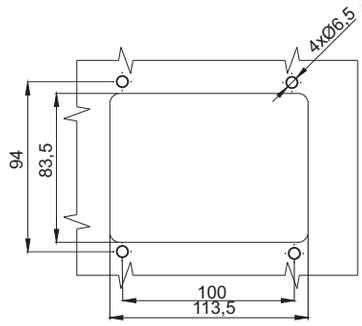

Cut out

TYPE OF LOCK	COMPONENTS	MATERIAL	FINISH [C]
			RAL 9005
2.610.001	Housing	Steel zinc plated	04
	Gasket	Elastomer	

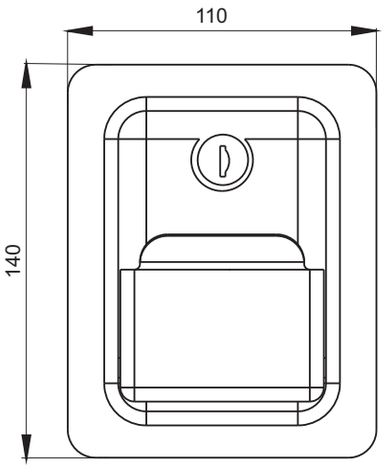

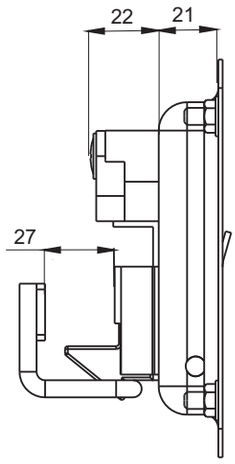

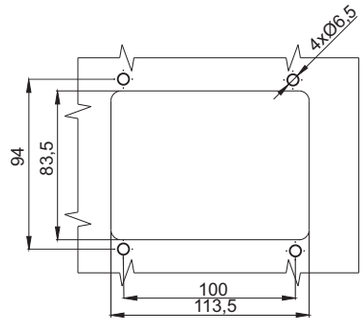

Cut out

TYPE OF LOCK	COMPONENTS	MATERIAL	FINISH [C]
			RAL 9005
2.610.002	Housing	Stainless steel	04
	Gasket	Elastomer	

Lock 2.510

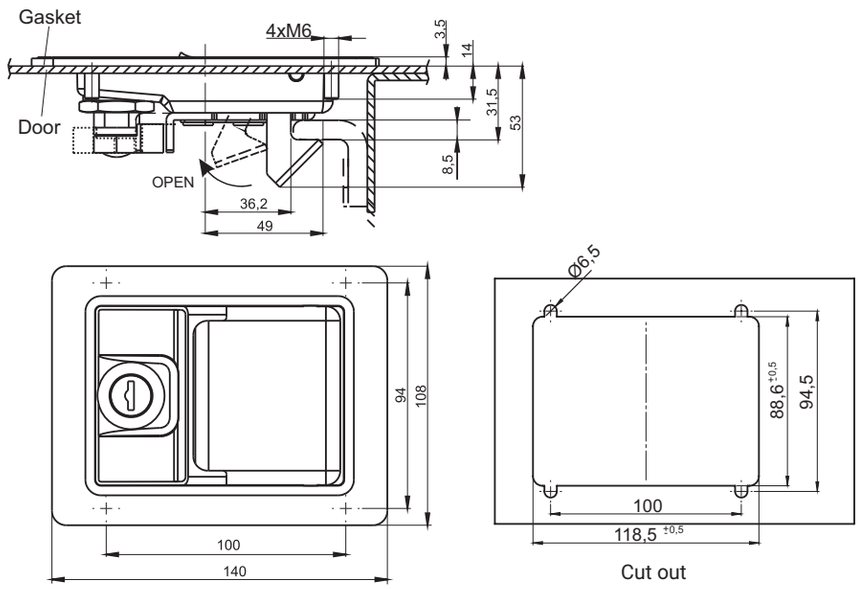

TYPE OF LOCK	COMPONENTS	MATERIAL	FINISH [C]
			RAL 9005
2.510.001	Housing	Steel zinc plated	04
	Gasket	Elastomer	

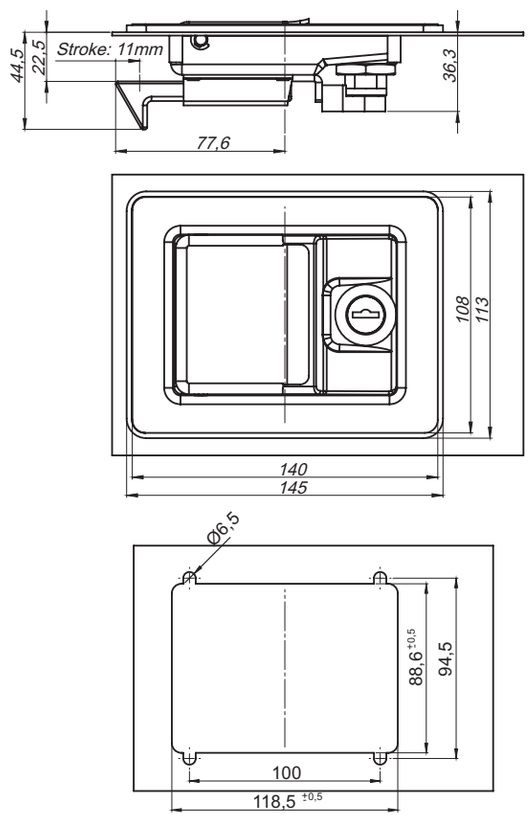

TYPE OF LOCK	COMPONENTS	MATERIAL	FINISH [C]
			RAL 9005
2.510.003	Housing	Steel zinc plated	04
	Gasket	Elastomer	

Lock 2.510

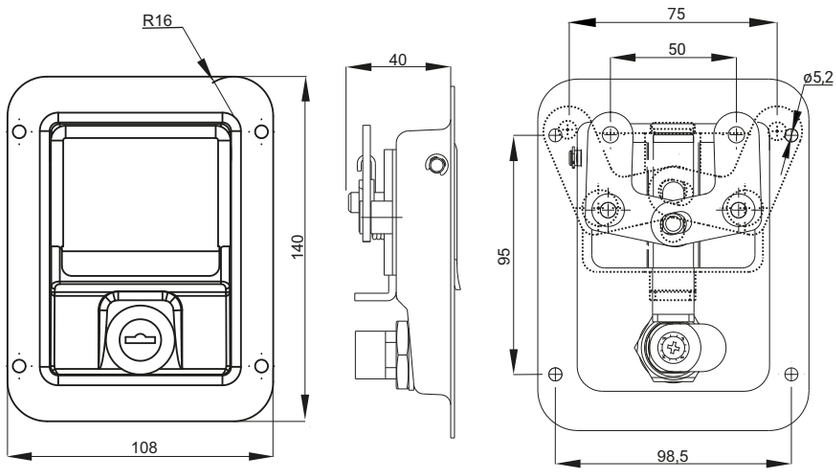

TYPE OF LOCK	COMPONENTS	MATERIAL	FINISH [C]
			RAL 9005
2.510.002	Housing	Stainless steel	04
	Gasket	Elastomer	

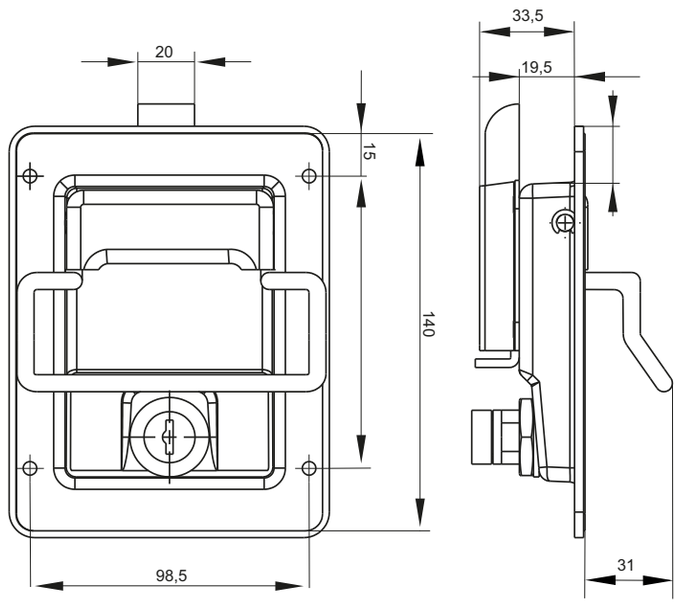

TYPE OF LOCK	COMPONENTS	MATERIAL	FINISH [C]
			RAL 9005
2.510.005	Housing	Stainless steel	04
	Gasket	Elastomer	

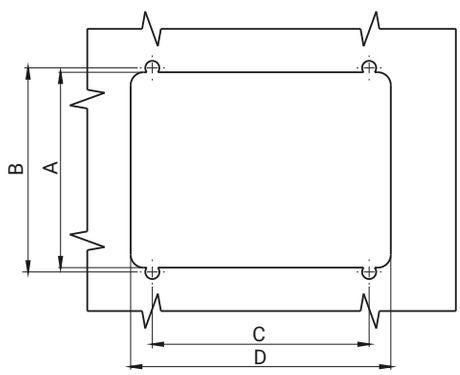

Cut out

	Dimension [mm]			
NR	A	B	C	D
2.510.002	90	95	98	120
2.510.005	80	98,5	103	113,5

Lock 2.504

stainless steel

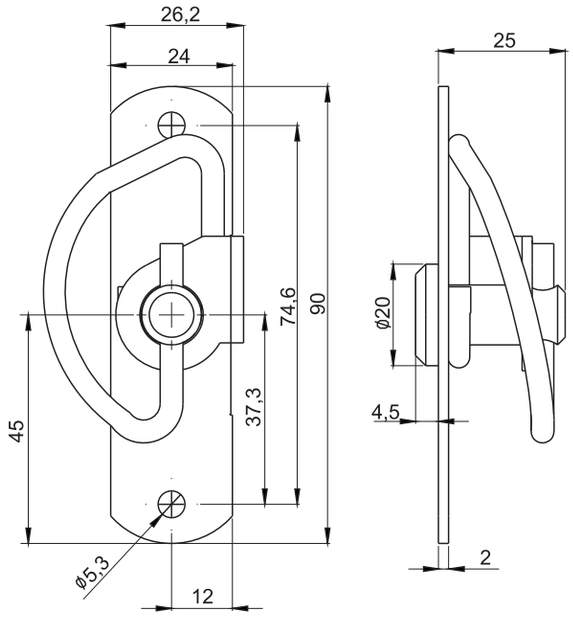

Inserts				
KW8	KW8 inner	T9	S	HEX6

TYPE OF LOCK	COMPONENTS	MATERIAL
2.504.001	Housing, insert	Stainless steel
	Spring	

stainless steel

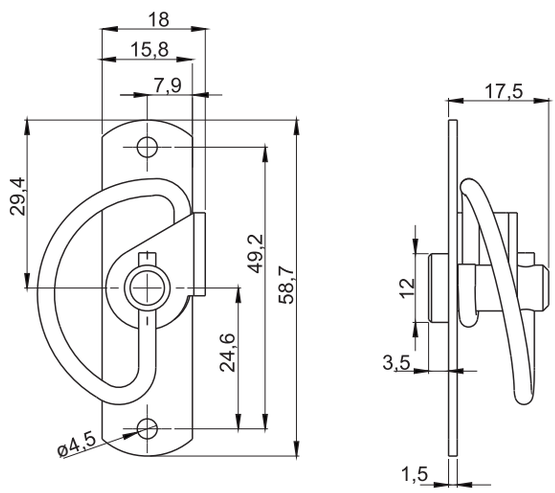

TYPE OF LOCK	COMPONENTS	MATERIAL
2.504.002	Housing, insert	Stainless steel
	Spring	

How to order :

Type of lock — 2.504.001

Type of insert — KW8

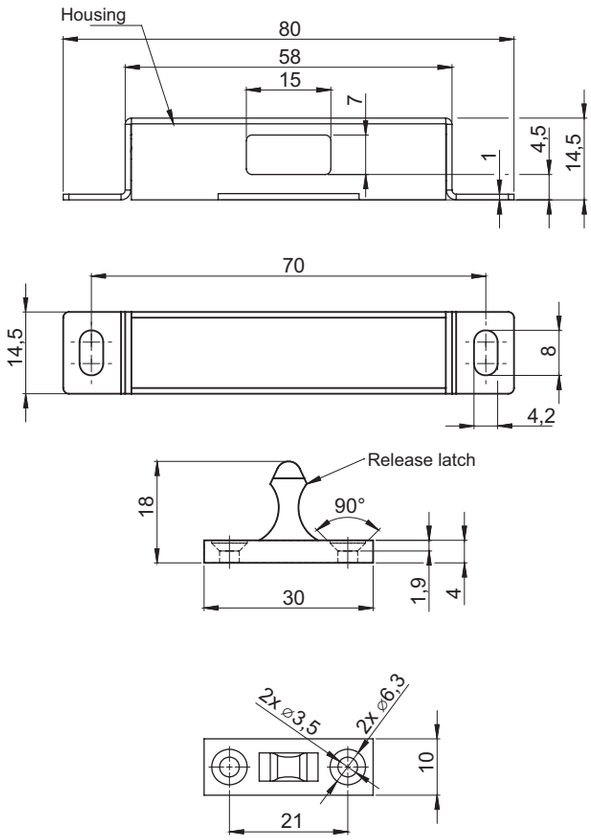

TYPE OF LOCK	DETAIL	COMPONENTS	MATERIAL
2.200.001	Roller latch	Housing	Zinc plated steel
		Release latch	POM

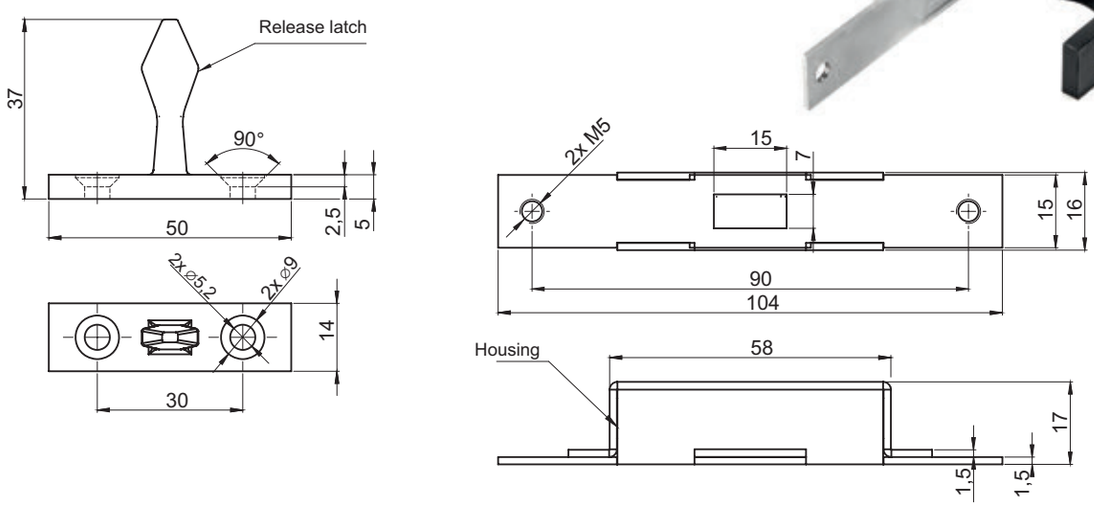

TYPE OF LOCK	DETAIL	COMPONENTS	MATERIAL
2.210.001SN	Roller latch	Housing	Stainless steel
		Release latch	POM

Lock 2.521, 2.505

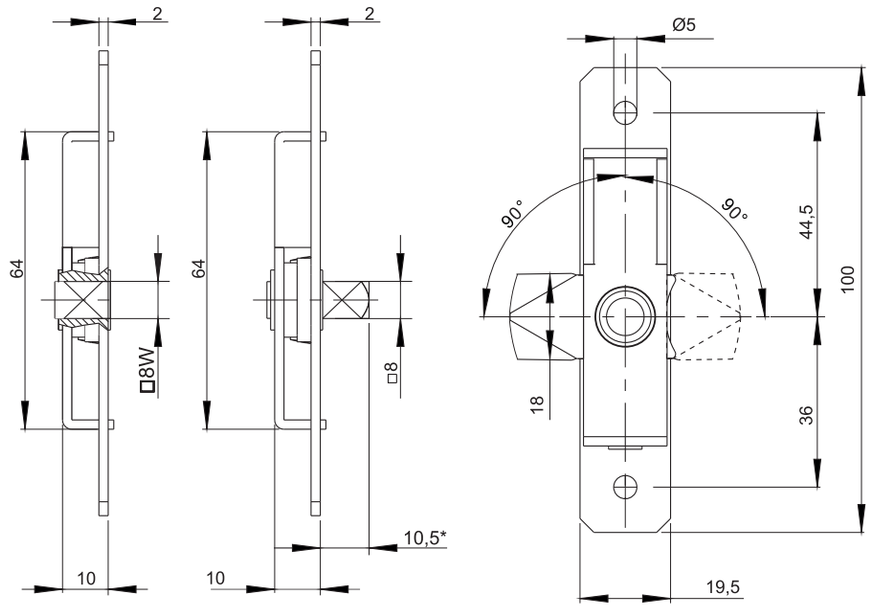

2.521.004 2.521.001

CATALOGUE NUMBER	COMPONENTS	MATERIAL
2.521.001	Housing, Insert, Cam	Steel zinc plated
2.521.004	Housing, Insert, Cam	Stainless steel

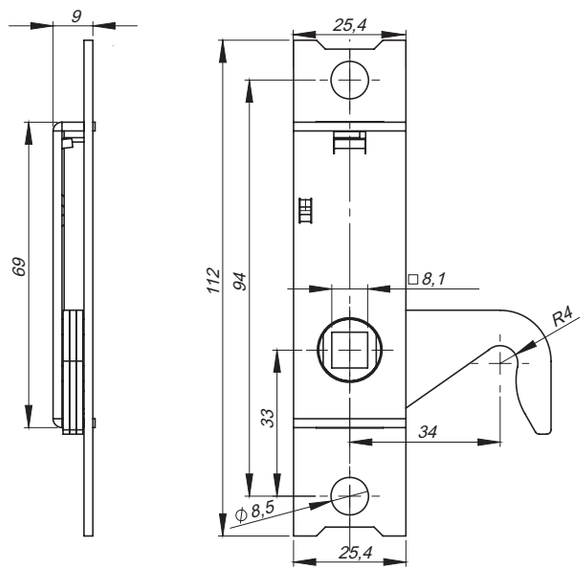

CATALOGUE NUMBER	COMPONENTS	MATERIAL
2.505.001	The base of the cam	Steel zinc plated
	The hook cam	Steel zinc plated
	The spring of the lock	Stainless steel

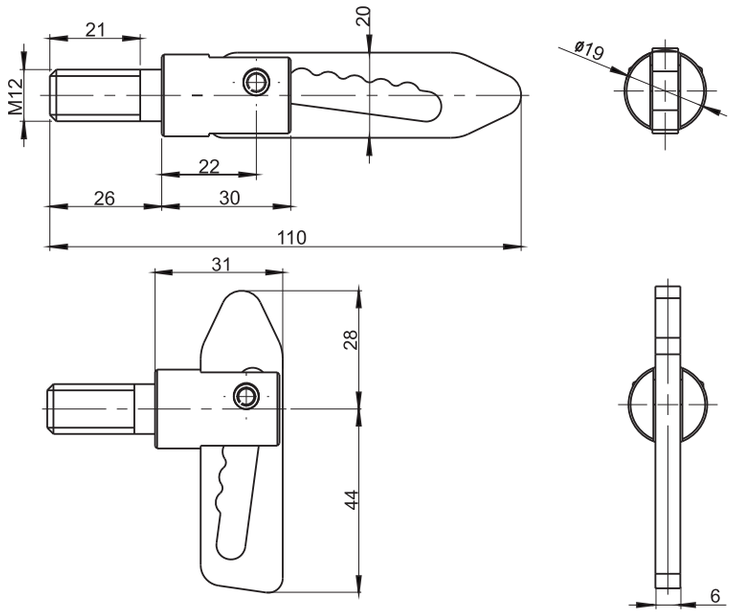

TYPE OF LOCK	COMPONENTS	MATERIAL
2.503.002	Insert, holdfast	Steel zinc plated
2.503.002SN	Insert, holdfast	Stainless steel

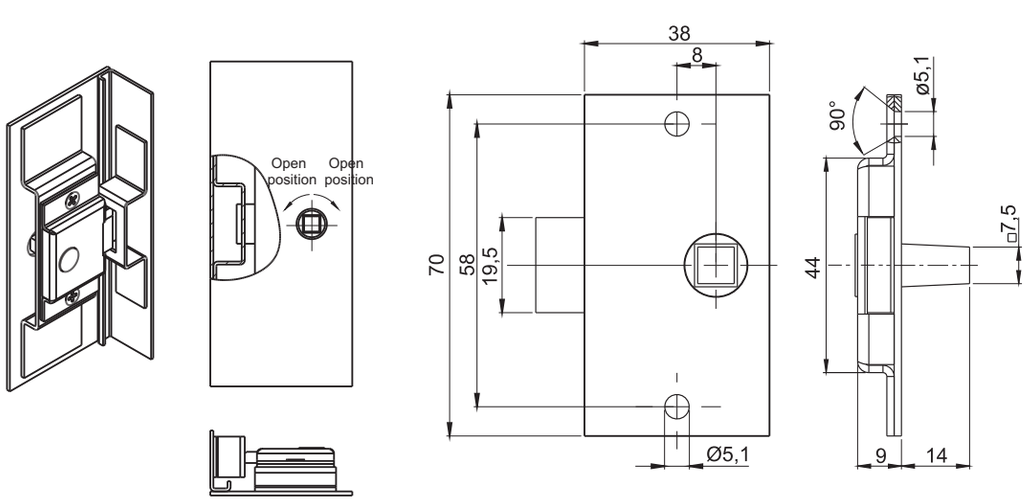

INSERT		
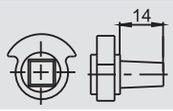	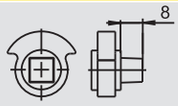	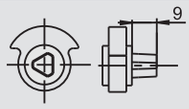
KW8-14	KW8-8	T8-9

TYPE OF LOCK	COMPONENTS	MATERIAL
2.520.001SN	Housing, insert Cam	Stainless steel

How to order :

2.520 — T8 — 9

Type of lock or catalogue number

Type of insert

Height cam H

Lock 2.501

stainless steel

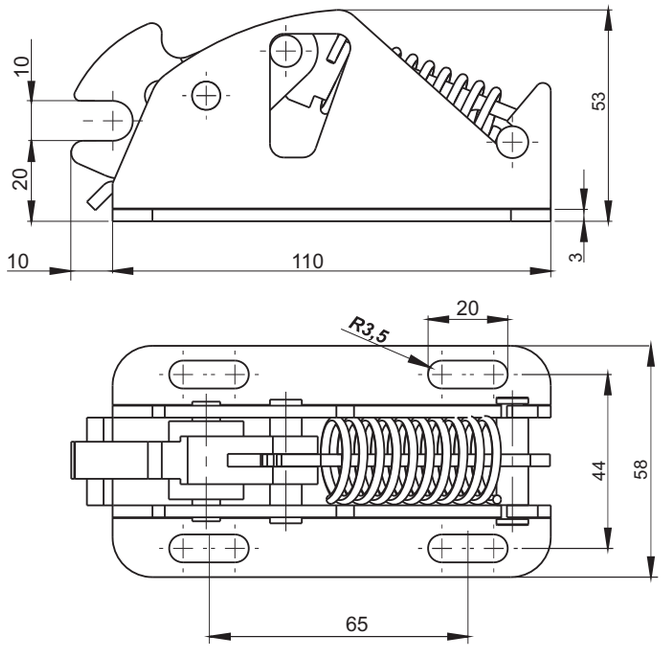

TYPE OF LOCK	COMPONENTS	MATERIAL
2.501.001	Housing / cam	Steel zinc plated/ Polyamide
2.501.001SN	Housing / cam	Stainless steel/ Polyamide

stainless steel

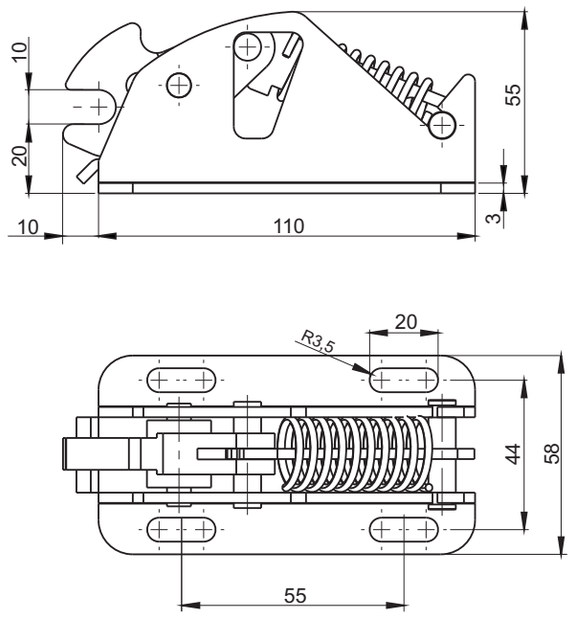

TYPE OF LOCK	COMPONENTS	MATERIAL
2.501.003	Housing / cam	Steel zinc plated/ Polyamide
2.501.003SN	Housing / cam	Stainless steel/ Polyamide

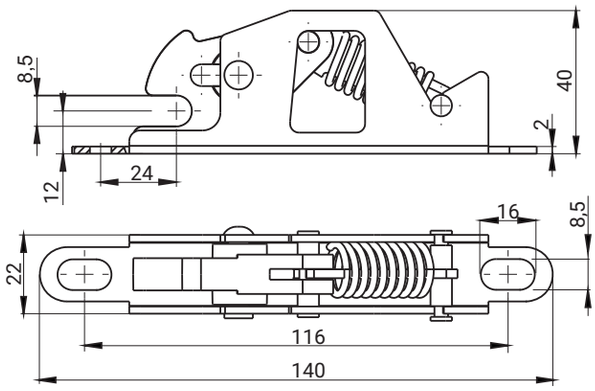

TYPE OF LOCK	COMPONENTS	MATERIAL
2.512.001	Housing / Cam	Steel zinc plated / Polyamide
2.512.001SN	Housing / Cam	Stainless Steel / Polyamide

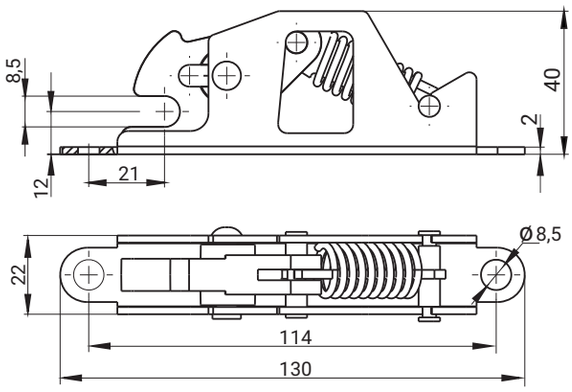

TYPE OF LOCK	COMPONENTS	MATERIAL
2.512.002	Housing / Cam	Steel zinc plated / Polyamide
2.512.002SN	Housing / Cam	Stainless Steel / Polyamide

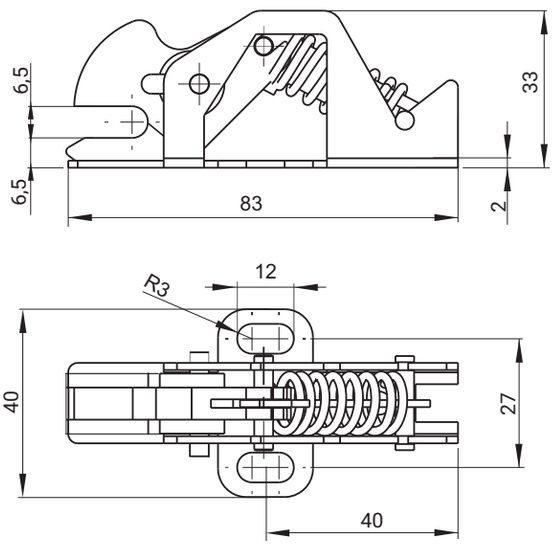

TYPE OF LOCK	COMPONENTS	MATERIAL
2.502.001	Housing / Cam	Steel zinc plated / Polyamide
2.502.001SN	Housing / Cam	Stainless Steel / Polyamide

Lock 2.507

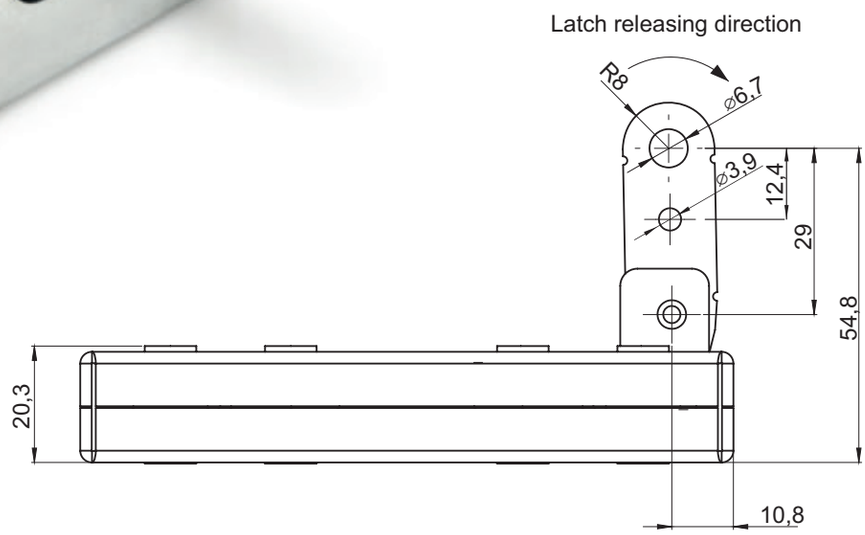

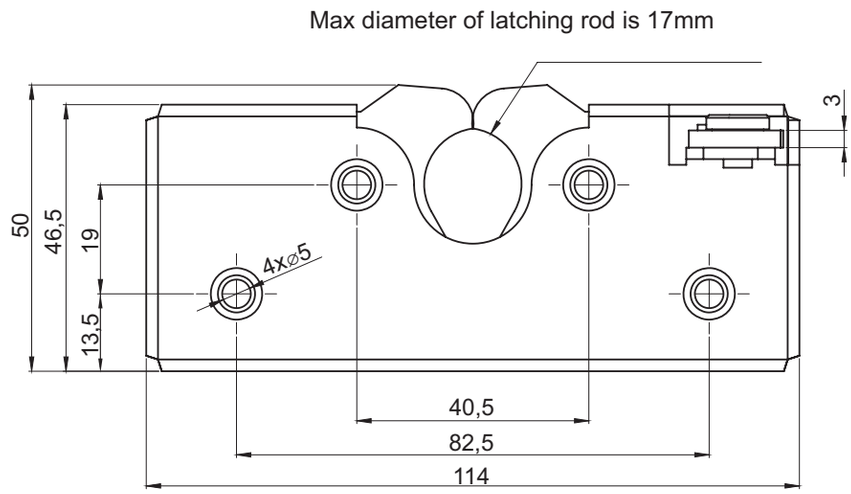

TYPE OF LOCK	COMPONENTS	MATERIAL
2.507.001	Housing	Zinc plated steel
	Bolt	Oxidized steel

stainless steel

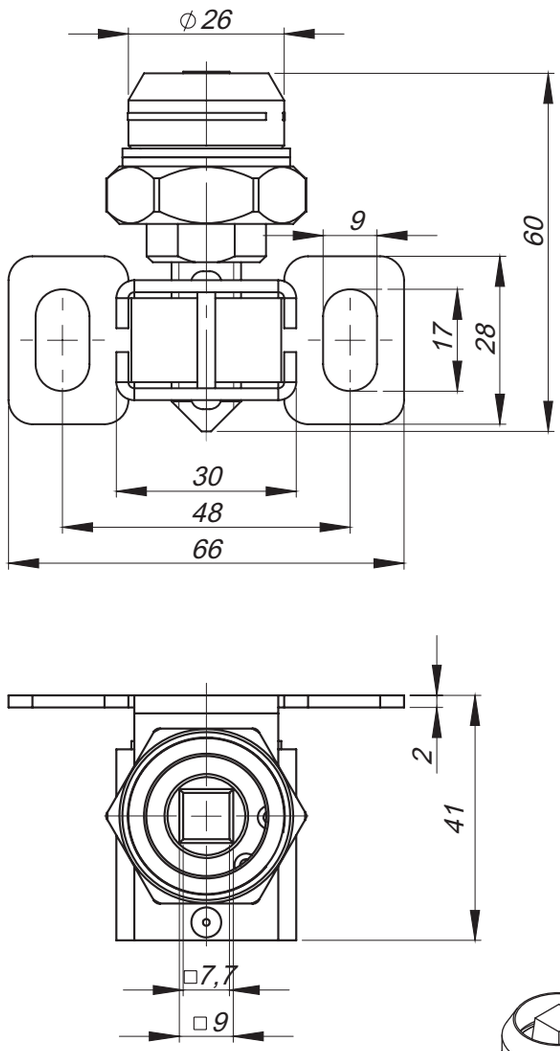

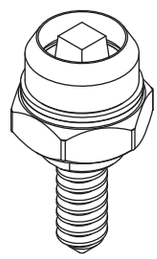

Locking flap

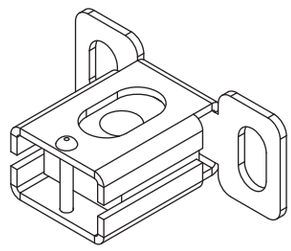

Locking flap handle

TYPE OF LOCK	COMPONENTS	MATERIAL
2.700.001	Locking flap	Stainless steel AISI 316L
	Locking flap handle	Stainless steel AISI 304

Lock TR12

stainless steel

NEW

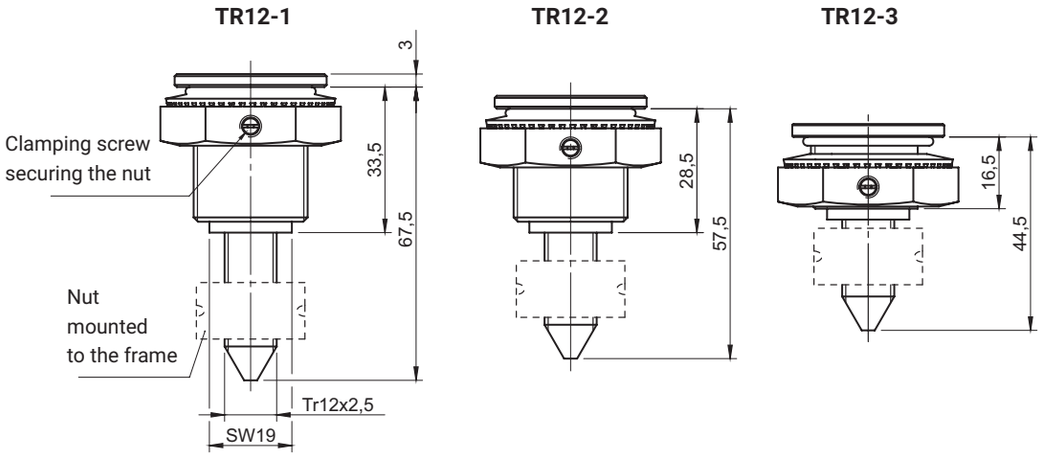

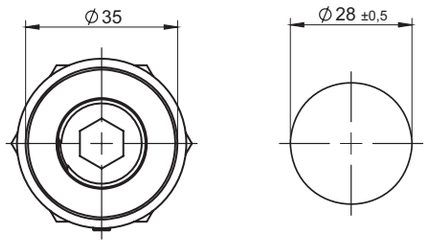

Cut out

Nut TR12x2,5

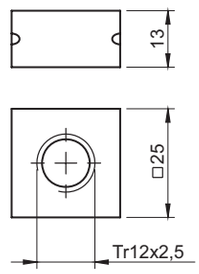

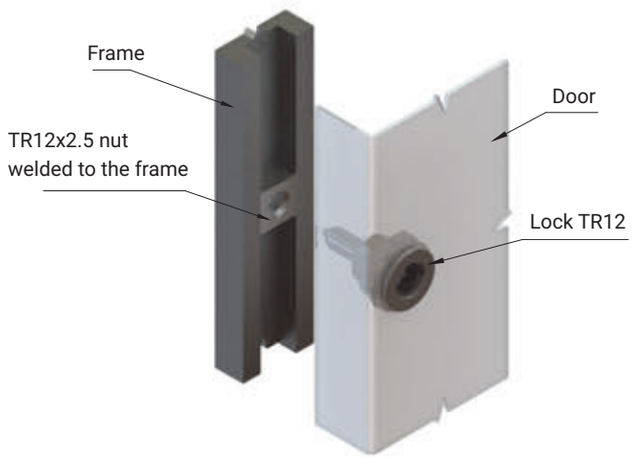

CATALOGUE NUMBER	INSERTS [D]			COMPONENTS	MATERIAL
TR12-1 TR12-2 TR12-3	KW8-4	HEX10	KW9-7	Housing, Insert	Stainless steel
TR12x2,5	-			Nut	Stainless steel

How to order:

TR12-1 — HEX10

Catalogue number

Type of insert

Nut TR12x2,5 to be ordered separately

Cover **2.904.005**

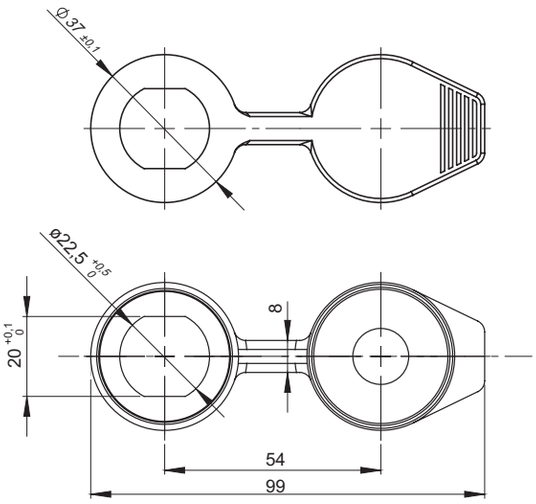

Cover **2.904.006**

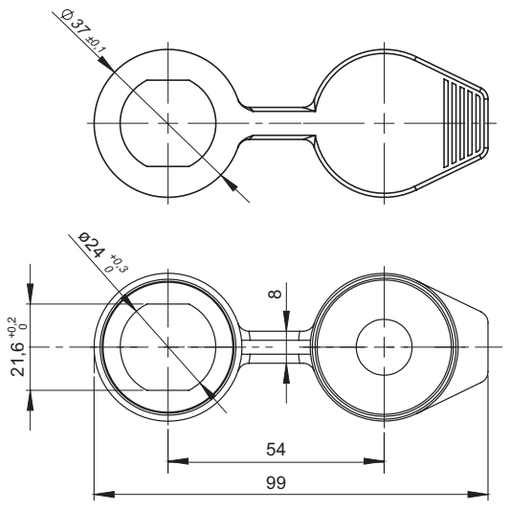

Cover **2.904.007**

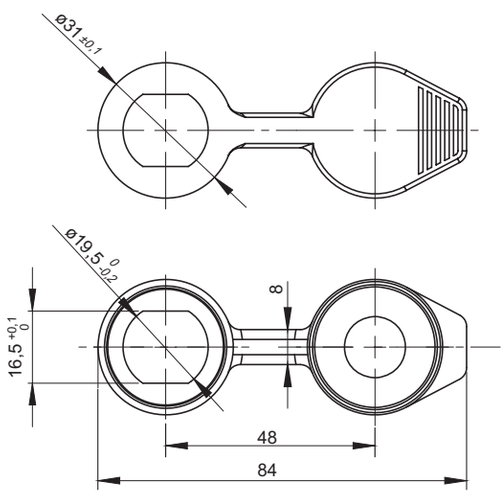

Cover **2.904.008**

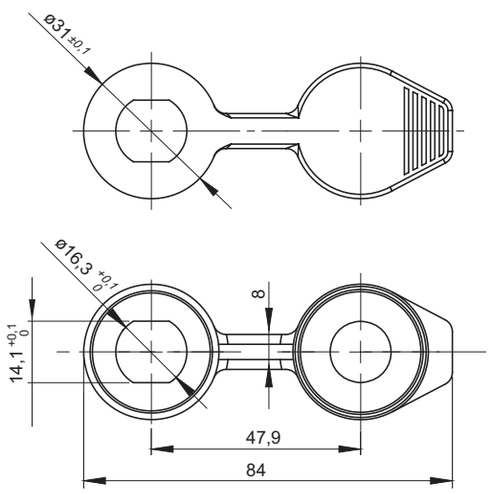

Attention:
In case of adjusting the handle the H dimension reduces of **2mm**

CATALOGUE NUMBER	TYPE OF LOCK	MATERIAL	FINISH [C]
			RAL9005
2.904.005	M22	TPE	07
2.904.006	M24		
2.904.007	M19W		
2.904.008	M16		

* colour 7035 available on special request

Handle for lock 2.905

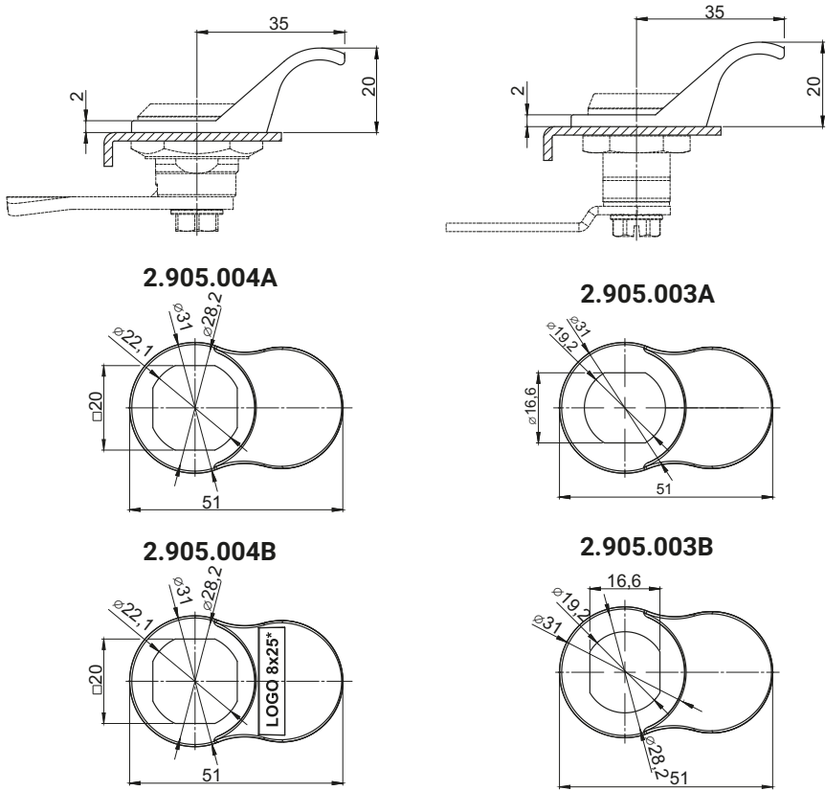

CATALOGUE NO.	DETAIL	MATERIAL	FINISH [C]	
			RAL 9005	RAL 7035
2.905.004A	Handle for lock M22	Polyamide PA6 GF30	07	08
2.905.004B				
2.905.003A	Handle for lock M19	Polyamide PA6 GF30	07	08
2.905.003B				

How to order : 2.905.003A — C

Catalogue no.

Finish

* Optional logo on the handle 2.905.004B with dimension 8x25 mm.
Handle for lock 2.905.004 is fiited with all locks M22 with the outside diameter of flanged housing ø28.
2.905.003 and 2.905.013 are fitted with locks M19W, M19DC, Z-2106, 2.612.001.

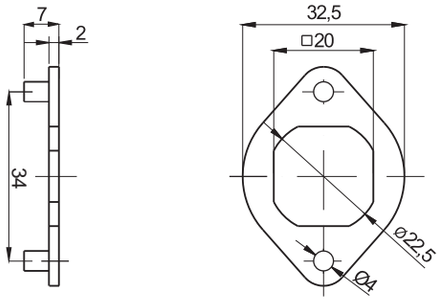

CATALOGUE NUMBER	COMPONENTS	MATERIAL
2.907.002	Locking washer	Steel zinc plated
2.907.002SN	Locking washer	Stainless steel

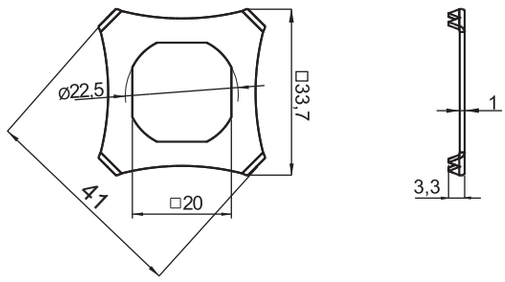

CATALOGUE NUMBER	COMPONENTS	MATERIAL
2.911.001	Locking washer	Steel zinc plated
2.911.001SN	Locking washer	Stainless steel

Blockade 2.902, 2.904, 2.905

stainless steel

Blockade ST2

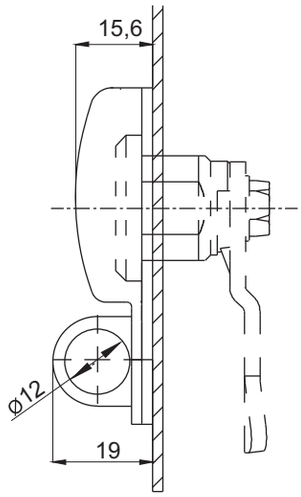

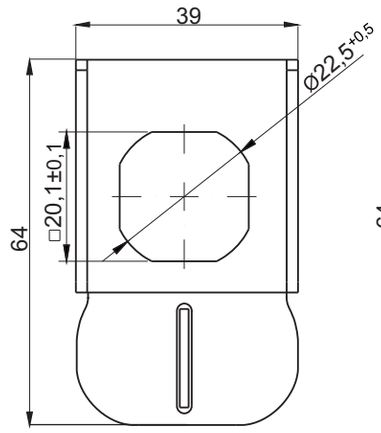

Blockade 2.902.001

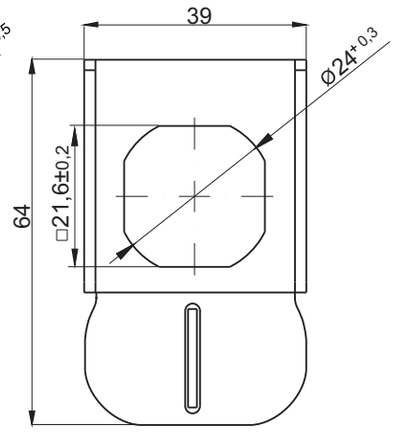

Blockade 2.902.002

CATALOGUE NUMBER	TYPE OF LOCK	COMPONENTS	MATERIAL
2.902.001	**M22**	Rate, flape	Steel zinc plated
2.902.001SN	**M22**	Rate, flape	Stainless steel
2.902.002	**M24**	Rate, flape	Steel zinc plated
2.902.002SN	**M24**	Rate, flape	Stainless steel

stainless steel

Blockade ST2.02

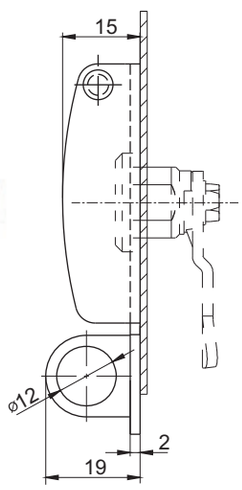

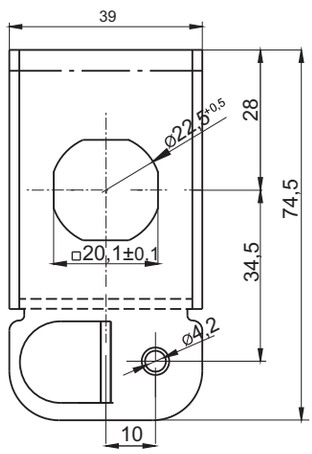

Blockade 2.904.101

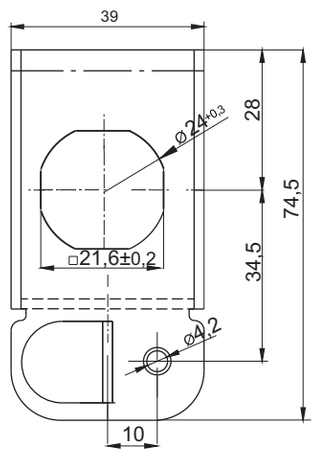

Blockade 2.905.102

CATALOGUE NUMBER	TYPE OF LOCK	COMPONENTS	MATERIAL
2.904.101	**M22**	Rate, flape	Steel zinc plated
2.904.101SN	**M22**	Rate, flape	Stainless steel
2.905.102	**M24**	Rate, flape	Steel zinc plated
2.905.102SN	**M24**	Rate, flape	Stainless steel

Blockade ST1

stainless steel

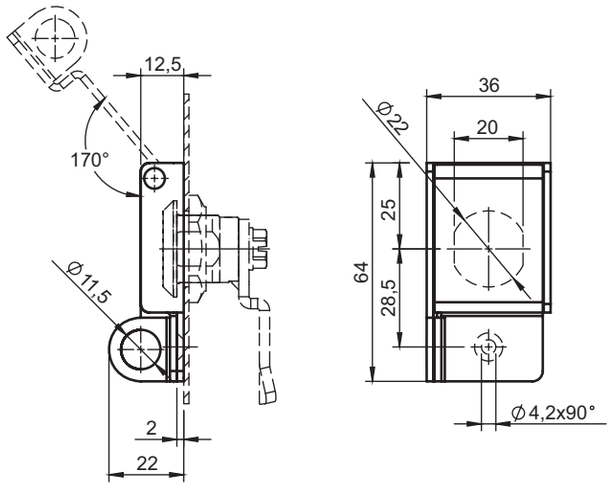

CATALOGUE NUMBER	COMPONENTS	MATERIAL
2.901.001	Rate, flap	Steel zinc plated
2.901.001SN	Rate, flap	Stainless steel

Blockade ST1

stainless steel

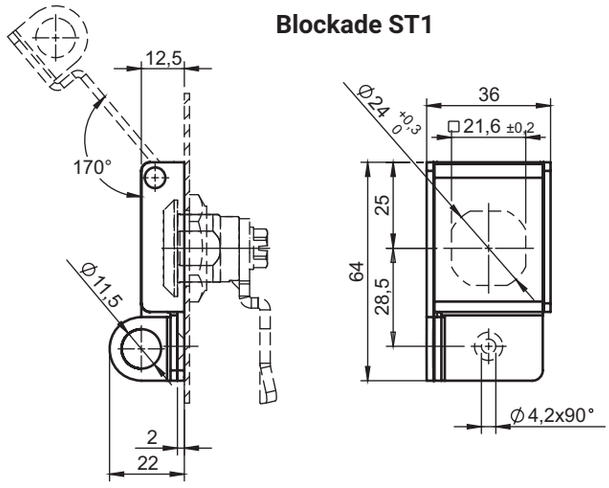

CATALOGUE NUMBER	COMPONENTS	MATERIAL
2.901.002	Rate, flap	Steel zinc plated
2.901.002SN	Rate, flap	Stainless steel

stainless steel

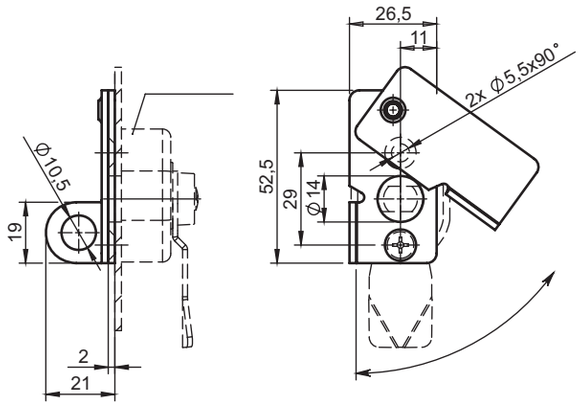

CATALOGUE NUMBER	COMPONENTS	MATERIAL
2.903.001	Rate, flap	Steel zinc plated
2.903.001SN	Rate, flap	Stainless steel
2.903.001AL	Rate, flap	Aluminum

Blockade 2.910

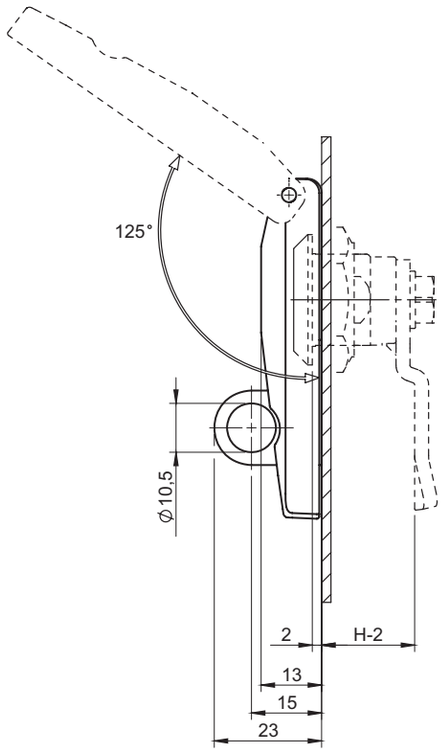

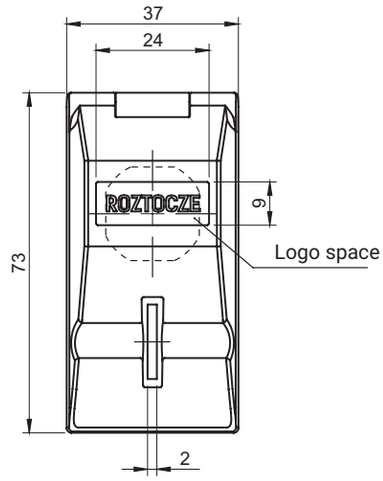

* Customized logo available.

CATALOGUE NUMBER	TYPE OF LOCK	COMPONENTS	MATERIAL
2.910.001	M22	Base Lock cover	Steel zinc plated ZAMAK
2.910.002	M24		

FINISH [C]	
Nickel	RAL9005
02	04

How to order:

Catalogue number

Finish

2.910.001 — **C**

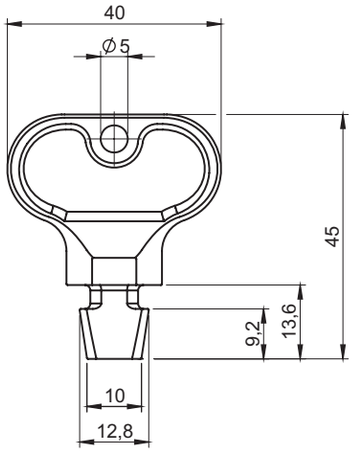

CATALOGUE NUMBER	MATERIAL	FINISH [C]	
		RAL 9005	RAL 7035
2.KLE-GZ.001	Polyamide	07	08

How to order:
Catalogue number, type of key
Finish

2.KLE-GZ.001 — C

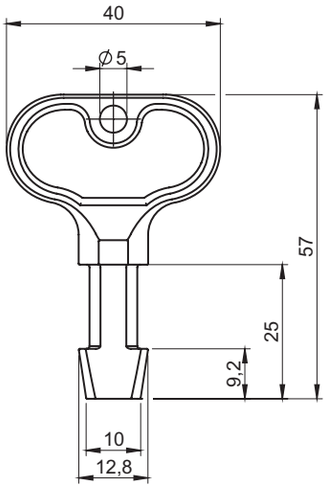

CATALOGUE NUMBER	MATERIAL	FINISH [C]	
		RAL 9005	RAL 7035
2.KLF-GZ.001	Polyamide	07	08

How to order:
Catalogue number, type of key
Finish

2.KLF-GZ.001 — C

Key 2.KLB-X, 2.KLA-X, 2.KLD-T13

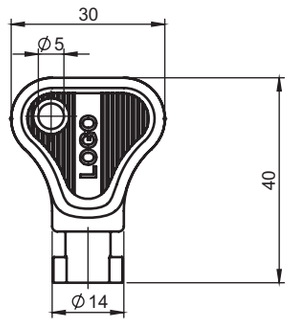

Customized logo on the key available.

CATALOGUE NUMBER	MATERIAL	TYPE OF KEY [X]			FINISH [C]	
2.KLB-X.001	Polyamide				RAL 9005	RAL 7035
		D5	T9	KW 8	07	08

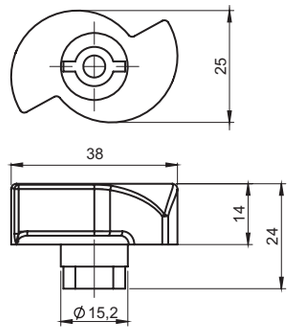

CATALOGUE NUMBER	MATERIAL	TYPE OF KEY [X]				FINISH [C]	
2.KLA-X.001	Polyamide					RAL 9005	RAL 7035
		D5	T9	KW 8	C9	07	08

How to order:

Catalogue number, type o key [X]

Finish

2.KLA-X.001 — C

Wing knob for T13 insert

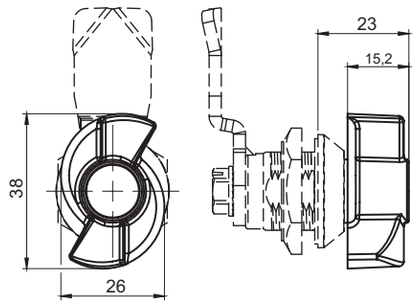

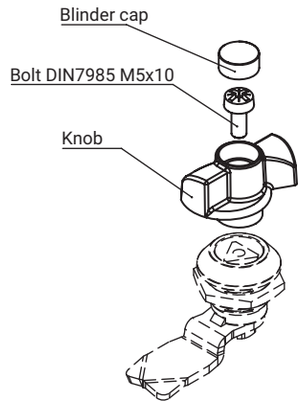

Wing knob for T13 pin, M22-2 and M22-DU locks (pages 2A-9 and 2A-11)

CATALOGUE NUMBER	COMPONENTS	MATERIAL	Finish [C]
			RAL 9005
2.KLD-T13.001	T-handle, Blinder cap	Polyamide	07
	Bolt M5x10	Steel zinc plated	-

How to order:

Catalogue no.

Finish

2.KLD-T13.001 — C

Key 2.KL-X.001, 2.KL-X.002

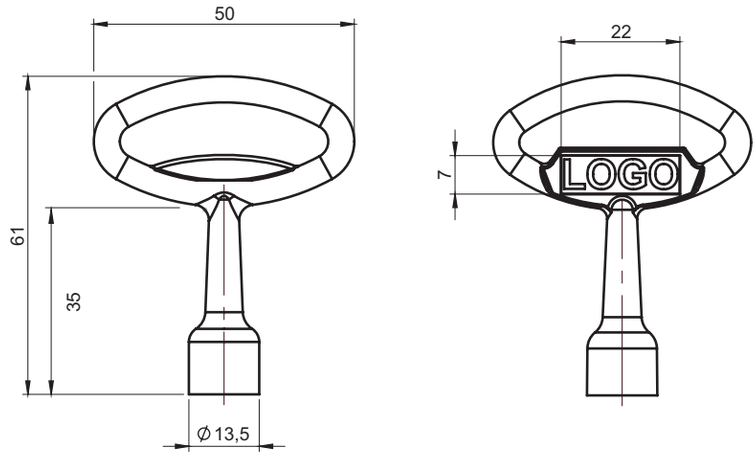

Possibility of making logo key on request.

CATALOGUE NUMBER											MATERIAL			
2.KL-X.001											ZAMAK5			
Type of key [X]											Finish [C]			
											No finish	Chrome	Nickel	RAL 9005
D3	D5	T6	T7	T9	KW6	KW7	KW8	N	C9	Q	00	01	02	04

How to order:

Catalogue number, type o key [X]

Finish

2.KL-X.001 — C

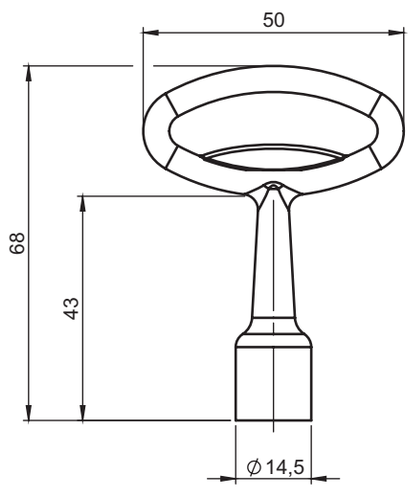

CATALOGUE NUMBER											
2.KL-X.002											
Type of key [X]								Finish [C]			
								No finish	Chrome	Nickel	RAL 9005
T9	T10	KW6	KW7	KW8	KW8 zew	C9	D9	00	01	02	04

How to order:

Catalogue number, type o key [X]

Finish

2.KL-X.002 — C

Key 2.KL-X.003, 2.KL-X.004

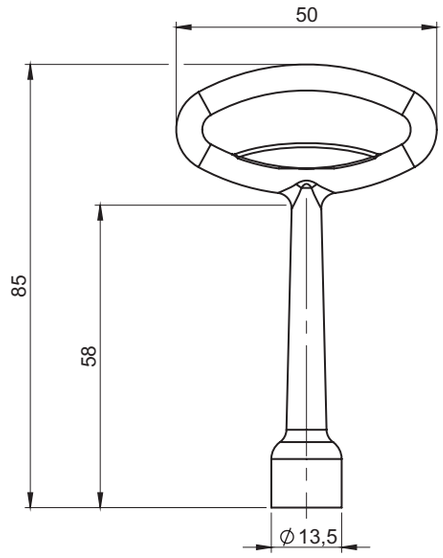

CATALOGUE NUMBER				MATERIAL			
2.KL-X.003				ZAMAK5			
Type of key [X]				Finish [C]			
				No finish	Chrome	Nickel	RAL 9005
D3	D5	T9	KW8	00	01	02	04

How to order:

Catalogue number, type o key [X]

Finish

2.KL-X.003 — C

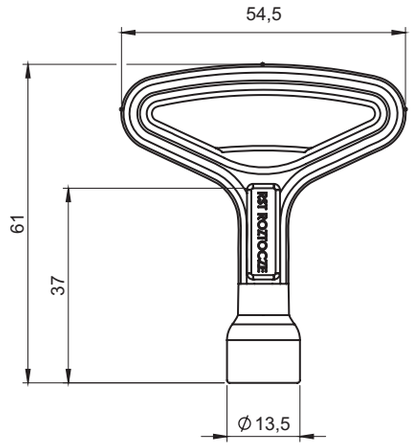

Possibility of making logo key on request.

CATALOGUE NUMBER			MATERIAL			
2.KL-X.004			ZAMAK5			
Type of key [X]			Finish [C]			
			No finish	Chrome	Nickel	RAL 9005
D5	T9	KW8	00	01	02	04

How to order:

Catalogue number, type o key [X]

Finish

2.KL-X.004 — C

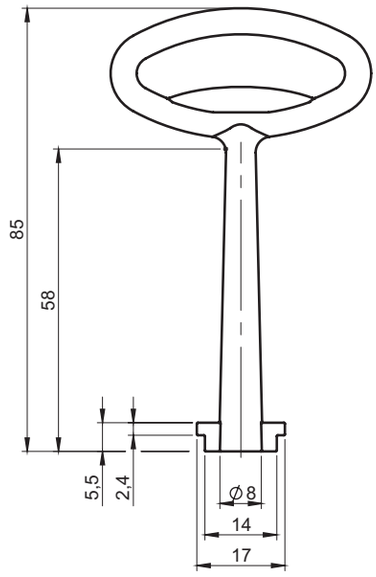

CATALOGUE NUMBER		MATERIAL			
2.KL-X.005		ZAMAK5			
Type of key [X]		Finish [C]			
		No finish	Chrome	Nickel	RAL 9005
D3S	D5S	00	01	02	04

How to order:

Catalogue number, type o key [X]

Finish

2.KL-X.005 — C

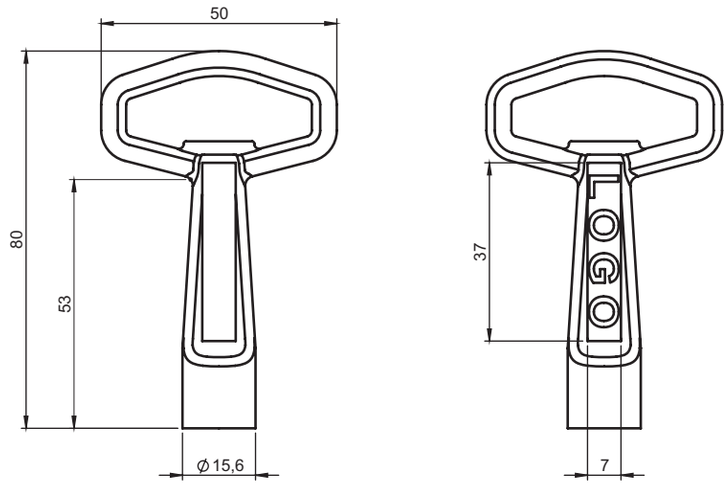

Possibility of making logo key on request.

CATALOGUE NUMBER							MATERIAL			
2.KL-X.006							ZAMAK5			
Type of key [X]							Finish [C]			
							No finish	Chrome	Nickel	RAL 9005
KW8	T9	T10	T11	T12	T13	HEX9	00	01	02	04

How to order:

Catalogue number, type o key [X]

Finish

2.KL-X.006 — C

Key 2.KL-X.007, 2.KL-D13S.008

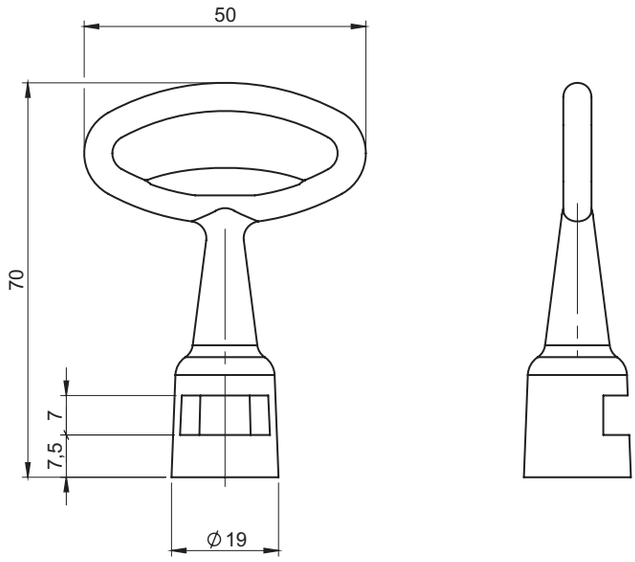

CATALOGUE NUMBER	MATERIAL	Type of key [X]	Finish [C]			
2.KL-X.007	ZAMAK5		No finish	Chrome	Nickel	RAL 9005
		D13S	00	01	02	04

How to order:

Catalogue number, type o key [X]

Finish

2.KL-D13S.007 — C

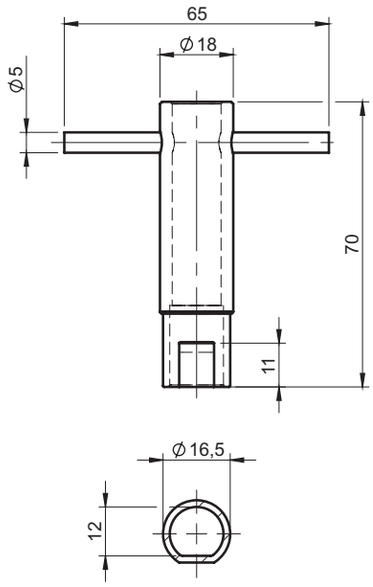

CATALOGUE NUMBER	MATERIAL
2.KL-D13S.008	Steel zinc plated

Key 2.KL.009, KLT-WF

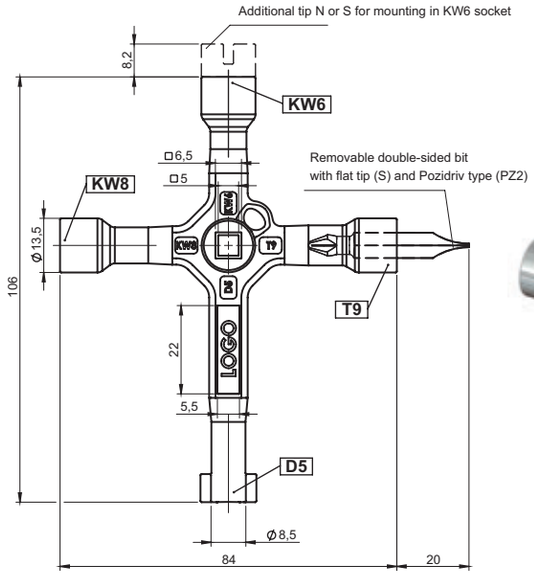

Standard key bits			
D5	T9	KW6	KW8
Additional bit [X]			
N	S		

Removable double-sided bit with flat tip (S) and Pozidriv type (PZ2)
Key supplied with double bit, additional N or S bits ordered separately.

CATALOGUE NUMBER	COMPONENTS	MATERIAL	Finish [C]			
			No finish	Chrome	Nickel	RAL 9005
2.KL.009	Key, additional bits	ZAMAK5				
	Bit S / PZ2	Tool steel	00	01	02	04

How to order :

2.KL.009 — X — C

Catalogue number

Additional bit

When ordering more than one, enter the symbols after the comma.
When ordering a key without an additional bit, omit the following

Finish [C]

stainless steel

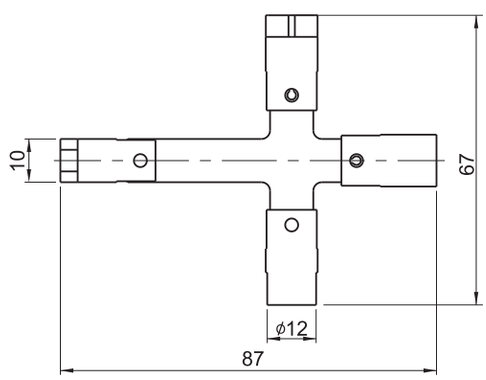

Type of key [X]											
D3	D5	T6	T9	T10	KW6	KW7	KW 8	N	C9	C	L

CATALOGUE NUMBER	COMPONENTS	MATERIAL
2.KLT-WF.001	Tip	Steel zinc plated
	Phillips	Stainless steel

How to order :

2.KLT-WF.001 — KW8 — T9 — L — T10

Catalogue numbe

Type of key

LOCK ZG

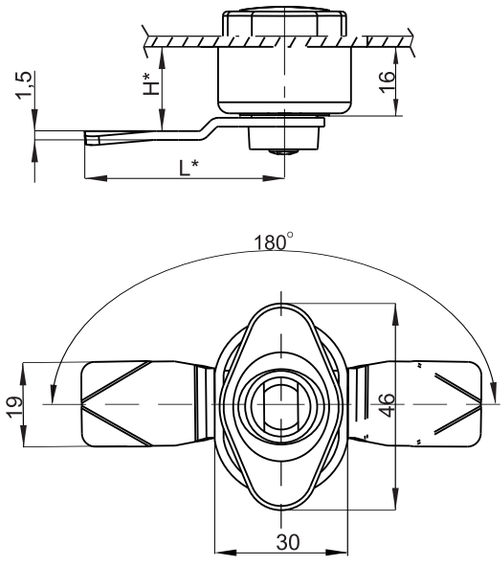

LOCK ZG AX

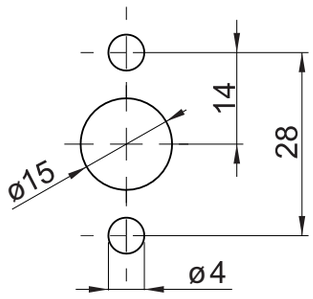

Cut Out

Table no. 1

CAM CODE	H*	L*	INSERT [X]	
001	16	30		
002	16	45		
003	19	30		
004	19	45	GZ	N

TYPE OF LOCK	COMPONENTS	MATERIAL	FINISH [C]	
			RAL 9005	RAL 7035
	Housing, insert	Polyamide	07	08
	Blokade	Steel zinc plated	-	-
		Stainless steel		

How to order :

ZGAX.01 — GZ — 003 — C

Type of lock

Type of insert [X]

Cam code

Finish [C]

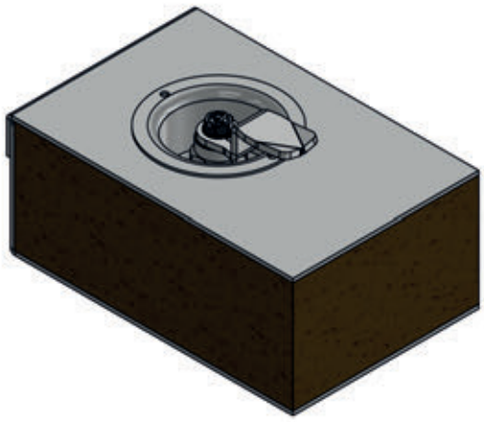

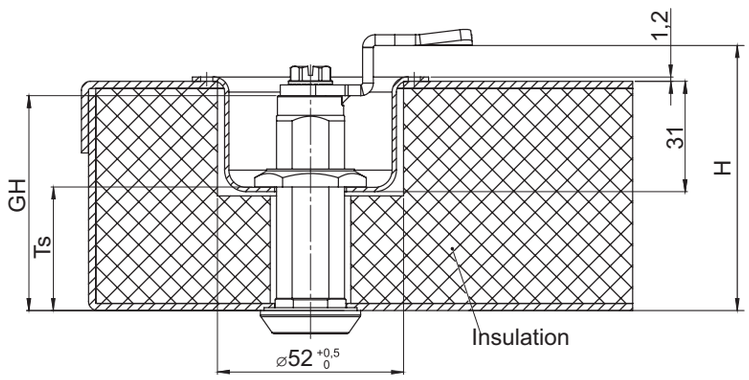

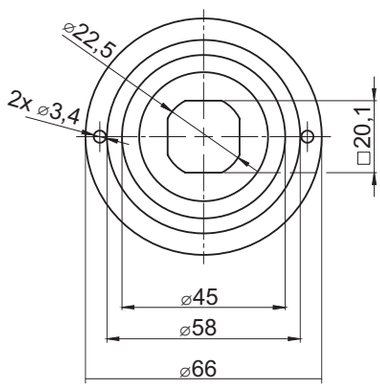

Fitted with locks M22 reducing the thickness of insulated doors
Fitted with locks M22, M22-30, M22-60.
Ts - the thickness of the door.

CATALOGUE NO.	DETAIL	MATERIAL
2.920.001	Adapter	Zinc plated steel

Latch 3.ST201, 3.ST202

stainless steel

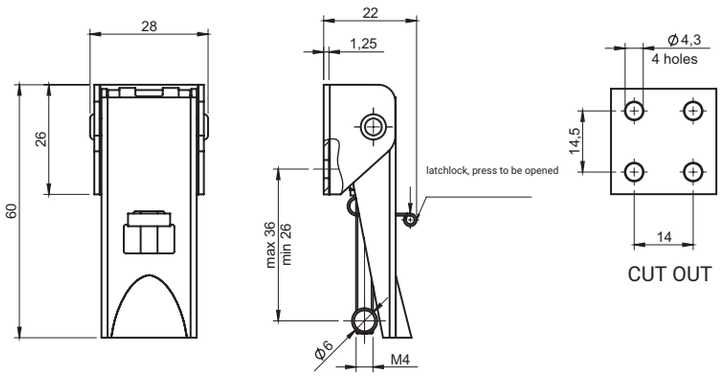

Preferred catch:
- 3.ST200.001 (2B-1)
- 3.ST200.001SN (2B-1)
- 3.ST201UN.001 (2B-1)
- 3.ST201UN.001SN (2B-1)

Catch ordered separately

CATALOGUE NUMBER	MATERIAL
3.ST201.001	Steel zinc plated
3.ST201.001SN	Stainless steel

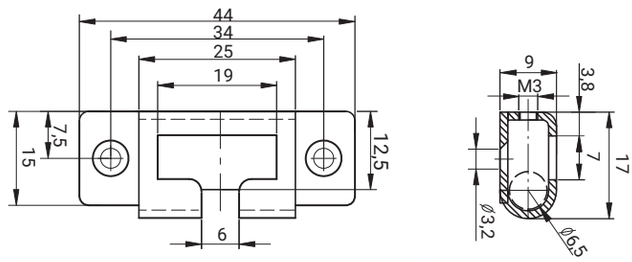

CATALOGUE NUMBER	MATERIAL
3.ST201UN.001	Steel zinc plated
3.ST201UN.001SN*	Stainless steel

stainless steel

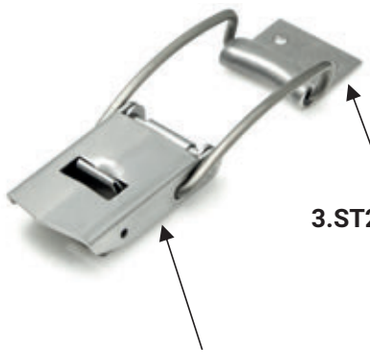

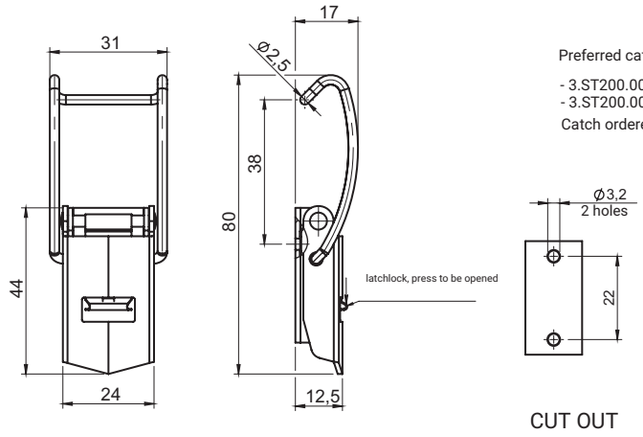

Preferred catch:
- 3.ST200.002 (2B-1)
- 3.ST200.002SN (2B-1)

Catch ordered separately

CATALOGUE NUMBER	MATERIAL
3.ST202.001	Steel zinc plated
3.ST202.001SN	Stainless steel

3.ST200.001

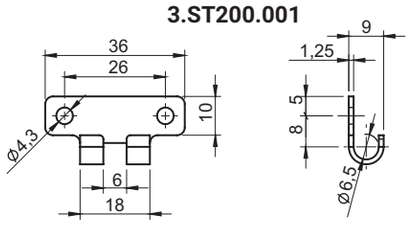

3.ST200.002

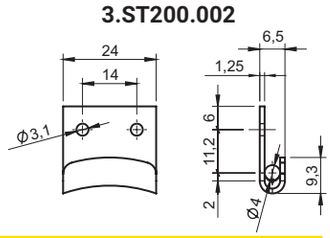

CATALOGUE NUMBER	MATERIAL
3.ST200.001	Steel zinc plated
3.ST200.001SN	Stainless steel
3.ST200.002*	Steel zinc plated
3.ST200.002SN*	Stainless steel

* detail to be ordered separately

stainless steel

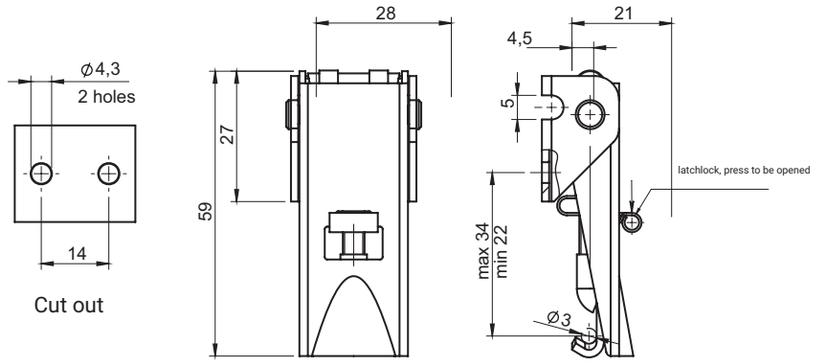

Preferred catch:
- 3.ST200.003 (2B-2)
- 3.ST200.003SN (2B-2)

Catch ordered separately

CATALOGUE NUMBER	MATERIAL
3.ST204.001	Steel zinc plated
3.ST204.001SN	Stainless steel

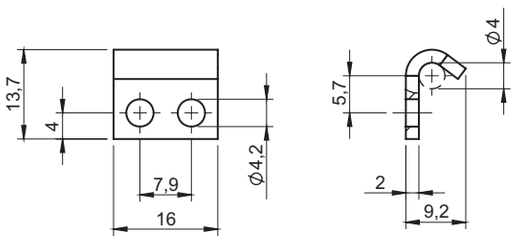

Catch can be used with:
3.ST204.001
3.ST204.001SN
3.ST205.001
3.ST205.001SN

CATALOGUE NUMBER	MATERIAL
3.ST200.003*	Steel zinc plated
3.ST200.003SN*	Stainless steel

* detail to be ordered separately

stainless steel

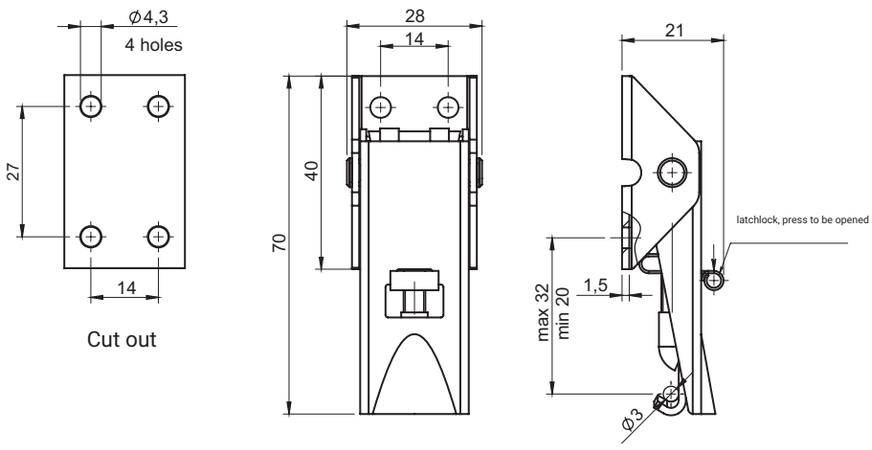

Preferred catch:
- 3.ST200.003 (2B-2)
- 3.ST200.003SN (2B-2)

Catch ordered separately

CATALOGUE NUMBER	MATERIAL
3.ST205.001	Steel zinc plated
3.ST205.001SN	Stainless steel

Latch 3.ST264, 3.ST265

stainless steel

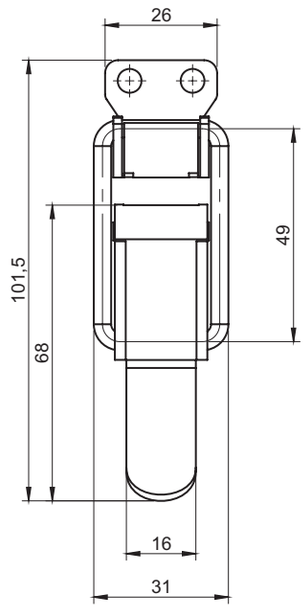

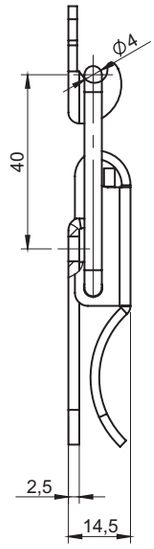

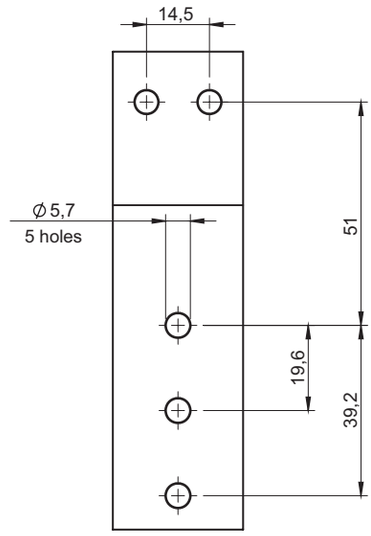

Cut out

Latch supplied with a catch

CATALOGUE NO.	MATERIAL
3.ST264.001	Stainless steel

stainless steel

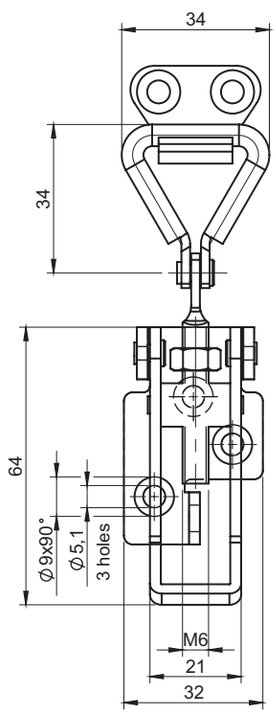

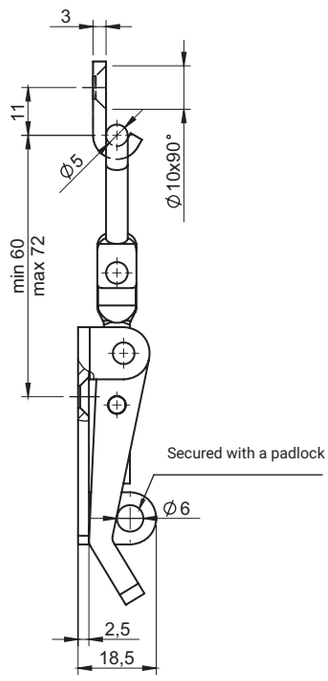

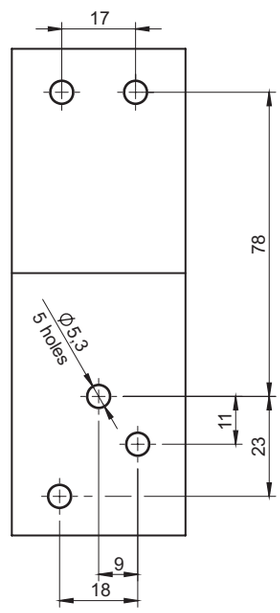

Cut out

CATALOGUE NO.	DETAIL	MATERIAL
3.ST265.001SN	Latch secured with a padlock	Stainless steel

stainless steel

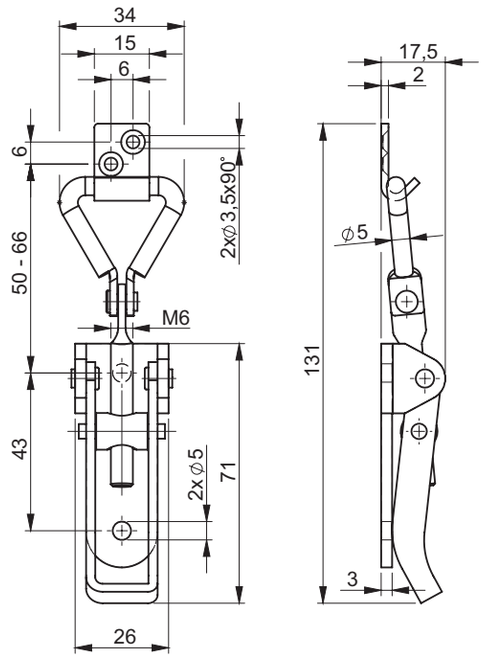

CATALOGUE NUMBER	MATERIAL
3.ST265.002	Steel zinc plated
3.ST265.002SN	Stainless steel

stainless steel

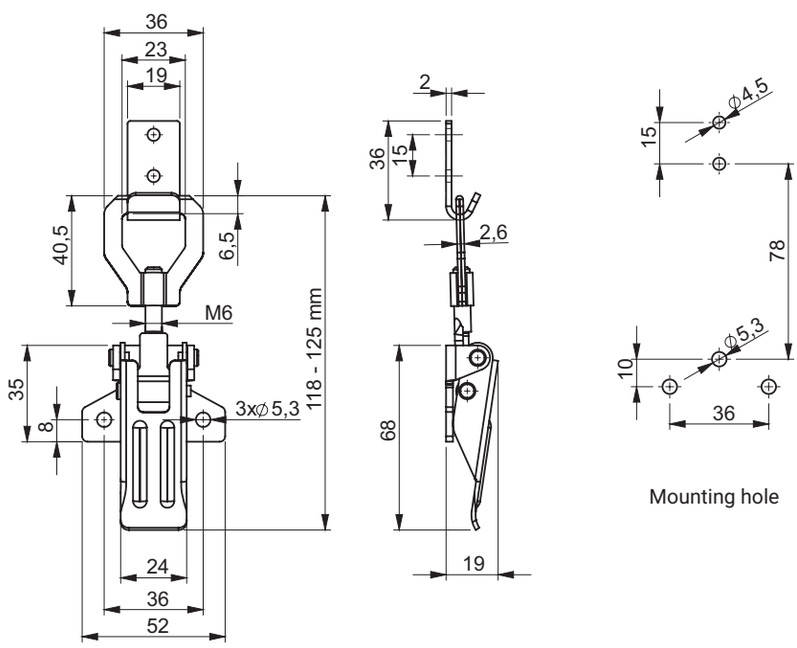

CATALOGUE NUMBER	MATERIAL
3.ST265.003	Steel zinc plated
3.ST265.003SN	Stainless steel

Latch 3.ST206, 3.ST207

stainless steel

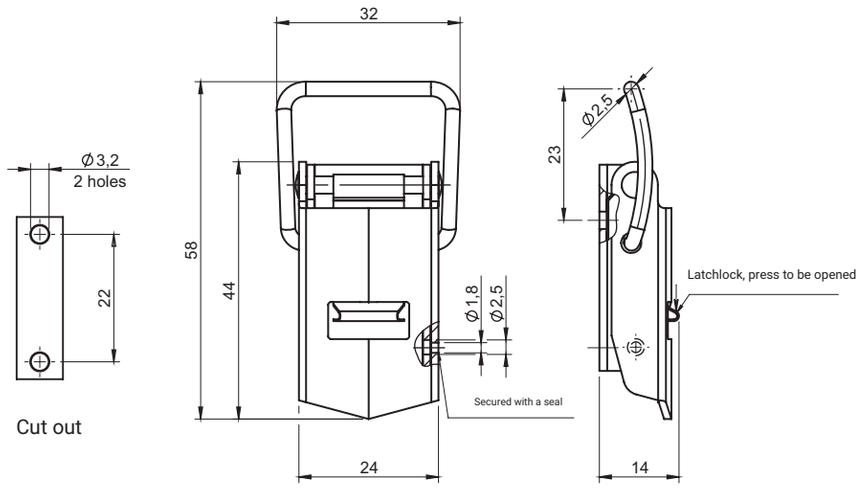

Preferred catch:
- 3.ST200.002 (2B-1)
- 3.ST200.002SN (2B-1)

Catch ordered separately

CATALOGUE NUMBER	MATERIAL
3.ST206.001*	Steel zinc plated
3.ST206.001SN*	Stainless steel

stainless steel

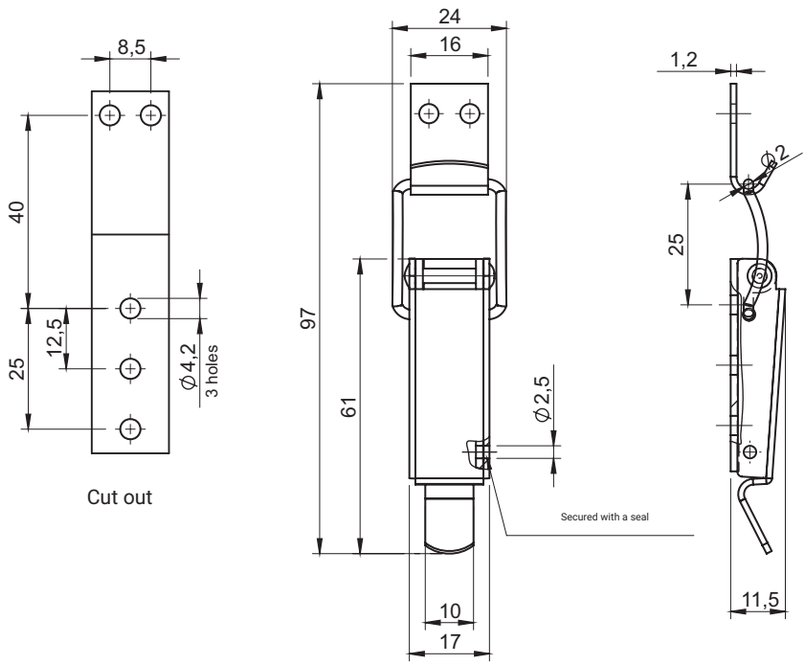

Latch supplied with a catch

CATALOGUE NUMBER	MATERIAL
3.ST207.001	Steel zinc plated
3.ST207.001SN	Stainless steel

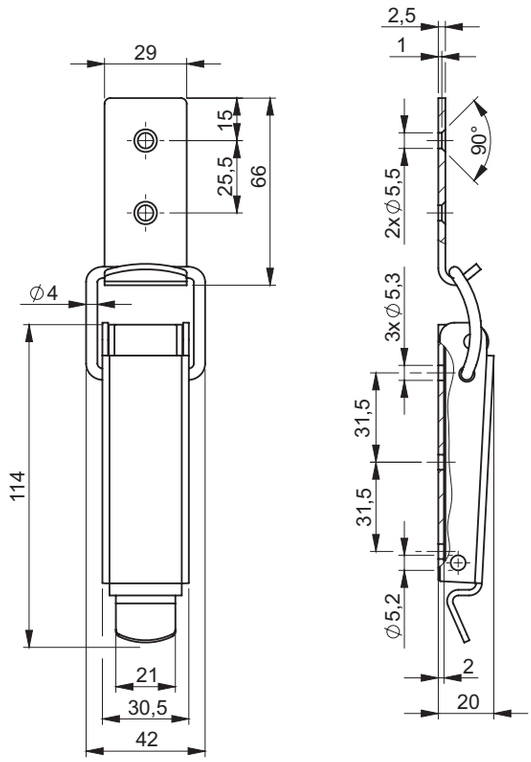

stainless steel

CATALOGUE NUMBER	MATERIAL
3.ST209.001	Steel zinc plated
3.ST209.001SN	Stainless steel

stainless steel

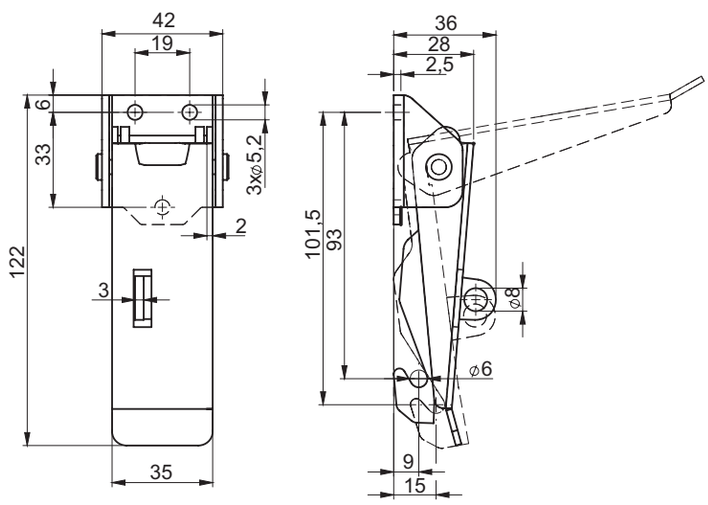

CATALOGUE NUMBER	MATERIAL
3.ST211.001	Steel zinc plated
3.ST211.001SN	Stainless steel

Latch 3.ST261, 3.ST262

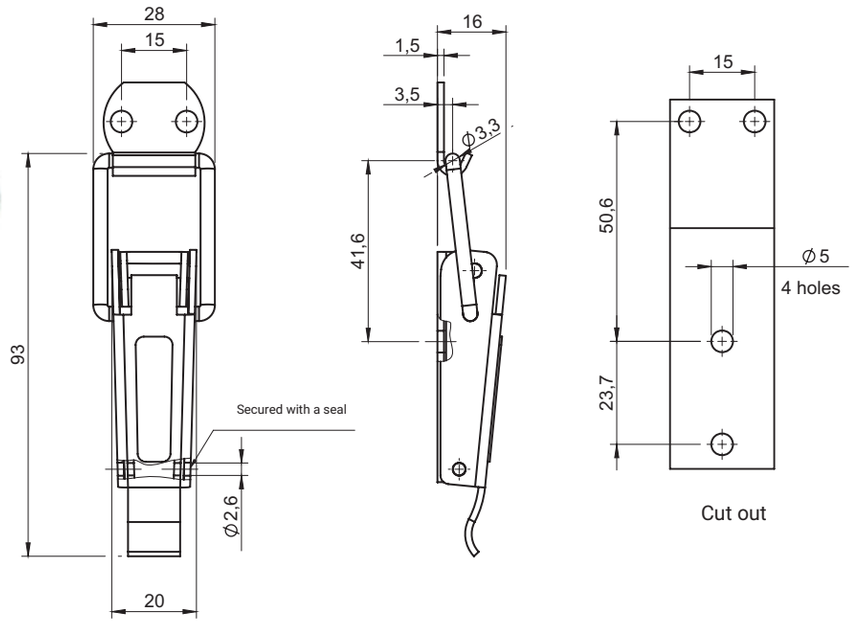

Latch supplied with a catch

CATALOGUE NUMBER	MATERIAL
3.ST261.001	Steel zinc plated

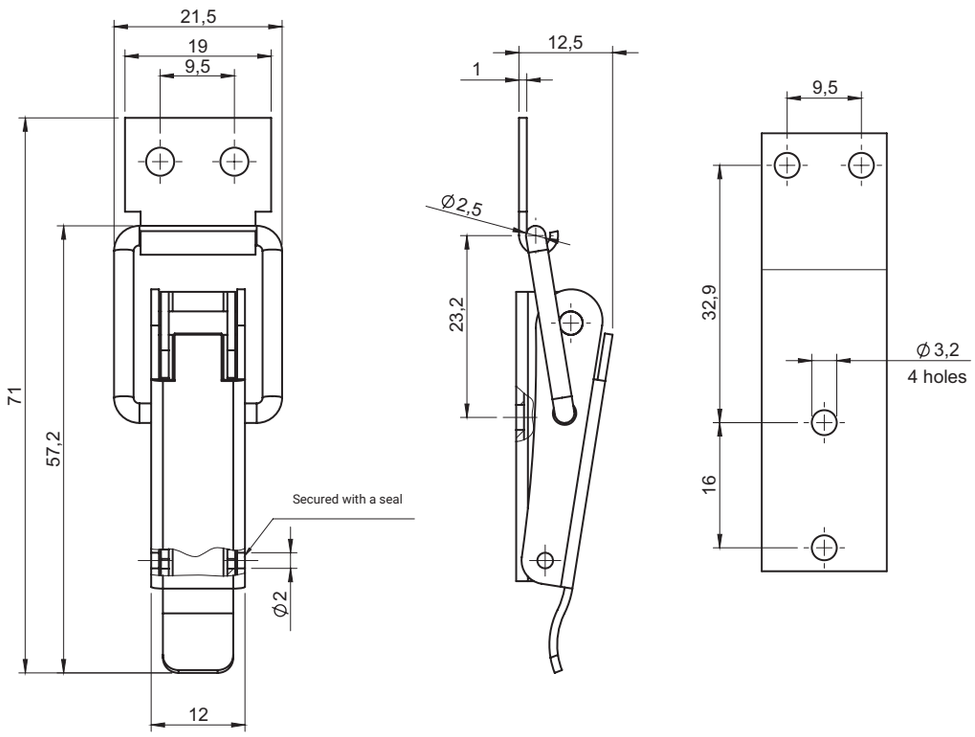

Latch supplied with a catch

CATALOGUE NUMBER	MATERIAL
3.ST262.001	Steel zinc plated

stainless steel

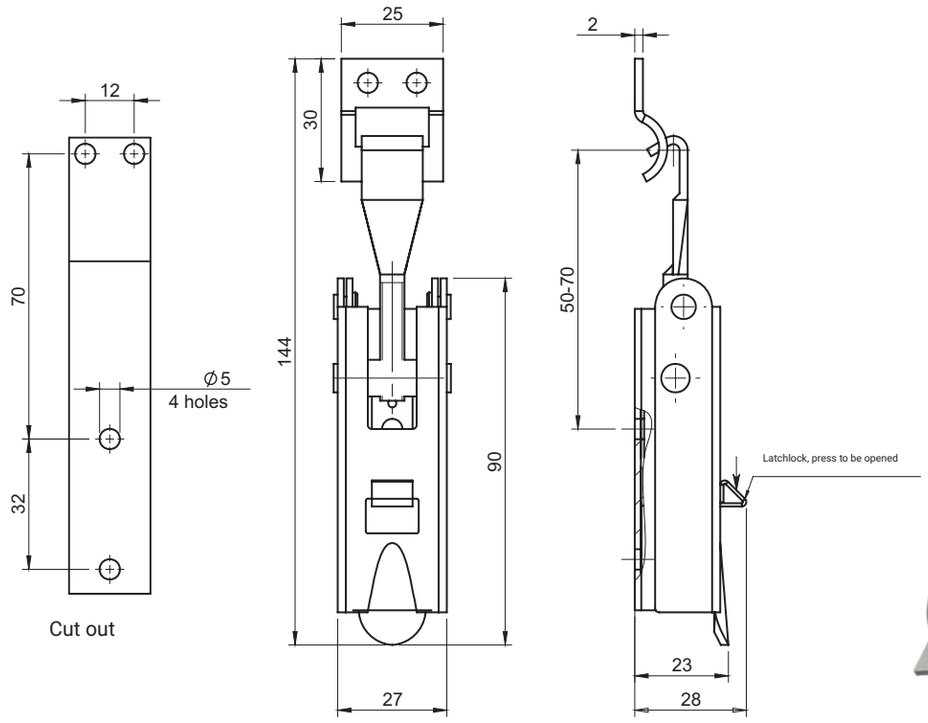

Latch supplied with a catch

CATALOGUE NUMBER	MATERIAL
3.ST208.001	Steel zinc plated
3.ST208.001SN	Stainless steel

stainless steel

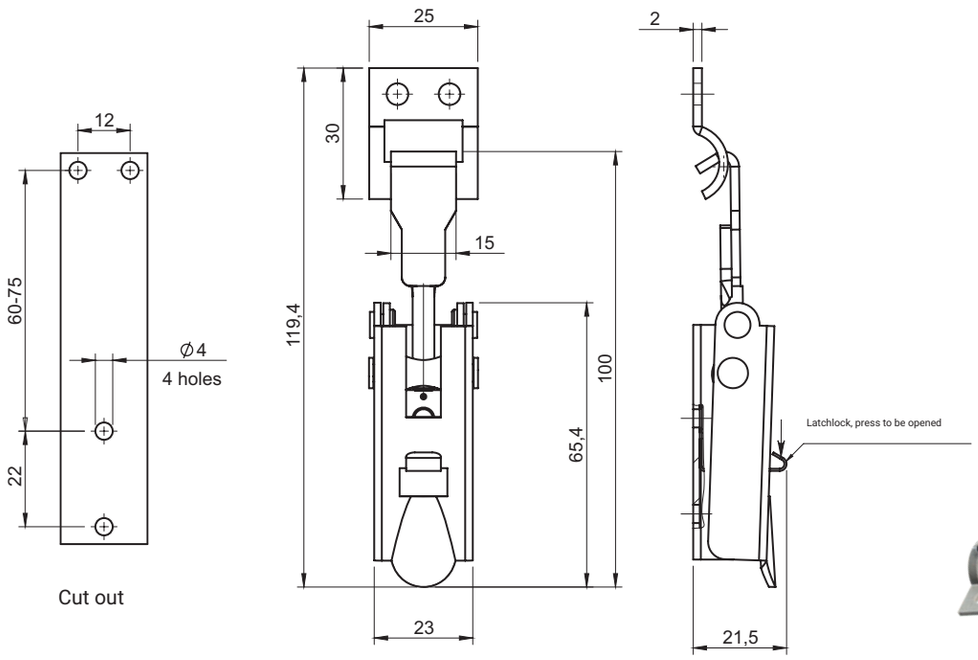

Latch supplied with a catch

CATALOGUE NUMBER	MATERIAL
3.ST210.001	Steel zinc plated
3.ST210.001SN	Stainless steel

Latch 3.ST263.001, 3ST263.100

ROZTOCZE

stainless steel

3.ST263.001

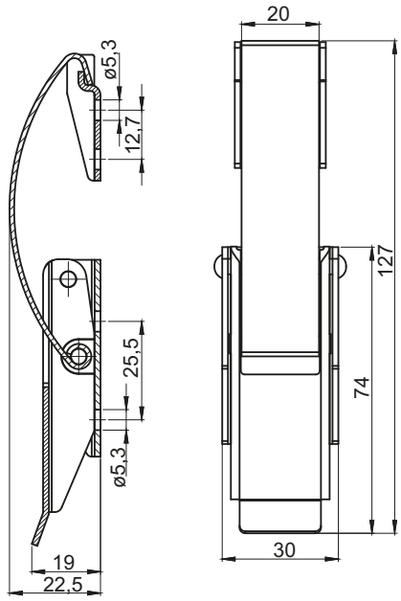

3.ST263.001.04A

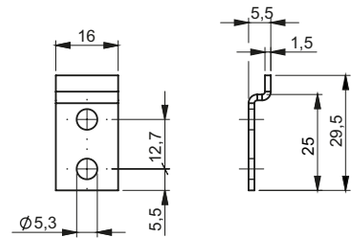

3.ST263.001.04B

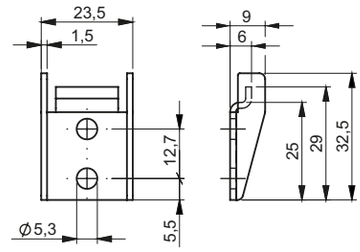

CATALOGUE NUMBER	MATERIAL	FINISH [C]
		RAL 9005
3.ST263.001	Steel zinc plated	04
3.ST263.001SN	Stainless steel	-
3.ST263.001.04A	Steel zinc plated	04
3.ST263.001.04B		
3.ST263.001.04ASN	Stainless steel	04
3.ST263.001.04BSN		

stainless steel

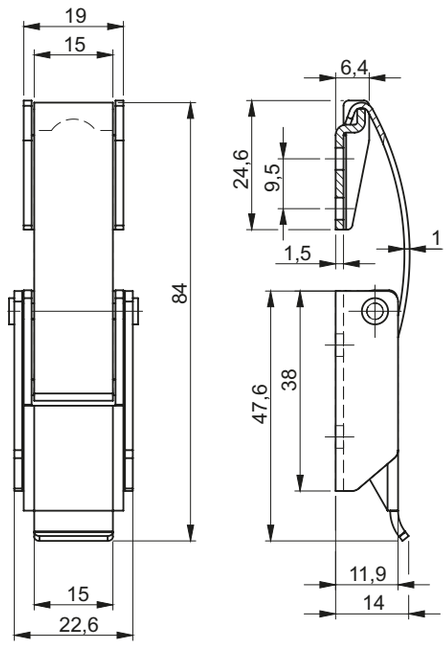

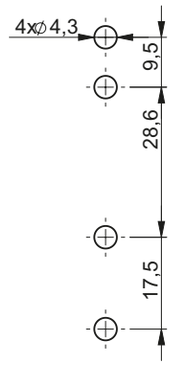

Mounting hole

CATALOGUE NUMBER	MATERIAL
3.ST263.100	Steel zinc plated
3.ST263.100SN	Stainless steel

stainless steel

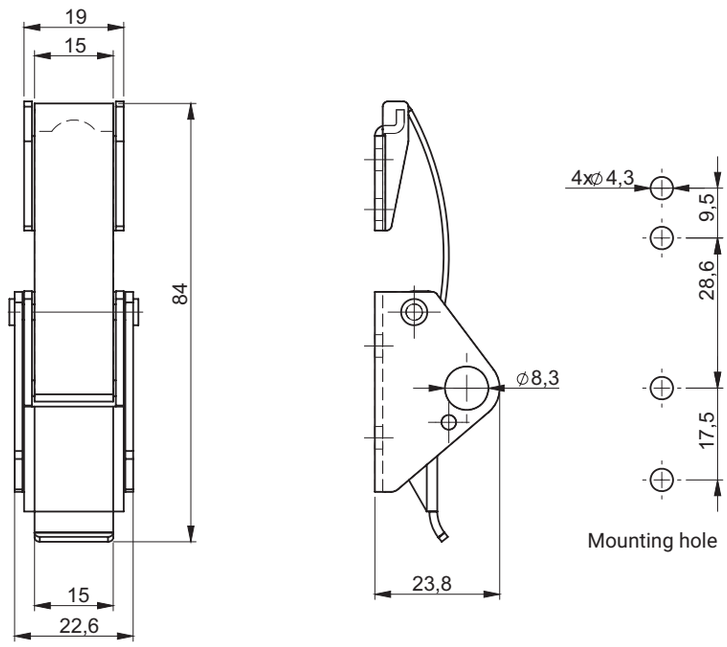

CATALOGUE NUMBER	DETAIL	MATERIAL
3.ST263.101	Latch secured with a padlock	Steel zinc plated
3.ST263.101SN		Stainless steel

stainless steel

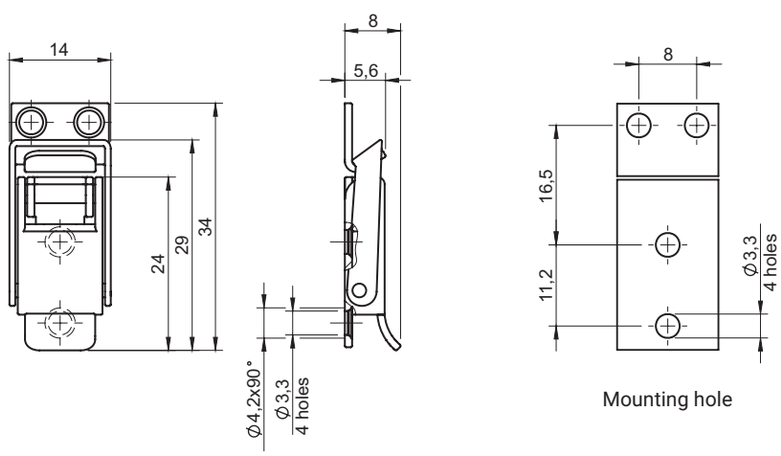

Latch supplied with a catch

CATALOGUE NUMBER	MATERIAL
3.561.001	Stainless steel

Latch 3.562

stainless steel

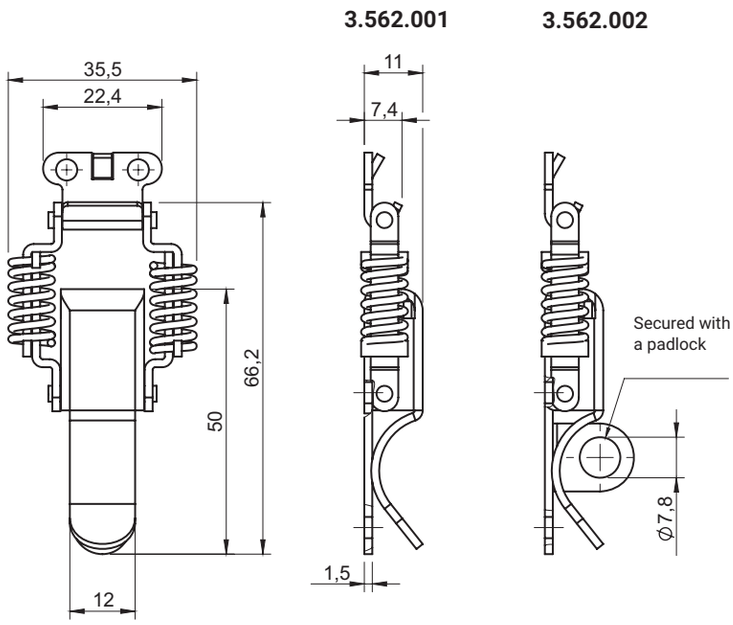

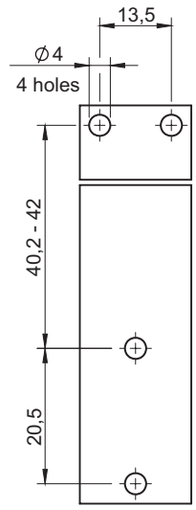

Mounting hole

Latch supplied with a catch

CATALOGUE NUMBER	MATERIAL
3.562.001	Stainless steel
3.562.002	Stainless steel

stainless steel

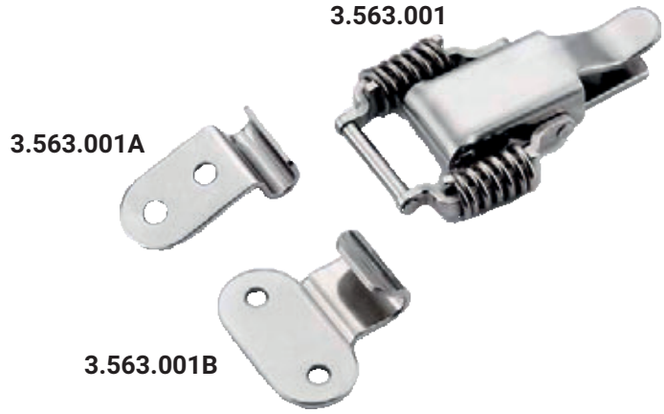

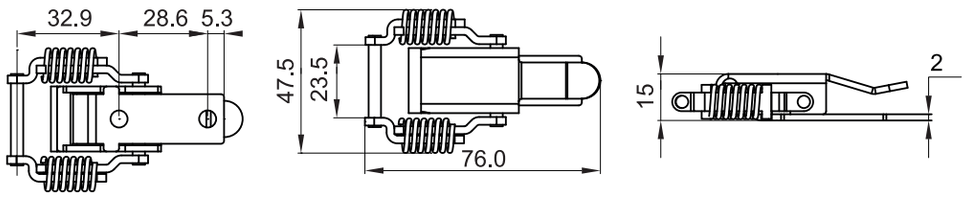

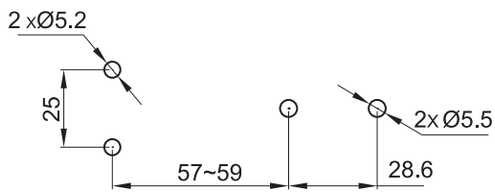

Mounting hole

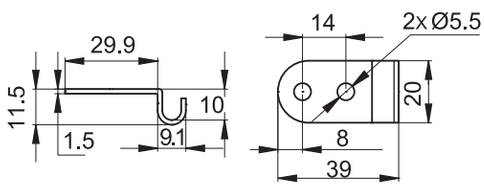

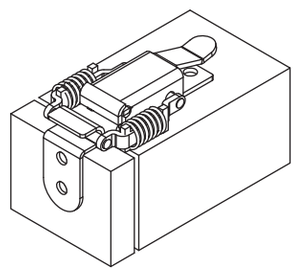

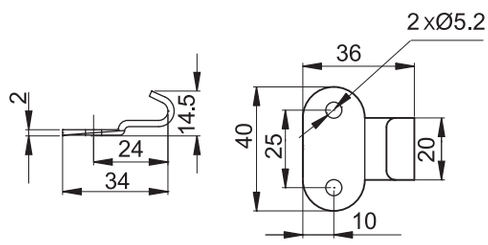

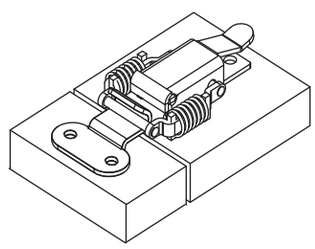

CATALOGUE NUMBER	MATERIAL
3.563.001	Stainless steel

Latch 4.490, 4.491

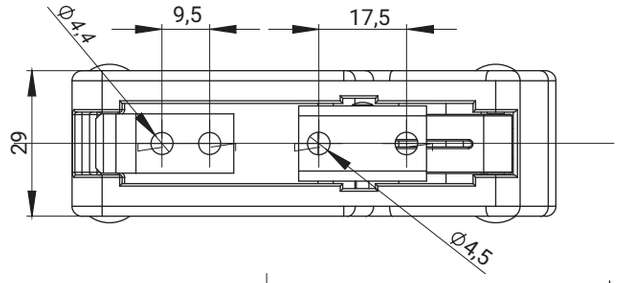

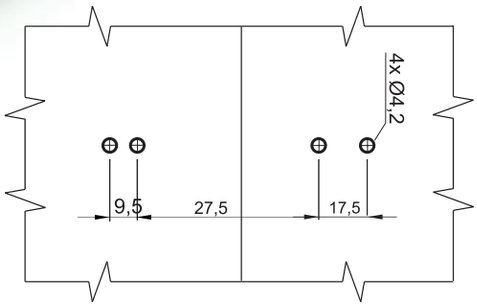

Mounting hole

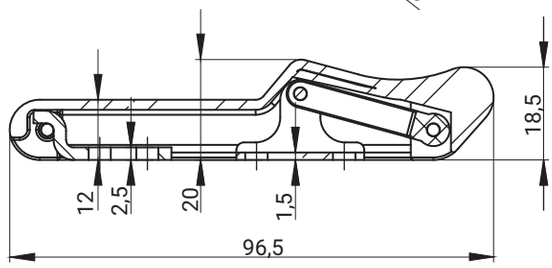

CATALOGUE NUMBER	MATERIAL	FINISH [C]	
		RAL 9005	
4.490.001	Plastic - elastomer	07	

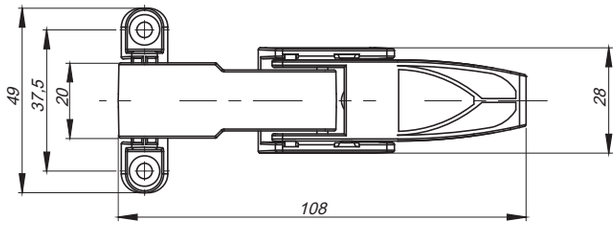

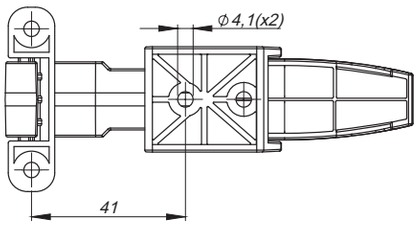

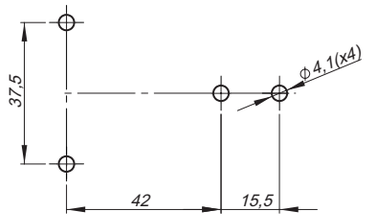

Mounting hole

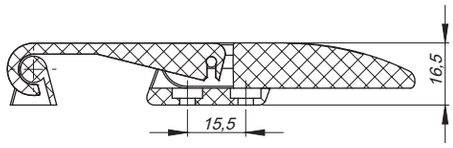

CATALOGUE NUMBER	MATERIAL	FINISH [C]	
		RAL 9005	RAL 7035
4.491.001	PP	07	08

How to order : **4.491.001** – **C**

Catalogue number

Finish

stainless steel

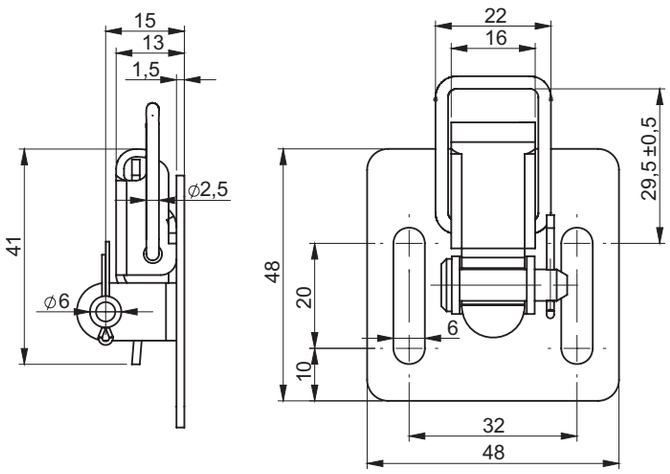

Latch with protection against unwanted opening.
Latch compatible with a catch 3.ST200.003SN - ordered separately.

CATALOGUE NUMBER	MATERIAL
3.ST264.002	Steel zinc plated
3.ST264.002SN	Stainless steel

stainless steel

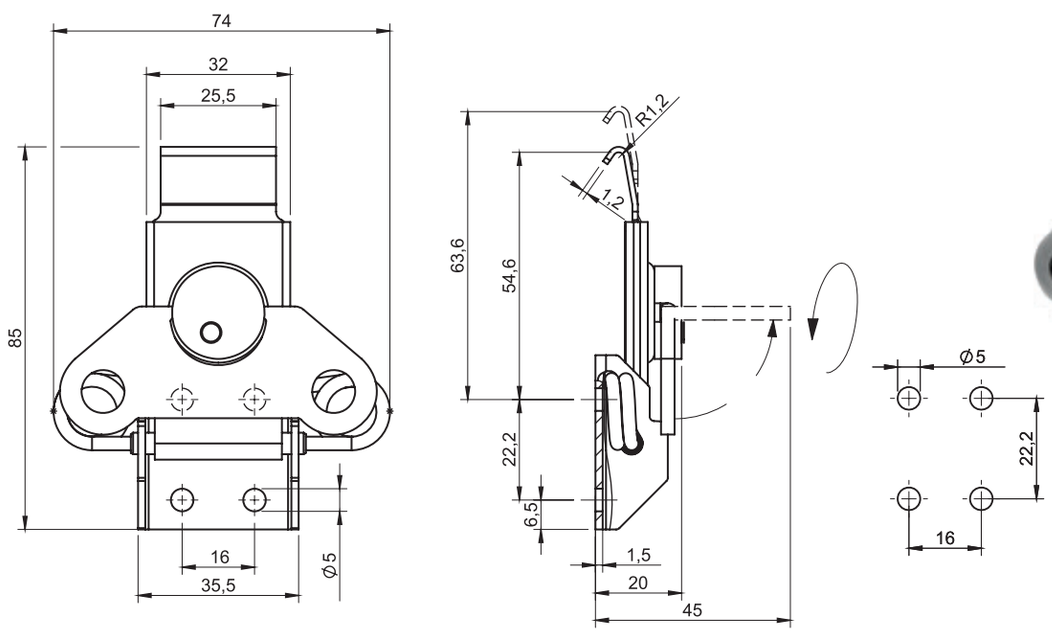

Latch opens by lifting the knob and turning counterclockwise.

CATALOGUE NUMBER	MATERIAL
3.ST267.001SN	Stainless steel

Latch 3.565, 3.566

stainless steel

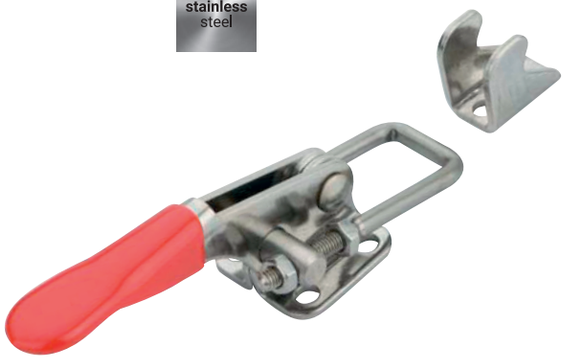

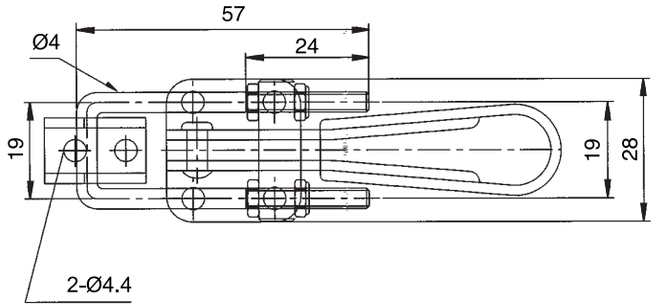

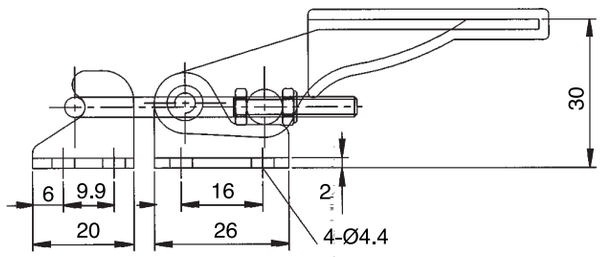

Note: Maximum load 160kg

CATALOGUE NUMBER	MATERIAL
3.565.001	Stainless steel

stainless steel

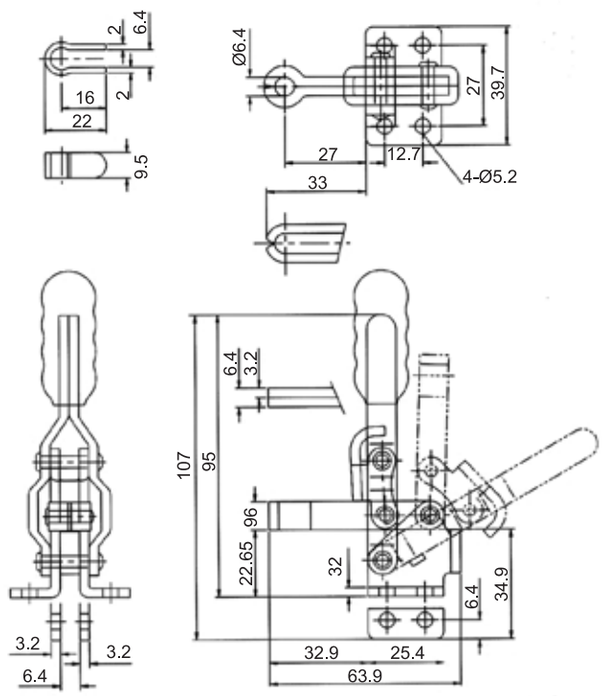

Note: Maximum load 95kg

CATALOGUE NUMBER	MATERIAL
3.566.001	Stainless steel

stainless steel

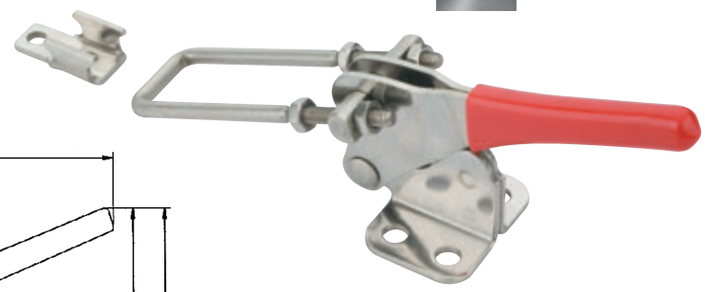

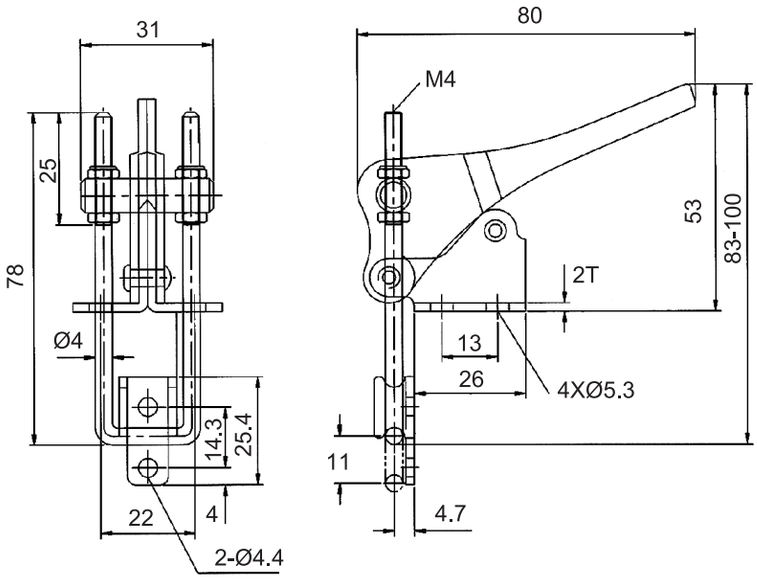

Note: Maximum load 225kg

CATALOGUE NUMBER	MATERIAL
3.567.001	Stainless steel

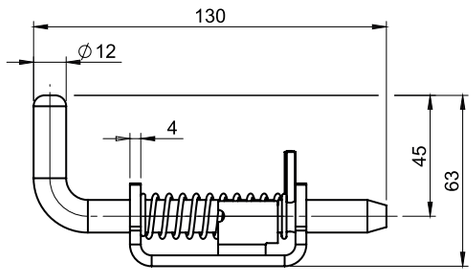

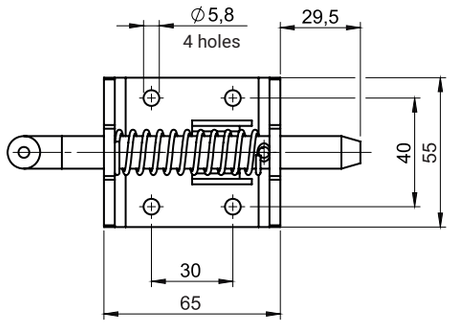

Locked Position

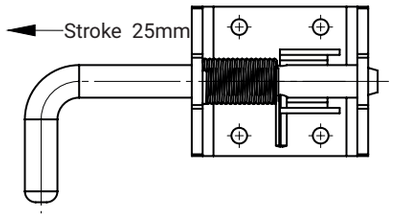

Open Position

CATALOGUE NUMBER	COMPONENTS	MATERIAL
4.700.001	Base Mount, Locking Pin	Steel zinc plated
	Spring	Stainless steel
4.700.001SN	Base Mount, Locking Pin	Stainless steel

1 Locking systems
2 Locks Latches
3 External hinges
4 Clamps
5 Accessories
6 Gasketing profiles
7 Custom products

Hinge 3.ZN1, 3.ZN2

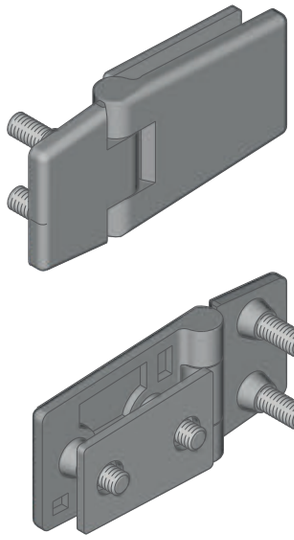

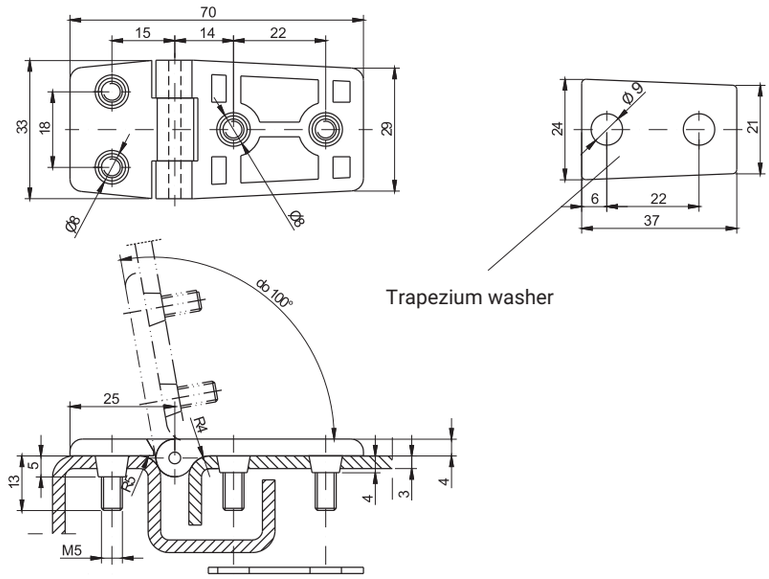

CATALOGUE NUMBER	COMPONENTS	MATERIAL	FINISH [C]	
			RAL 9005	RAL 7035
3.ZN1.001	Holder, Base	ZAMAK 5	04	05
	Pin	Brass		
	Washer, nut	Steel zinc plated		

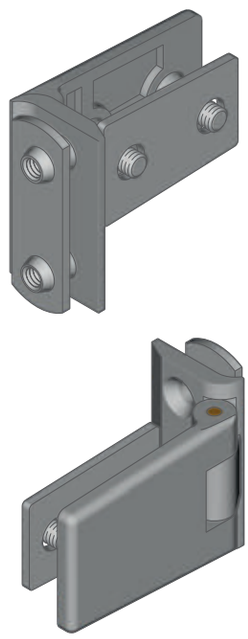

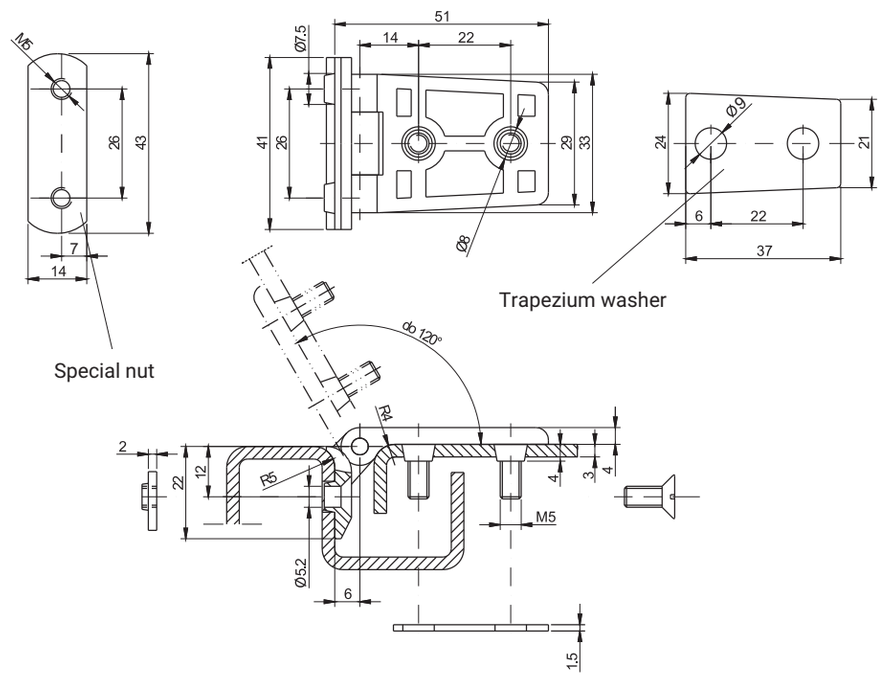

CATALOGUE NUMBER	COMPONENTS	MATERIAL	FINISH [C]	
			RAL 9005	RAL 7035
3.ZN2.001	Holder, Base	ZAMAK 5	04	05
	Pin	Brass		
	Washer, nut	Steel zinc plated		

How to order: 3.ZN1.001 — C

Catalogue number

Finish

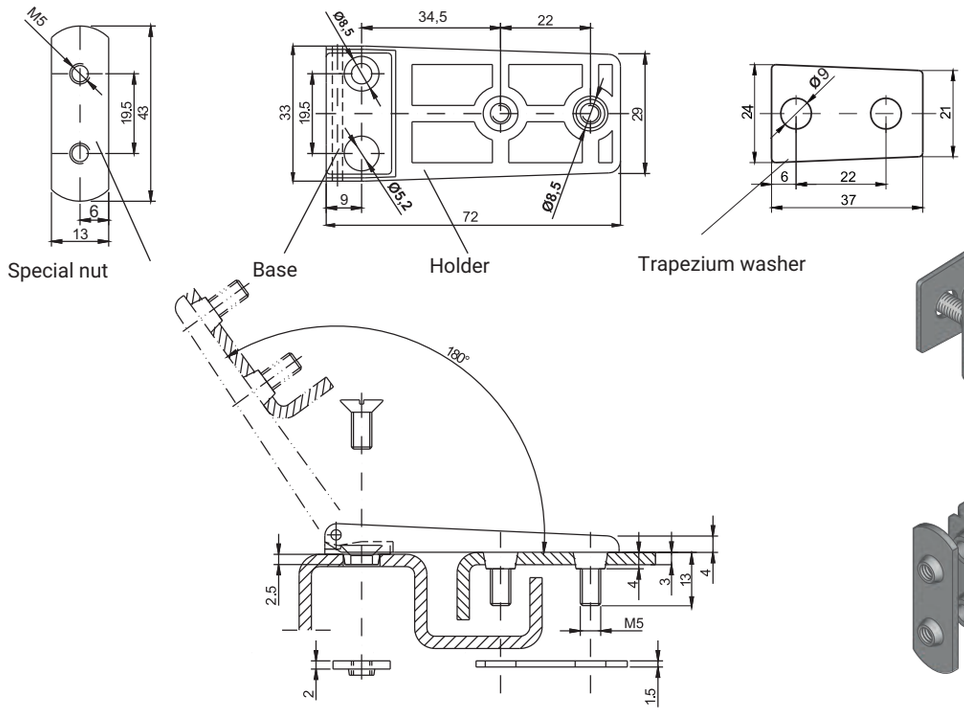

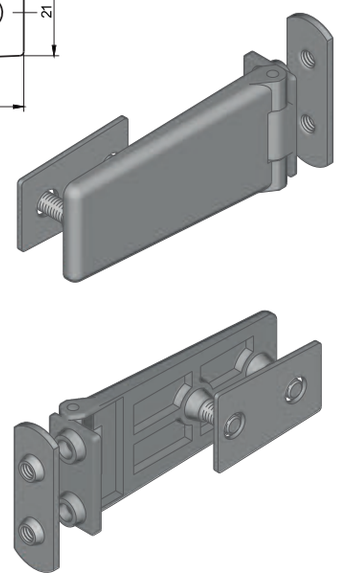

CATALOGUE NUMBER	COMPONENTS	MATERIAL	FINISH [C]	
			RAL 9005	RAL 7035
3.ZN3.001	Holder, Base,	ZAMAK 5	04	05
	Pin	Brass		
	Washer, nut	Steel zinc plated		

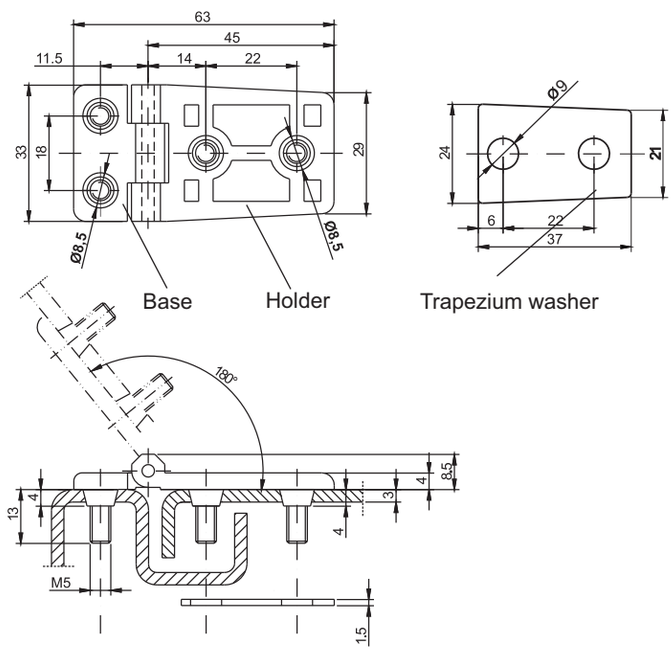

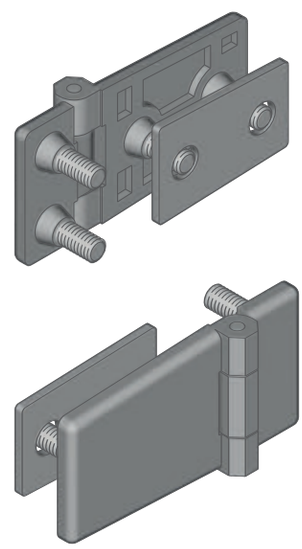

CATALOGUE NUMBER	COMPONENTS	MATERIAL	FINISH [C]	
			RAL 9005	RAL 7035
3.ZN4.001	Holder, Base,	ZAMAK 5	04	05
	Pin Washer	Steel zinc plated		

How to order: 3.ZN3.001 — C

Catalogue number

Finish

Hinge 3.ZN115, 3.ZN110

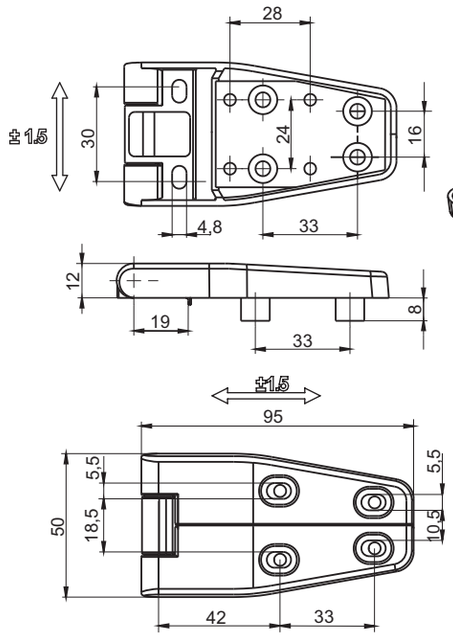

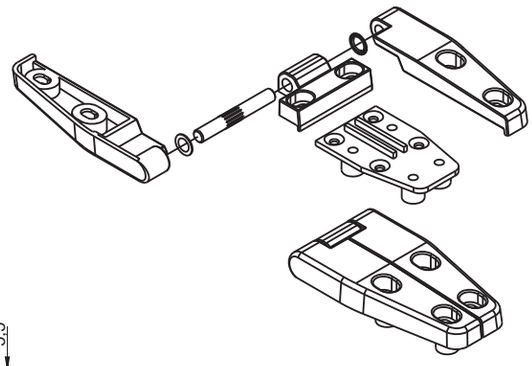

CATALOGUE NUMBER	COMPONENTS	MATERIAL	FINISH [C]	
			RAL 9005	RAL 7035
3.ZN115.001	Holder, Base,	ZAMAK 5	04	05
	Pin Washer, Nut	Steel zinc plated		

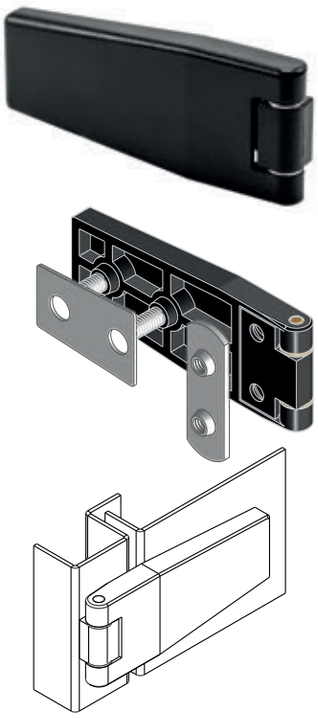

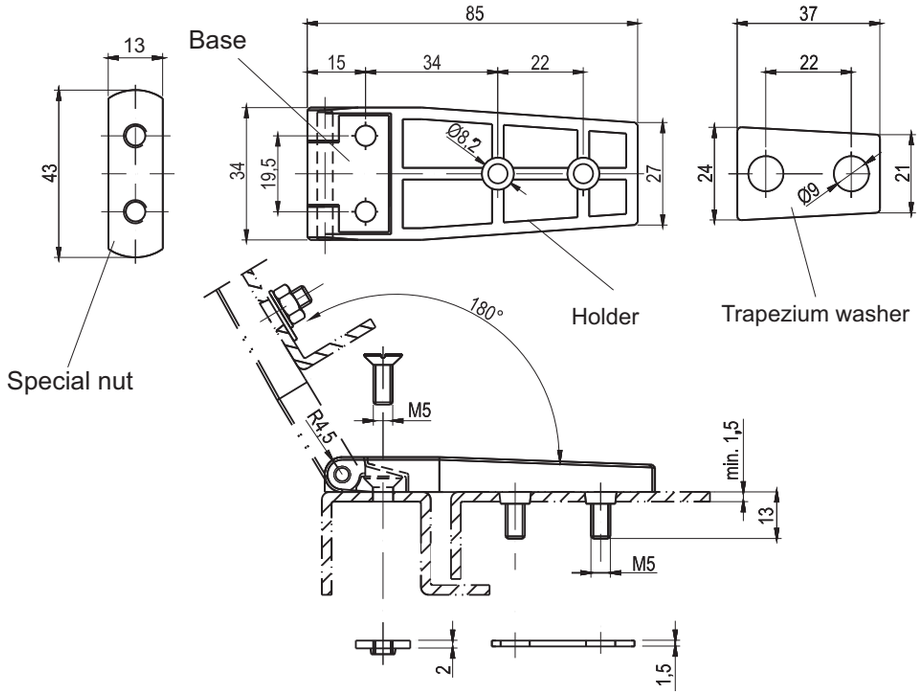

CATALOGUE NUMBER	COMPONENTS	MATERIAL	FINISH [C]	
			RAL 9005	RAL 7035
3.ZN110.001	Holder, Base,	ZAMAK 5	04	05
	Pin Washer, Nut	Steel zinc plated		

How to order: 3.ZN115.001 — C

Catalogue number

Finish

Hinge 3.ZN60

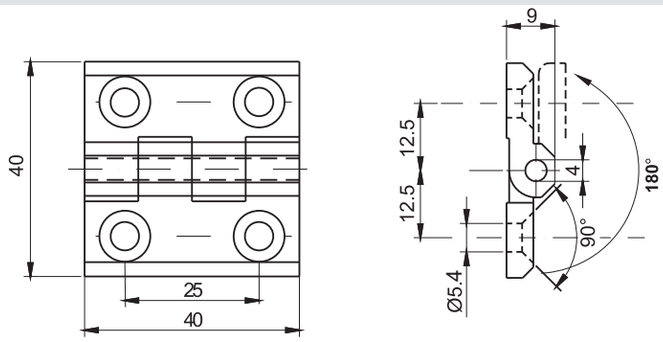

CATALOGUE NUMBER	COMPONENTS	MATERIAL	FINISH [C]			
			Chrome	RAL9005	RAL7035	Stainless steel
3.ZN60.001	Holder, Base	ZAMAK 5 *	01	04	05	-
	Pin	Stainless steel *				
3.ZN60.001PA	Holder, Base	Polyamide	-	07	-	-
	Pin	Stainless steel *				
3.ZN60.003SN	Holder, Base, Pin	Stainless steel polished	-	-	-	9.1

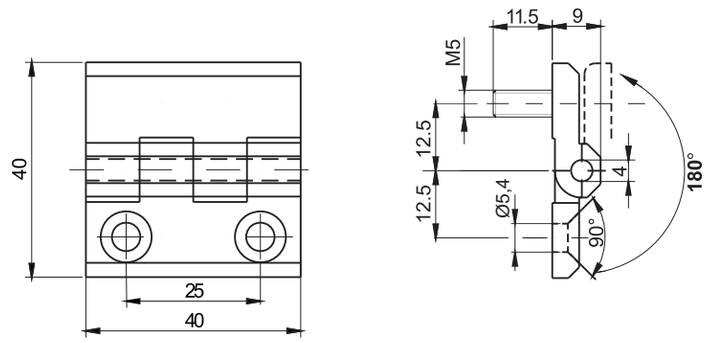

CATALOGUE NUMBER	COMPONENTS	MATERIAL	FINISH [C]		
			Chrome	RAL9005	RAL7035
3.ZN60.004	Holder, Base	ZAMAK 5 *	01	04	05
	Screw	Steel zinc plated *			
	Screw	Steel zinc plated *			

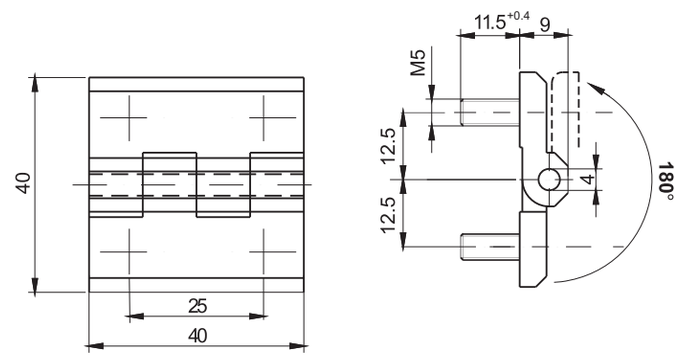

CATALOGUE NUMBER	COMPONENTS	MATERIAL	FINISH [C]		
			Chrome	RAL9005	RAL7035
3.ZN60.002	Holder, Base	ZAMAK 5 *	01	04	05
	Pin	Steel zinc plated *			
	Screw	Steel zinc plated *			

How to order:

Catalogue number — 3.ZN60.001

Finish — C

Hinge 3.509

ROZTOCZE

3.509.XY

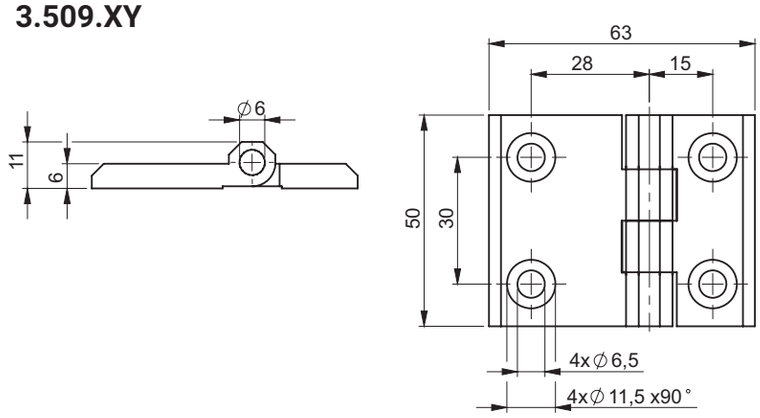

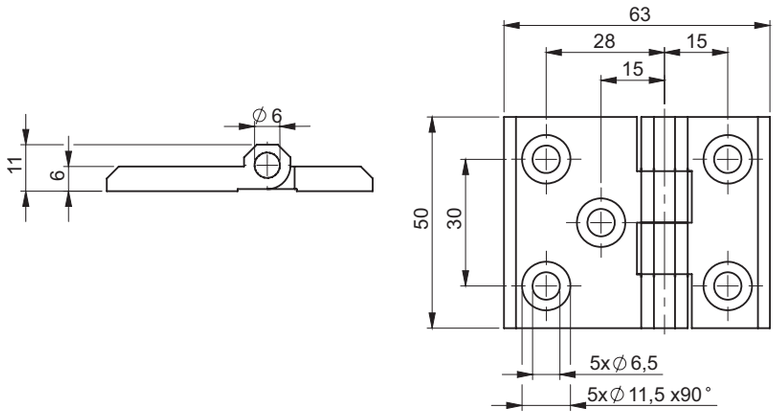

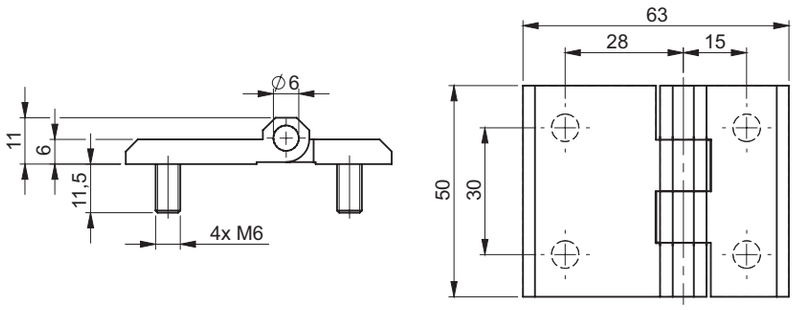

where:

X - the way of assembling the hinge
- **0** - version with 4 holes
- **1** - verision with 5 holes
- **3** - version with 4 screw

Y - finish
- **1** - Chrome
- **2** - RAL 9005

HINGE	FINISH	
3.509.XY	01	02
	11	12
	31	32

CATALOGUE NUMBER	COMPONENTS	MATERIAL
3.509.XY	Holder, Base	ZAMAK 5
	Pin	Stainless steel
	Screw	Steel zinc plated

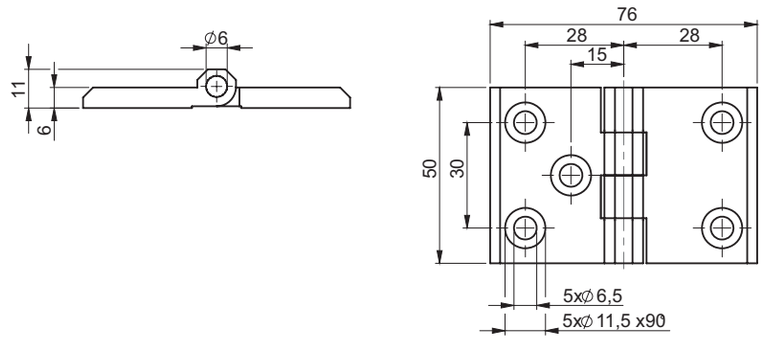

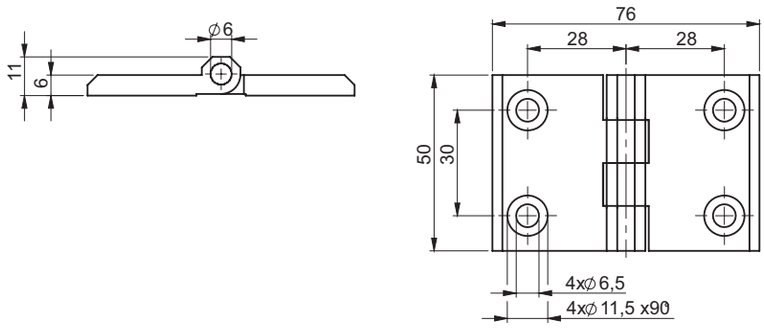

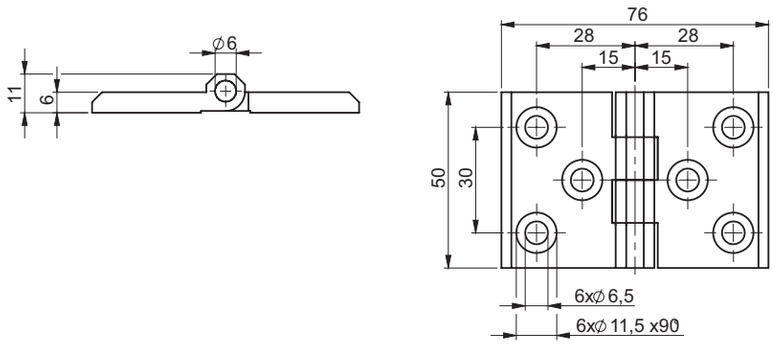

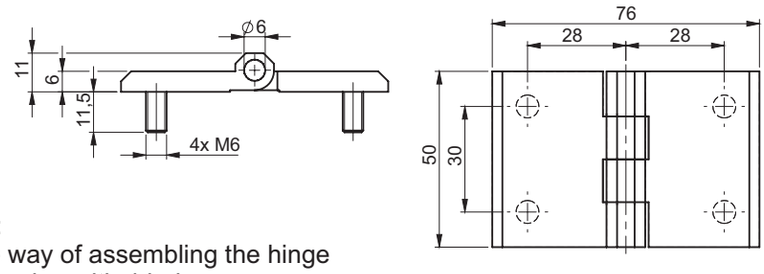

where:

X - the way of assembling the hinge
- 0 - version with 4 holes
- 1 - verision with 5 holes
- 2 - version with 6 holes
- 3 - version with 4 screw

Y - finish
- 1 - Chrome
- 2 - RAL 9005
- 3 - Polyamide

HINGE	FINISH		
3.510.XY	01	02	-
	11	12	-
	21	22	23
	31	32	-

CATALOGUE NUMBER	COMPONENTS	MATERIAL
3.510.XY	Holder, Base	ZAMAK 5/ Polyamide
	Pin	Stainless steel
	Screw	Steel zinc plated

Hinge 3.511

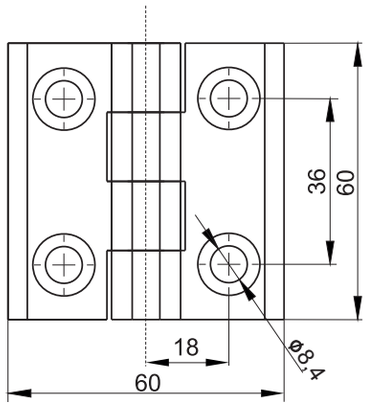

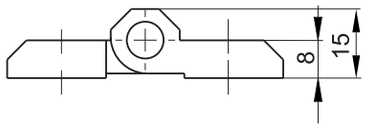

Use screws M8 DIN965

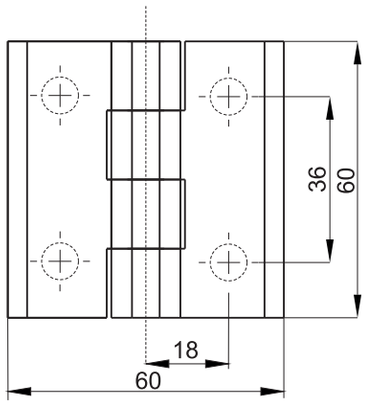

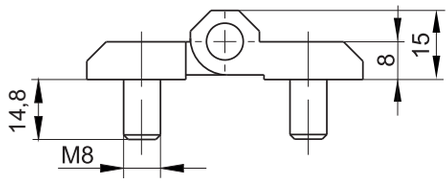

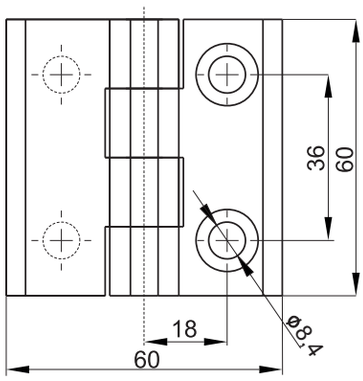

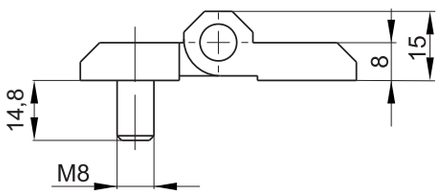

HINGE	FINISH	
3.511.XY	11	12
	21	22
	31	32

where:
X - the way of assembling the hinge
1 - version with 4 holes
2 - version with 4 threaded pins
3 - version with 2 holes and 2
Y - finish
1 - Chrome
2 - RAL 9005

CATALOGUE NUMBER	COMPONENTS	MATERIAL
3.511.XY	Holder, Base	ZAMAK 5
	Pin	Steel zinc plated

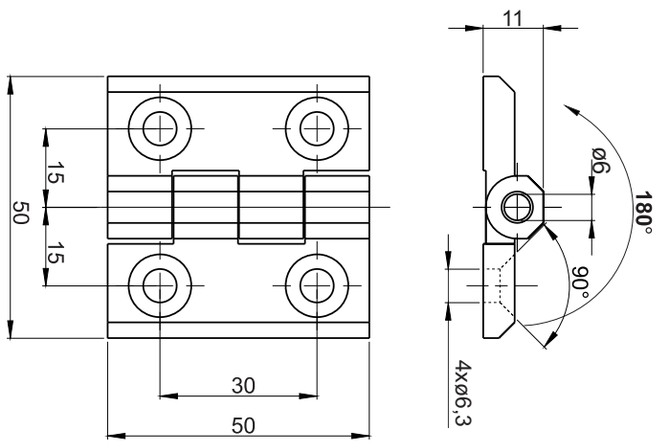

CATALOGUE NUMBER	COMPONENTS	MATERIAL	FINISH [C]		
			Chrome	RAL9005	RAL7035
3.ZN65.001	Holder, Base	ZAMAK 5 *	01	04	05

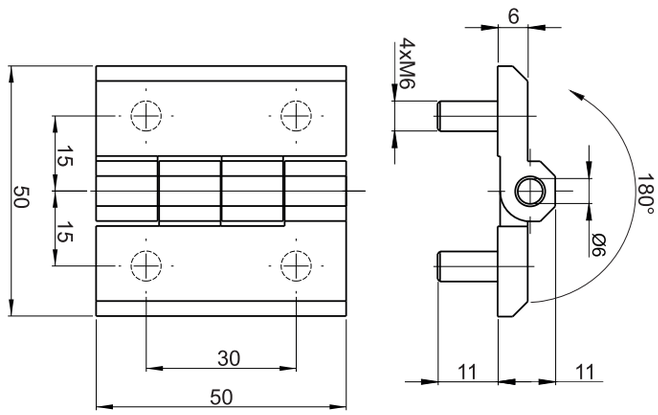

CATALOGUE NUMBER	COMPONENTS	MATERIAL	FINISH [C]		
			Chrome	RAL9005	RAL7035
3.ZN65.002	Holder, Base	ZAMAK 5*	01	04	05
	Screw	Steel zinc plated*			

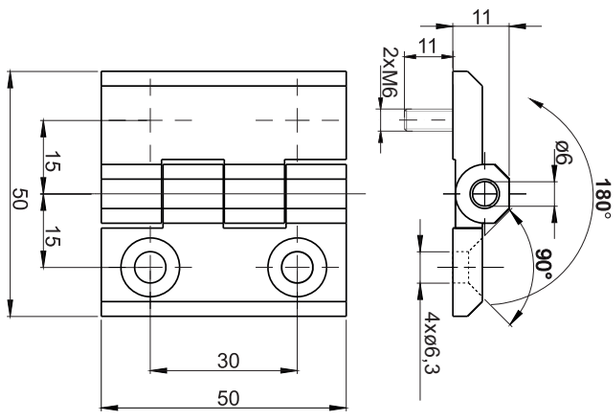

CATALOGUE NUMBER	COMPONENTS	MATERIAL	FINISH [C]		
			Chrome	RAL9005	RAL7035
3.ZN65.003	Holder, Base	ZAMAK 5*	01	04	05
	Screw	Steel zinc plated*			

How to order:

3.ZN65.001 — C

Catalogue number

Finish

Polyamide hinge
3.ZN30, 3.ZN60, 3.ZN65

ROZTOCZE

NEW

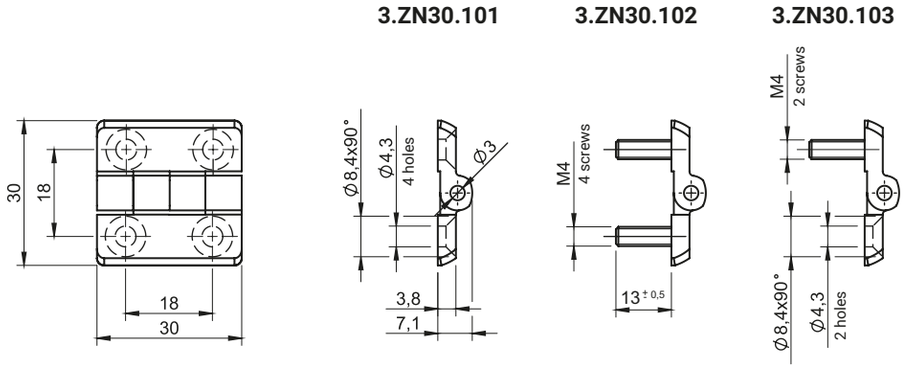

CATALOGUE NUMBER	COMPONENTS	MATERIAL	FINISH [C]
			RAL 9005
3.ZN30.101	Holder, Base	Polyamide	07
3.ZN30.102	Pin	Stainless steel	-
3.ZN30.103	Screws	Steel zinc plated	-

NEW

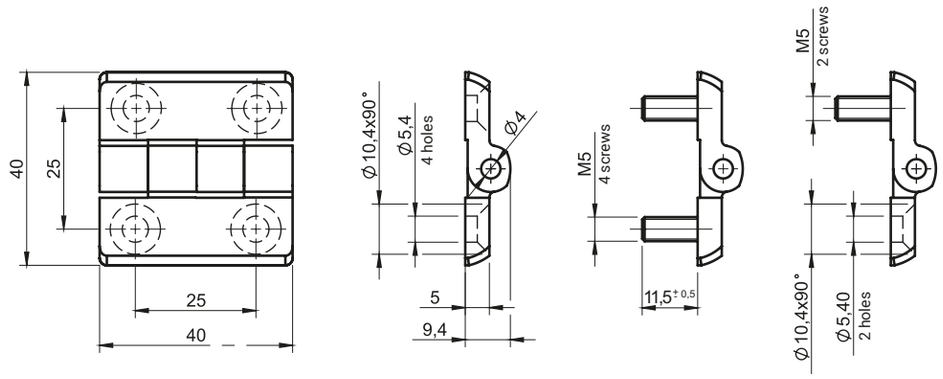

CATALOGUE NUMBER	COMPONENTS	MATERIAL	FINISH [C]
			RAL 9005
3.ZN60.101	Holder, Base	Polyamide	07
3.ZN60.102	Pin	Stainless steel	-
3.ZN60.103	Screws	Steel zinc plated	-

NEW

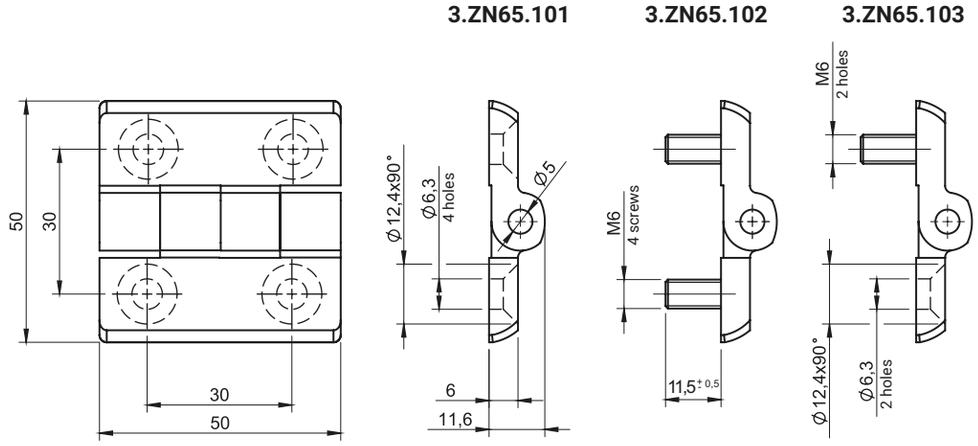

CATALOGUE NUMBER	COMPONENTS	MATERIAL	FINISH [C]
			RAL 9005
3.ZN65.101	Holder, Base	Polyamide	07
3.ZN65.102	Pin	Stainless steel	-
3.ZN65.103	Screws	Steel zinc plated	-

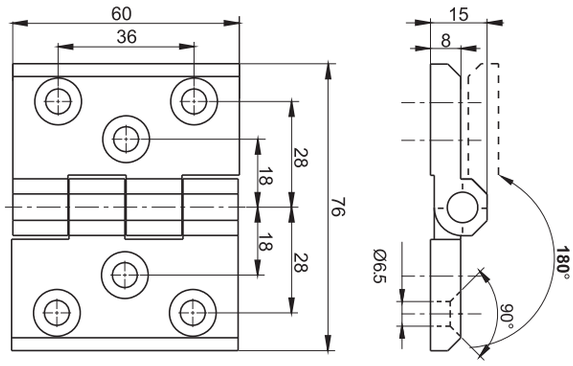

CATALOGUE NUMBER	COMPONENTS	MATERIAL	FINISH [C]		
			Chrome	RAL9005	RAL7035
3.ZN66.001	Holder, Base	ZAMAK 5	01	04	05
	Pin	Stainless steel			

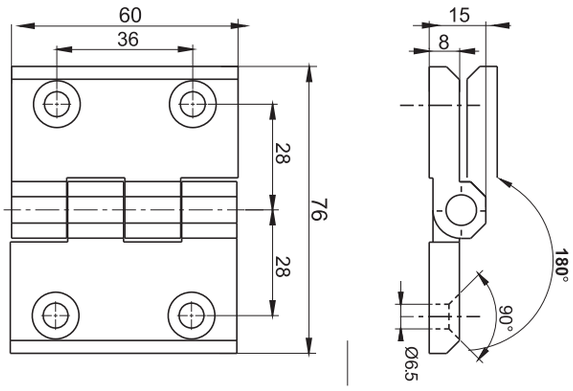

CATALOGUE NUMBER	COMPONENTS	MATERIAL	FINISH [C]		
			Chrome	RAL9005	RAL7035
3.ZN66.002	Holder, Base	ZAMAK 5	01	04	05
	Pin	Stainless steel			

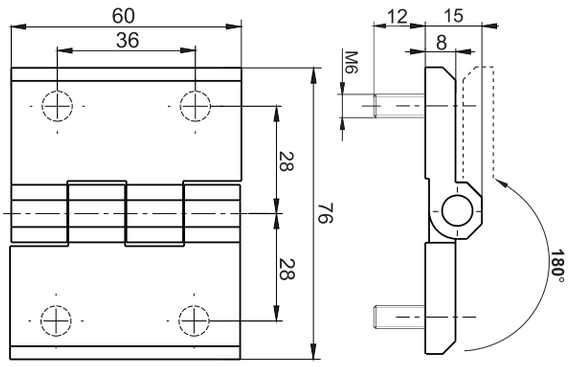

CATALOGUE NUMBER	COMPONENTS	MATERIAL	FINISH [C]	
			RAL9005	RAL7035
3.ZN66.003	Holder, Base	ZAMAK 5	04	05
	Screw	Steel zinc plated*		
	Pin	Stainless steel		

How to order: 3.ZN66.001 — C

Catalogue number

Finish

Hinge 3.512

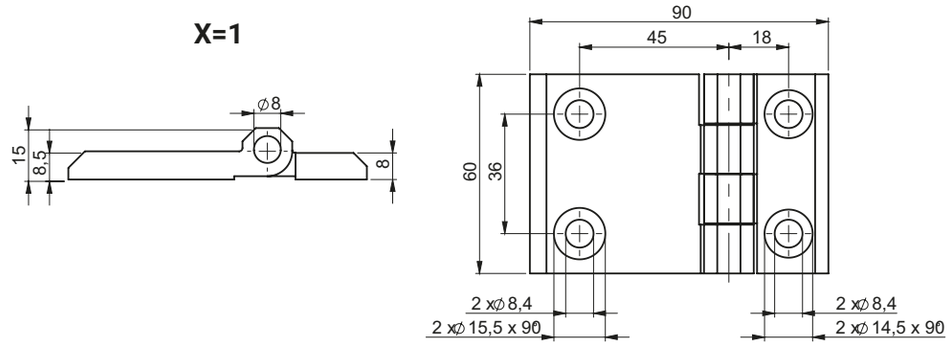

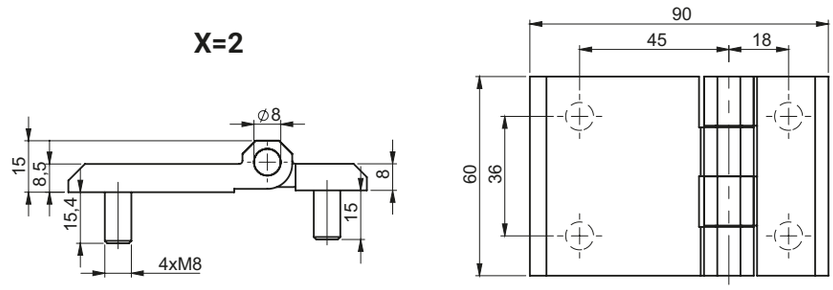

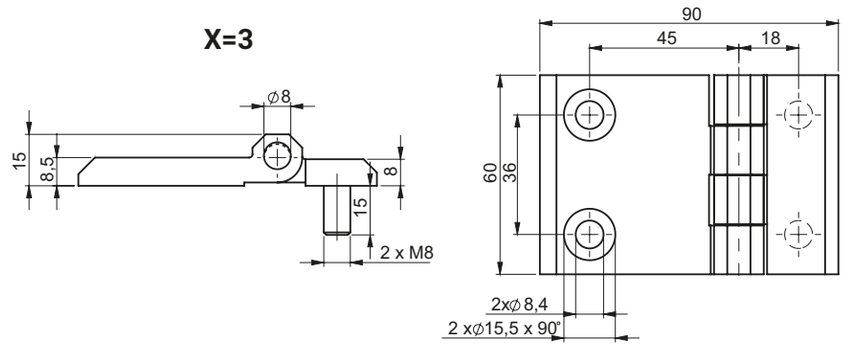

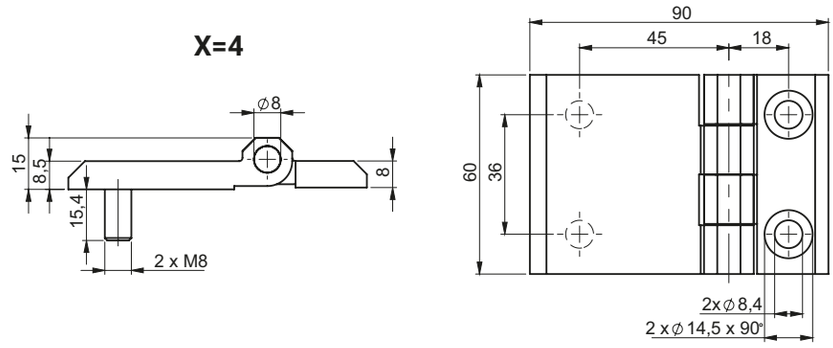

where:

X - the way of assembling the hinge
- 1 - version with 4 holes
- 2 - version with 4 threaded pins
- 3 - version with 2 holes and 2 threaded pins
- 4 - version with 2 threaded pins and 2 holes

Y - finish
- 1 - Chrome
- 2 - RAL 9005

HINGE	FINISH	
3.512.XY	11	12
	21	22
	31	32
	41	42

CATALOGUE NUMBER	COMPONENTS	MATERIAL
3.512.XY*	Holder, Base	ZAMAK 5
	Pin	Stainless steel

Hinge 3.513

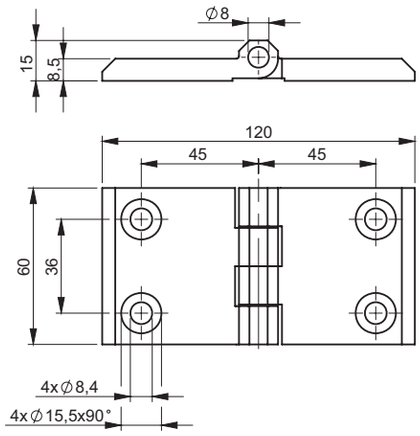

Use screws
M8 DIN965

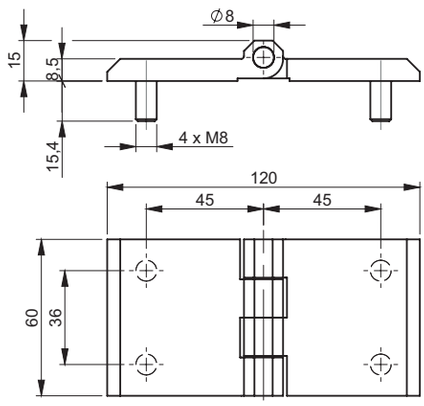

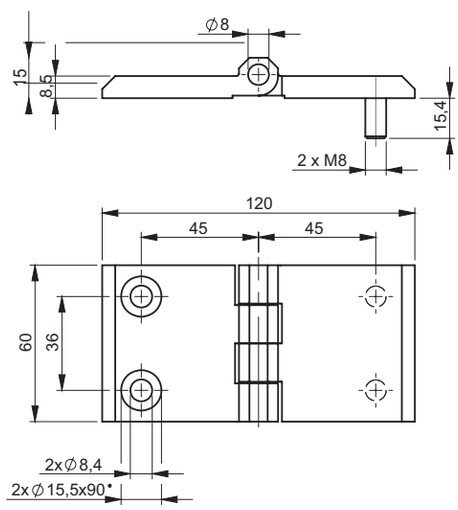

HINGE	FINISH	
3.513.XY	11	12
	21	22
	31	32

where:
X - the way of assembling the hinge
1 - version with 4 holes
2 - version with 4 threaded pins
3 - version with 2 holes and 2 threaded pins
Y - finish
1 - Chrome
2 - RAL 9005

CATALOGUE NUMBER	COMPONENTS	MATERIAL
3.513.XY	Holder, Base	ZAMAK 5
	Pin	Steel zinc plated

Hinge 3.541

ROZTOCZE

stainless steel

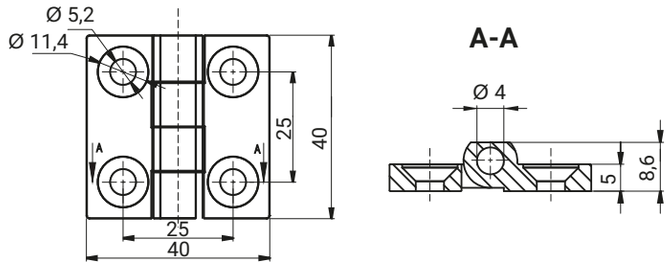

CATALOGUE NUMBER	COMPONENTS	MATERIAL	FINISH
3.541.001SN	Holder, Base	Stainless steel	Burnished

stainless steel

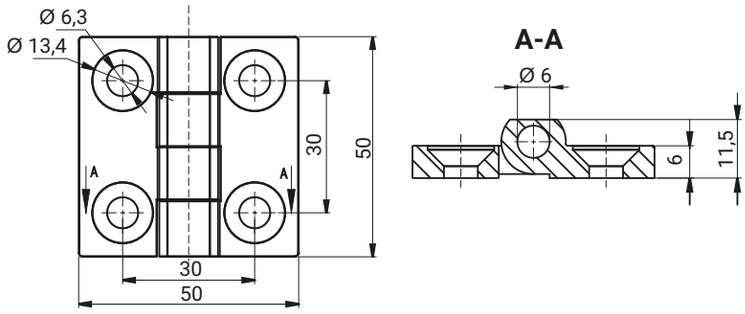

CATALOGUE NUMBER	COMPONENTS	MATERIAL	FINISH
3.541.002SN	Holder, Base	Stainless steel	Burnished

stainless steel

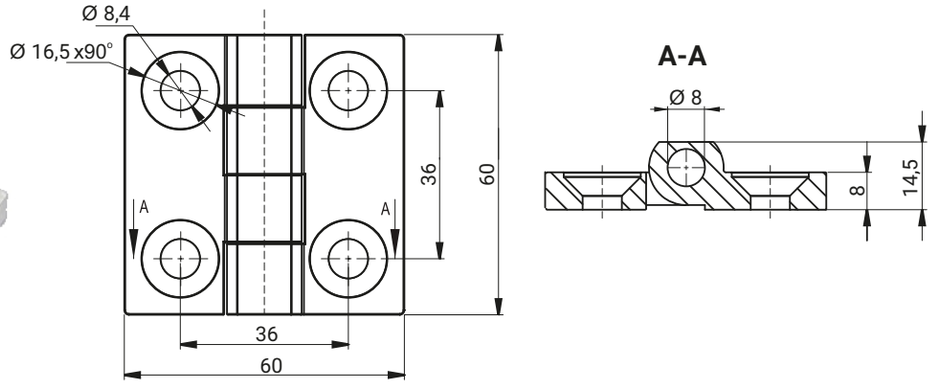

CATALOGUE NUMBER	COMPONENTS	MATERIAL	FINISH
3.541.003SN	Holder, Base	Stainless steel	Burnished

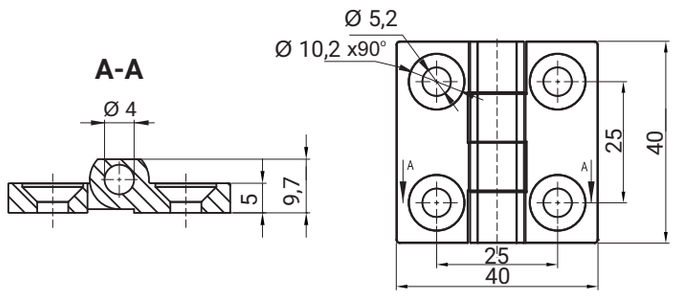

CATALOGUE NUMBER	COMPONENTS	MATERIAL	FINISH [C]
			RAL 9005
3.540.001SN	Holder, Base	Stainless steel	04

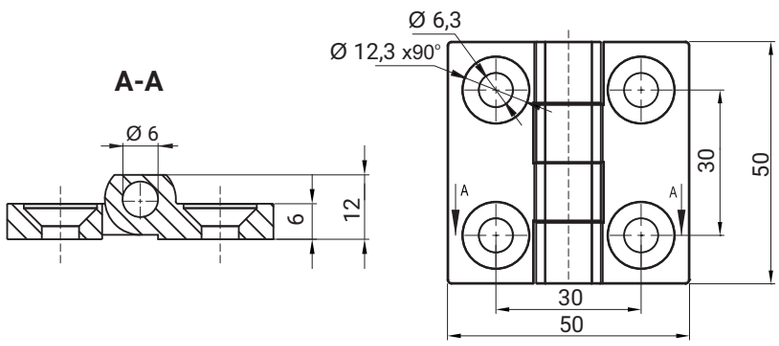

CATALOGUE NUMBER	COMPONENTS	MATERIAL	FINISH [C]
			RAL 9005
3.540.002SN	Holder, Base	Stainless steel	04

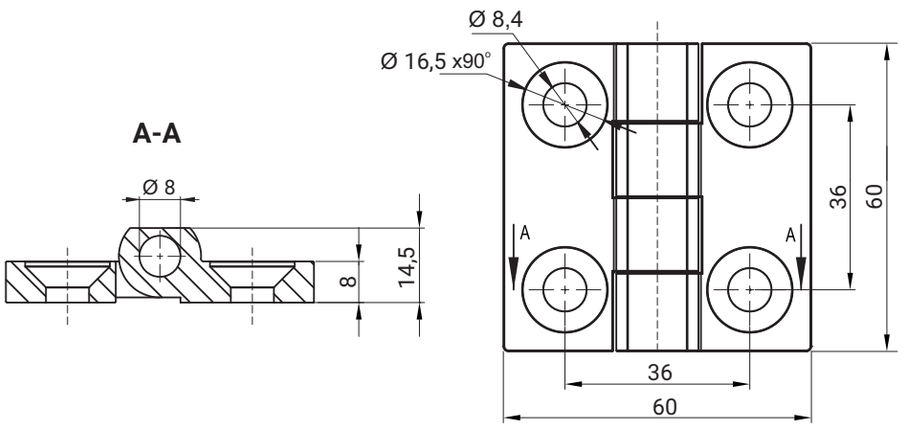

CATALOGUE NUMBER	COMPONENTS	MATERIAL	FINISH [C]
			RAL 9005
3.540.003SN	Holder, Base	Stainless steel	04

Hinge 3.ZN68, 3.ZN67

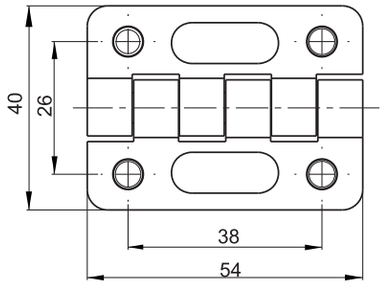

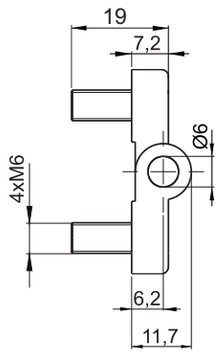

CATALOGUE NUMBER	COMPONENTS	MATERIAL	FINISH [C]
			RAL 9005
3.ZN68.001*	Holder, Base	ZAMAK 5	04
	Pin	Steel zinc plated	

VERSION LEFT
3.ZN67.002
3.ZN67.004

VERSION RIGHT
3.ZN67.001
3.ZN67.003

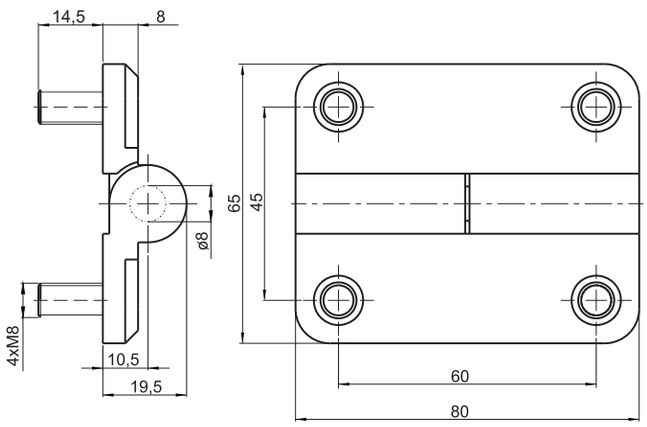

CATALOGUE NUMBER	COMPONENTS	MATERIAL	FINISH [C]	
			RAL 9005	RAL 7035
3.ZN67.001*	Holder, Base	ZAMAK 5	04	-
3.ZN67.002*	Pin	Steel zinc plated		
3.ZN67.003*	Holder, Base	ZAMAK 5	-	05
3.ZN67.004*	Pin	Steel zinc plated		

* possibility to order stainless steel pin.

How to order: 3.ZN67.001 — C

Catalogue number

Finish

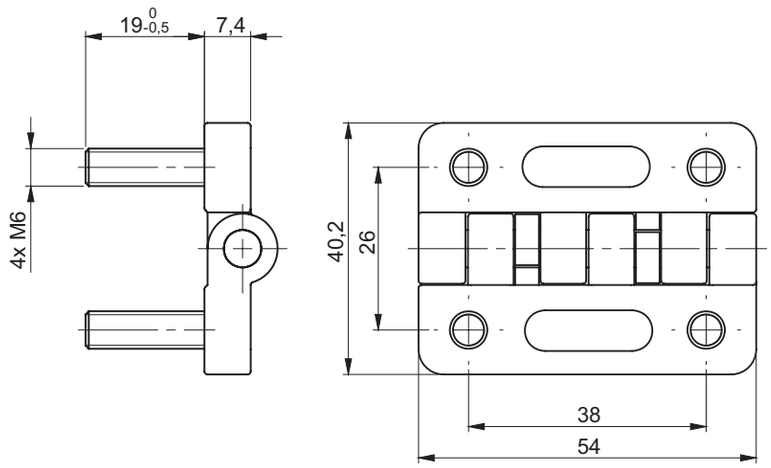

Type	Friction torque
3.543.001	47kg.cm ± 15%
3.543.002	12kg.cm ± 15%

CATALOGUE NUMBER	COMPONENTS	MATERIAL	FINISH [C]
			RAL 9005
3.543.001 **3.543.002**	Holder, Base	ZAMAK5	04
	Pin	Stainless steel	-

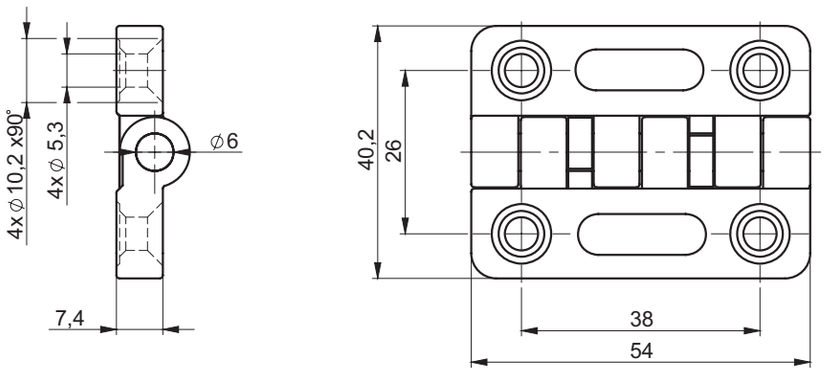

Type	Friction torque
3.543.101	47kg.cm ± 15%
3.543.102	12kg.cm ± 15%

CATALOGUE NUMBER	COMPONENTS	MATERIAL	FINISH [C]
			RAL 9005
3.543.101	Holder, Base	ZAMAK5	04
3.543.102	Holder, Base	ZAMAK5	04

Hinges with linear course of frictional resistance.

How to order: 3.543.001 — C

Catalogue number

Finish

Hinge 3.544, 3.545

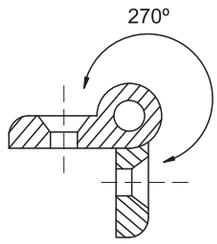

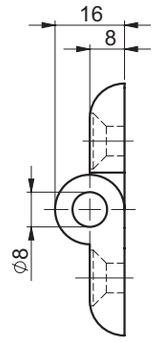

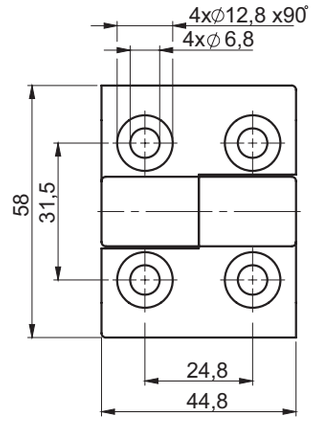

CATALOGUE \NUMBER	VERSION	COMPONENTS	MATERIAL	FINISH [C]
				RAL 9005
3.544.001	Right	Holder, Base	Polyamide	07
3.544.002	Left			-

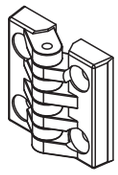

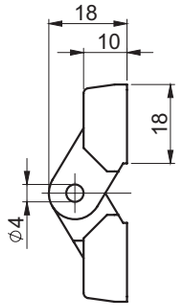

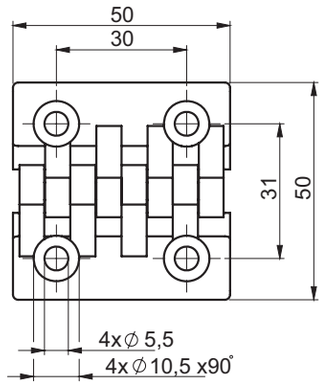

CATALOGUE NUMBER	COMPONENTS	MATERIAL	FINISH [C]
			RAL 9005
3.545.001	Holder, Base	Polyamide	07
	Pin	Steel zinc plated	-

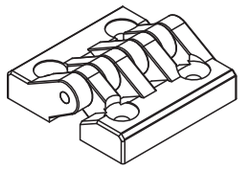

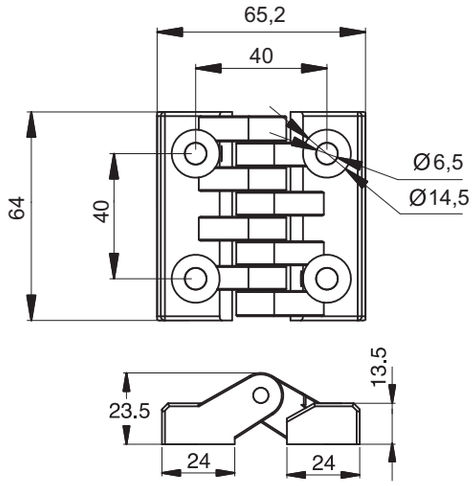

CATALOGUE NUMBER	COMPONENTS	MATERIAL	FINISH [C]
			RAL 9005
3.545.002	Holder, Base	Polyamide	07
	Pin	Steel zinc plated	-

How to order: 3.545.001 — C

Catalogue number

Finish

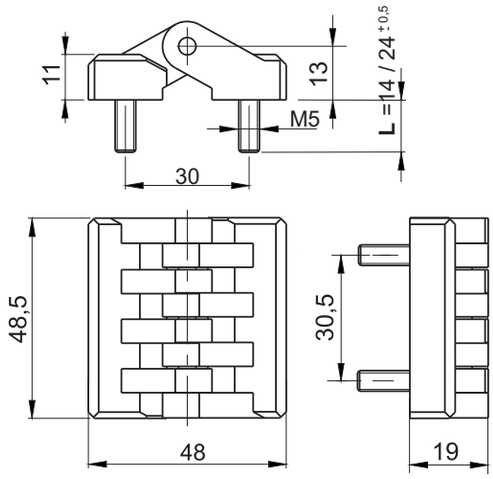

CAT. NUMBER	DIMENSION L	COMPONENTS	MATERIAL	FINISH [C]
				RAL 9005
3.ZN48-PA.001	**14**	Holder, Base	Polyamide Pa6	07
3.ZN48-PA.101	**24**	Pin, Studs	Steel zinc plated	
3.ZN48-PA.102 SN	**14**	Holder, Base	Polyamide Pa6	
3.ZN48-PA.103 SN	**24**	Pin, Studs	Stainless steel	

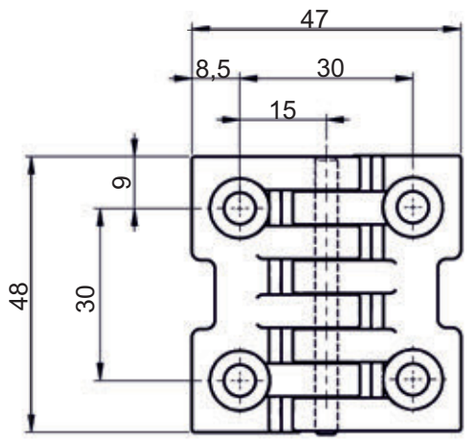

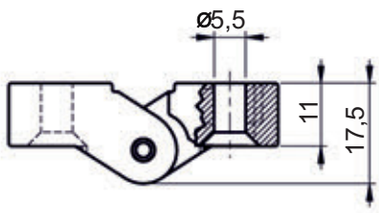

CATALOGUE NUMBER	COMPONENTS	MATERIAL	FINISH [C]	
			RAL9005	RAL7035
3.527.001	Holder, Base	Polyamide	07	08
	Pin	Steel zinc plated		

How to order: 3.526.001 — C

Catalogue number

Finish

Hinge 3.516, 3.526

3.516.001

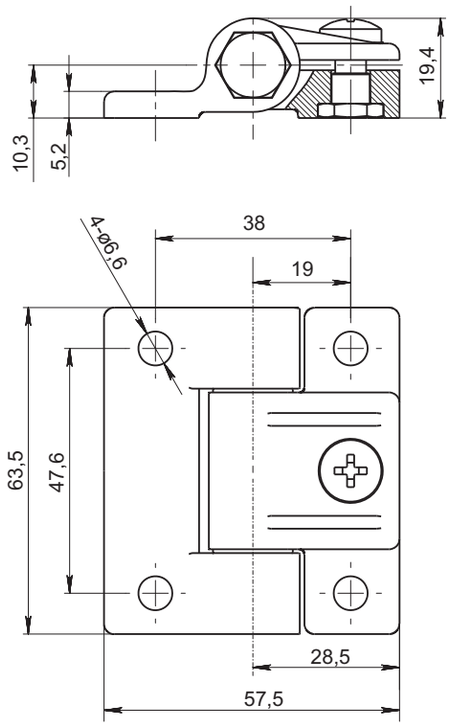

3.516.002

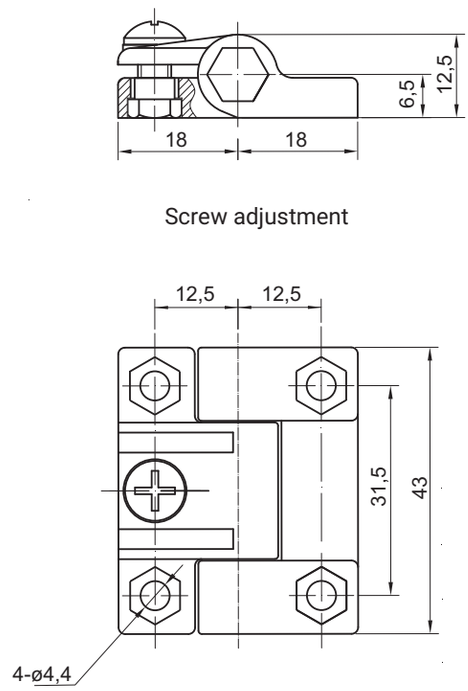

CATALOGUE NUMBER	COMPONENTS	MATERIAL	FINISH [C]
			RAL 9005
3.516.001 3.516.002	Holder, Base	Polyamide	07
	Pin	Steel zinc plated	-

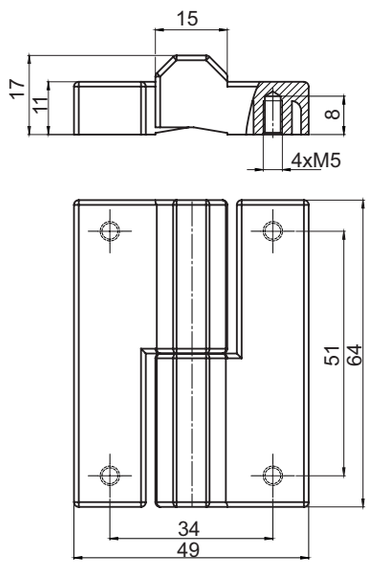

CATALOGUE NUMBER	VERSION	COMPONENTS	MATERIAL	FINISH [C]		
				Chrome	RAL9005	RAL7035
3.526.001	RIGHTS	Holder, Base	ZAMAK 5	01	04	05
3.526.002	LEFT	Pin	Steel zinc plated			

How to order:

3.526.001 — C

Catalogue number

Finish

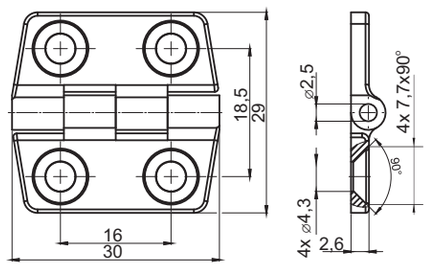

CATALOGUE NO.	COMPONENTS	MATERIAL	FINISH [C]
			RAL 9005
3.ZN10.001	Holder, Base,	ZAMAK5	04
	Pin	Steel zinc plated	

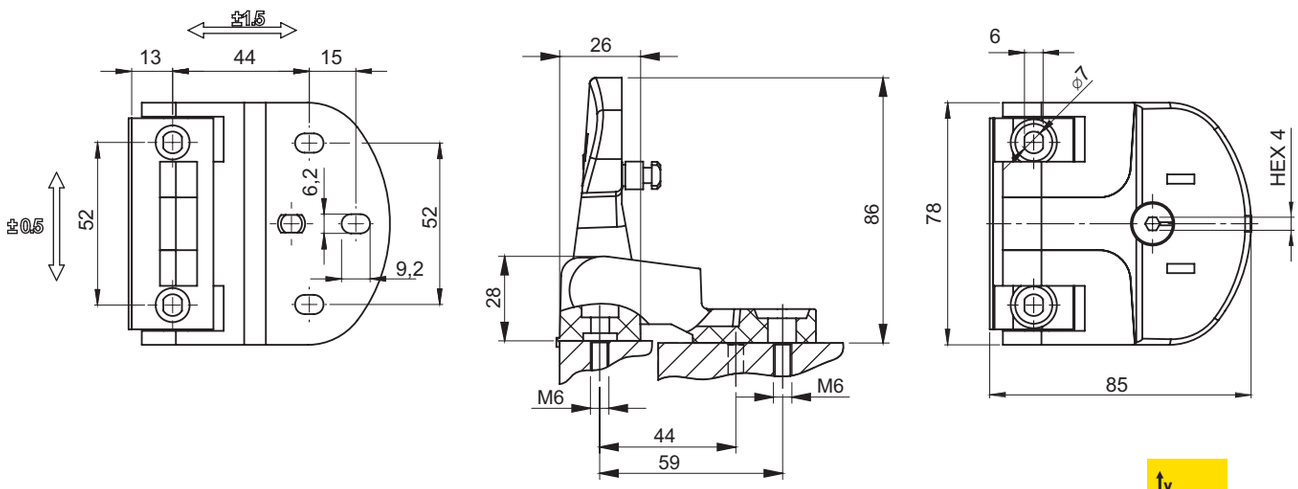

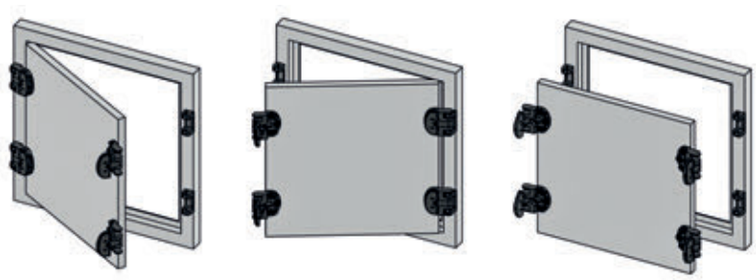

Opening the left

Opening the right

Removing the door

CATALOGUE NO.	DETAIL	MATERIAL	FINISH [C]
			RAL 9005
3.ZN200.001	Hinge with lock function	Polyamide	07

How to order: 3.ZN10.001 — C

Catalogue number

Finish

Hinge 3.ZN105

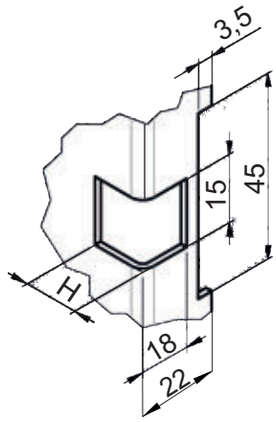

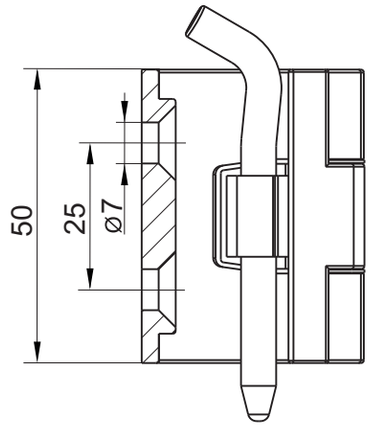

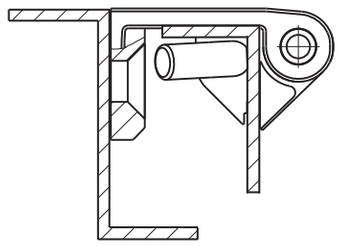

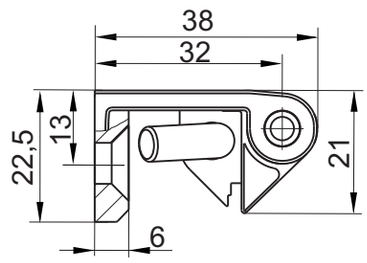

H [mm]	APPLICATION
13	only sheets 1,5 mm
15	only sheets 2 mm

CATALOGUE NUMBER	COMPONENTS	MATERIAL	FINISH [C]		
			Chrome	RAL 9005	RAL 7035
3.ZN105.001*	Holder, Base	ZAMAK 5	01	04	05
	Pin	Steel zinc plated			

* possibility to order stainless steel pin.
When ordering, specify the color or finishing type

How to order: 3.ZN105.001 — C

Catalogue number

Finish

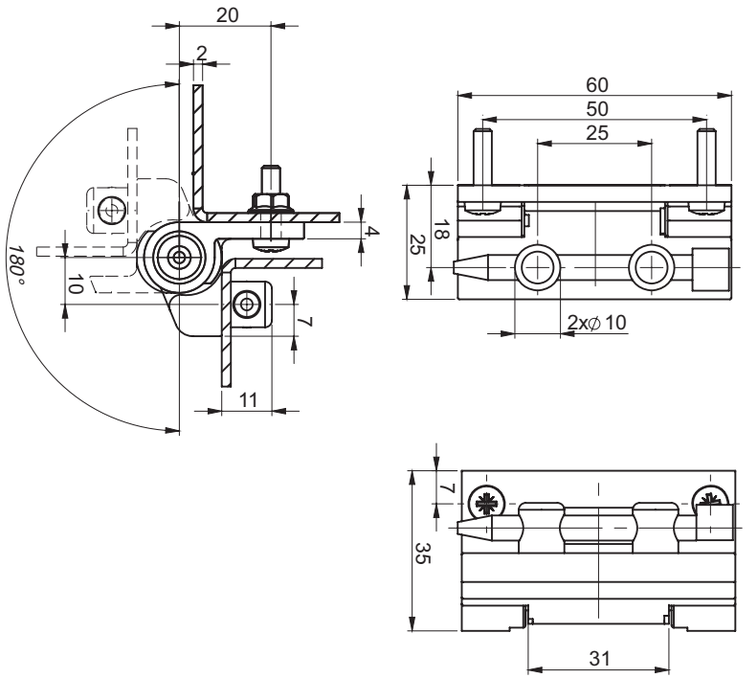

CATALOGUE NUMBER	COMPONENTS	MATERIAL	FINISH [C]	
			Chrome	RAL 9005
3.529.001*	Holder, Base	ZAMAK 5	01	04
	Pin	Steel zinc plated,*		

* possible to order stainless steel pin.

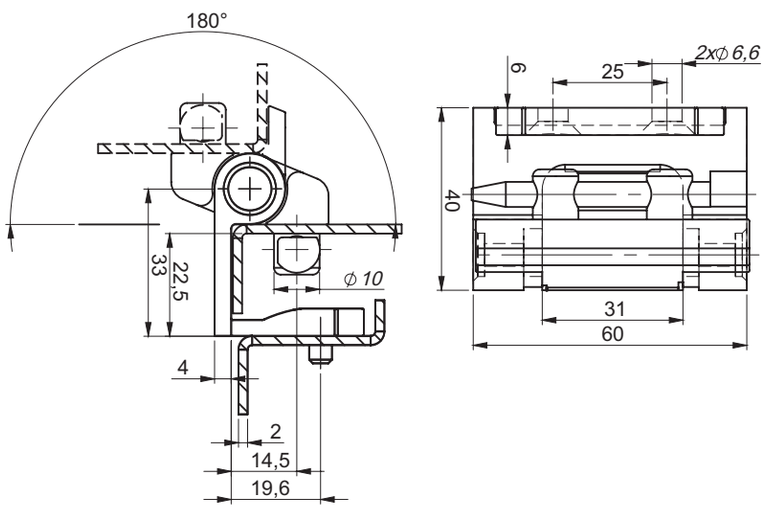

CATALOGUE NUMBER	COMPONENTS	MATERIAL	FINISH [C]	
			Chrome	RAL 9005
3.530.001**	Holder, Base	ZAMAK 5	01	04
	Pin	Steel zinc plated		

** possible to order polyamide pin.

How to order:

3.530.001 — C

Catalogue number

Finish

Hinge 3.530.002

NEW

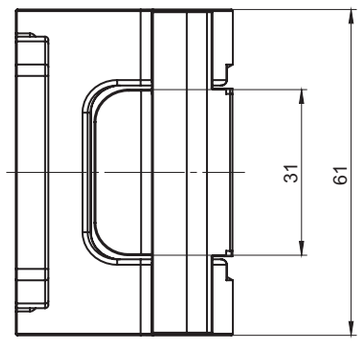

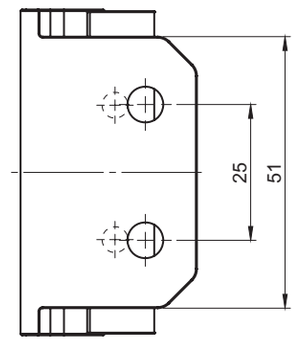

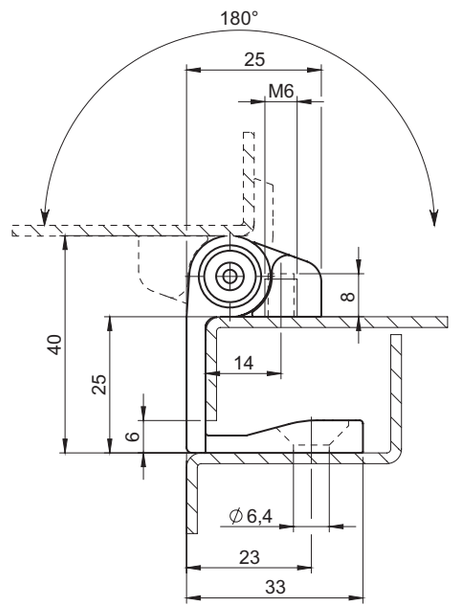

CATALOGUE NUMBER	COMPONENTS	MATERIAL	FINISH [C]	
			Chrome	RAL 9005
3.530.002	Holder, Base	ZAMAK	01	04
	Pin	Polyamide	-	-

How to order:
Catalogue number
Finish [C]

2.530.002 — **01**

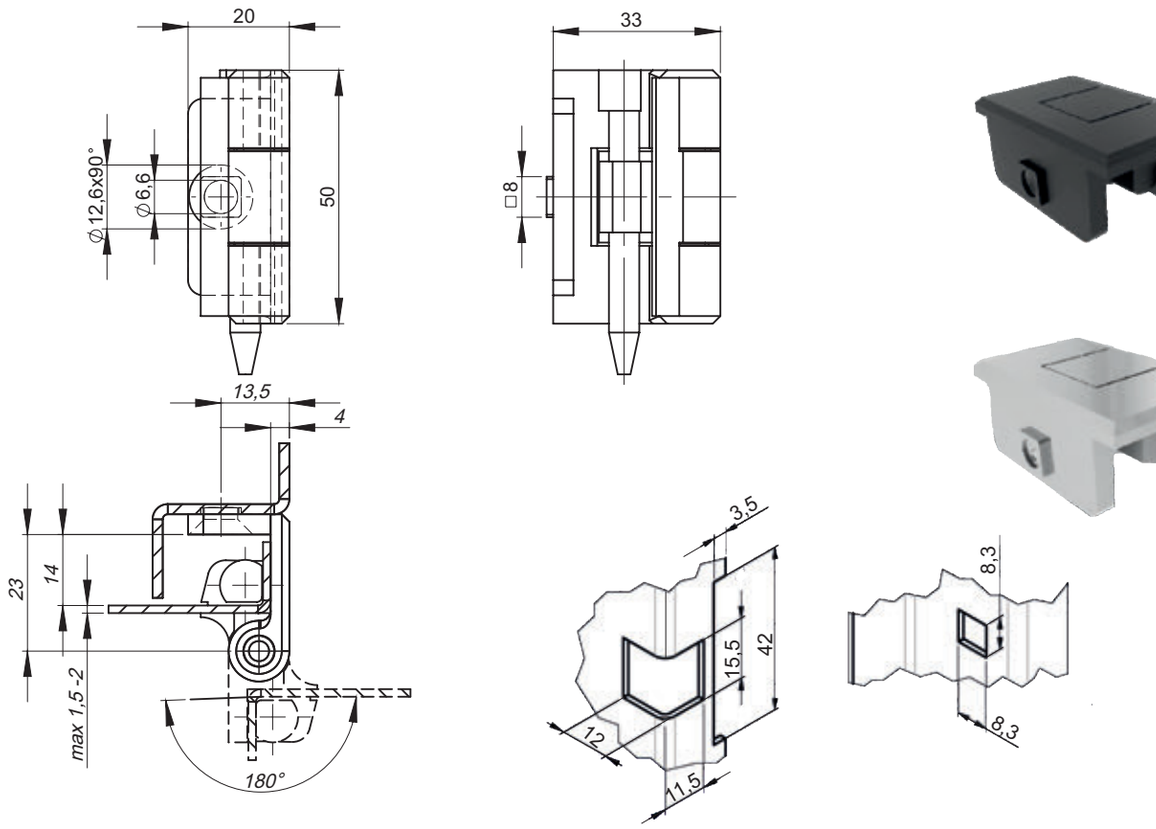

CATALOGUE NUMBER	COMPONENTS	MATERIAL	FINISH [C]	
			Chrome	RAL 9005
3.532.001*	Holder, Base	ZAMAK 5	01	04
	Pin	Steel zinc plated		

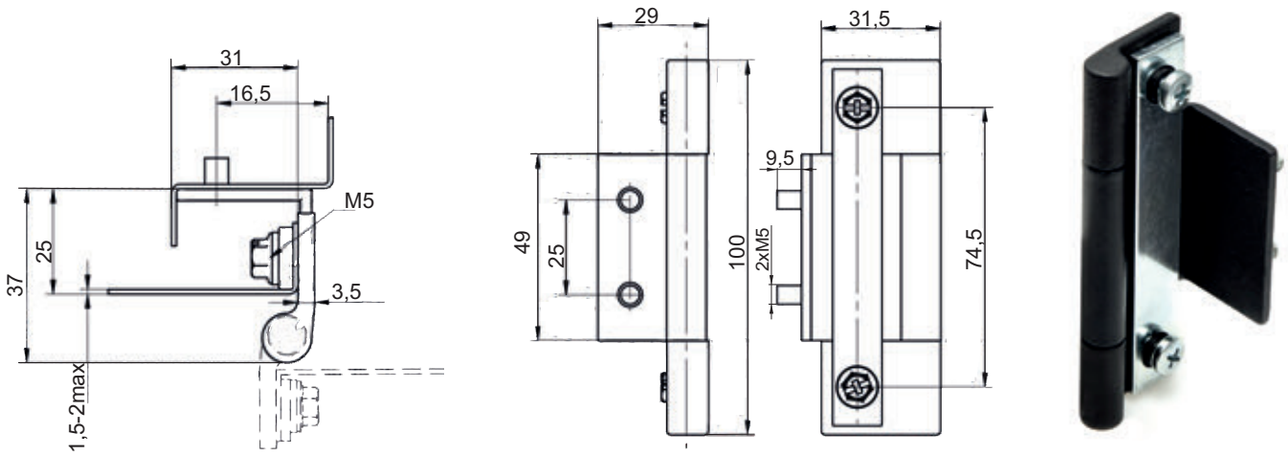

CATALOGUE NUMBER	COMPONENTS	MATERIAL	FINISH [C]	
			Chrome	RAL 9005
3.536.001	Holder	ZAMAK 5	01	04
	Base	Steel zinc plated		

* possibility to order with polyamide pin

How to order: 3.532.001 — C

Catalogue number

Finish

Hinge 3.ZN120

3.ZN120.001

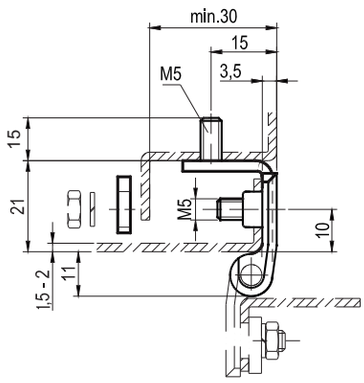

3.ZN120.002

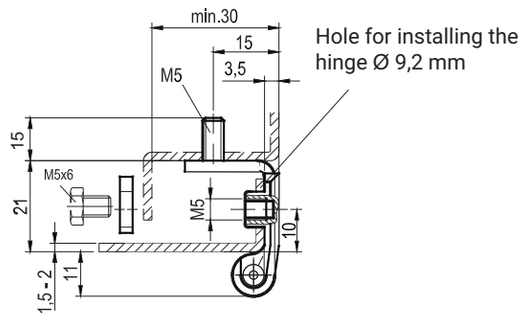

3.ZN120.005

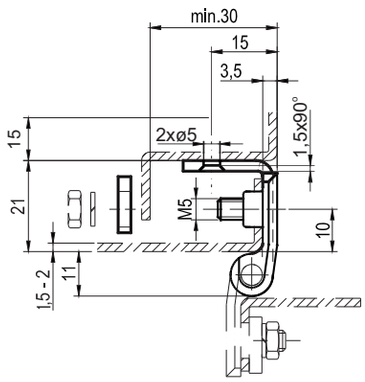

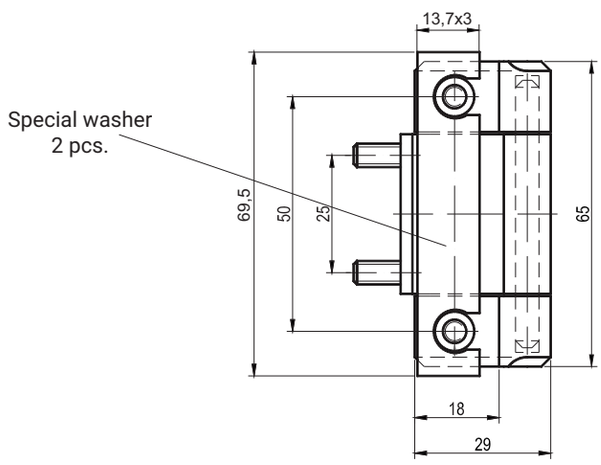

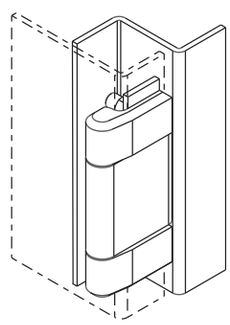

Note:
When using the hinge to sheet a thickness of 1 mm, should order special washer having a thickness of 1 mm

CAT. NUMBER	VERSION	COMPONENTS	MATERIAL	FINISH [C]	
				RAL 9005	RAL 7035
3.ZN120.001	Stud M5	Holder	ZAMAK 5	04	05
3.ZN120.002	Hole M5	Pin, Base	Steel zinc plated		
3.ZN120.005	Hole M5	Pin, Base	Steel zinc plated		

When ordering, specify the color or finishing type

Hinge 3.ZN130

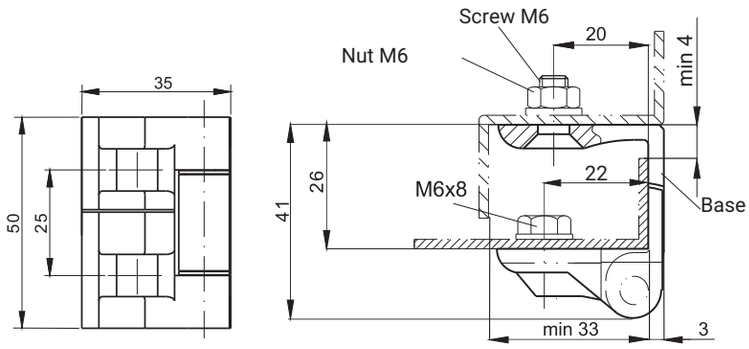

CATALOGUE NUMBER	COMPONENTS	MATERIAL	FINISH [C]	
			RAL 9005	RAL 7035
3.ZN130.001	Holder	ZAMAK 5	04	05
	Base	ZAMAK 5		
	Pin	Steel zinc plated		

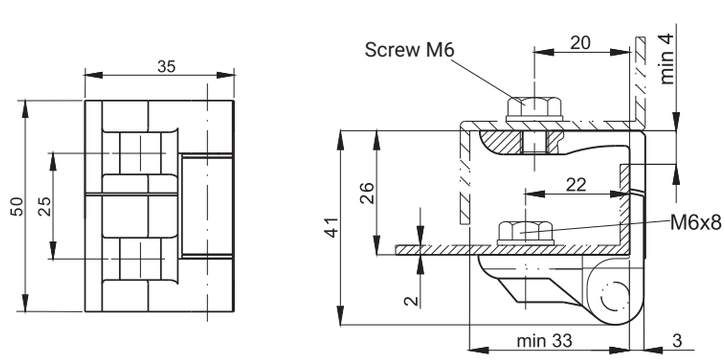

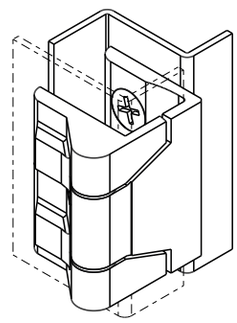

CATALOGUE NUMBER	COMPONENTS	MATERIAL	FINISH [C]	
			RAL 9005	RAL 7035
3.ZN130.002/M6	Holder	ZAMAK 5	04	05
	Base	ZAMAK 5		
	Pin	Steel zinc plated		

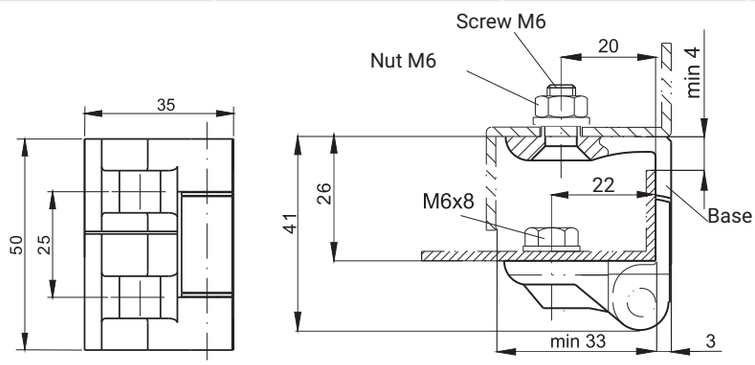

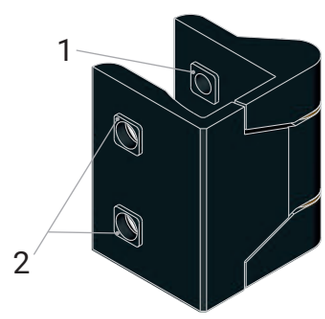

1. Holder with shoulder □8x1mm in standard version
2. Base with shoulder □8x1mm in version 3.ZN130.003

CATALOGUE NUMBER	COMPONENTS	MATERIAL	FINISH [C]	
			RAL 9005	RAL 7035
3.ZN130.003	Holder	ZAMAK 5	04	05
	Base	ZAMAK 5		
	Pin	Steel zinc plated		

How to order: 3.ZN130.001 — C

Catalogue number

Finish

Hinge 3.ZN140

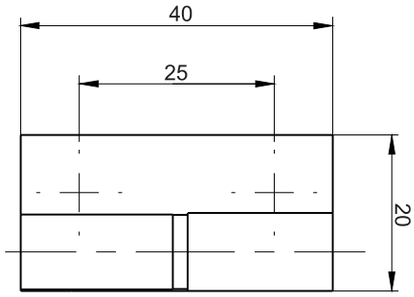

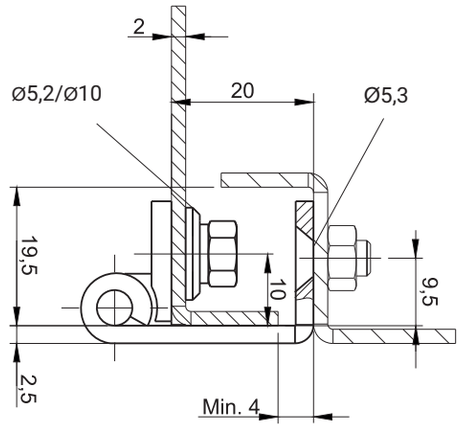

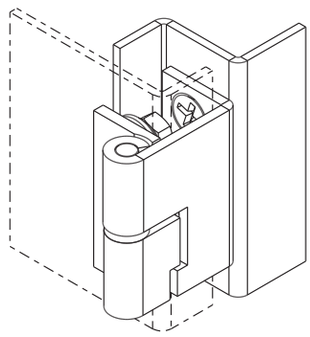

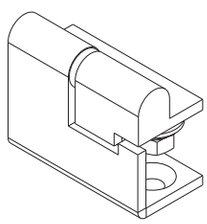

3.ZN140.001
RIGHT VERSION

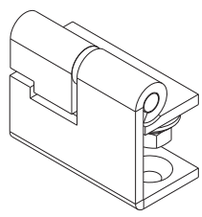

3.ZN140.002
LEFT VERSION

CATALOGUE NUMBER	COMPONENTS	MATERIAL	FINISH [C]	
			RAL 9005	RAL 7035
3.ZN140.001	Holder	Brass	04	05
	Base	Steel zinc plated		
	Pin	Steel zinc plated		
3.ZN140.001SN	Holder, Base, Pin	Stainless steel	-	-
3.ZN140.002	Holder	Brass	04	05
	Base	Steel zinc plated		
	Pin	Steel zinc plated		
3.ZN140.002SN	Holder, Base, Pin	Stainless steel	-	-

How to order: 3.ZN140.001 — C
Catalogue number
Finish

NEW

180°

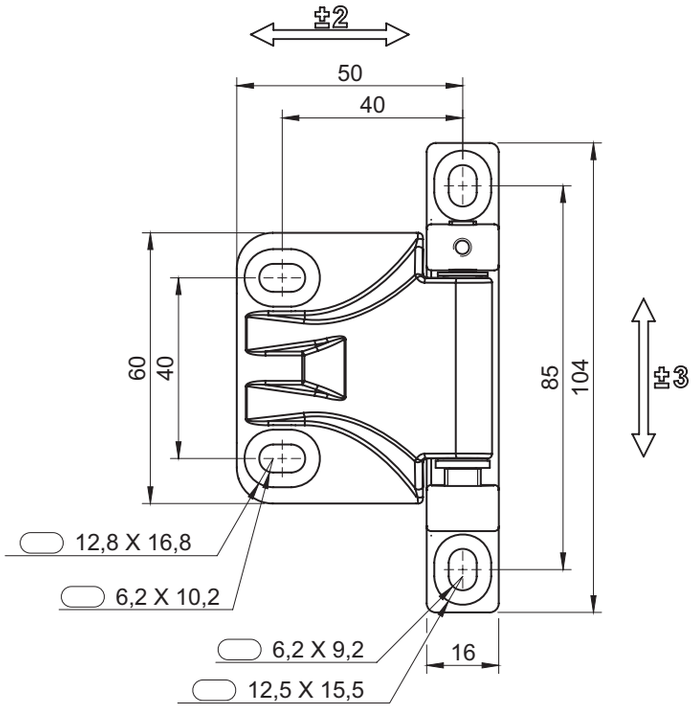

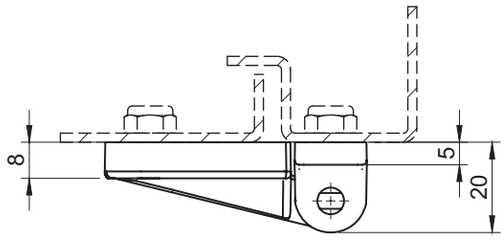

CATALOGUE NUMBER	COMPONENTS	MATERIAL	FINISH [C]
			RAL 9005
3.ZN210.003	Holder, Base	ZAMAK	04
	Pin	Stainless steel	-

Hinge 3.ZN210.001

180°

NEW

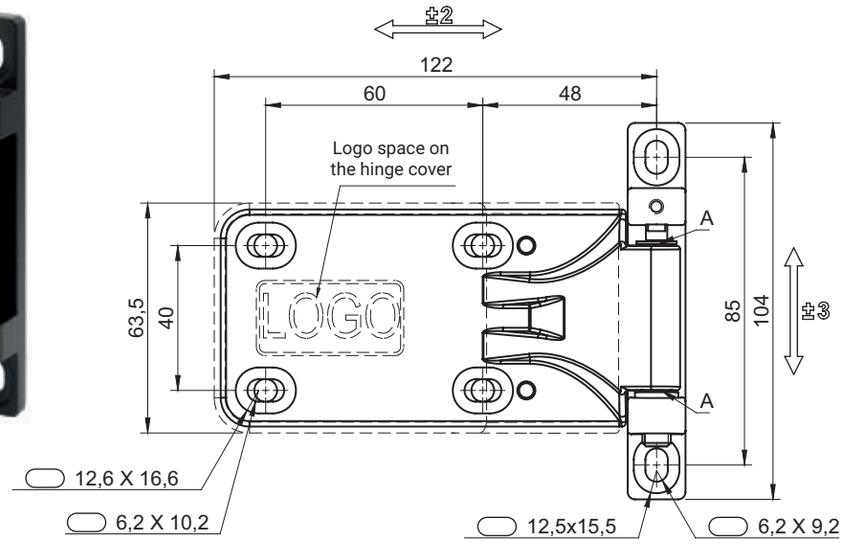

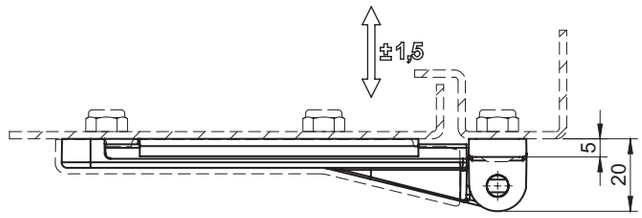

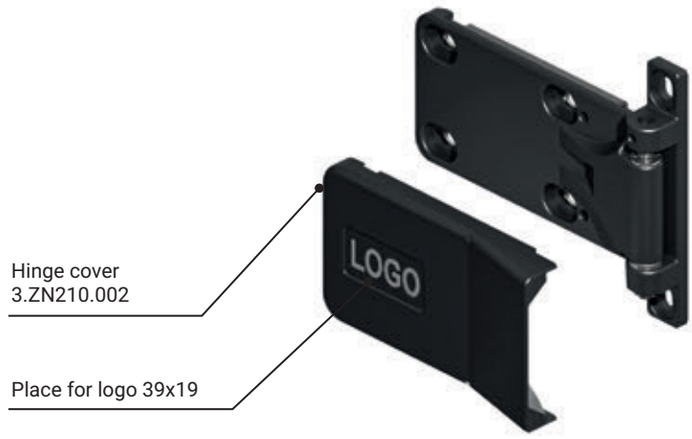

A - axis of the hinge with plastic sleeves.

The hinge position can be adjusted in three axes - the adjustment ranges are shown in the drawing.

Hinge cover 3.ZN210.002 to be ordered separately.

CATALOGUE NUMBER	COMPONENTS	MATERIAL	FINISH [C]
			RAL 9005
3.ZN210.001	Holder, Base	ZAMAK	04
	Pin	Stainless steel	-
3.ZN210.002	Hinge cover	Polyamide	07

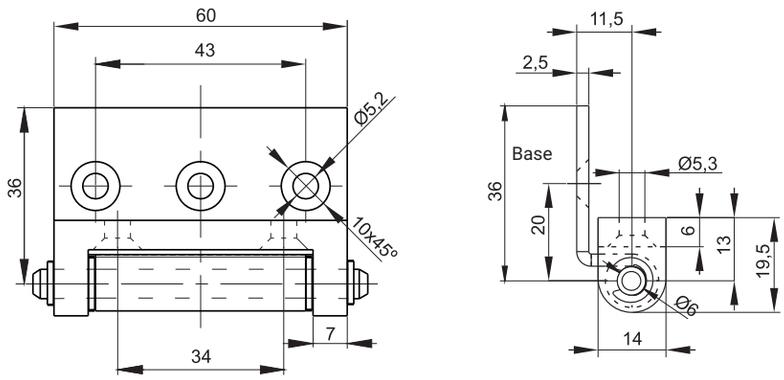

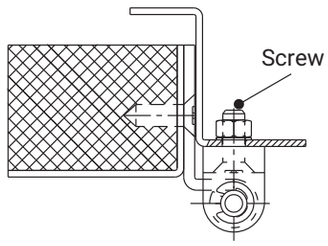

CATALOGUE NUMBER	COMPONENTS	MATERIAL
3.ST42.001	Holder	Steel zinc plated
	Base	ZAMAK 5
	Pin	Steel zinc plated

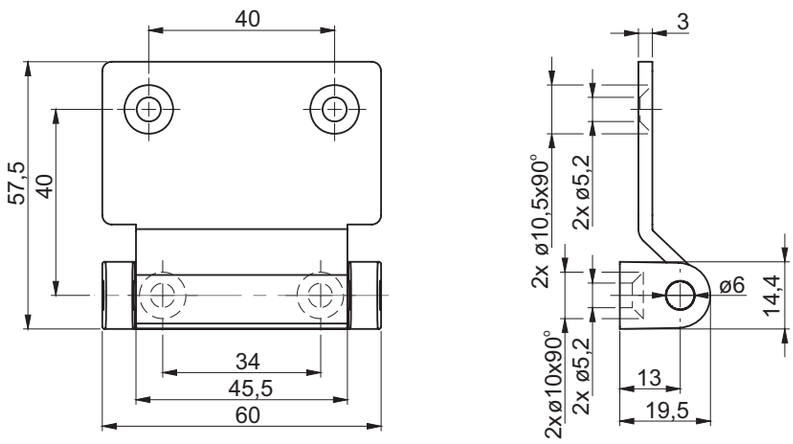

Note:
The hinge supplied as separate parts, handle with foot joint by pushing the pin after mounting the handle.

CATALOGUE NUMBER	COMPONENTS	MATERIAL	FINISH [C]
			RAL 9005
3.ST42.005	Holder	Steel zinc plated	04
	Base	ZAMAK5	
	Pin	Stainless steel	-
3.ST42.005SN	Holder	Stainless steel	04
	Base	ZAMAK5	
	Pin	Stainless steel	-

How to order: 3.ST42.005 — C

Catalogue number

Finish

Hinge 3.514, 3.519

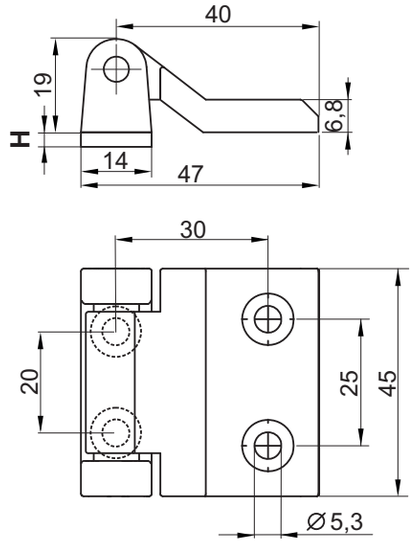

CATALOGUE NUMBER	COMPONENTS	MATERIAL	FINISH [C]	
			Chrome	RAL9005
3.514.C.X	Holder, Base	ZAMAK5	01	04
	Pin	Steel zinc plated	-	-

How to order : **3.514 . 04 . 05**
Hinge code
Finish
Height H

H [mm]	0	3	5	8	10	15
X	00	03	05	08	10	15

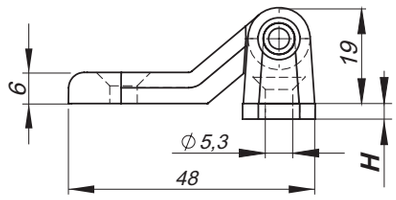

Height **H** adjusted by distance rings

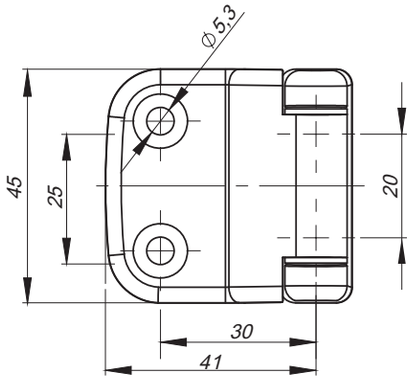

CATALOGUE NUMBER	COMPONENTS	MATERIAL	FINISH [C]	
			Chrome	RAL9005
3.519.C.X	Holder, Base	ZAMAK5	01	04
	Pin	Stainless steel	-	-
	Sleeve	POM	-	-

How to order : **3.519 . 04 . 05**
Hinge code
Finish
Height H

H [mm]	0	3	5	8	10	15
X	00	03	05	08	10	15

3.531.001

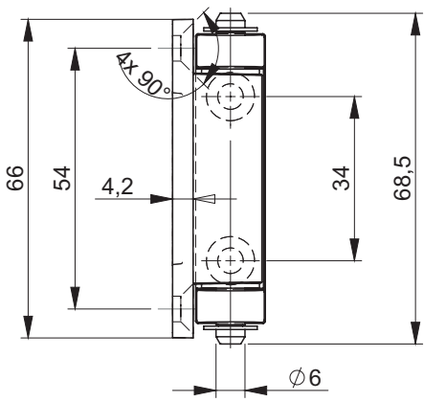

Insert fastening
Collecting plate

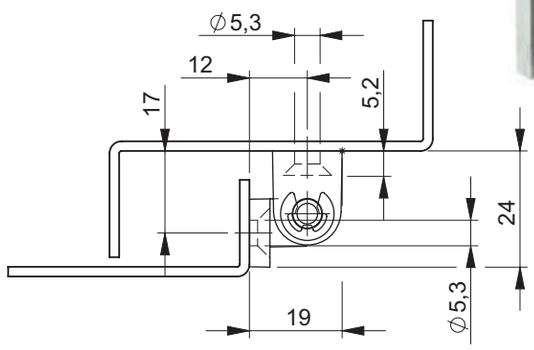

3.531.002

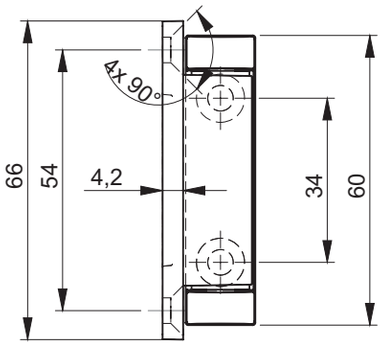

Insert fastening
Knurled

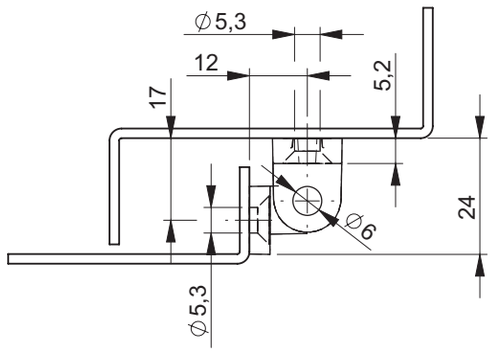

CATALOGUE NUMBER	COMPONENTS	MATERIAL	FINISH [C]	
			Chrome	RAL9005
3.531.001 **3.531.002**	Holder, Base	ZAMAK 5	01	04
	Pin	Steel zinc plated		

How to order: 3.531.001 — C

Catalogue number

Finish

Hinge 3.ST23, 3.535

stainless steel

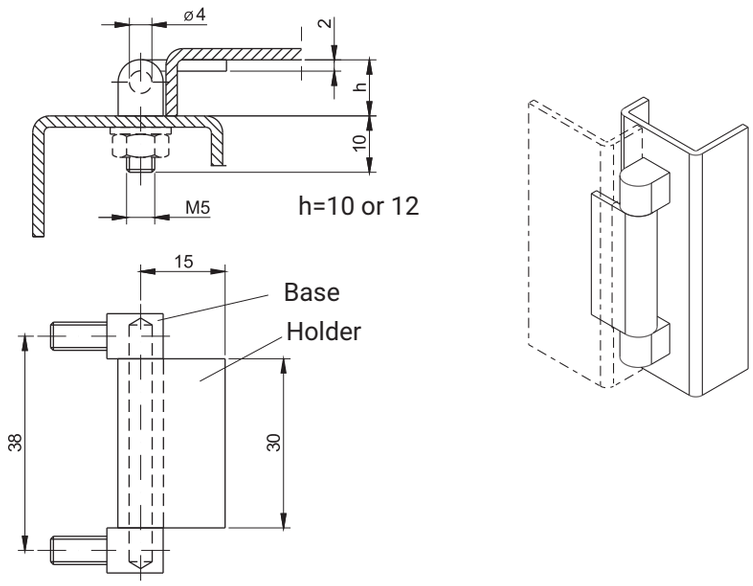

CATALOGUE NUMBER	COMPONENTS	MATERIAL
3.ST23.001	Holder	Steel zinc plated
	Base, Pin	Steel zinc plated
3.ST23.001SN	Holder	Stainless steel
	Base, Pin	Stainless steel

x

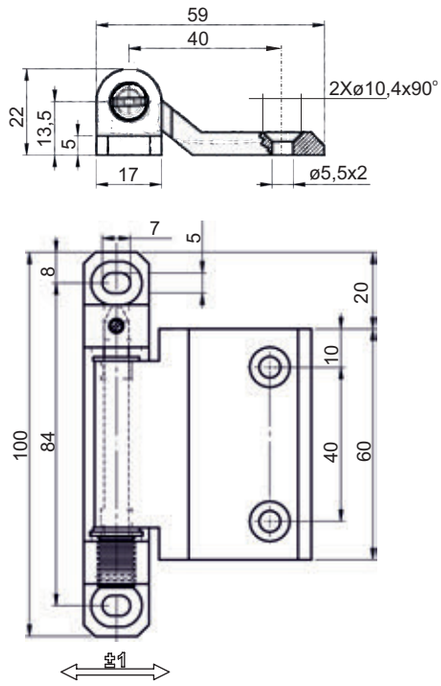

CATALOGUE NUMBER	COMPONENTS	MATERIAL	FINISH [C]	
			Chrome	RAL 9005
3.535.001	Holder	ZAMAK 5	01	04
	Base	ZAMAK 5		

How to order: 3.535.001 — C

Catalogue number

Finish

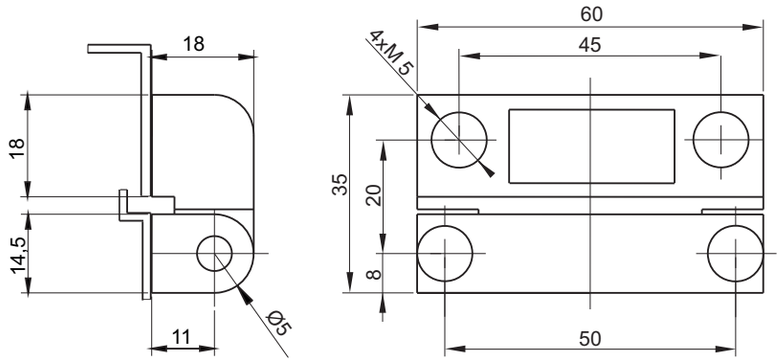

CATALOGUE NUMBER	COMPONENTS	MATERIAL	FINISH [C]
			RAL9005
3.517.001	Holder, Base	ZAMAK 5	04
	Pin	Steel zinc plated	-

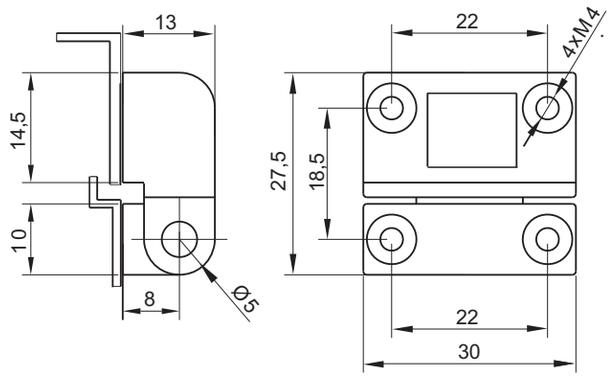

CATALOGUE NUMBER	COMPONENTS	MATERIAL	FINISH [C]	
			Nickel	RAL9005
3.517.002	Holder, Base	ZAMAK 5	02	04
	Pin	Steel zinc plated	-	-

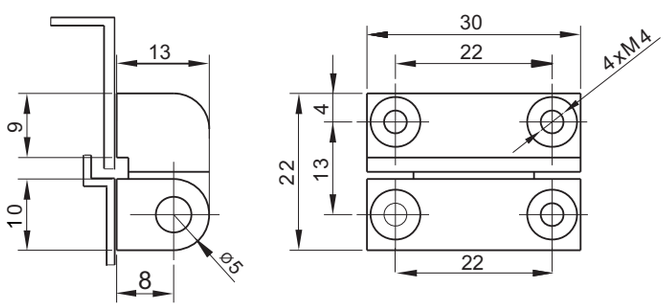

CATALOGUE NUMBER	COMPONENTS	MATERIAL	FINISH [C]	
			Nickel	RAL9005
3.517.003	Holder, Base	ZAMAK 5	02	04
	Pin	Steel zinc plated	-	-

How to order: 3.517.001 — C

Catalogue number

Finish

Hinge 3.518

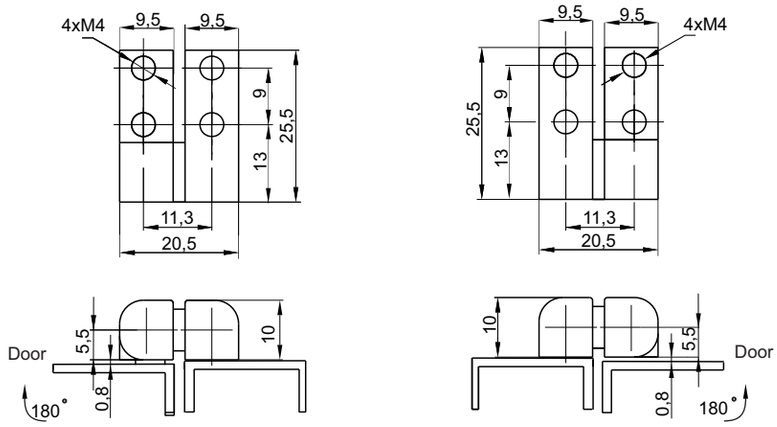

LEFT VERSION RIGHT VERSION

CATALOGUE NUMBER	COMPONENTS	MATERIAL	FINISH [C]
			RAL 9005
3.518.001	Holder, Base	ZAMAK 5	04
	Pin	Steel zinc plated	

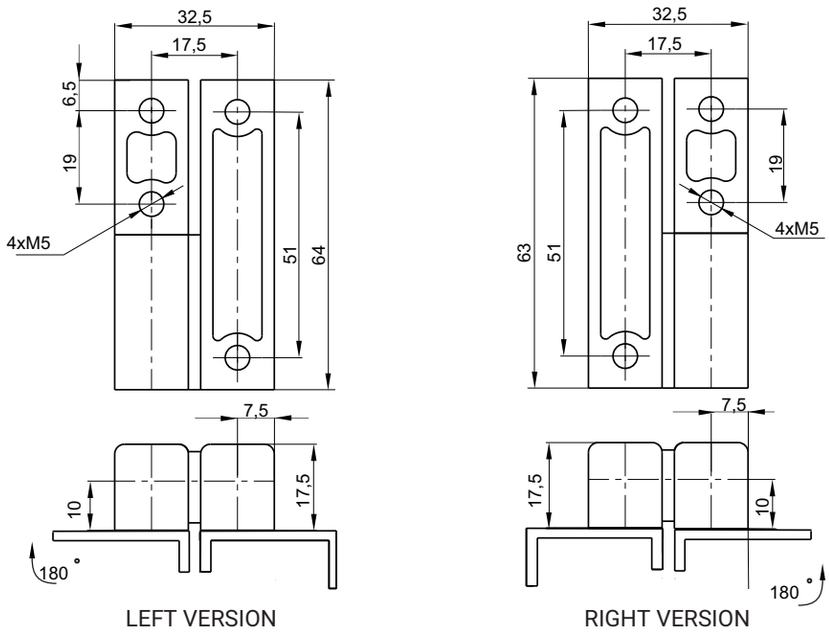

LEFT VERSION RIGHT VERSION

CATALOGUE NUMBER	COMPONENTS	MATERIAL	FINISH [C]
			RAL 9005
3.518.002	Holder, Base	ZAMAK 5	04
	Pin	Steel zinc plated	

How to order: 3.518.001.X — C

Catalogue number

Version X (L-left, R-right)

Finish

Fire door hinge 3.ST109.001

NEW

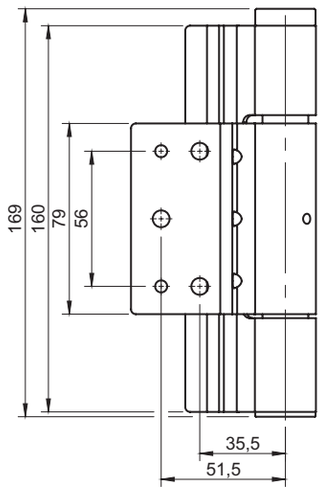

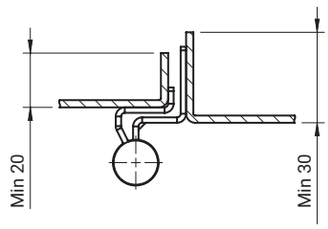

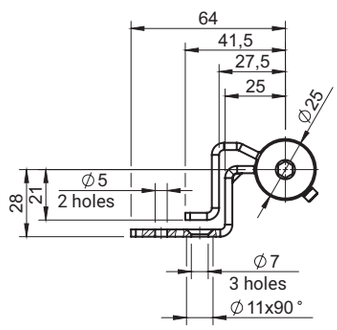

Closed position

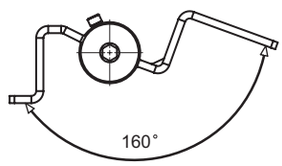

Open position

CATALOGUE NUMBER	VERSION	COMPONENTS	MATERIAL
3.ST109.001-A	Spring hinge	Holder, Base, Pin	Steel zinc plated
3.ST109.001-B	KO hinge		

where:

3.ST109.001-A - spring hinge causing self-locking

3.ST109.001-B - support hinge - without spring

Fire door hinge
3.ST109.003, 3.ST109.004

3.ST109.003-A
Right version

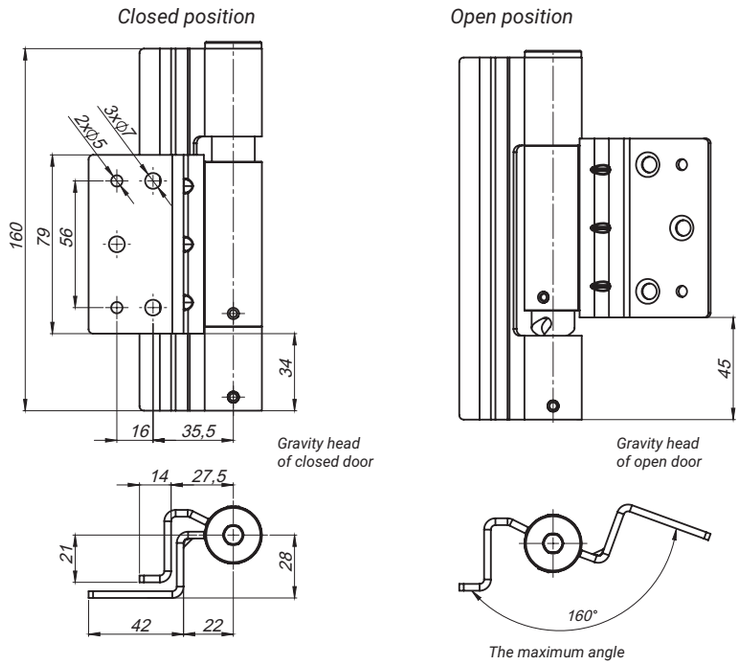

CATALOGUE NUMBER	VERSION	COMPONENTS	MATERIAL
3.ST109.003-A	Right	Handle, base	Steel zinc plated
3.ST109.003-B	Left		

Bearing hinge causes automatic door closure and lifting the door while opening.
The set of hinges is **3.ST109.003 + 3.ST109.004** or two hinges **3.ST109.003**
Left version is the mirror image of the right version.

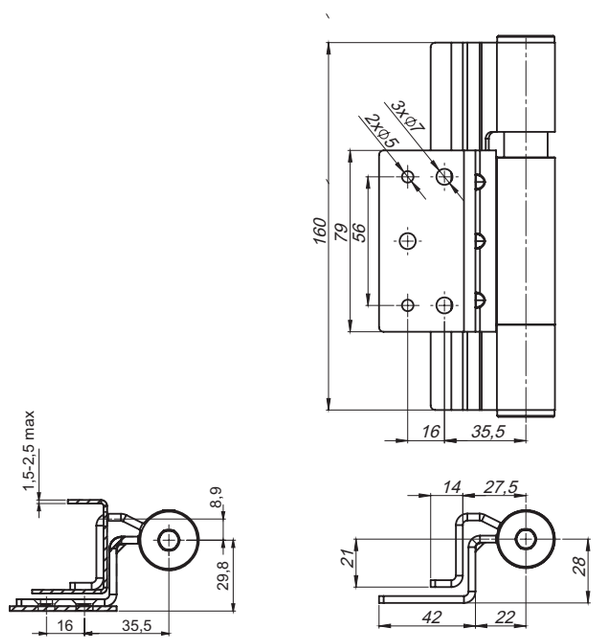

CATALOGUE NUMBER	COMPONENTS	MATERIAL
3.ST109.004	Handle, base	Steel zinc plated

The positioning hinge in door axis cooperates only with the hinge **3.ST109.003**

Fire door hinges with hight regulation on thread

3.ST109.007-B
Left version

3.ST109.007-A
Right version

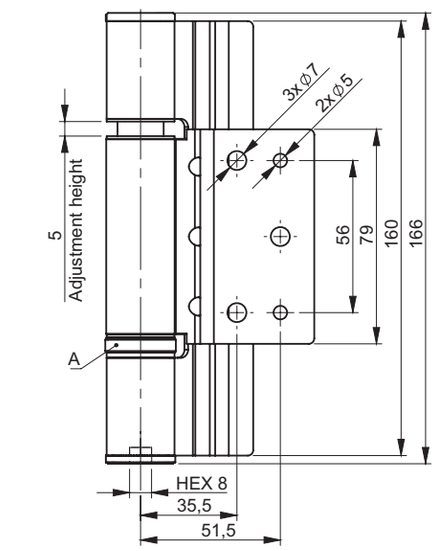

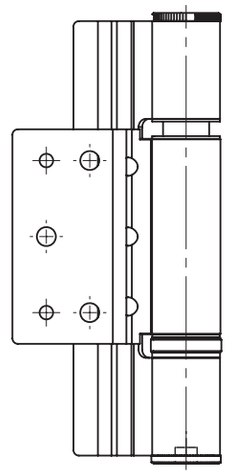

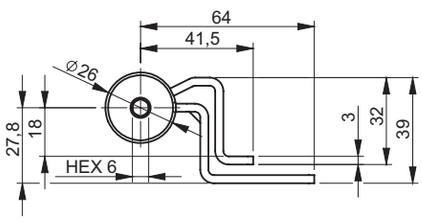

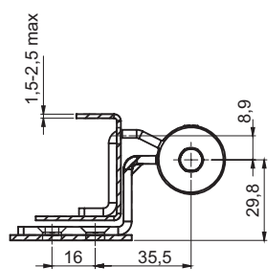

CATALOGUE NUMBER	VERSION	COMPONENTS	MATERIAL
3.ST109.007-A	Right	Holder, Base, Pin	Steel zinc plated
3.ST109.007-B	Left		

A - thrust bearing
Max. load: 80kg
Hinge welded to door frame and screwed into a door
Hinge 3.ST109.007 is compatible with spring hinge 3.ST109.001-A

Hinge 3.ST109.100, 3.ST109.101

3.ST109.100

3.ST109.100

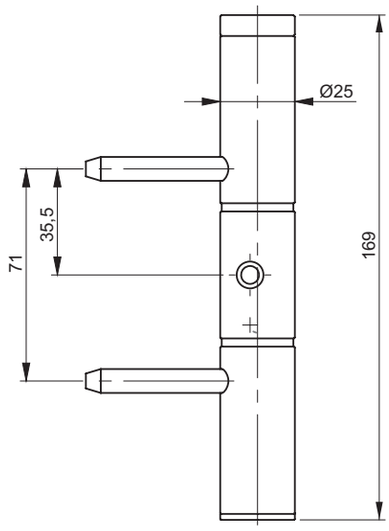

3.ST109.101

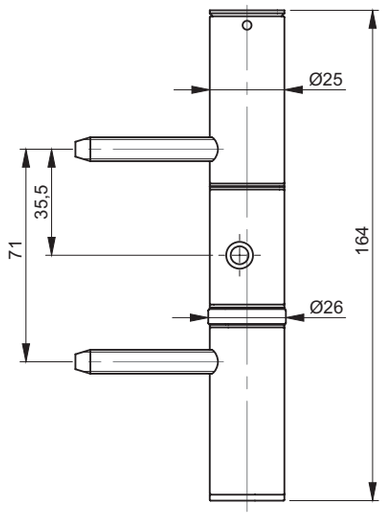

3.ST109.101

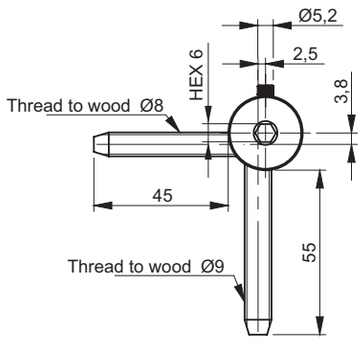

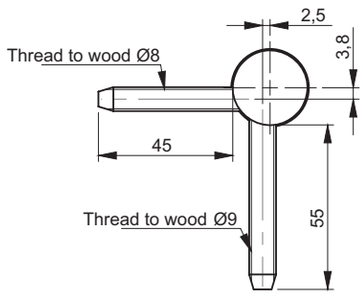

CATALOGUE NUMBER	DETAIL	COMPONENTS	MATERIAL
3.ST109.100	Spring hinge	Holder, Base	Steel zinc plated
3.ST109.101	KO hinge		

Fire door hinges with height regulation

3.ST109.009-B

Left version

3.ST109.009-A

Right version

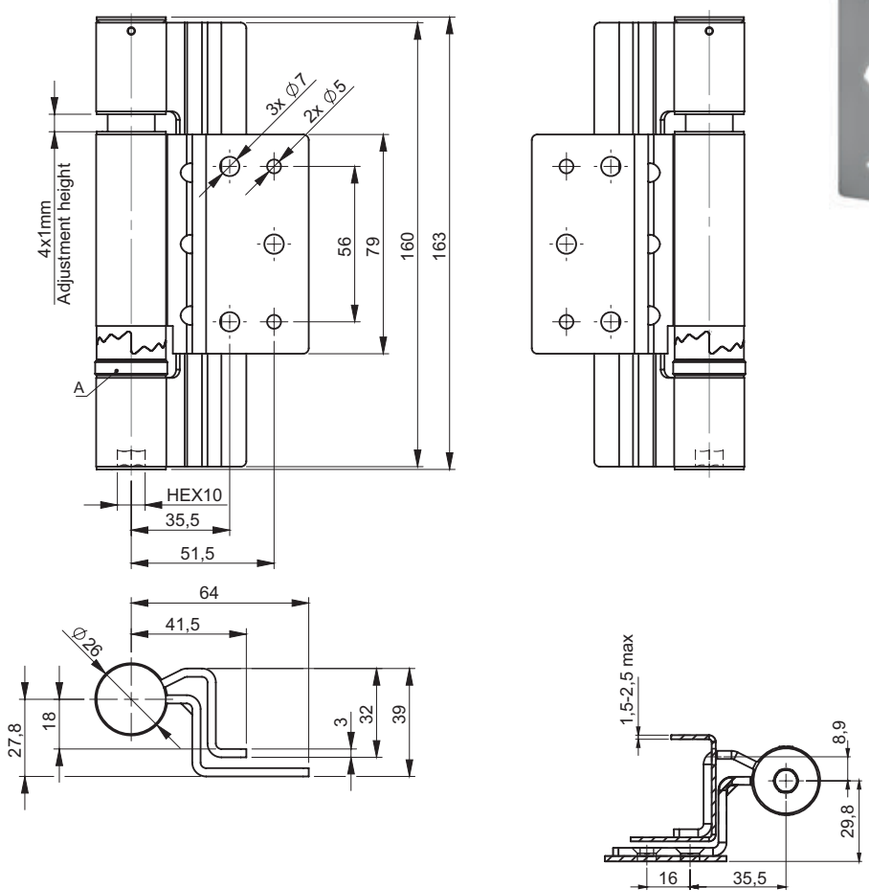

CATALOGUE NUMBER	VERSION	COMPONENTS	MATERIAL
3.ST109.009-A	Right	Holder, Base, Pin	Steel zinc plated
3.ST109.009-B	Left		

A - thrust bearing
Max. load: 80kg
Hinge welded to door frame and screwed into a door
4-stage height adjustment, each stage lifts or lowers the door of 1mm
Hinge 3.ST109.009 is compatible with spring hinge 3.ST109.001-A

3.ST125.001

Right version - open position

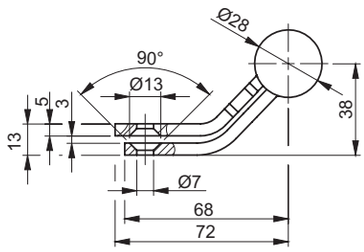

Left version - open position

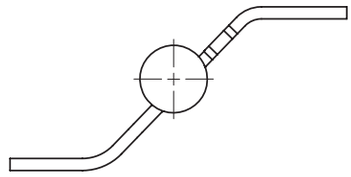

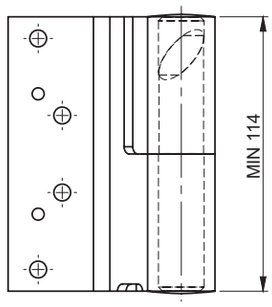

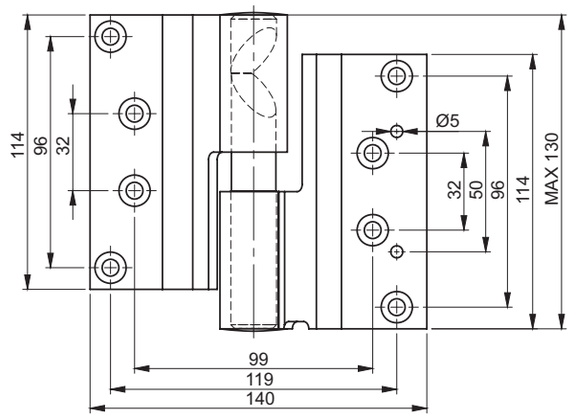

3.ST125.002

Right version - closed position

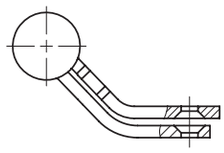

Right version - open position

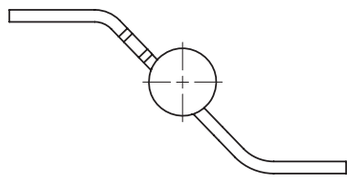

CAT. NUMBER	VERSION	COMPONENTS	MATERIAL	FINISH [C]
				Chrome
3.ST125.001	Left	Door, Insert	Carbon steel	01
3.ST125.002	Right			

Left version is the mirror image of the right version

How to order:

3.ST125.001 — C

Catalogue number

Finish

stainless steel

NEW

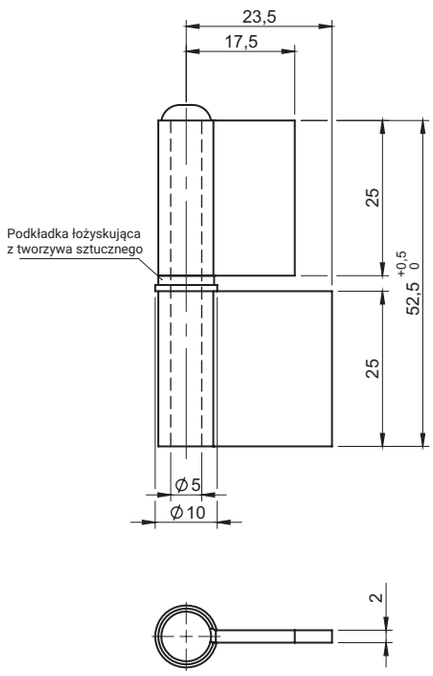

CATALOGUE NUMBER	COMPONENTS	MATERIAL
3.ST127.001SN	Holder, Base, Pin	Stainless steel

stainless steel

NEW

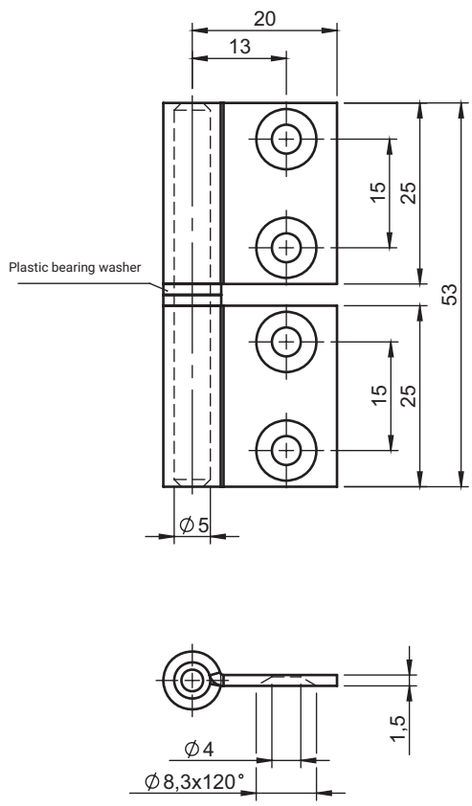

Hinge pin welded into one of the wings during final assembly.
Hinge supplied in a sets of parts.

CATALOGUE NUMBER	COMPONENTS	MATERIAL
3.ST127.002SN	Holder, Base, Pin	Stainless steel

Hinge 3.ST127.003SN

NEW

stainless steel

LEFT HINGE

RIGHT HINGE

LEFT HINGE
3.ST127.003SN - B

RIGHT HINGE
3.ST127.003SN - A

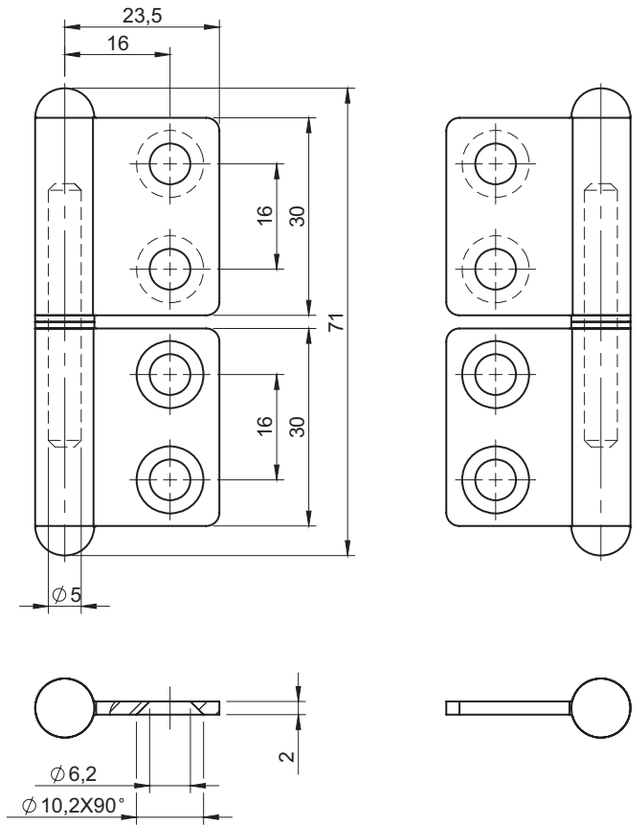

CATALOGUE NUMBER	VERSION	COMPONENTS	MATERIAL
3.ST127.003SN-A	Right	Holder, Base, Pin	Stainless steel
3.ST127.003SN-B	Left		

stainless steel

3.ST30.001
3.ST30.001SN

3.ST30.005

3.ST30.008
3.ST30.010

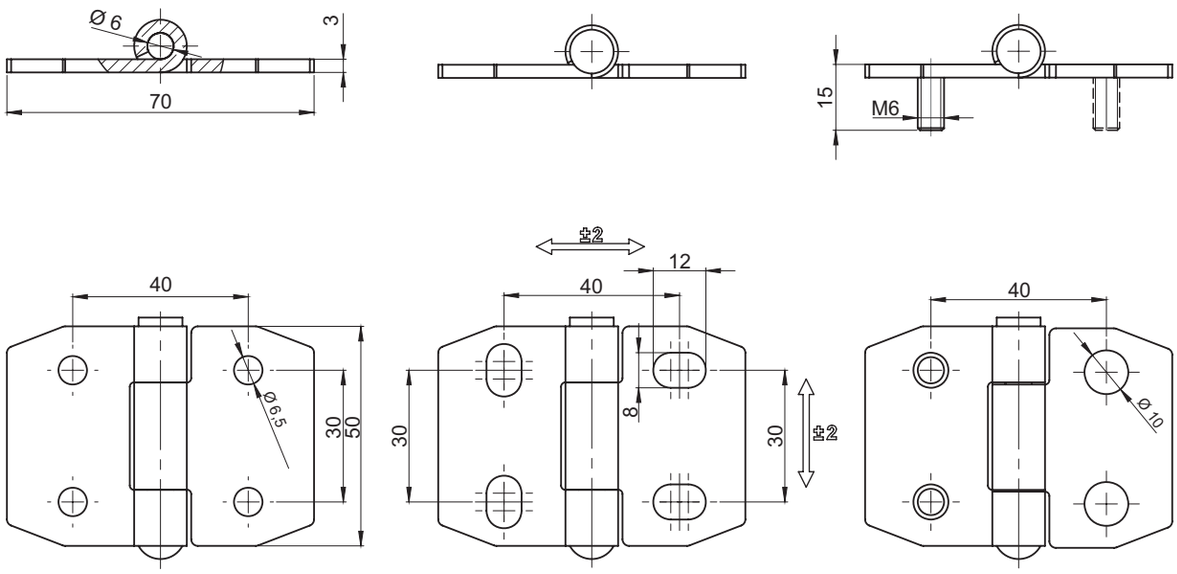

CATALOGUE NUMBER	VERSION	COMPONENTS	MATERIAL
3.ST30.001	4x Ø 6,5	Holder, Base	Steel zinc plated
		Pin	Stainless steel
3.ST30.001SN		Holder, Base, Pin	Stainless steel
3.ST30.005	4x 8x12	Holder, Base	Steel zinc plated
		Pin	Stainless steel
3.ST30.008	2x M6x15 2x Ø 10	Holder, Base	Steel zinc plated
		Pin	Stainless steel
3.ST30.010	4x M6x15	Holder, Base	Steel zinc plated
		Pin	Stainless steel

Hinge 3.ST35, 3.ST35-1

stainless steel

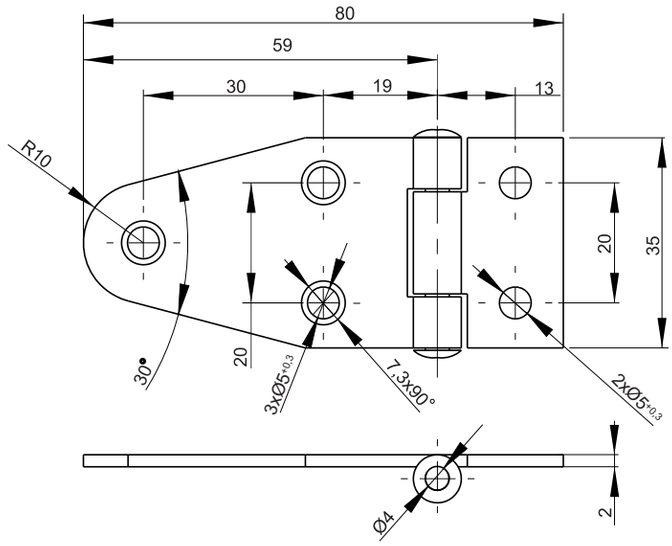

CATALOGUE NUMBER	COMPONENTS	MATERIAL
3.ST35-1.001	Holder, Base, Pin	Steel zinc plated
3.ST35-1.001SN	Holder, Base, Pin	Stainless steel

stainless steel

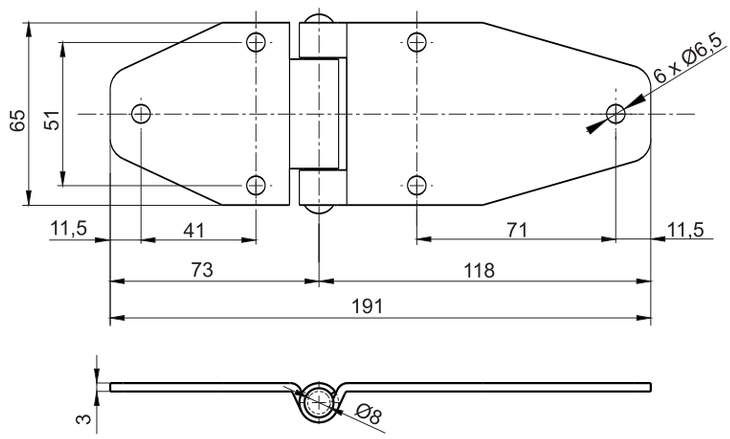

CATALOGUE NUMBER	COMPONENTS	MATERIAL
3.ST35.001	Holder, Base, Pin	Steel zinc plated
3.ST35.001SN	Holder, Base, Pin	Stainless steel

stainless steel

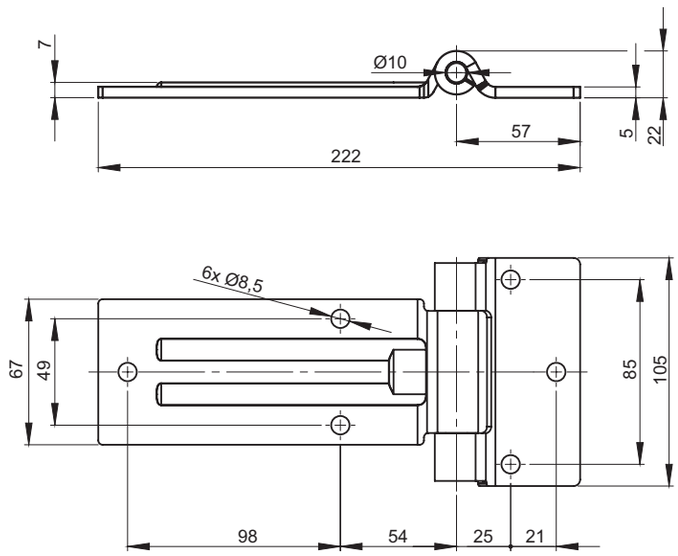

CATALOGUE NUMBER	COMPONENTS	MATERIAL
3.ST133.001	Holder, Base, Pin	Stainless steel polished

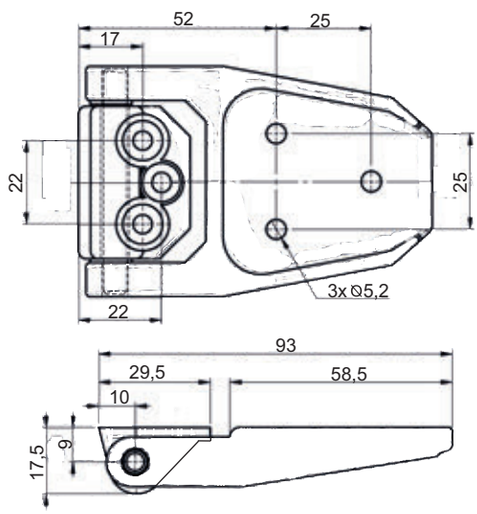

CATALOGUE NUMBER	COMPONENTS	MATERIAL	FINISH [C]
			RAL 9005
3.534.001	Holder, Base	Polyamide	07
	Pin	Polyamide	

Hinge 3.ST35-2, 3.ST58

stainless steel

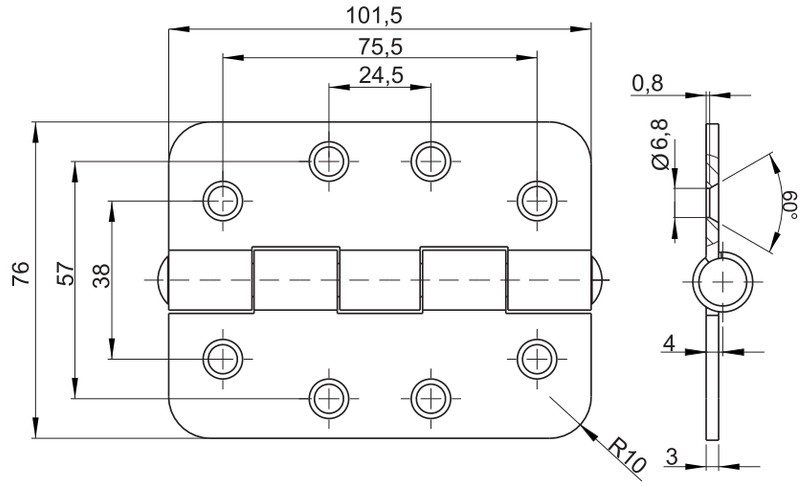

CATALOGUE NUMBER	COMPONENTS	MATERIAL
3.ST35-2.002	Holder, Base	Stainless steel
	Pin	Stainless steel

Hinge available with beveld holes or without.

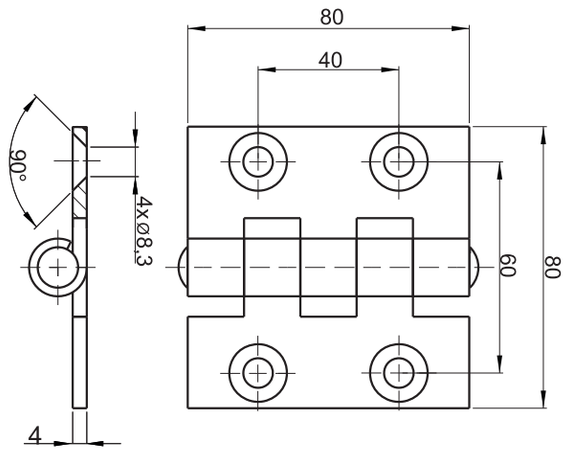

CATALOGUE NUMBER	COMPONENTS	MATERIAL
3.ST58.001	Holder, Base	Steel zinc plated
	Pin	Stainless steel

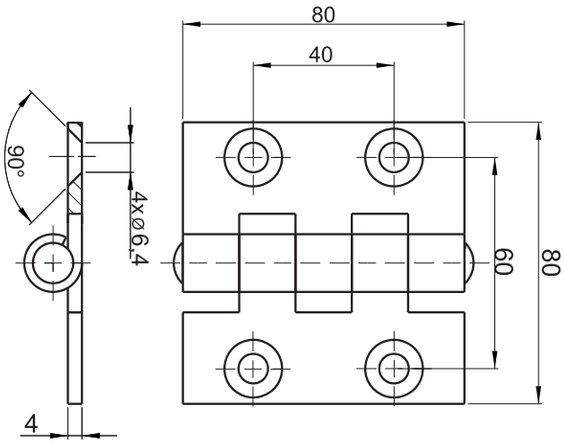

CATALOGUE NUMBER	COMPONENTS	MATERIAL
3.ST58.002	Holder, Base	Steel zinc plated
	Pin	Stainless steel

stainless steel

180°

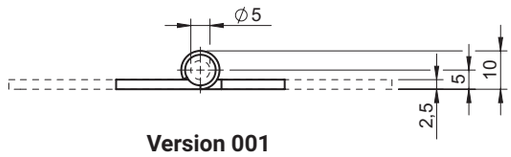

Version 001

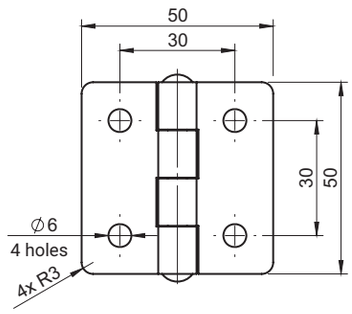

Version 002

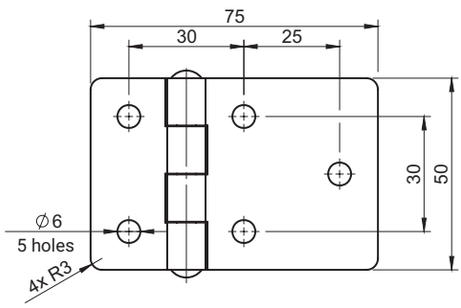

Version 003

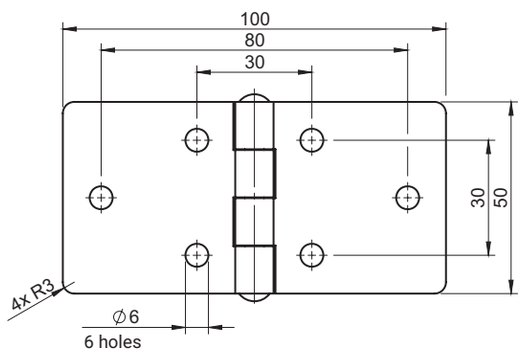

CATALOGUE NUMBER	COMPONENTS	MATERIAL	FINISH [C]		
			No finish	Galvanized	RAL 9005
3.ST114.001 3.ST114.002 3.ST114.003	Holder, Base	Steel	-	01	04
	Pin	Stainless steel	-	-	-
3.ST114.001SN 3.ST114.002SN 3.ST114.003SN	Holder, Base, Pin	Stainless steel	00	-	-

How to order:
Catalogue number
Finish [C]

3.ST114.001 — **04**

Hinge 3.ST117

3.ST117.001

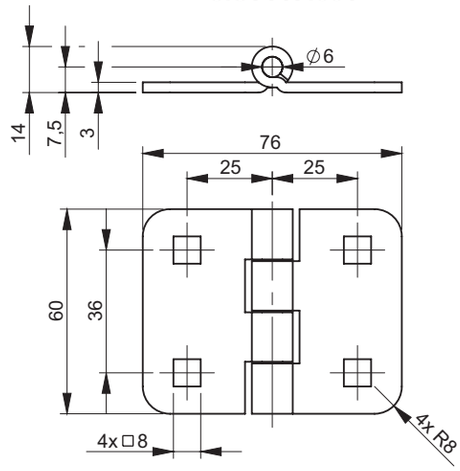

3.ST117.002

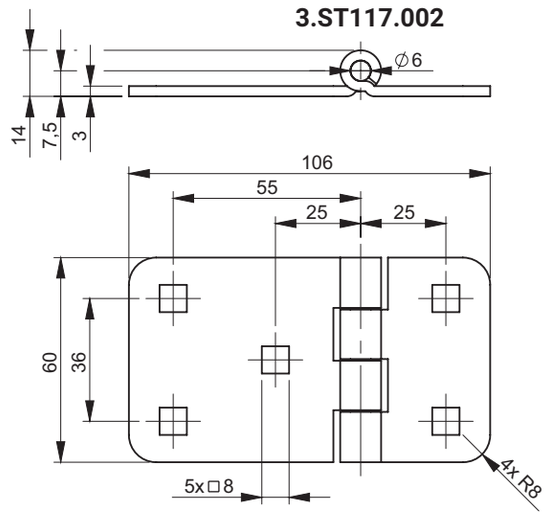

3.ST117.003

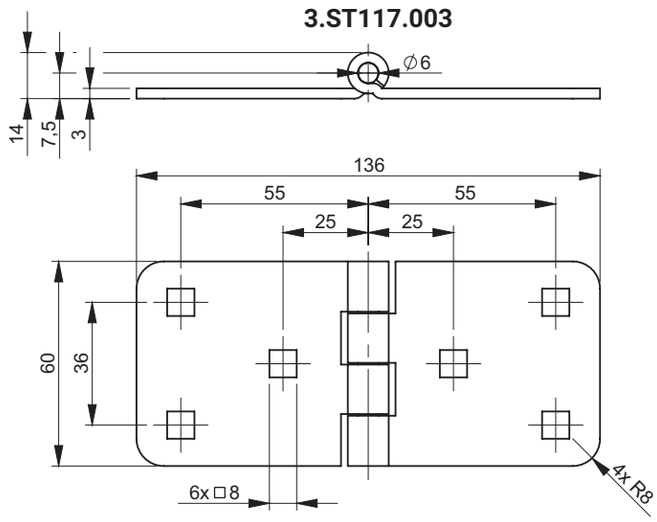

CATALOGUE NUMBER	COMPONENTS	MATERIAL
3.ST117.001 **3.ST117.002** **3.ST117.003**	Holder, Base, DIN603 M8x16	Steel zinc plated
	Pin	Stainless steel

Hinge sold together with set of screws DIN 603 M8x16

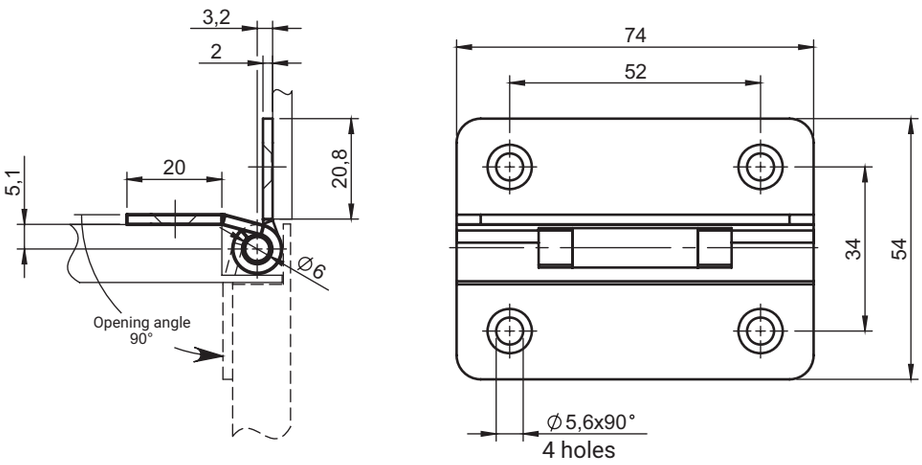

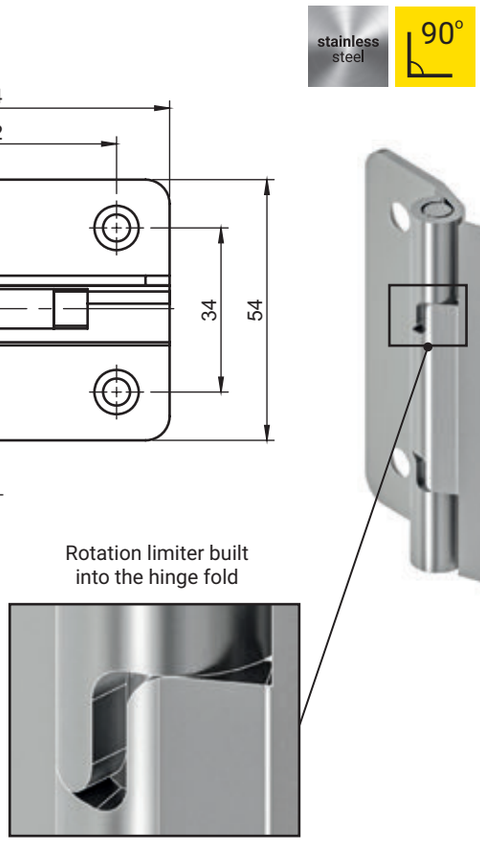

Hinge with an opening angle limiter up to 90°.

CATALOGUE NUMBER	COMPONENTS	MATERIAL
3.ST145.001SN	Holder, Base, Pin	Stainless steel

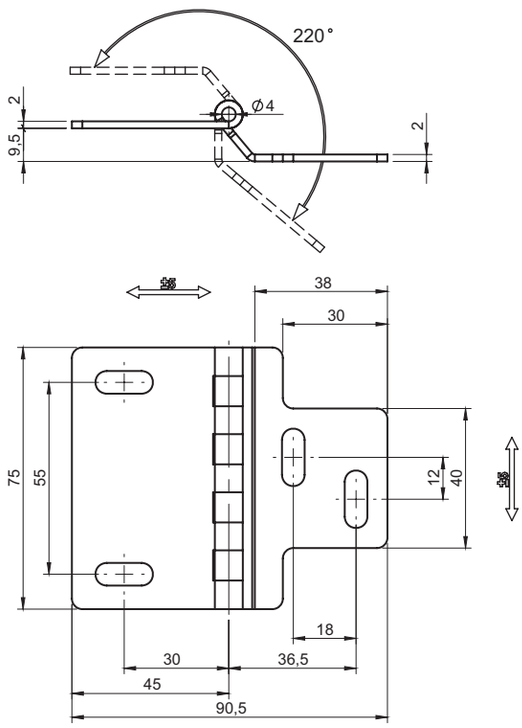

Hinge with two-way position adjustment

CATALOGUE NUMBER	MATERIAL
3.ST146.001SN	Stainless steel

Hinge 3.ST37, 3.ST48, 3.ST55

stainless steel

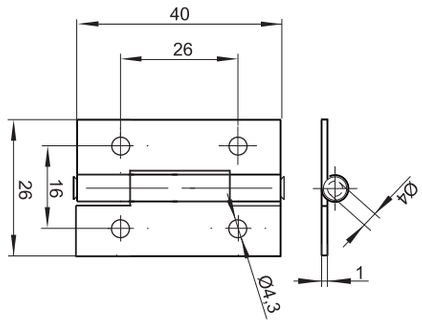

CATALOGUE NUMBER	COMPONENTS	MATERIAL
3.ST37.001	Holder, Base, Pin	Steel zinc plated
3.ST37.001SN	Holder, Base, Pin	Stainless steel

stainless steel

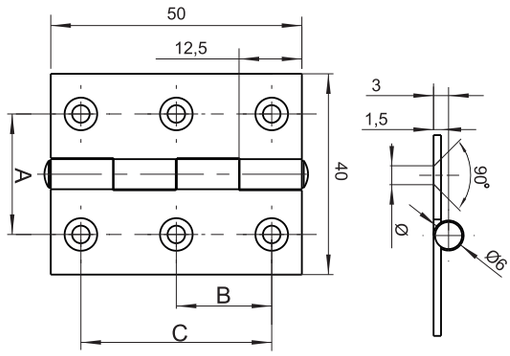

CATALOGUE NO.	X	Ø	A	B	C
3.ST48.00X 3.ST48.00X SN	1	4,7mm	24	19	38
	2	5mm	23	17,5	35
	3*	4mm	23	17,5	35

where:
X - indication of the hinge
* -no chamfer on mounting holes

CATALOGUE NUMBER	COMPONENTS	MATERIAL	FINISH [C]	
			RAL 9005	RAL 7035
3.ST48.00X	Holder, Base, Pin	Steel zinc plated	04	05
3.ST48.00X SN	Holder, Base, Pin	Stainless steel	-	-

How to order:

3.ST48.00X — C

Catalogue number

Finish

stainless steel

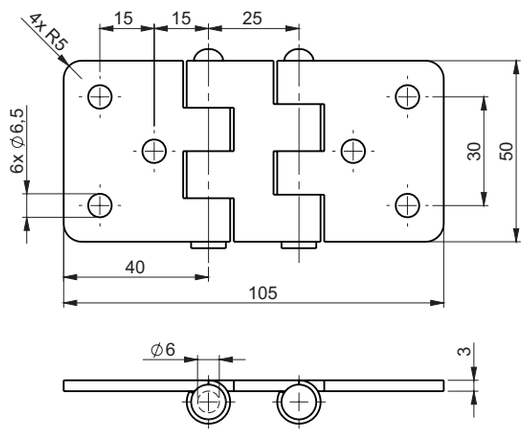

CATALOGUE NUMBER	COMPONENTS	MATERIAL
3.ST55.001	Holder, Base, Pin	Steel zinc plated
3.ST55.001SN	Holder, Base, Pin	Stainless steel

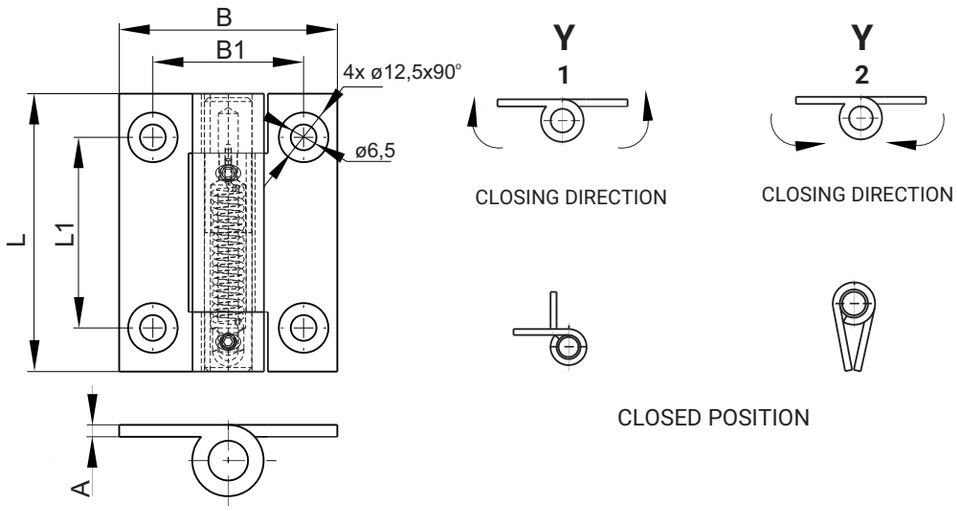

HINGE	X	A	L	L1	B	B1
3.ST108.X0Y	1	3	70	48	55	38
	2	3	80	60	65	45
	3	3	60	36	76	56

CATALOGUE NUMBER	COMPONENTS	MATERIAL
3.ST108.001	Holder, Base	Steel zinc plated
	Pin	Steel zinc plated

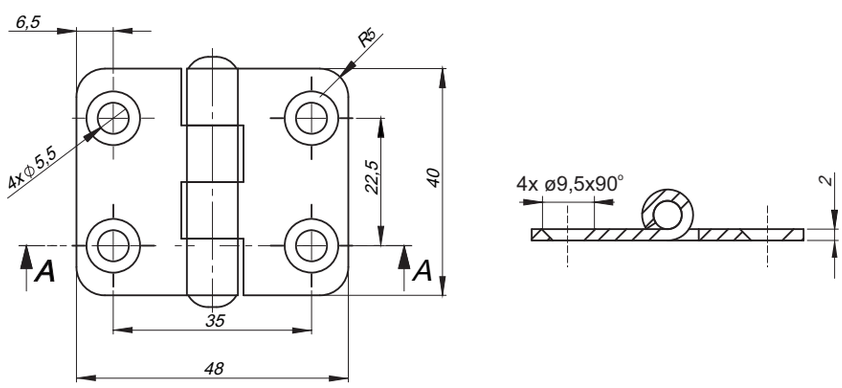

CATALOGUE NUMBER	COMPONENTS	MATERIAL
3.ST28.001	Holder, Base	Stainless steel 1.4301
	Pin	Stainless steel 1.4301

Hinge 3.ST56

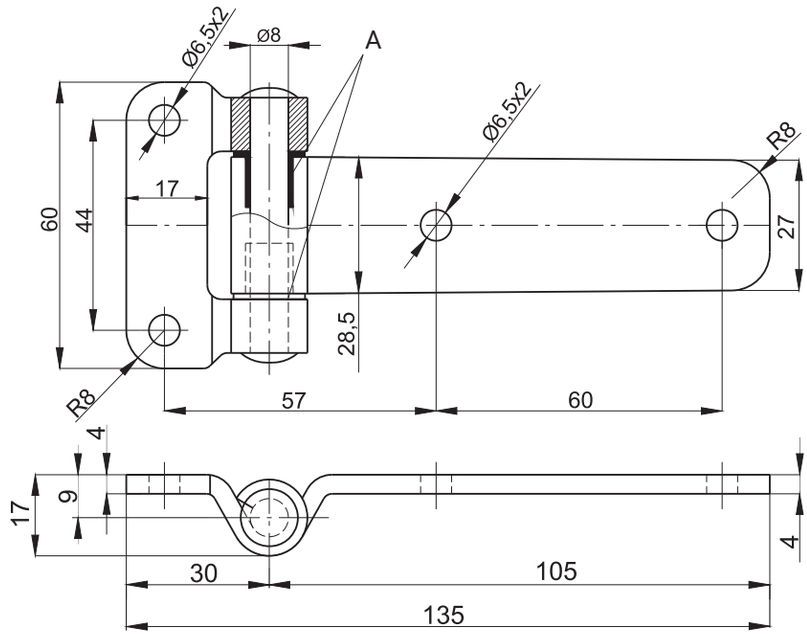

CATALOGUE NUMBER	COMPONENTS	MATERIAL	FINISH [C]
			RAL 9005
3.ST56.002	Holder, Base	Steel zinc plated	04
	Pin	Stainless steel	
3.ST56.002SN	Holder, Base, Pin	Stainless steel	-

A - plastic washers

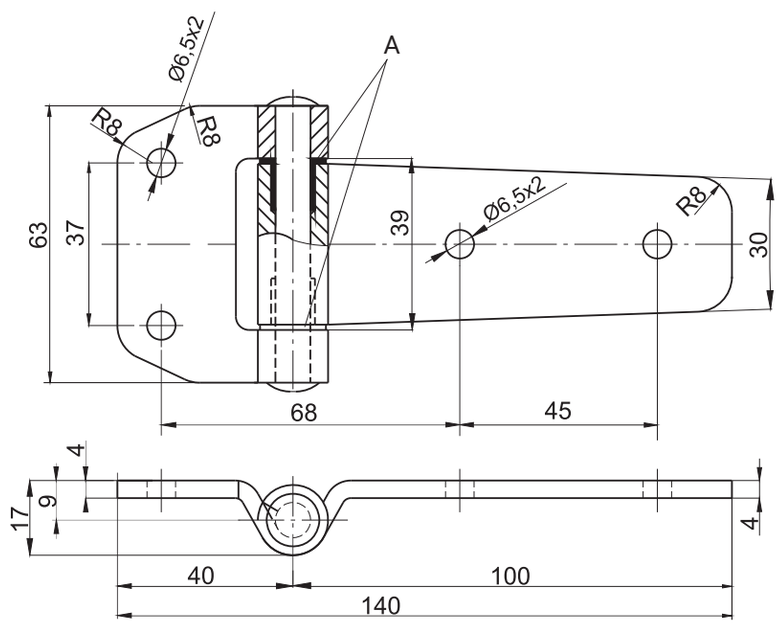

CATALOGUE NUMBER	COMPONENTS	MATERIAL	FINISH [C]
			RAL 9005
3.ST56.100	Holder, Base	Steel zinc plated	04
	Pin	Stainless steel	
3.ST56.100SN	Holder, Base, Pin	Stainless steel	-

A - plastic washers

3.ST116.001

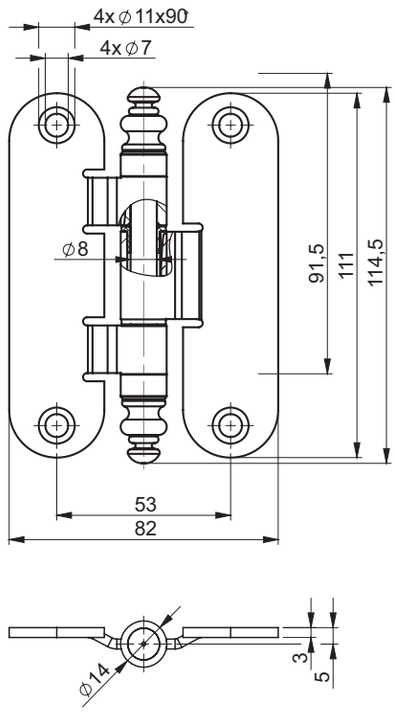

3.ST116.002

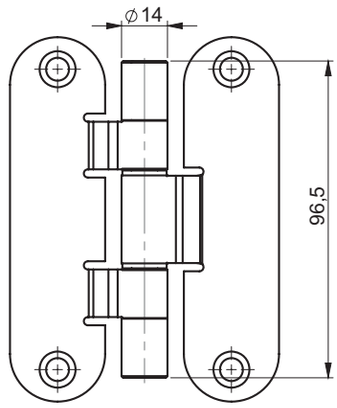

A - plastic bushing

CATALOGUE NUMBER	COMPONENTS	MATERIAL	FINISH
3.ST116.001.01	Holder, Base, Cap	Steel	Zinc plated + enamel
	Pin		Zinc plated
3.ST116.001.02	Holder, Base, Cap		Copper plated + enamel
	Pin		Zinc plated
3.ST116.002.01	Holder, Base, Cap		Zinc plated + enamel
	Pin		Zinc plated
3.ST116.002.02	Holder, Base, Cap		Copper plated + enamel
	Pin		Zinc plated

Hinge 3.ST56-2

ROZTOCZE

stainless steel | 180° | 240°

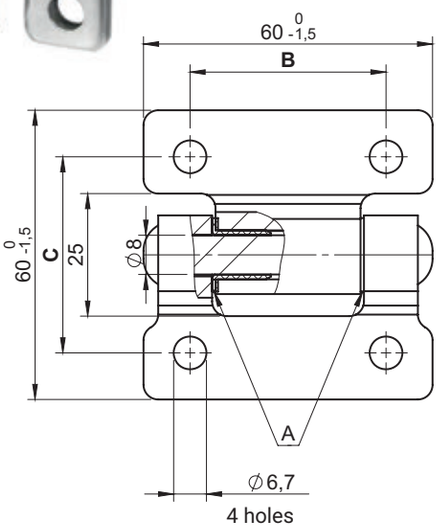

Version .001 .002

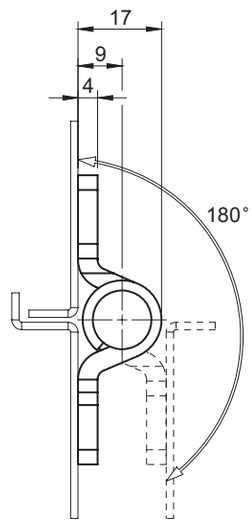

Version .003 .004

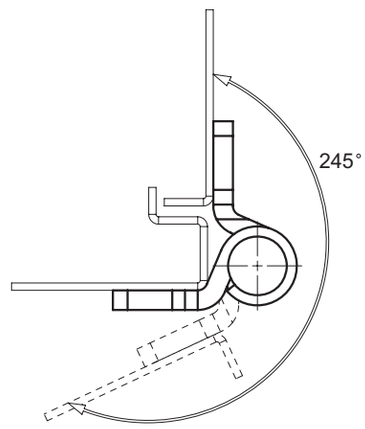

A - plastic bushing

CATALOGUE NUMBER	DIMENSION		COMPONENTS	MATERIAL	FINISH [C]
	B	C			RAL 9005
3.ST56-2.001	40	40	Holder, Base, Pin	Steel zinc plated Stainless steel	02
3.ST56-2.003					
3.ST56-2.002	44	43			
3.ST56-2.004					
3.ST56-2.001SN	40	40	Holder, Base, Pin	Stainless steel	Brak
3.ST56-2.003SN					
3.ST56-2.002SN	44	43			
3.ST56-2.004SN					

How to order:
Catalogue number
Finish [C]

3.ST56-2.001 — **02**

Hinge 3.ST134.001SN

NEW

stainless steel

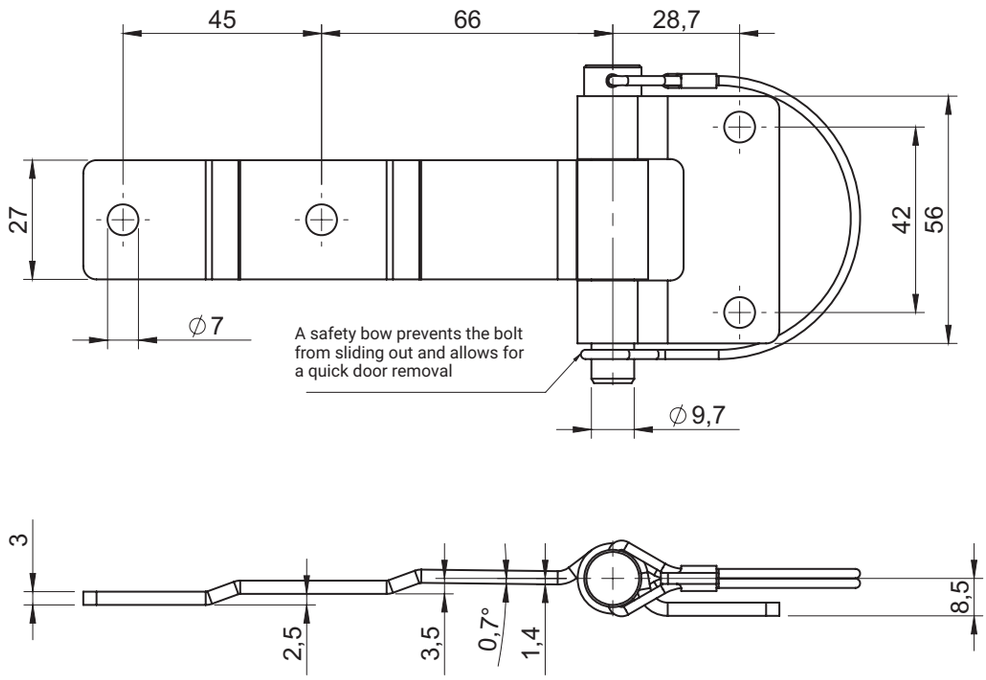

CATALOGUE NUMBER	COMPONENTS	MATERIAL
3.ST134.001SN	Holder, Base, Pin, Safety bow	Stainless steel

Hinge 3.ZN20, 3.ST49

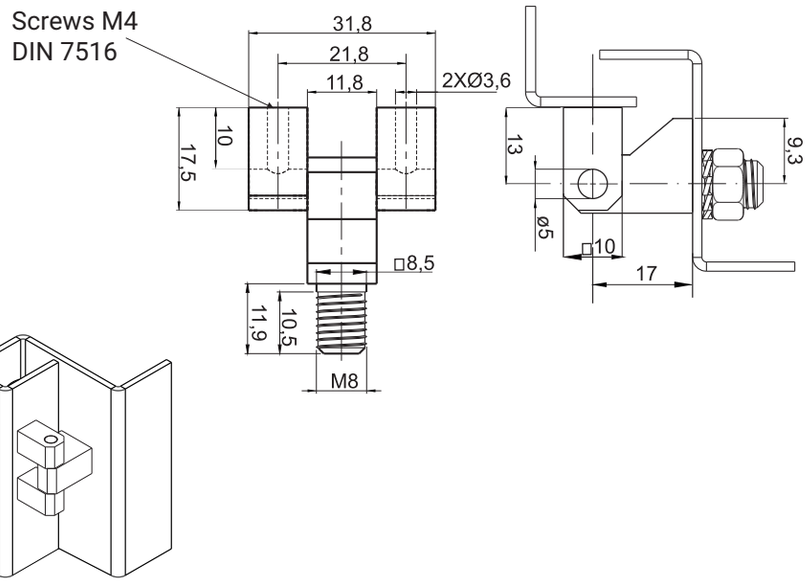

CATALOGUE NUMBER	COMPONENTS	MATERIAL	FINISH [C]
			RAL 9005
3.ZN20.001	Holder, Base	ZAMAK 5	04
	Pin	Steel zinc plated *	

180°

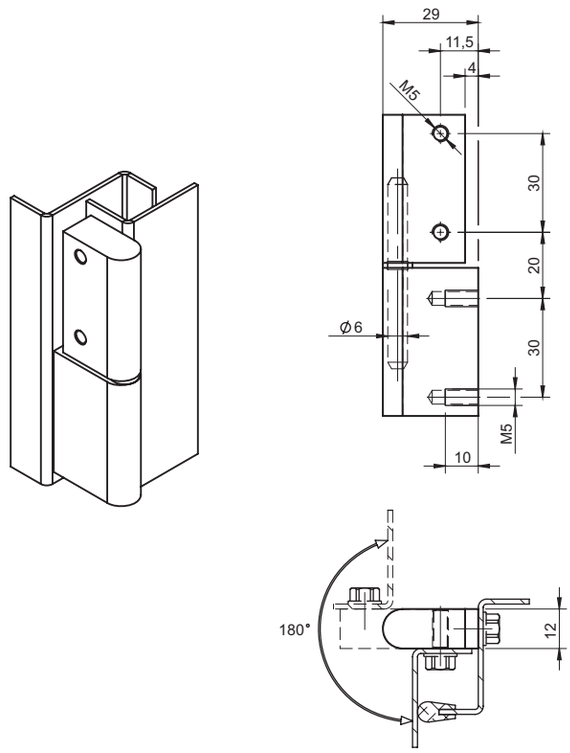

CATALOGUE NUMBER	COMPONENTS	MATERIAL	FINISH [C]
			RAL 9005
3.ST49.001	Holder, Base	Steel	04
	Pin	Steel zinc plated	

Hinge 3.ZN158.001

ROZTOCZE

NEW

180°

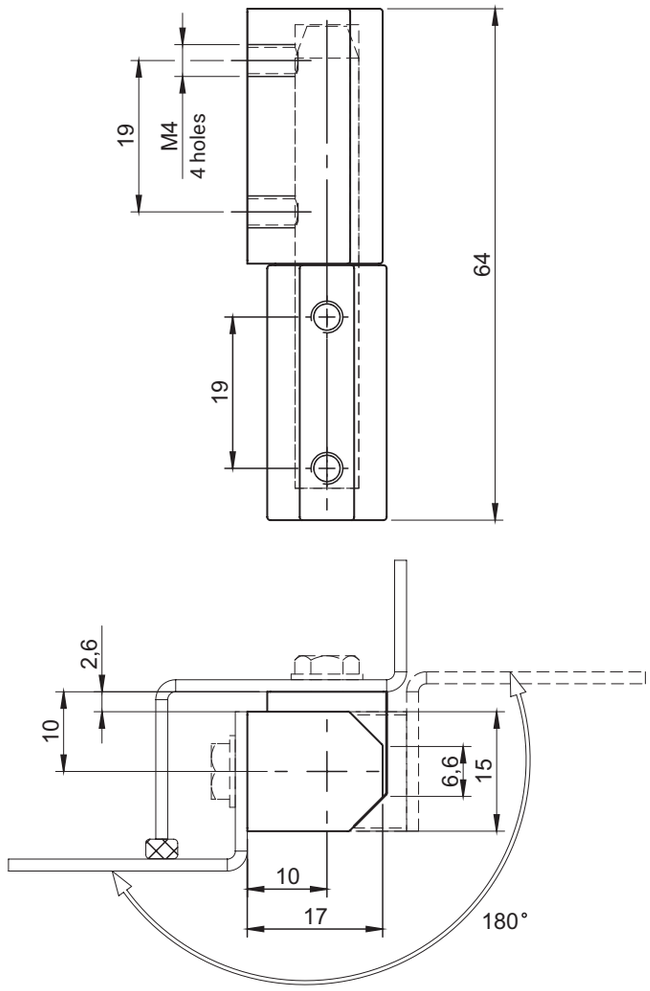

CATALOGUE NUMBER	COMPONENTS	MATERIAL	FINISH [C]	
			Chrome	RAL 9005
3.ZN158.001	Base, Holder	ZAMAK	01	04
	Insert	Stainless Steel	-	-

How to order:

3.ZN158.001 — **01**

Catalogue number

Finish [C]

Hinge 3.ZN155

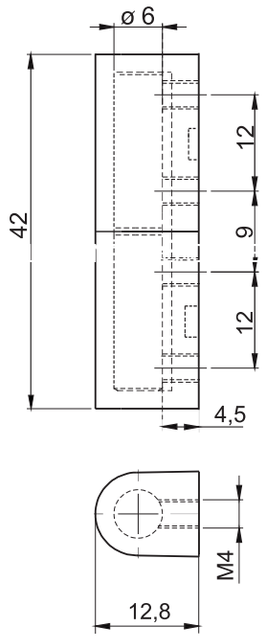

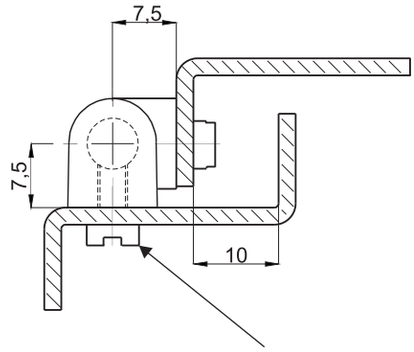

Screws M4 with cylindrial head
DIN 84, ISO1207 **

CATALOGUE NUMBER	COMPONENTS	MATERIAL	FINISH [C]
			RAL 9005
3.ZN155.001	Holder, Base	ZAMAK 5	04
	Pin	Steel zinc plated, *	

* posibility to order stainless steel pin.
**not included order

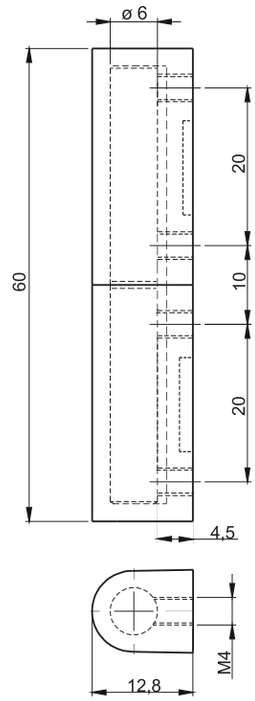

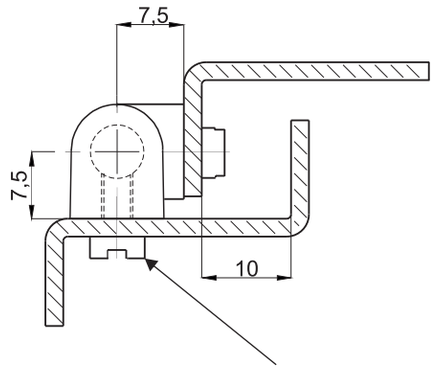

Screws M4 with cylindrial head
DIN 84, ISO1207 **

CATALOGUE NUMBER	COMPONENTS	MATERIAL	FINISH [C]
			RAL 9005
3.ZN155.002	Holder, Base	ZAMAK 5	04
	Pin	Steel zinc plated, *	

* posibility to order stainless steel pin.
**not included order

NEW

180°

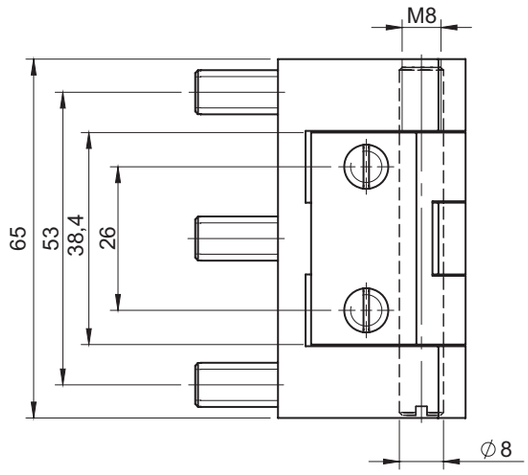

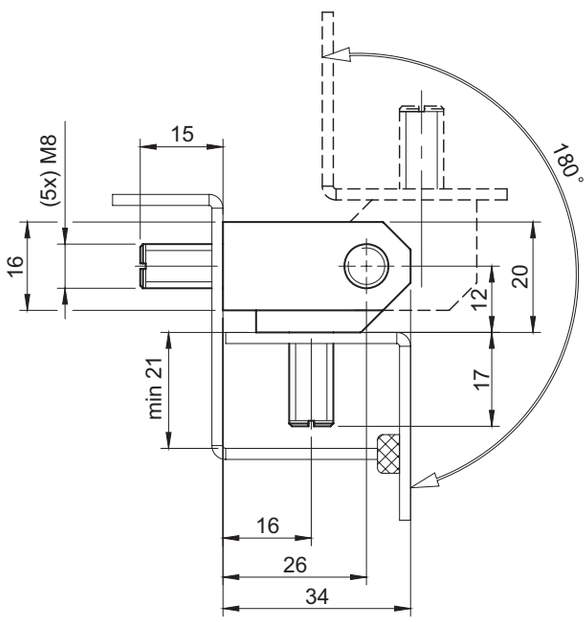

CATALOGUE NUMBER	COMPONENTS	MATERIAL	FINISH [C]
			Nickel
3.ST126.001	Holder, Base, Pin	Steel	02

Hinge 3.ZN151,3.ZN152, 3.ST53

ROZTOCZE

3.ZN151.001

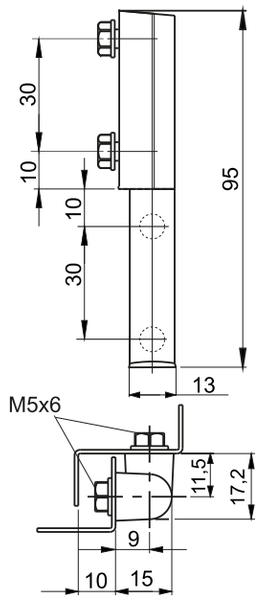

3.ZN152.001

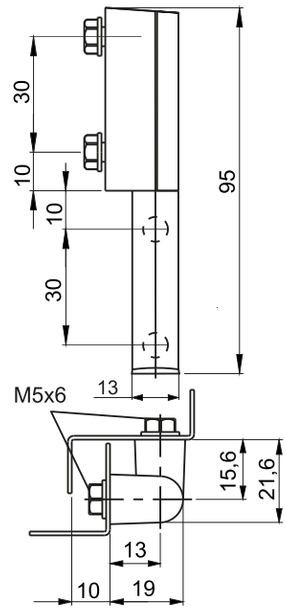

CATALOGUE NUMBER	COMPONENTS	MATERIAL	FINISH [C]
			RAL 9005
3.ZN151.001 3.ZN152.001	Holder, Base	Polyamide	07
	Pin	Stainless steel	-

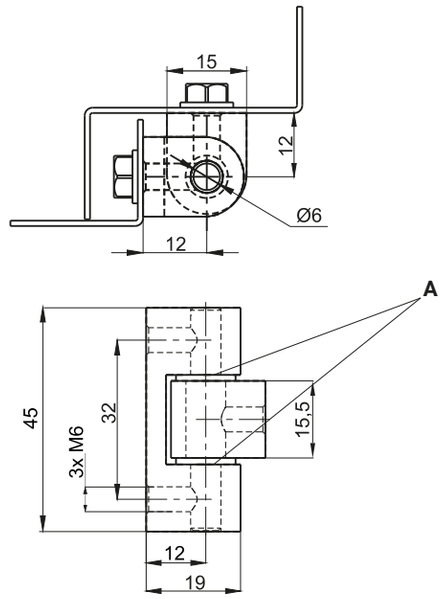

CATALOGUE NUMBER	COMPONENTS	MATERIAL	FINISH [C]	
			Chrome	RAL9005
3.ST53.001	Holder, Base	ZAMAK 5	01	04
	Pin	Stainless steel	-	
3.ST53.002	Holder, Base	Steel	01	04
	Pin	Stainless steel	-	

A - plastic washer

stainless steel

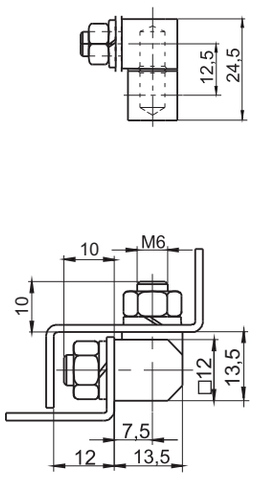

3.STZH2.001

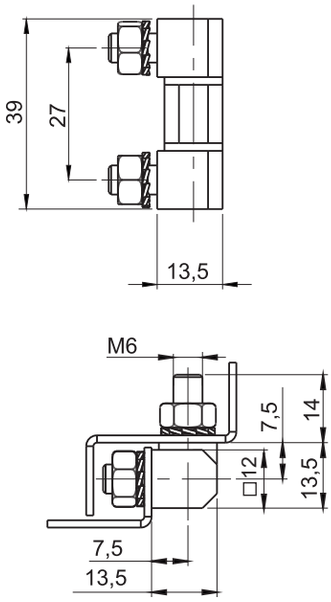

3.STZH3.001

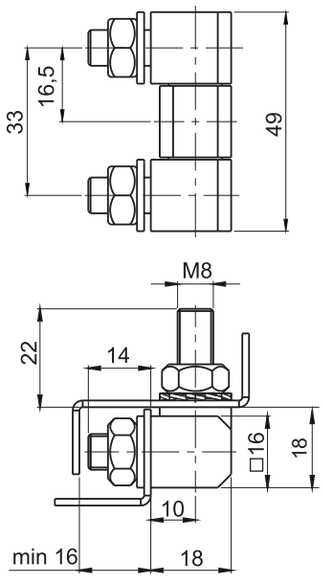

3.STZH3-1.001

CATALOGUE NUMBER	COMPONENTS	MATERIAL
3.STZH2.001 3.STZH3.001 3.STZH3-1.001	Holder, Base, Pin	Steel zinc plated
3.STZH2.001SN 3.STZH3.001SN 3.STZH3-1.001SN	Holder, Base, Pin	Stainless steel

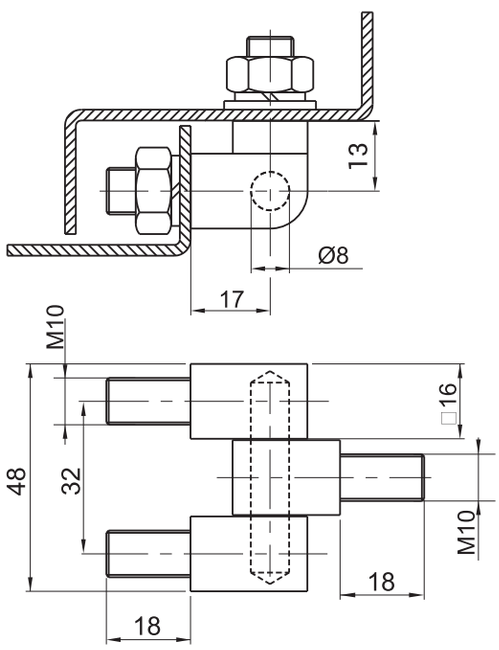

CATALOGUE NUMBER	COMPONENTS	MATERIAL
3.ST73.001	Holder, Base, Pin	Steel zinc plated

Hinge 3.504, 3.505, 3.506, 3.507

3.504.001

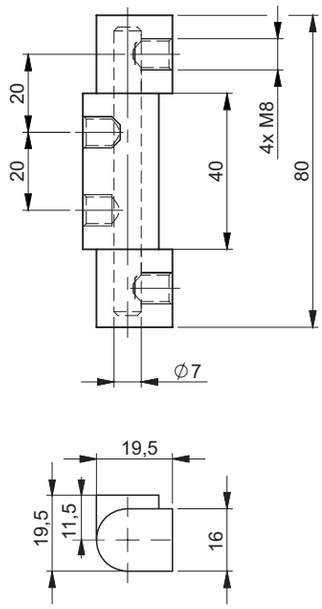

3.505.001

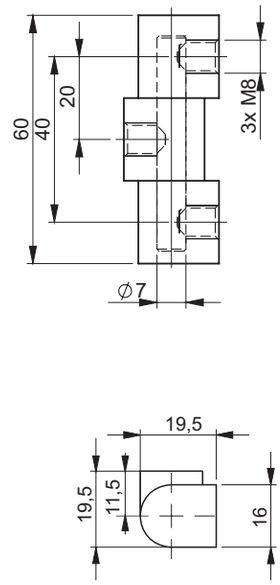

CATALOGUE NUMBER	COMPONENTS	MATERIAL	FINISH [C]	
			Galvanized	Chrome
3.504.001 **3.505.001**	Holder, Base	Brass	00	01
	Pin	Steel zinc plated		

How to order:

3.504.001 — C

Catalogue number

Finish

3.506.001

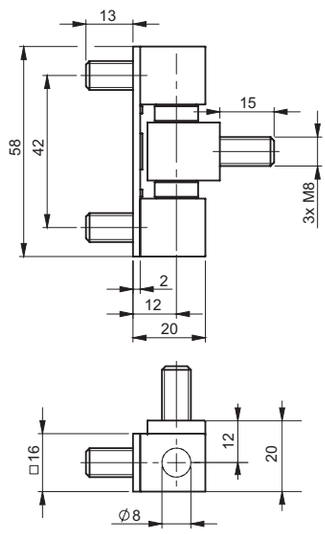

3.507.001

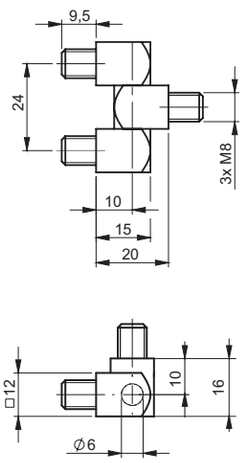

CATALOGUE NUMBER	COMPONENTS	MATERIAL	FINISH [C]
			Nickel
3.506.001 **3.507.001**	Holder, Base	Steel	02
	Pin	Steel zinc plated	

How to order:

3.506.001 — C

Catalogue number

Finish

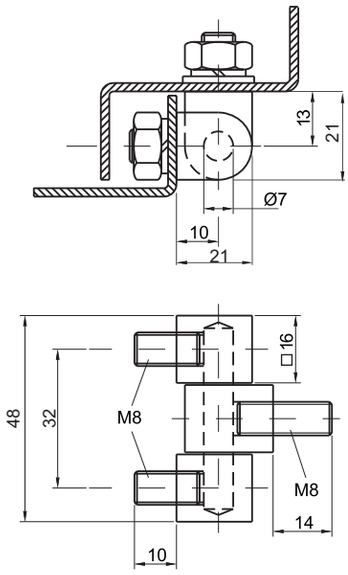

CATALOGUE NUMBER	COMPONENTS	MATERIAL
3.ST17.001	Pin	Steel zinc plated
	Holder, Base	Brass
3.ST17.001SN	Holder, Base, Pin	Stainless steel

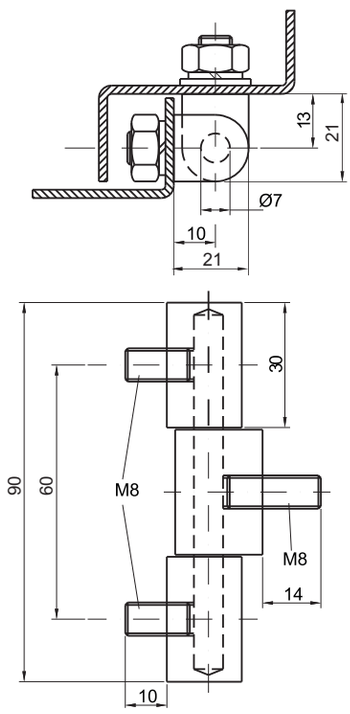

CATALOGUE NUMBER	COMPONENTS	MATERIAL
3.ST18.001	Pin	Steel zinc plated
	Holder, Base	Brass
3.ST18.001SN	Holder, Base, Pin	Stainless steel

Hinge 3.ST21, 3.ST22

stainless steel

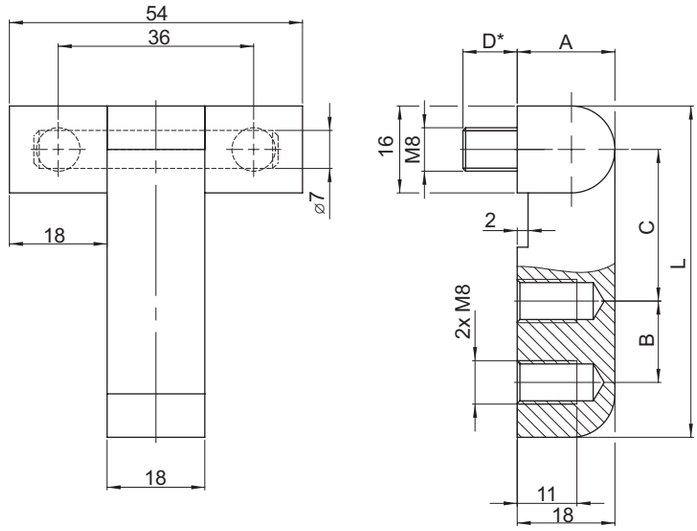

CATALOGUE NO.	L	A	B	C	D	COMPONENTS	MATERIAL
3.ST21.001	61	18	15	28	10	Holder Base Pin	Steel zinc plated Brass zinc plated Steel zinc plated
3.ST21.102	71	18	15	38	10		
3.ST21.103	74	18	23	35	10		
3.ST21.104	93	18	30	45	20		
3.ST21.105	108	18	30	60	20		
3.ST21.106	93	25	30	45	20	Holder, Base Pin	Steel zinc plated
3.ST21.107	108	25	30	60	20		
3.ST21.001SN	61	18	15	28	10	Holder Base Pin	Stainless steel
3.ST21.102SN	71	18	15	38	10		
3.ST21.103SN	74	18	23	35	10		
3.ST21.104SN	93	18	30	45	20		
3.ST21.105SN	108	18	30	60	20		
3.ST21.106SN	93	25	30	45	20	Holder, Base Pin	Stainless steel
3.ST21.107SN	108	25	30	60	20		

* possibilty to make in different dimension

stainless steel

180°

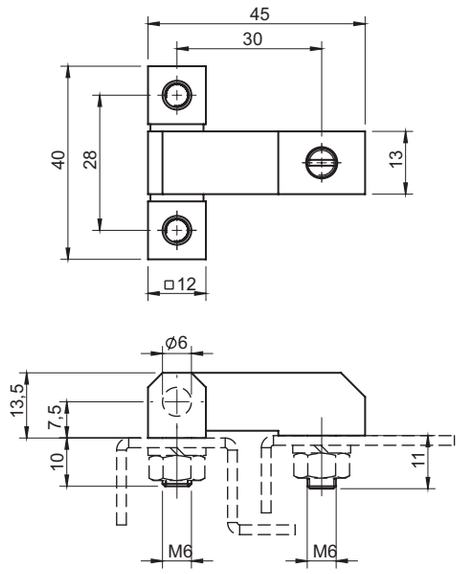

3.ST22.001		
3.ST22.001SN		

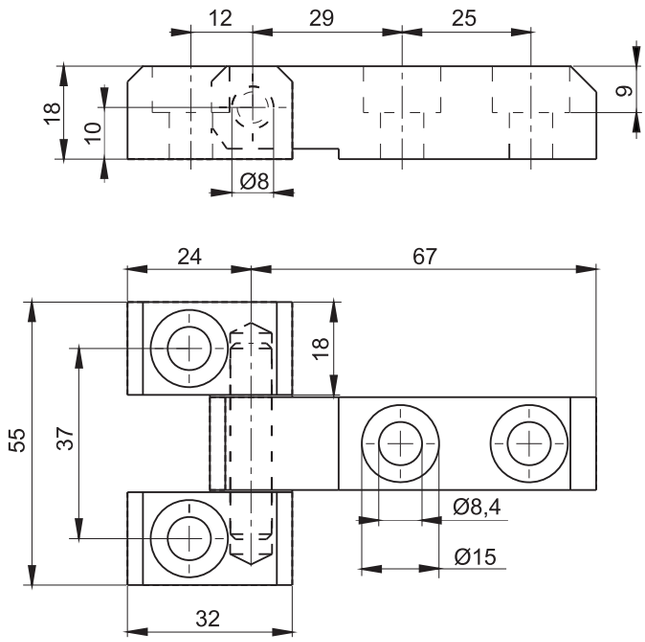

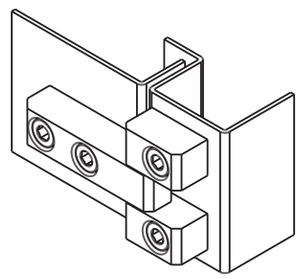

CATALOGUE NUMBER	COMPONENTS	MATERIAL
3.ST29.001	Holder, Base	Steel zinc plated
3.ST29.001SN	Holder, Base	Stainless steel

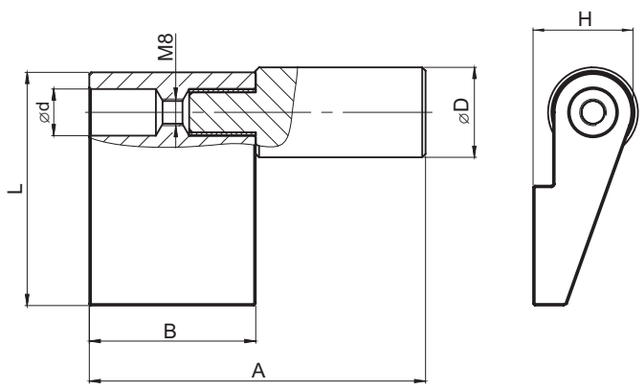

HINGE	D	d	L	H	A	B
3.ST102.001	27	14	70	30	101	50
3.ST102.002	27	14	90	30	101	50
3.ST102.006	20	12	55,5	24	80	40

CATALOGUE NO.	COMPONENTS	MATERIAL
3.ST102.00X	Fin	Steel
	Pin	

Hinge 3.ZN70, 3.ZN.75

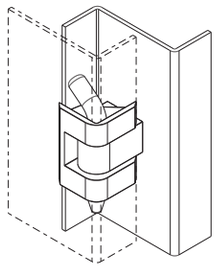

Version
3.ZN70.001
3.ZN70.002

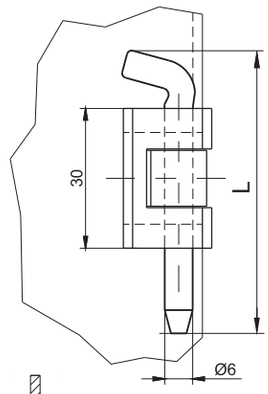

Version
3.ZN70.003

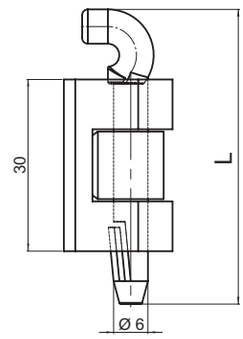

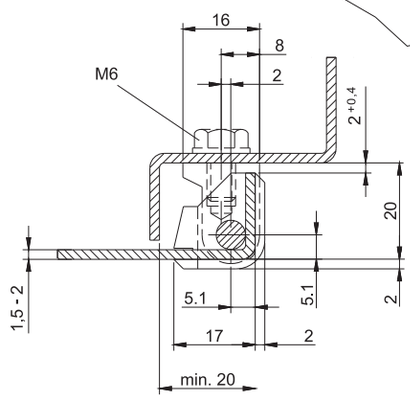

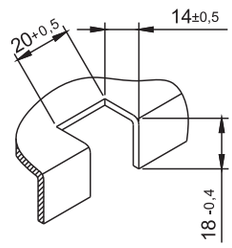

Mounting hole

CATALOGUE NO.	DIMENSION L [mm]		COMPONENTS	MATERIAL	FINISH [C]				
					Chrome	Nickel	RAL9005	RAL7035	RAL7032
3.ZN70.001	56,5	70	Holder, Base	ZAMAK 5	01	02	04	05	12
			Pin	Steel zinc plated					
3.ZN70.003	51,5		Holder, Base	ZAMAK5					
			Pin	POM					
3.ZN70.002SN	56,5	70	Holder, Base, Pin	Stainless steel	-				

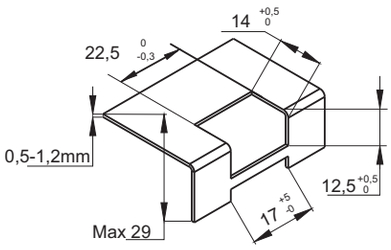

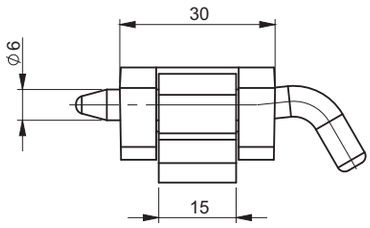

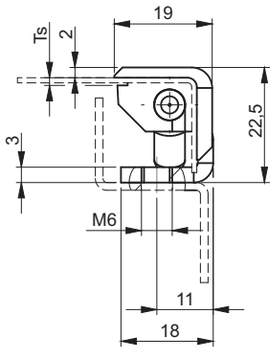

Ts - thickness of metal sheet [mm]

CATALOGUE NUMBER	Ts [mm]	COMPONENTS	MATERIAL	FINISH [C]			
				Chrome	Nickel	RAL9005	RAL7035
3.ZN75.003	0,8-1,2	Holder, Base	ZAMAK 5	01	02	04	05
		Pin	Steel zinc plated				
3.ZN75.004	1,5-2,0	Holder, Base	ZAMAK 5				
		Pin	Steel zinc plated				

How to order:

3.ZN75.001 — L — C

Catalogue number

Dimension

Finish

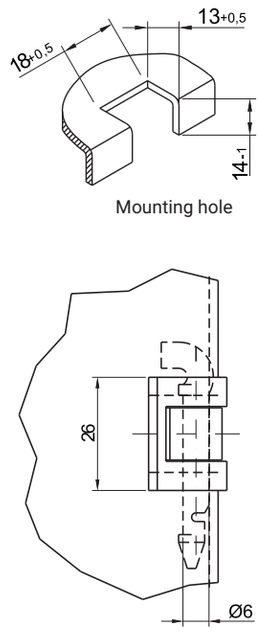

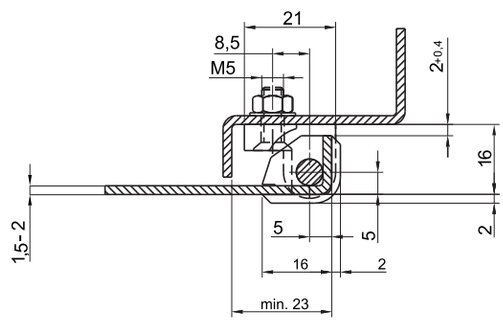

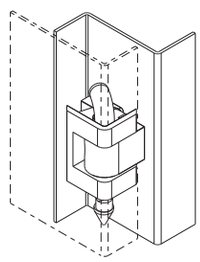

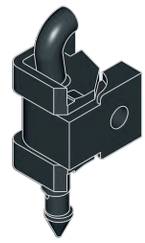

CATALOGUE NUMBER	COMPONENTS	MATERIAL	FINISH [C]	
			RAL9005	RAL7035
3.ZN90.001	Holder, Base, Pin	Polyamide	07	08

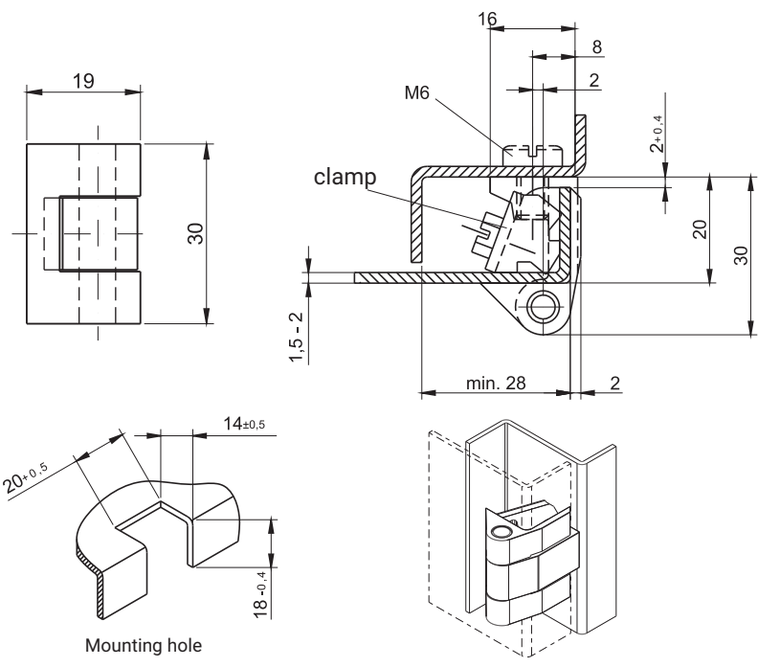

CATALOGUE NUMBER	COMPONENTS	MATERIAL	FINISH [C]	
			RAL9005	RAL7035
3.ZN100.001	Holder, Base	ZAMAK 5	04	05
	Close tight element, Pin	Steel zinc plated		

* possibility to make a different color

How to order: 3.ZN100.001 — C

Catalogue number

Finish

Hinge 3.ZN80

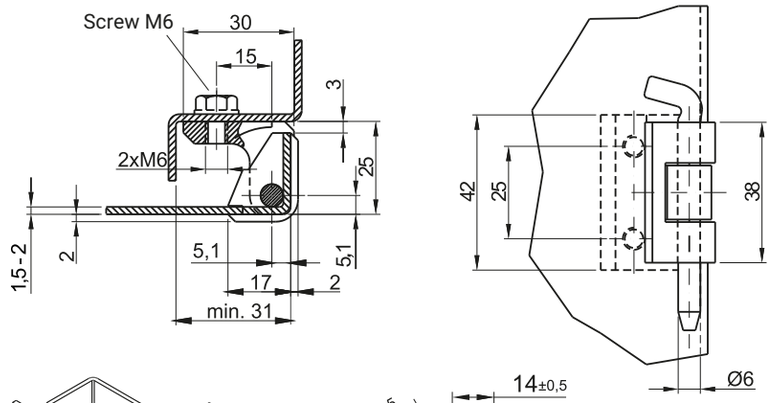

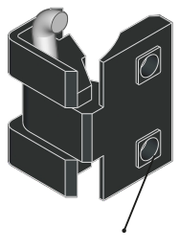

** - with weaning□8x1 mm

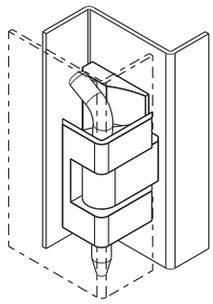

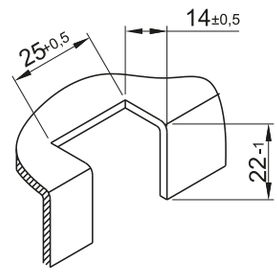

Mounting hole

Can be ordered without thread
** possibility to order the hinge with the basewith weaning

CATALOGUE NUMBER	COMPONENTS	MATERIAL	FINISH [C]	
			RAL9005	RAL7035
3.ZN80.001	Holder, Base	ZAMAK 5	04	05
	Pin	Steel zinc plated		

* possibility to make a different color

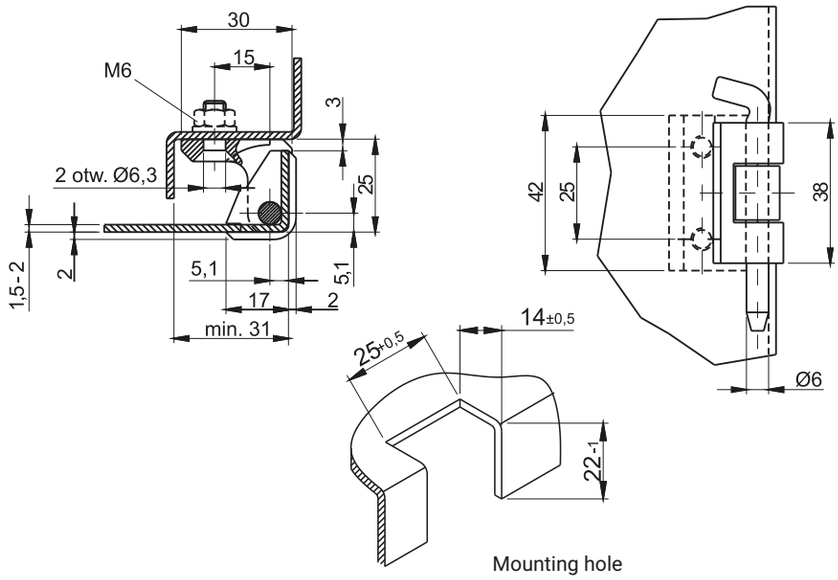

Mounting hole

CATALOGUE NUMBER	COMPONENTS	MATERIAL	FINISH [C]	
			RAL9005	RAL7035
3.ZN80.002	Holder, Base	ZAMAK 5	04	05
	Pin	Steel zinc plated		

* possibility to make a different color

How to order: 3.ZN80.001 — C

Catalogue number

Finish

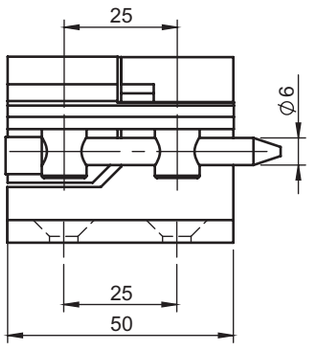

3.ZN150.001

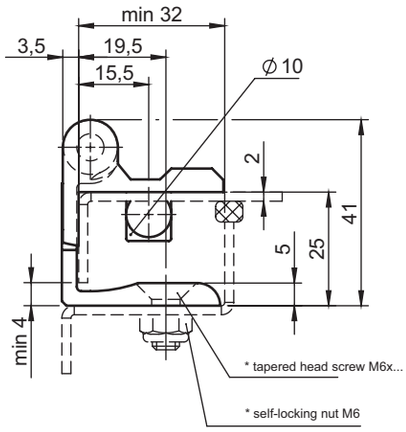

3.ZN150.002

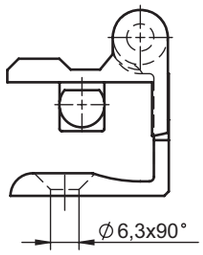

Left hinge

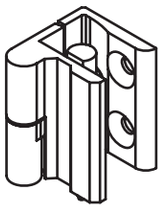

Right hinge

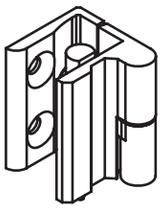

3.ZN150.007

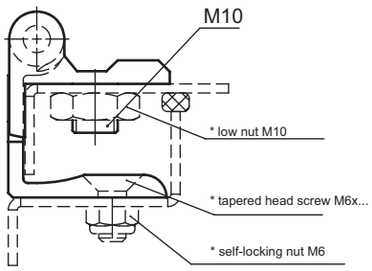

3.ZN150.008

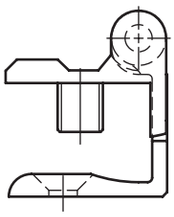

x

3.ZN150.005

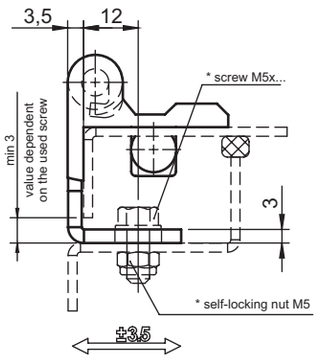

3.ZN150.006

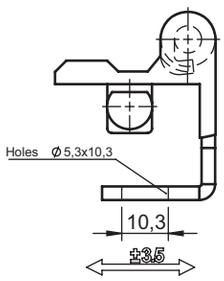

180° opening angle hinge with a lock to prevent the door from being removed from the cabinet when the door is closed and a door opening angle of less than ~60°
* - not included, to be ordered separately

VERSION	CATALOGUE NUMBER	COMPONENTS	MATERIAL	FINISH [C]
				RAL9005
Right	3.ZN150.001 3.ZN150.007	Holder	ZAMAK 5	04
		Base	ZAMAK 5	
Left	3.ZN150.002 3.ZN150.008	Screw	Poliamid	
		Pin	Steel zinc plated	-
Right	3.ZN150.005	Holder	ZAMAK 5	04
		Base	Steel	
Left	3.ZN150.006	Screw	Poliamid	
		Pin	Steel zinc plated	-

Hinge 3.ZN154

ROZTOCZE

180°

3.ZN154.001

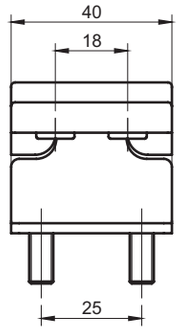

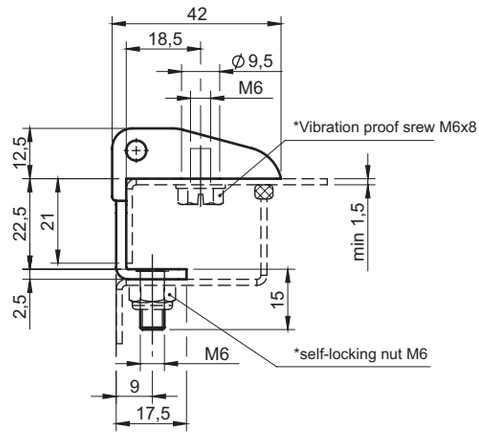

3.ZN154.002

3.ZN154.001

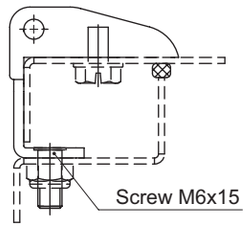

3.ZN154.002

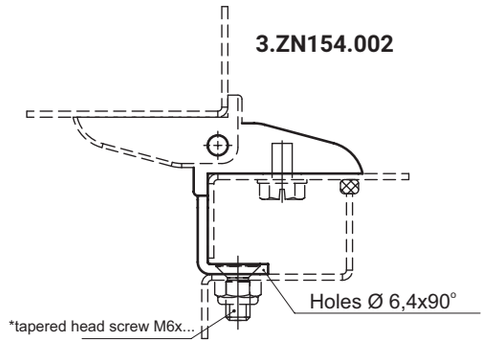

3.ZN154.003

3.ZN154.003

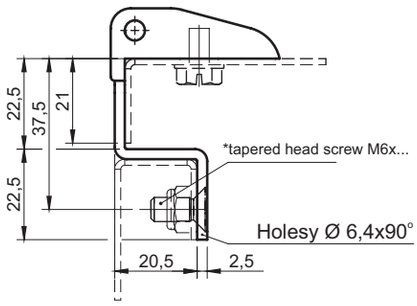

3.ZN154.010

3.ZN154.010

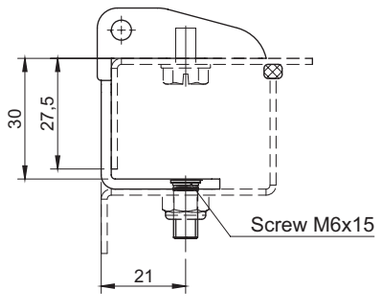

*not included, to be ordered separately

CATALOGUE NUMBER	COMPONENTS	MATERIAL	FINISH [C]	
			RAL9005	RAL7035
3.ZN154.001 3.ZN154.002 3.ZN154.003 3.ZN154.010	Holder	ZAMAK 5	04	05
	Base	Steel zinc plated		
	Pin	Stainless steel	-	-

How to order:

3.ZN154.001 — C

Catalogue number

Finish

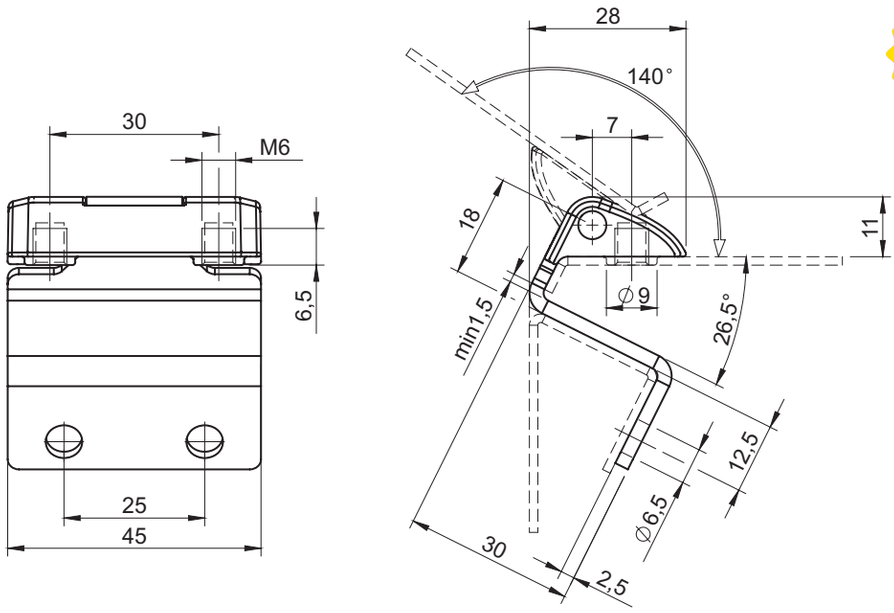

NEW

140°

CATALOGUE NUMBER	COMPONENTS	MATERIAŁ
3.ZN157.001	Holder	ZAMAK
	Base	Steel zinc plated
	Pin	Stainless steel

FINISH [C]	
RAL9005	RAL7035
04	05

How to order:

Catalogue number — 3.ZN154.001

Finish [C] — 04

stainless steel

180°

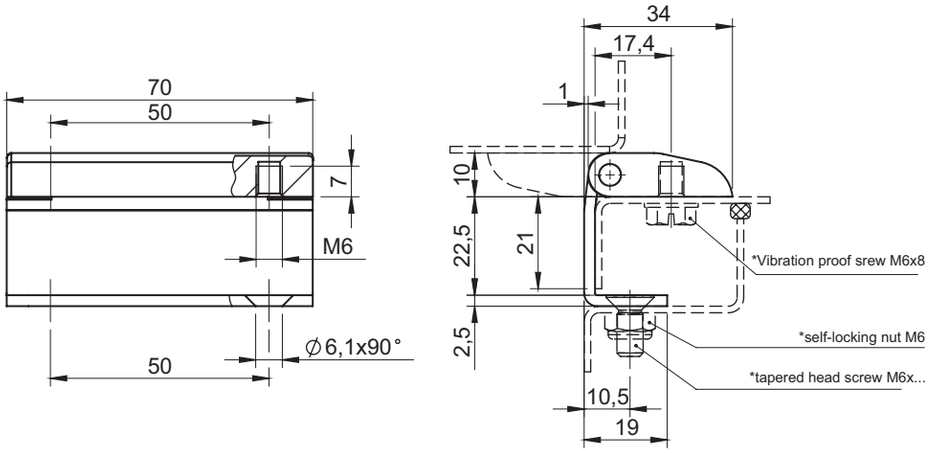

* - not included, to be ordered separately

CATALOGUE NUMBER	COMPONENTS	MATERIAL	FINISH [C]	
			RAL9005	RAL7035
3.ZN154.009	Holder	ZAMAK 5	04	05
	Base	Steel		
	Pin	Stainless steel	-	-

How to order:

Catalogue number — 3.ZN154.009

Finish [C] — 04

Internal hinges

Hinge 3.ST4-1, 3.ST4

stainless steel

y

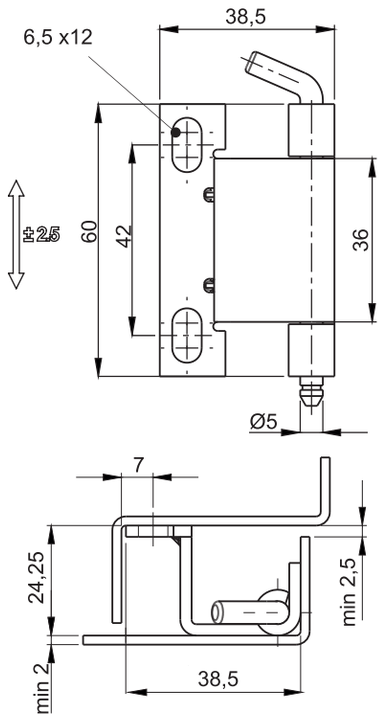

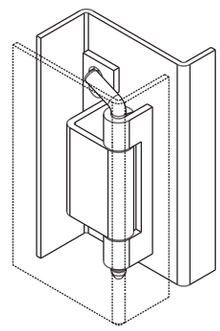

CATALOGUE NUMBER	COMPONENTS	MATERIAL
3.ST4-1.001	Base, Pin	Steel zinc plated
	Holder	Steel
3.ST4-1.001SN	Holder, Base, Pin	Stainless steel

stainless steel

y

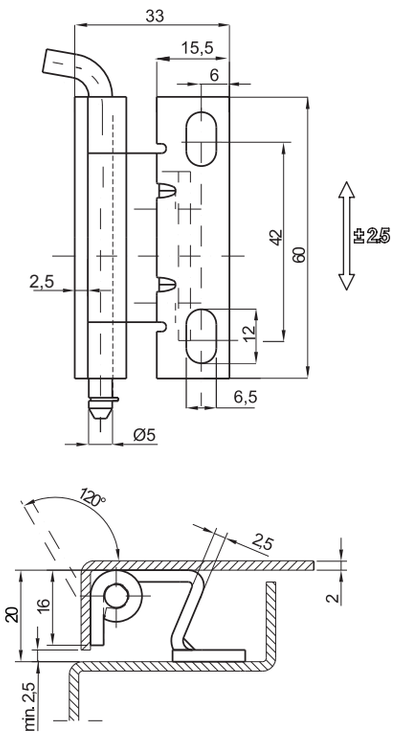

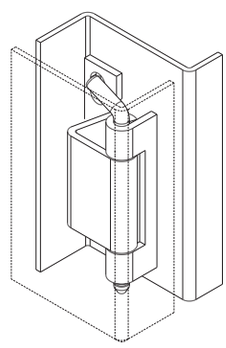

CATALOGUE NUMBER	COMPONENTS	MATERIAL
3.ST4.001	Base, Pin	Steel zinc plated
	Holder	Steel
3.ST4.001SN	Holder, Base, Pin	Stainless steel

stainless steel

y

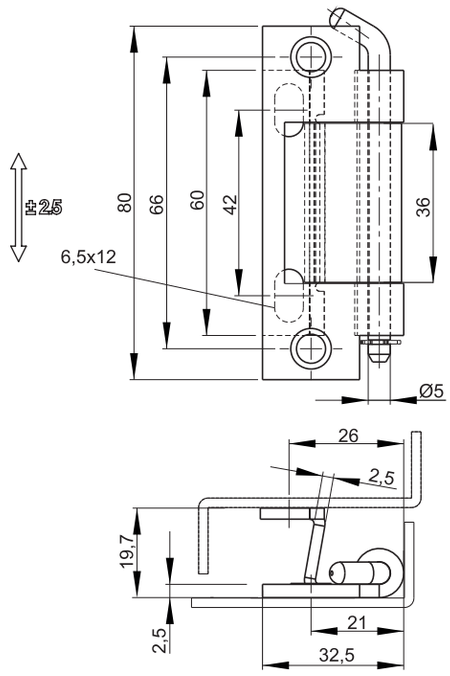

CATALOGUE NUMBER	COMPONENTS	MATERIAL
3.ST4-2.001	Holder, Base, Pin	Steel zinc plated
3.ST4-2.001SN	Holder, Base, Pin	Stainless steel

stainless steel

y

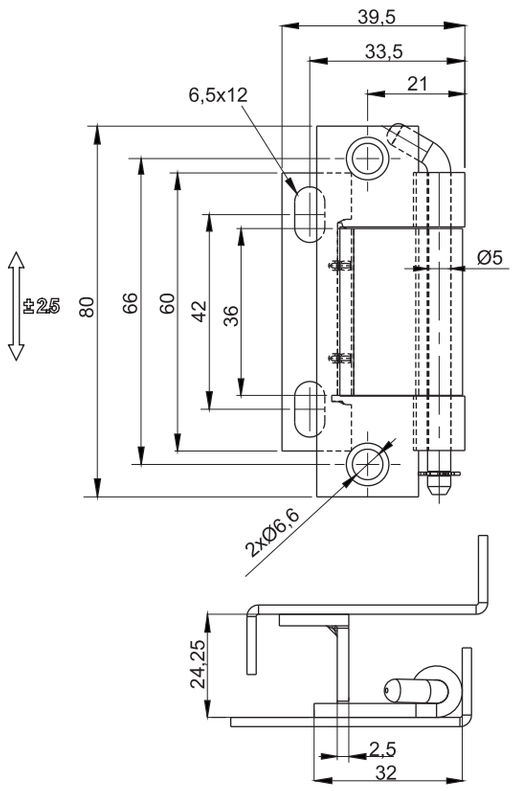

CATALOGUE NUMBER	COMPONENTS	MATERIAL
3.ST4-4.001	Holder, Base, Pin	Steel zinc plated
3.ST4-4.001SN	Holder, Base, Pin	Stainless steel

Hinge 3.ST27, 3.ST27-1, 3.ST54

ROZTOCZE

stainless steel

y

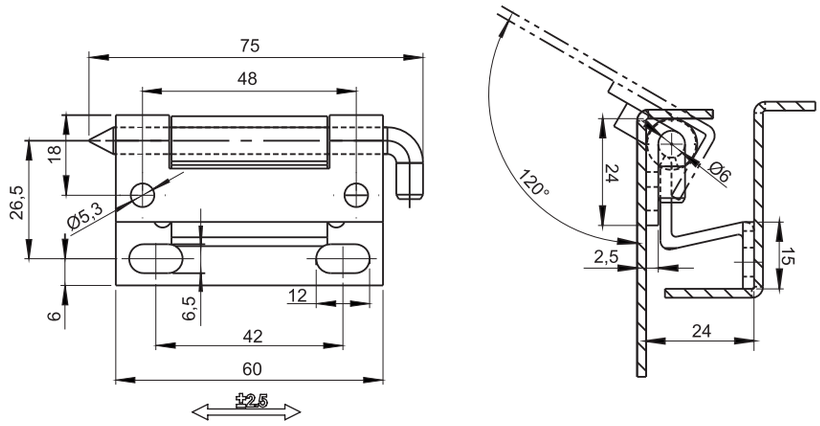

CATALOGUE NUMBER	COMPONENTS	MATERIAL
3.ST27.001	Holder, Base, Pin	Steel zinc plated
3.ST27.001SN	Holder, Base, Pin	Stainless steel

stainless steel

y

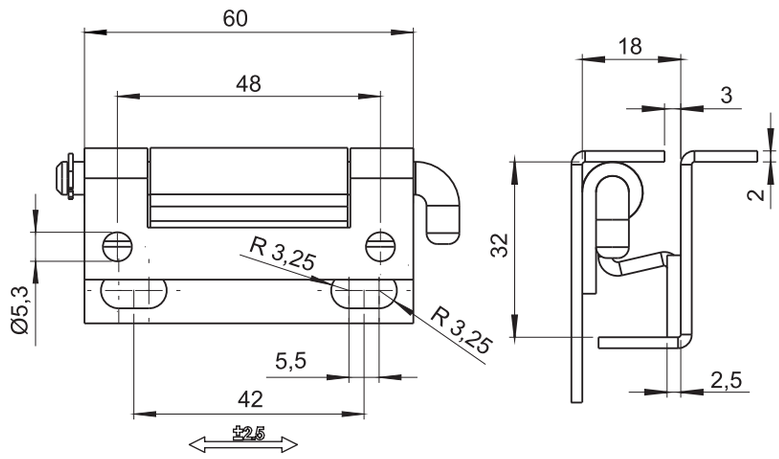

CATALOGUE NUMBER	COMPONENTS	MATERIAL
3.ST27-1.001	Holder, Base, Pin	Steel zinc plated
3.ST27-1.001SN	Holder, Base, Pin	Stainless steel

stainless steel

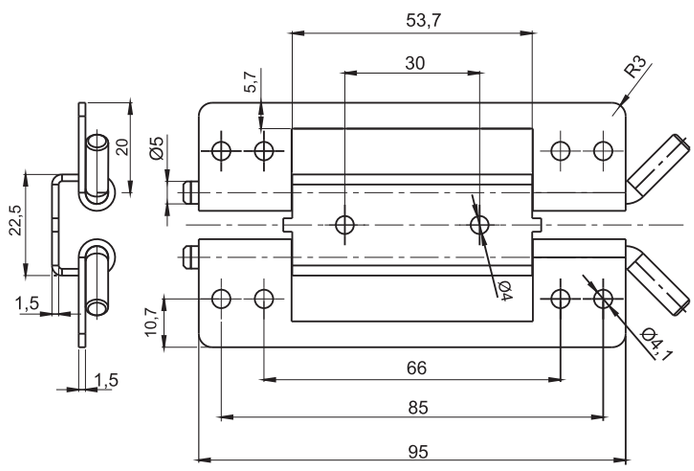

CATALOGUE NUMBER	COMPONENTS	MATERIAL
3.ST54.001	Holder, Base, Pin	Steel zinc plated
3.ST54.001SN	Holder, Base, Pin	Stainless steel

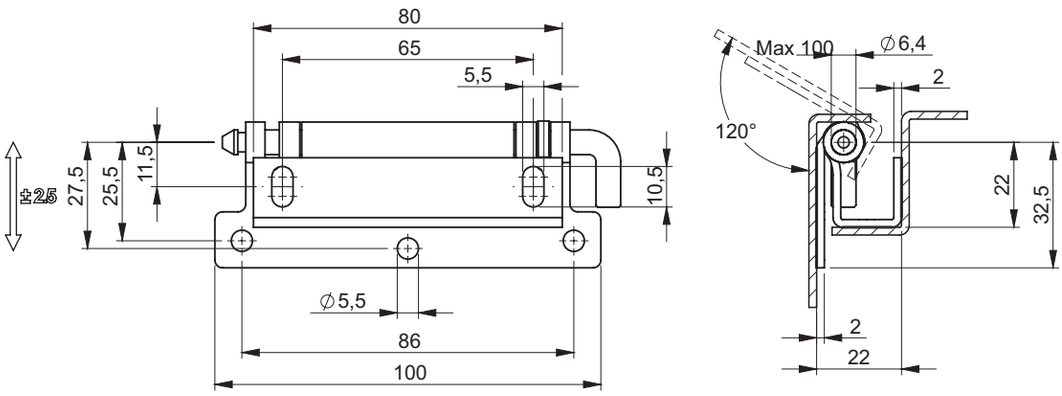

CATALOGUE NO.	COMPONENTS	MATERIAL
3.ST115.001	Holder, Base, Pin	Steel zinc plated
	Blockade	POM
3.ST115.001SN	Holder, Base, Pin	Stainless steel
	Blockade	POM

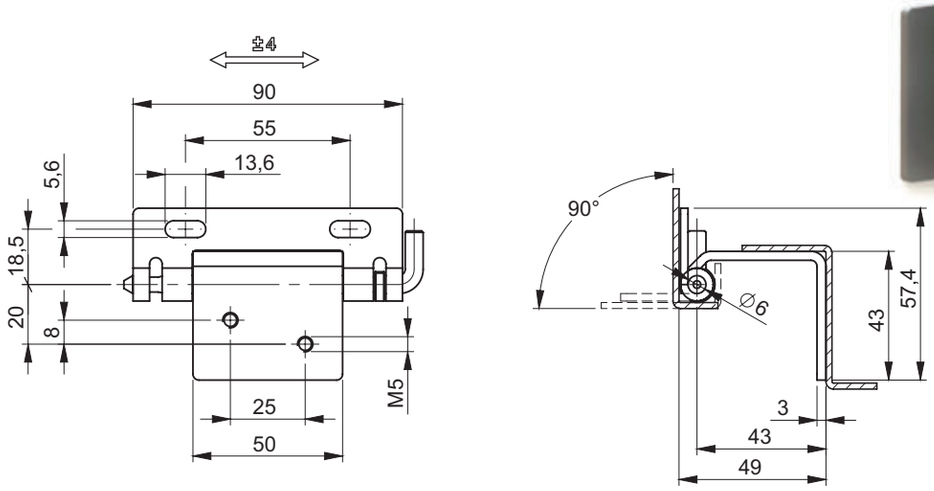

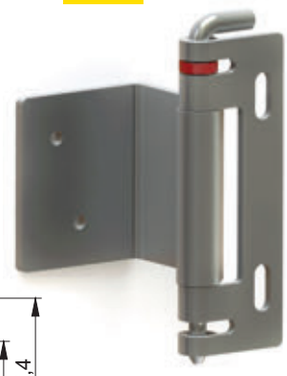

CATALOGUE NO.	COMPONENTS	MATERIAL
3.ST115.002	Holder, Base, Pin	Steel zinc plated
	Pin blockage	POM
3.ST115.002SN	Holder, Base, Pin	Stainless steel

Hinge 3.ST47, 3.ST13

stainless steel

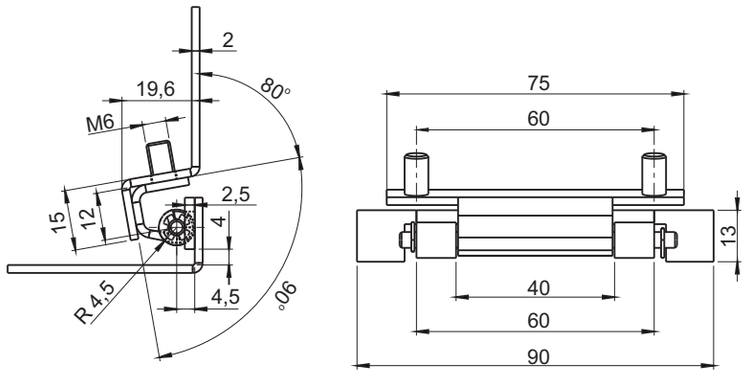

CATALOGUE NUMBER	COMPONENTS	MATERIAL
3.ST47.001	Base, Pin	Steel zinc plated
	Holder	Steel
3.ST47.001SN	Holder, Base, Pin	Stainless steel

stainless steel

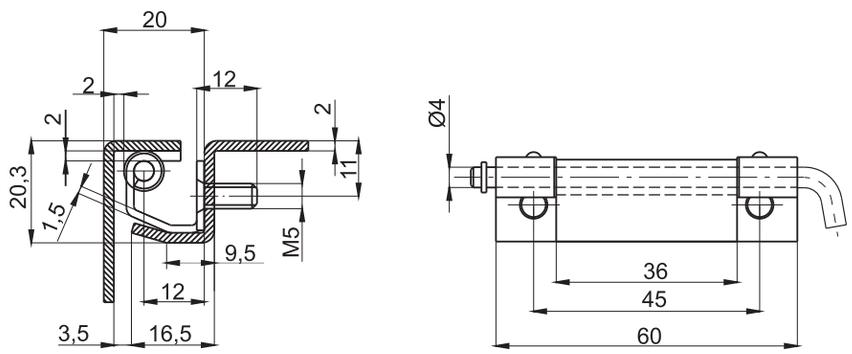

CATALOGUE NUMBER	COMPONENTS	MATERIAL
3.ST47.002	Base, Pin	Steel zinc plated
	Holder	Steel
3.ST47.002SN	Holder, Base, Pin	Stainless steel

stainless steel

3.ST13.002

3.ST13.001

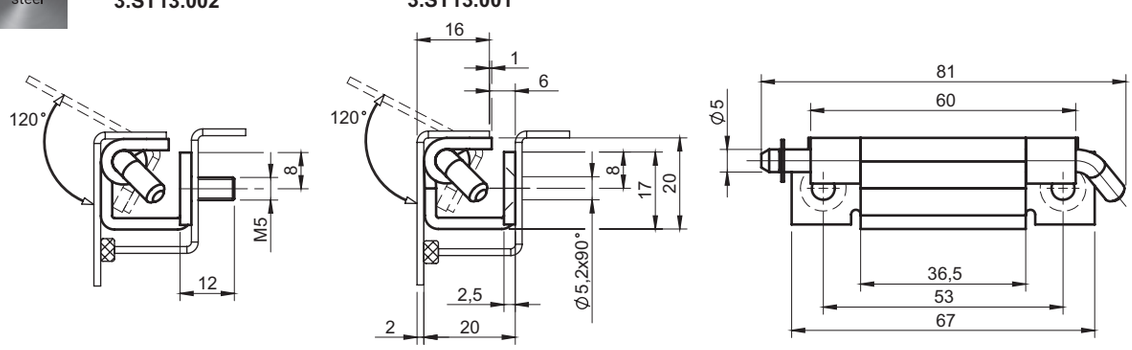

CATALOGUE NUMBER	COMPONENTS	MATERIAL
3.ST13.001 3.ST13.002	Base, Pin	Steel zinc plated
	Holder	Steel
3.ST13.001SN 3.ST13.002SN	Holder, Base, Pin	Stainless steel

3.ST16.001

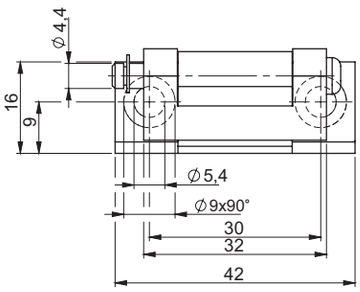

3.ST16.001 SN

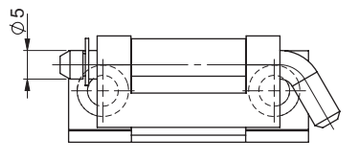

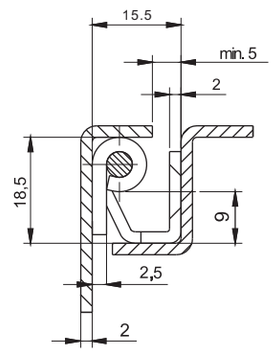

stainless steel

CATALOGUE NUMBER	COMPONENTS	MATERIAL
3.ST16.001	Base, Pin	Steel zinc plated
	Holder	Steel
3.ST16.001SN	Holder, Base, Pin	Stainless steel

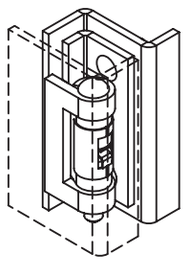

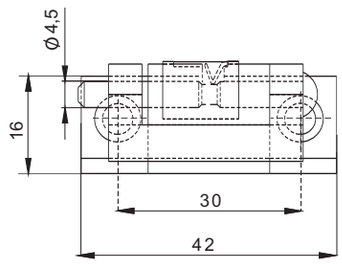

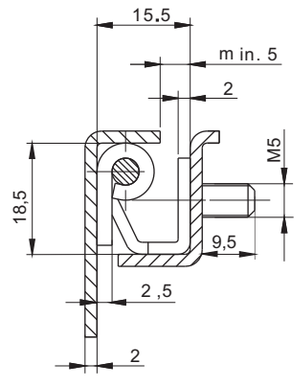

stainless steel

CATALOGUE NUMBER	COMPONENTS	MATERIAL
3.ST16.004	Holder	Steel
	Base, Pin	Steel zinc plated
	Spring	Stainless steel

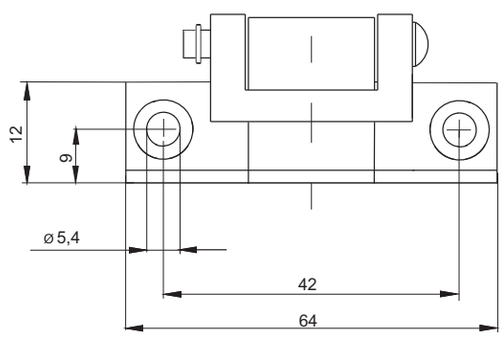

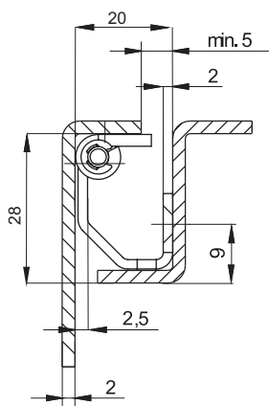

CATALOGUE NUMBER	COMPONENTS	MATERIAL
3.ST16.006	Base, Pin	Steel zinc plated
	Holder	Steel

Hinge 3.ST5, 3.ST6

ROZTOCZE

stainless steel

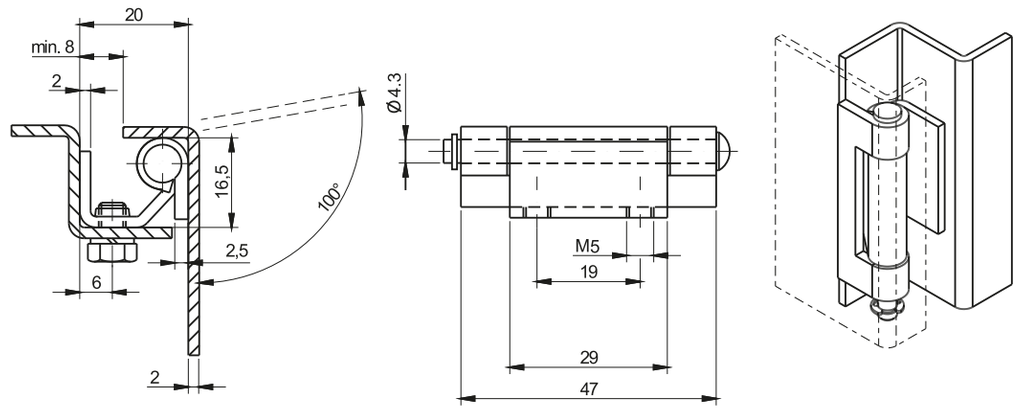

CATALOGUE NUMBER	COMPONENTS	MATERIAL
3.ST5.001	Base, Pin	Steel zinc plated
	Holder	Steel
3.ST5.001SN	Holder, Base, Pin	Stainless steel

stainless steel

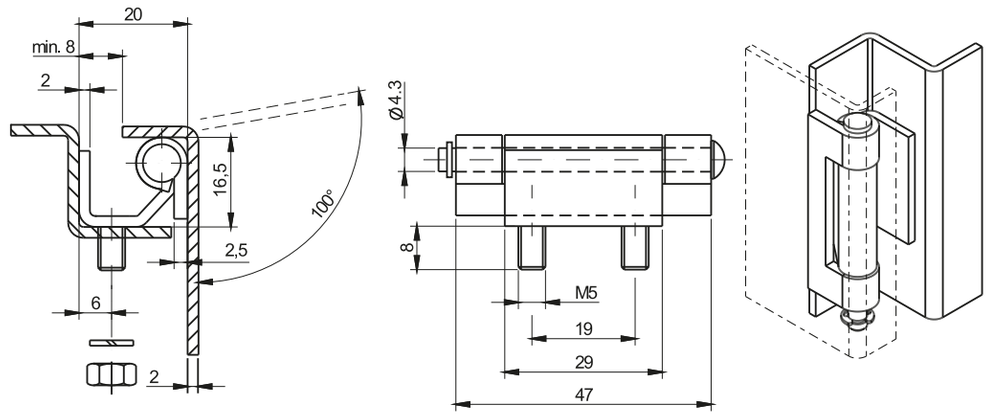

CATALOGUE NUMBER	COMPONENTS	MATERIAL
3.ST5.003	Base, Pin	Steel zinc plated
	Holder	Steel
3.ST5.003SN	Holder, Base, Pin	Stainless steel

stainless steel

Thickness [mm]	X
1,5	01
2	02
2,5	03

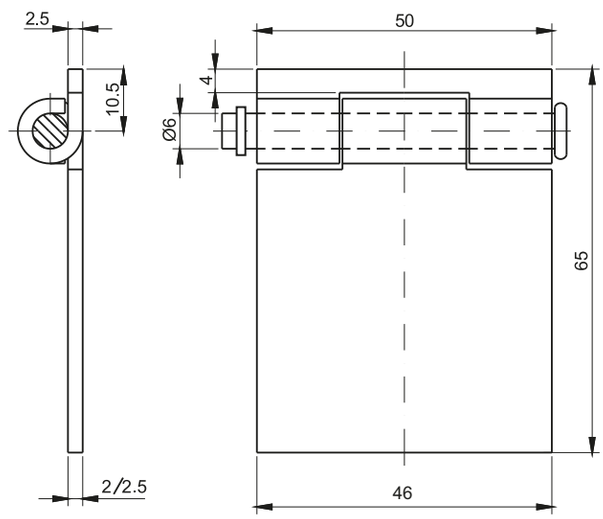

CATALOGUE NUMBER	COMPONENTS	MATERIAL
3.ST6.001.X	Holder, Base	Steel
	Pin	Steel zinc plated
3.ST6.001SN.X	Holder, Base, Pin	Stainless steel

stainless steel

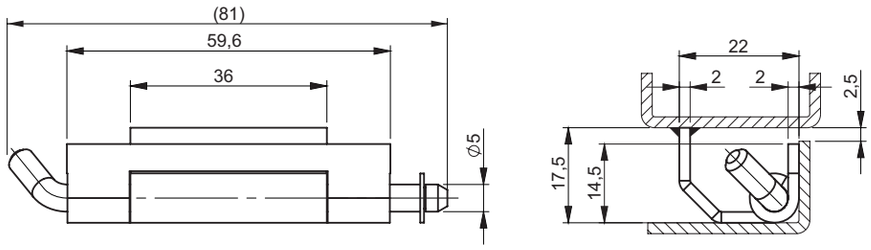

CATALOGUE NUMBER	COMPONENTS	MATERIAL
3.ST43.001	Holder	Steel
	Pin, Base	Steel
3.ST43.001SN	Holder, Base, Pin	Stainless steel

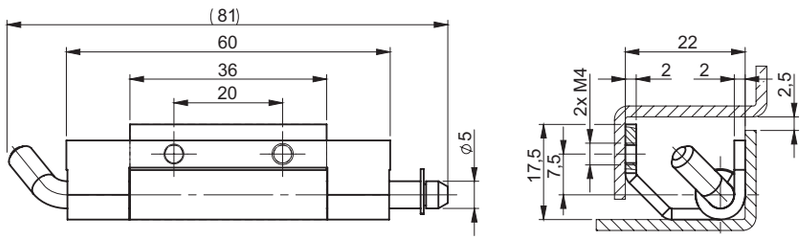

CATALOGUE NUMBER	COMPONENTS	MATERIAL
3.ST43.002	Holder	Steel
	Pin, Base	Steel zinc plated
3.ST43.002SN	Holder, Base, Pin	Stainless steel

stainless steel

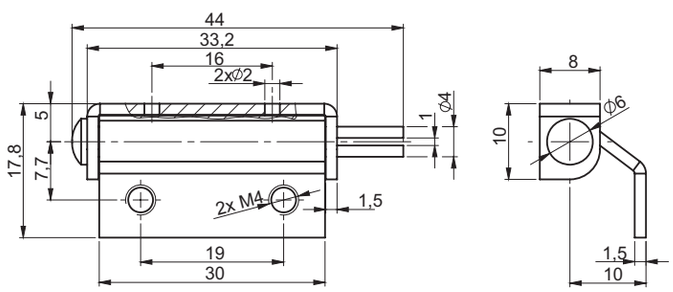

CATALOGUE NUMBER	COMPONENTS	MATERIAL
3.ST43-2.001	Holder, Base, Pin	Steel zinc plated
3.ST43-2.001SN	Holder, Base, Pin	Stainless steel

Hinge 3.ST43

stainless steel

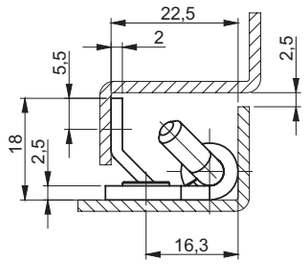

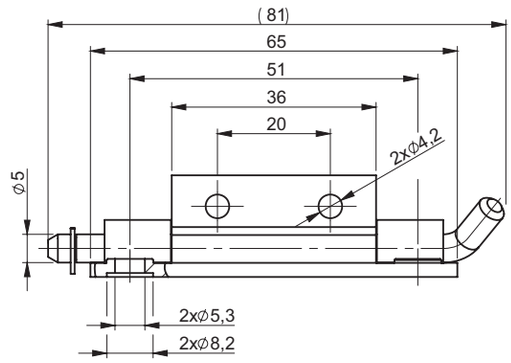

CATALOGUE NUMBER	COMPONENTS	MATERIAL
3.ST43.003	Holder, Pin	Steel zinc plated
	Base	Steel zinc plated
3.ST43.003SN	Holder, Base, Pin	Stainless steel

stainless steel

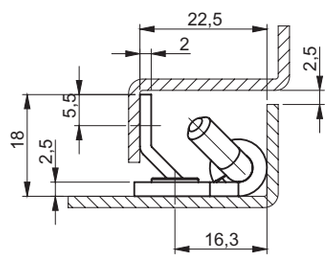

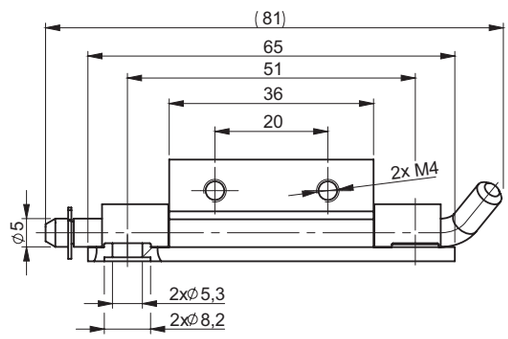

CATALOGUE NUMBER	COMPONENTS	MATERIAL
3.ST43.004*	Holder, Pin	Steel zinc plated
	Base	Steel znic plated
3.ST43.004SN	Holder, Base, Pin	Stainless steel

* - possibility to order the hinge version without cover

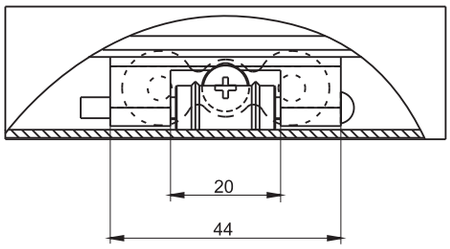

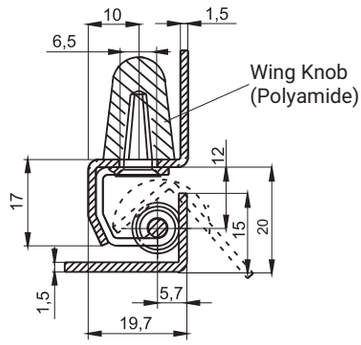

stainless steel

CATALOGUE NUMBER	COMPONENTS	MATERIAL
3.ST32.001	Base, Pin	Steel zinc plated
	Holder	Steel
3.ST32.001SN	Holder, Base, Pin	Stainless steel

stainless steel

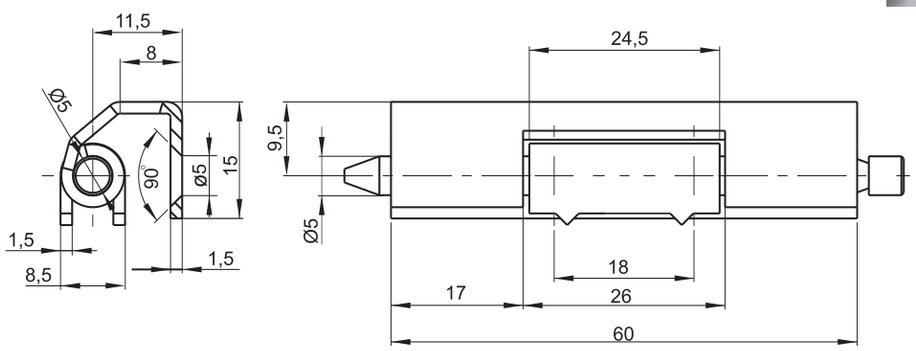

CATALOGUE NUMBER	COMPONENTS	MATERIAL
3.ST32.003	Base, Pin	Steel zinc plated
	Holder	Steel
3.ST32.003SN	Holder, Base, Pin	Stainless steel

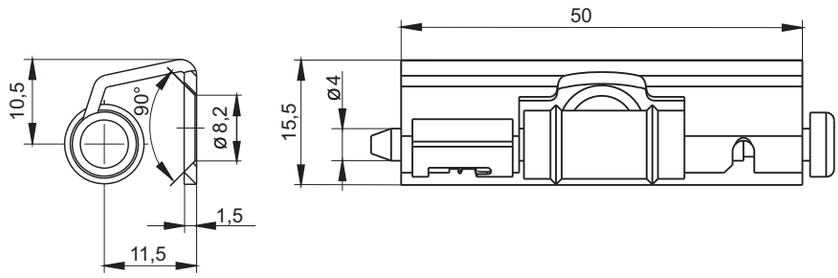

CATALOGUE NUMBER	COMPONENTS	MATERIAL
3.ST32.005	Base, Pin	Steel zinc plated
	Holder	Steel

Hinge 3.ST12, 3.ST12-2

stainless steel

x

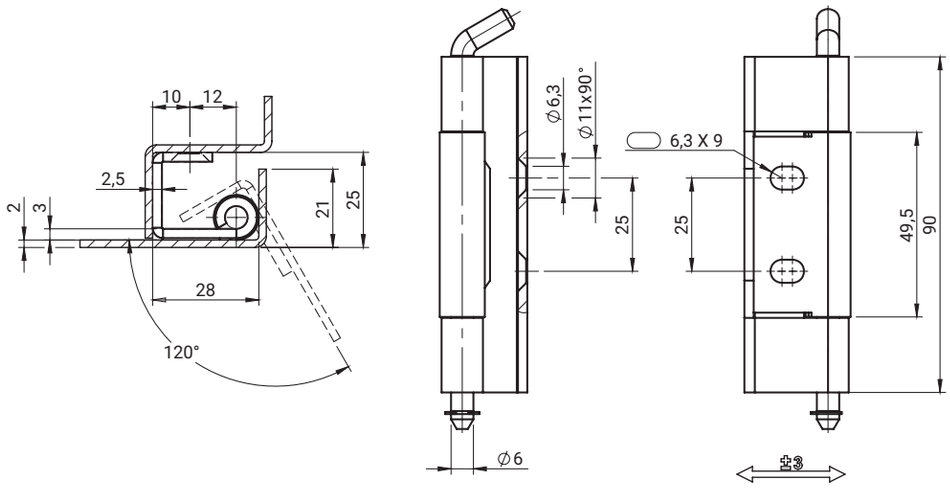

CATALOGUE NUMBER	COMPONENTS	MATERIAL
3.ST12.001	Holder, Base, Pin	Steel zinc plated
3.ST12.001SN	Holder, Base, Pin	Stainless steel

stainless steel

x

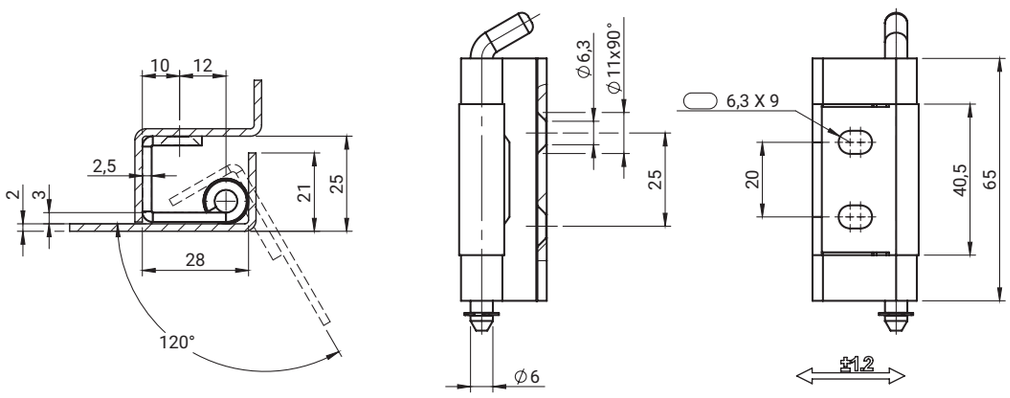

CATALOGUE NUMBER	COMPONENTS	MATERIAL
3.ST12-2.001	Holder, Base, Pin	Steel zinc plated
3.ST12-2.001SN	Holder, Base, Pin	Stainless steel

stainless steel

x

3.ST12B.001 **3.ST12B.002** **3.ST12B.003**

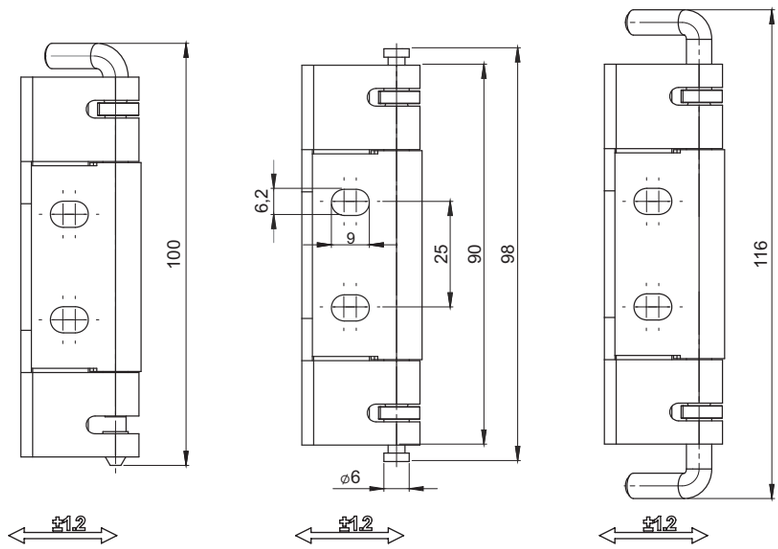

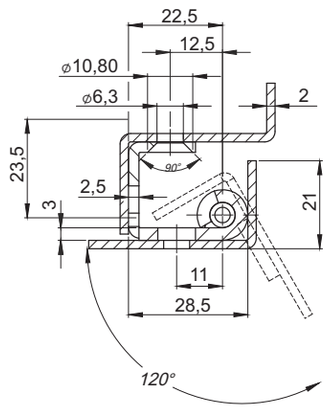

CATALOGUE NO.	COMPONENTS	MATERIAL
3.ST12B.001 **3.ST12B.002** **3.ST12B.003**	Holder, Base, Pin	Steel zinc plated
	Blockade	POM
3.ST12B.001SN **3.ST12B.002SN** **3.ST12B.003SN**	Holder, Base, Pin	Stainless steel
	Blockade	POM

stainless steel

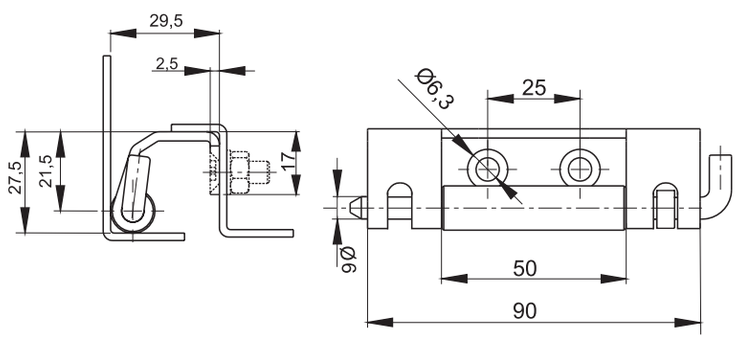

CATALOGUE NUMBER	COMPONENTS	MATERIAL
3.ST12-1B.001	Holder, Base, Pin	Steel zinc plated
	Blocade	POM
3.ST12-1B.001SN	Holder, Base, Pin	Stainless steel

Hinge 3.ST12-1, 3.ST76

stainless steel

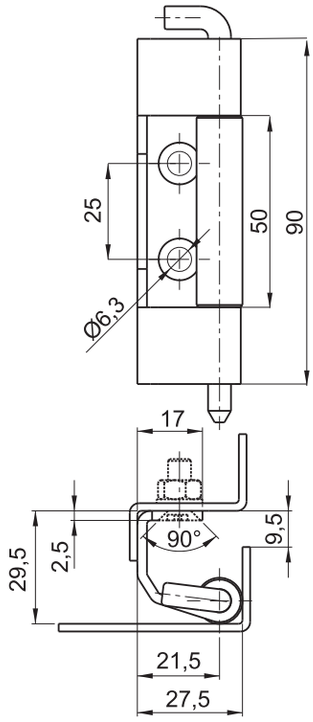

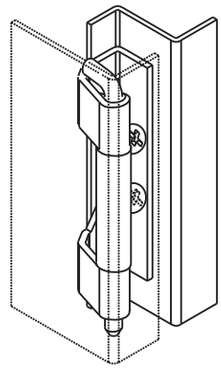

CATALOGUE NUMBER	COMPONENTS	MATERIAL
3.ST12-1.001	Base, Pin	Steel zinc plated
	Holder	Steel
3.ST12-1.001SN	Holder, Base, Pin	Stainless steel

stainless steel

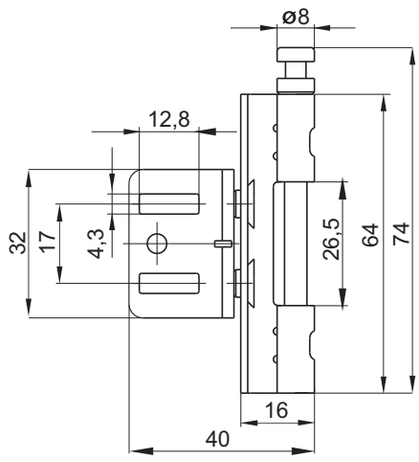

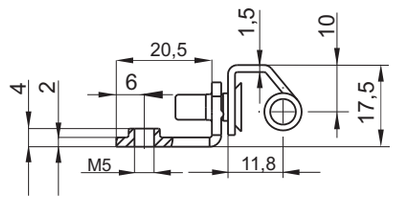

CATALOGUE NUMBER	COMPONENTS	MATERIAL
3.ST76.001	Holder, Base, Pin	Steel zinc plated
3.ST76.001SN	Holder, Base, Pin	Stainless steel

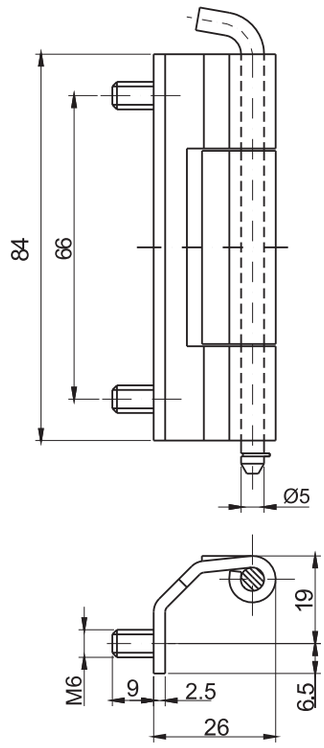

stainless steel

CATALOGUE NUMBER	COMPONENTS	MATERIAL
3.ST19-2.001	Base, Pin	Steel zinc plated
	Holder	Steel
3.ST19-2.001SN	Holder, Base, Pin	Stainless steel

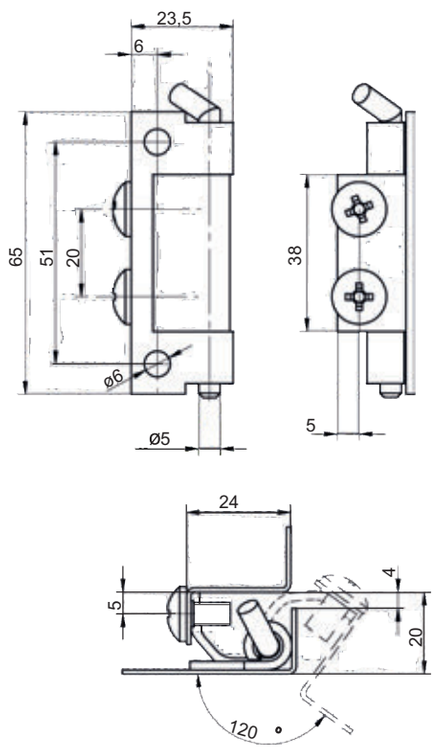

stainless steel

CATALOGUE NUMBER	COMPONENTS	MATERIAL
3.537.001	Holder, Base, Pin	Steel zinc plated
3.537.001SN	Holder, Base, Pin	Stainless steel

Hinge 3.ST556, 3.ST557

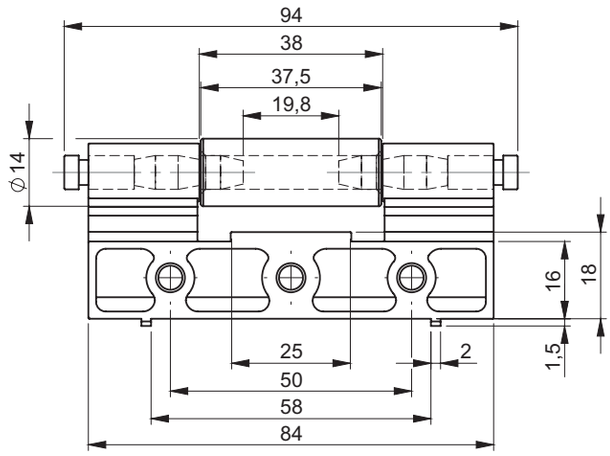

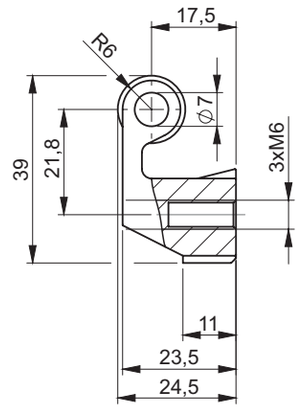

CATALOGUE NUMBER	COMPONENTS	MATERIAL	FINISH [C]
			RAL 9005
3.ST556.001	Holder	ZAMAK 5	04
	Base, Pin	Steel zinc plated	

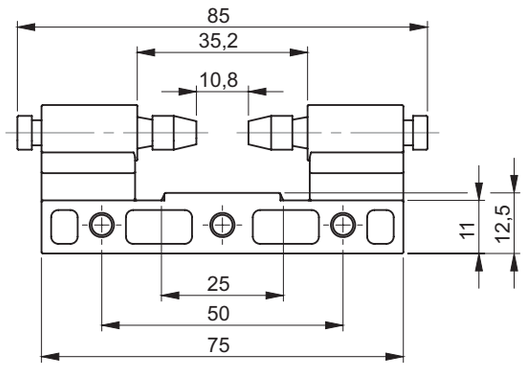

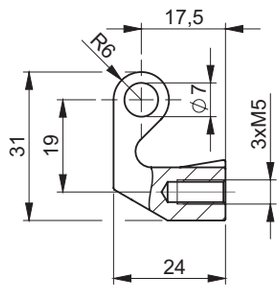

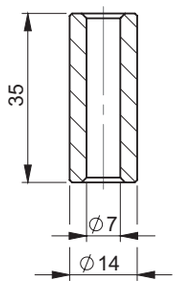

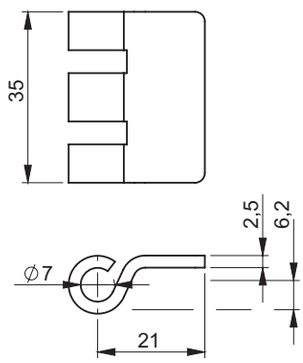

3.ST557.001 3.ST557.002

CATALOGUE NUMBER	DETAIL	COMPONENTS	MATERIAL	FINISH [C]
				RAL 9005
3.ST557.001	ver. with a bushing	Base	ZAMAK 5	04
3.ST557.002	ver. with a sheet metal	Holder, Pin	Steel zinc plated	

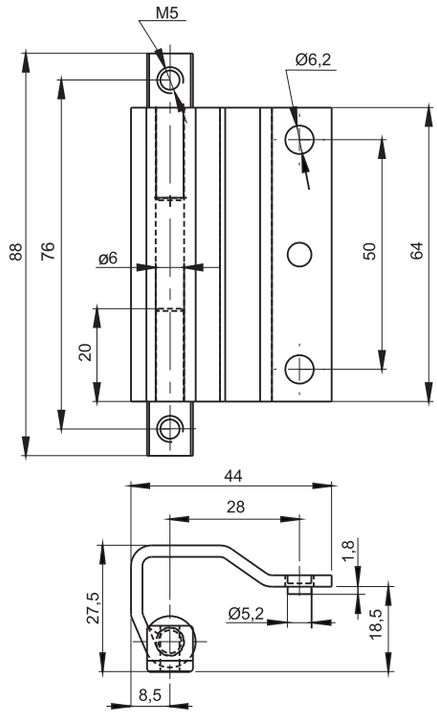

CATALOGUE NUMBER	COMPONENTS	MATERIAL
3.ST40.001	Holder, Base, Pin	Steel zinc plated
3.ST40.001SN	Holder, Base, Pin	Sainless steel

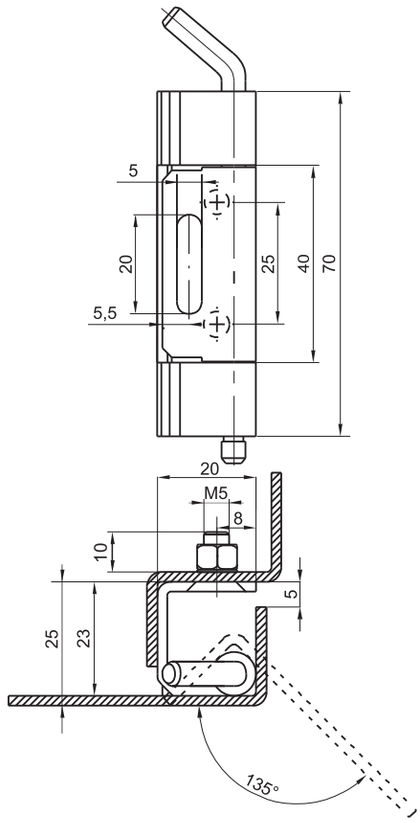

CATALOGUE NUMBER	COMPONENTS	MATERIAL
3.ST41.001	Base, Pin	Steel zinc plated
	Holder	Steel
3.ST41.001SN	Holder, Base, Pin	Sainless steel

Hinge 3.ST10, 3.ST11, 3.ST14, 3.ST15

stainless steel

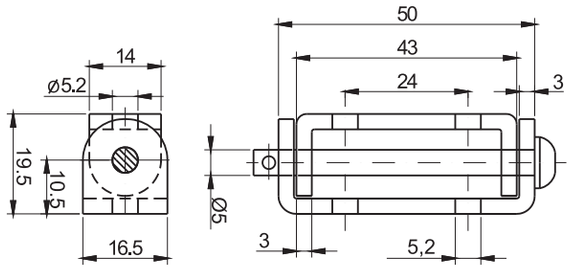

CATALOGUE NUMBER	COMPONENTS	MATERIAL
3.ST10.001	Holder, Base, Pin	Steel zinc plated
3.ST10.001SN	Holder, Base, Pin	Stainless steel

stainless steel

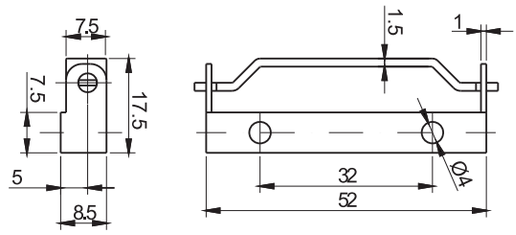

CATALOGUE NUMBER	COMPONENTS	MATERIAL
3.ST11.001	Base, Pin	Steel zinc plated
	Holder	Steel
3.ST11.001SN	Holder, Base, Pin	Sainless steel

stainless steel

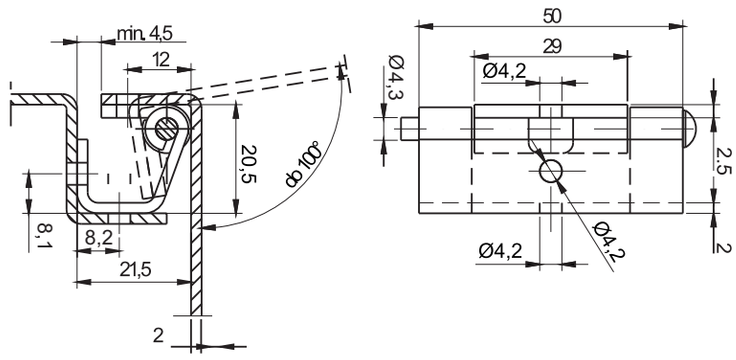

CATALOGUE NUMBER	COMPONENTS	MATERIAL
3.ST14.001	Holder, Base, Pin	Steel zinc plated
3.ST14.001SN	Holder, Base, Pin	Sainless steel

stainless steel

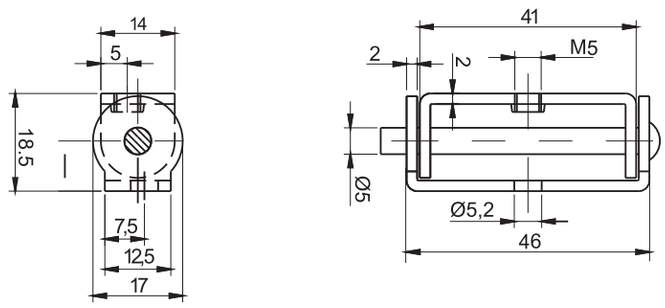

CATALOGUE NUMBER	COMPONENTS	MATERIAL
3.ST15.001	Holder, Base, Pin	Steel zinc plated
3.ST15.001SN	Holder, Base, Pin	Sainless steel

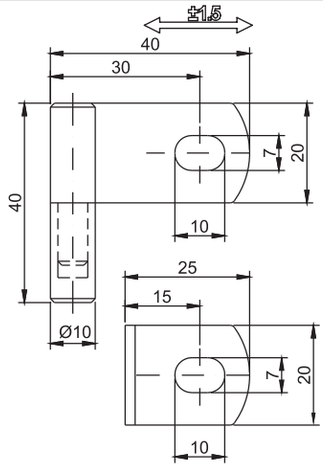

LEFT VERSION

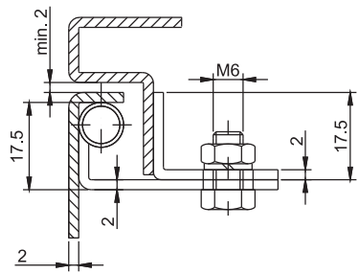

CATALOGUE NUMBER	COMPONENTS	MATERIAL
3.ST8.001	Fixed holder (screws)	Steel zinc plated
	Welded base	Steel
3.ST8.001SN	Holder, Base	Sainless steel

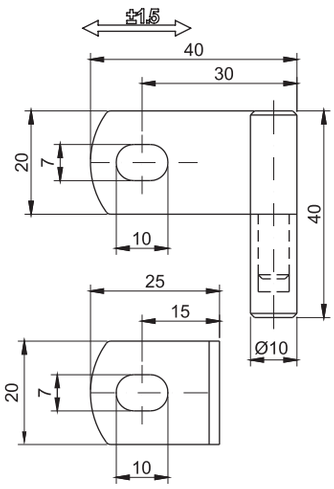

RIGHT VERSION

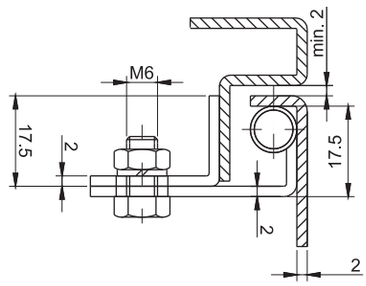

CATALOGUE NUMBER	COMPONENTS	MATERIAL
3.ST8.002	Fixed holder (screws)	Steel zinc plated
	Welded base	Steel
3.ST8.002SN	Holder, Base	Sainless steel

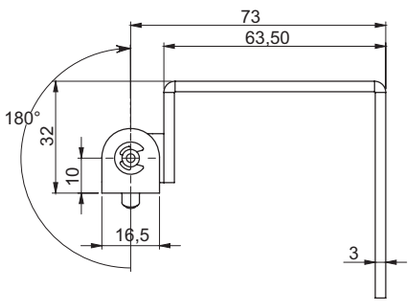

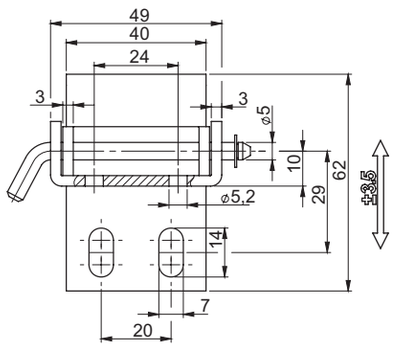

CATALOGUE NUMBER	COMPONENTS	MATERIAL
3.ST9.001	Holder, Base, Pin	Steel zinc plated
3.ST9.001SN	Holder, Base, Pin	Sainless steel

Hinge 3.ST31, 3.ST33, 3.ST34

ROZTOCZE

stainless steel

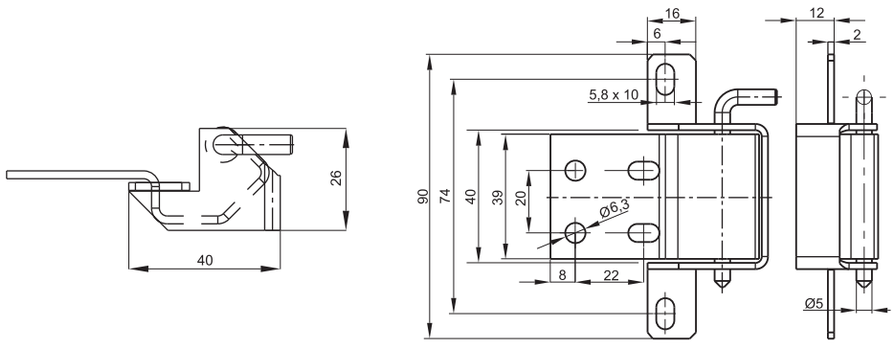

CATALOGUE NUMBER	COMPONENTS	MATERIAL
3.ST31.001	Holder, Base, Pin	Steel zinc plated
3.ST31.001SN	Holder, Base, Pin	Stainless steel

stainless steel

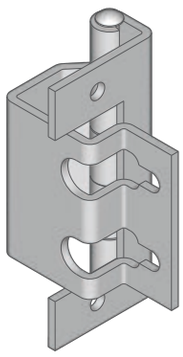

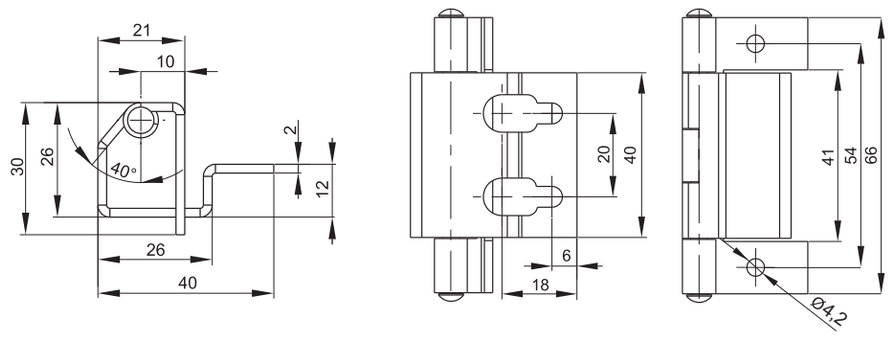

CATALOGUE NUMBER	COMPONENTS	MATERIAL
3.ST33.001	Holder, Base, Pin	Steel zinc plated
3.ST33.001SN	Holder, Base, Pin	Sainless steel

stainless steel

y

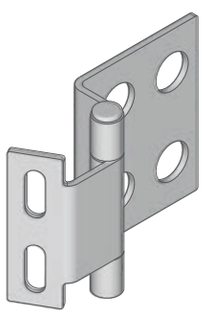

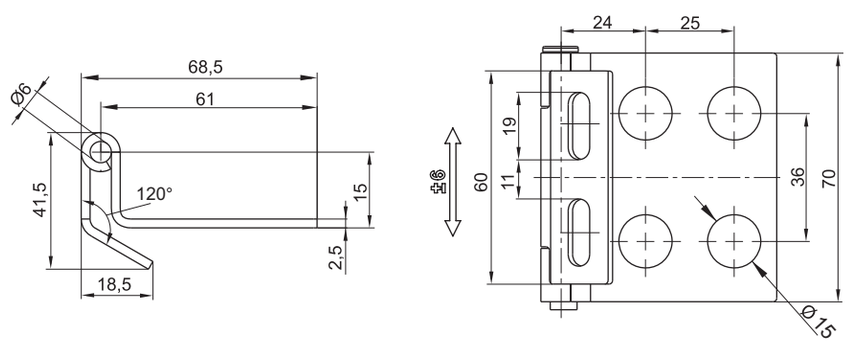

CATALOGUE NUMBER	COMPONENTS	MATERIAL
3.ST34.001	Holder, Base, Pin	Steel zinc plated
3.ST34.001SN	Holder, Base, Pin	Stainless steel

stainless steel

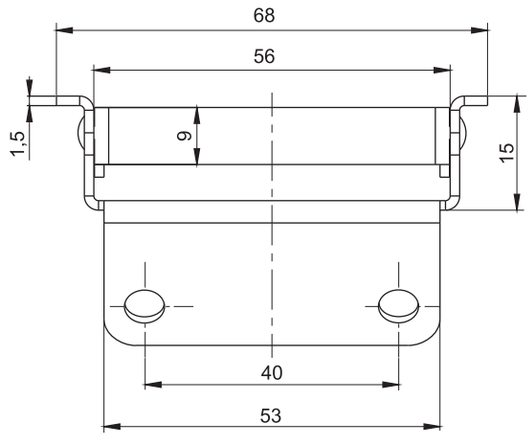

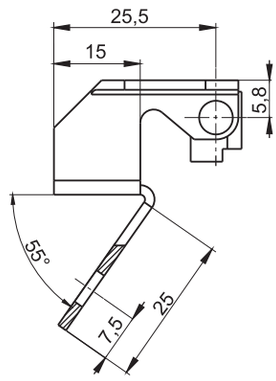

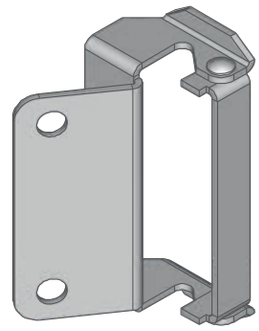

CATALOGUE NUMBER	COMPONENTS	MATERIAL
3.ST38.001	Holder, Base, Pin	Steel zinc plated
3.ST38.001SN	Holder, Base, Pin	Stainless steel

stainless steel

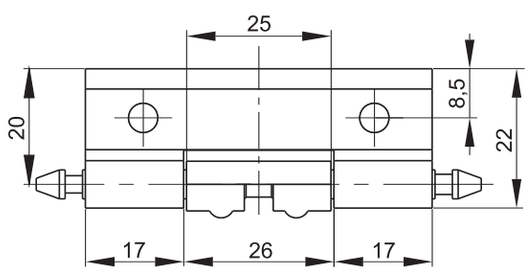

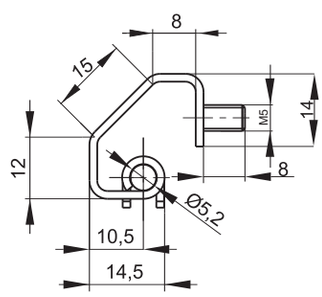

CATALOGUE NUMBER	COMPONENTS	MATERIAL
3.ST39.001	Base, Pin	Steel zinc plated
	Holder	Steel
3.ST39.001SN	Holder, Base, Pin	Stainless steel

Hinge 3.ST95, 3.ST120

stainless steel

x

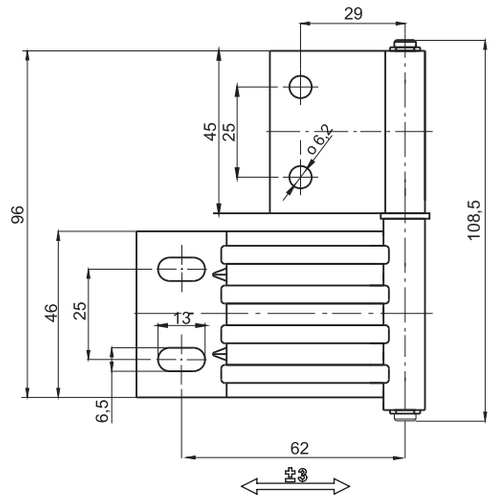

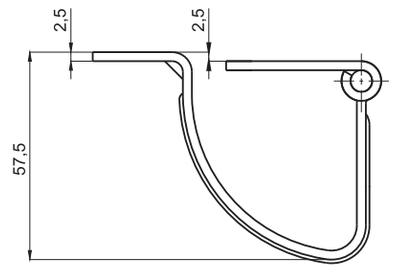

CATALOGUE NUMBER	COMPONENTS	MATERIAL
3.ST95.001	Holder, Base, Pin	Steel zinc plated
3.ST95.002SN	Holder, Base, Pin	Stainless steel

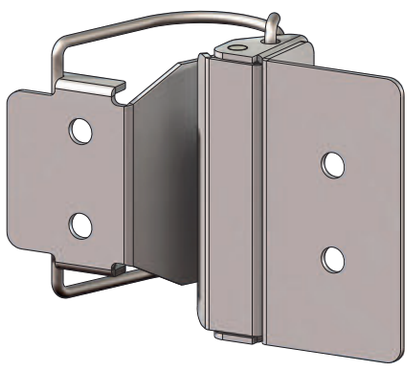

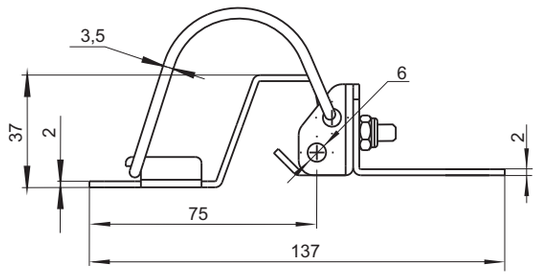

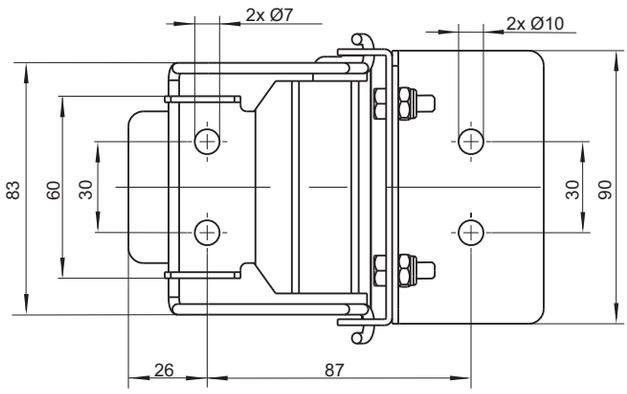

CATALOGUE NUMBER	MATERIAL
3.ST120.001SN	Stainless steel

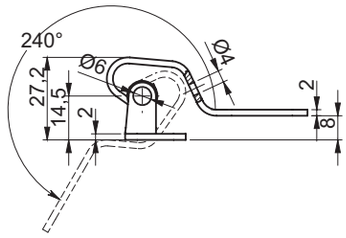

3.ST118.001

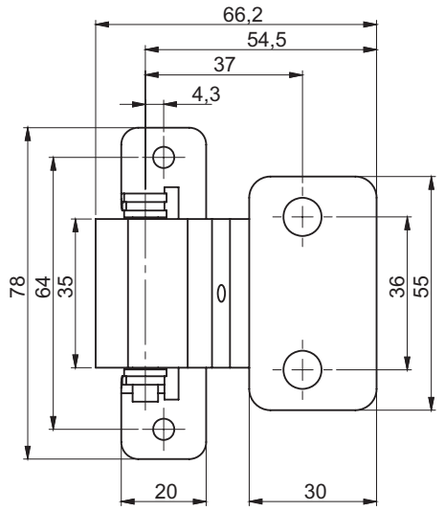

3.ST118.002

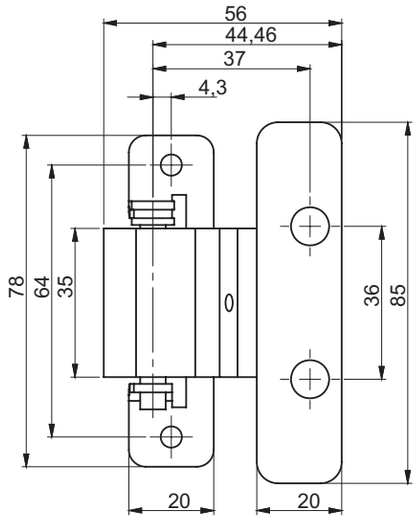

CATALOGUE NUMBER	COMPONENTS	MATERIAL	FINISH [C]
			RAL 9005
3.ST118.001	Holder, Base,	Steel zinc plated	04
	Pin	Stainless steel	
3.ST118.001SN	Holder, Base, Pin	Stainless steel	
3.ST118.002	Holder, Base	Steel zinc plated	
	Pin	Stainless steel	
3.ST118.002SN	Holder, Base, Pin	Stainless steel	

A - slide bushings made of plastics (POM)

Hinge 3.ST121, 3.ST119

ROZTOCZE

stainless steel

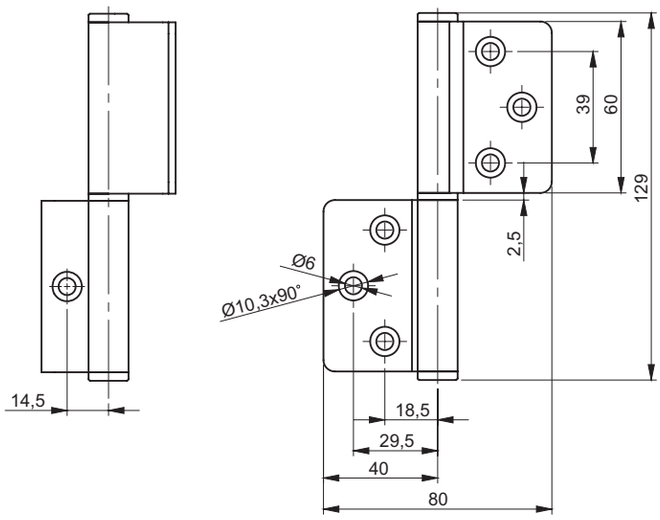

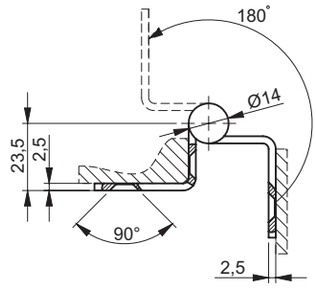

CATALOGUE NUMBER	COMPONENTS	MATERIAL
3.ST121.001	Holder, Base, Pin	Steel zinc plated
3.ST121.001SN	Holder, Base, Pin	Stainless steel

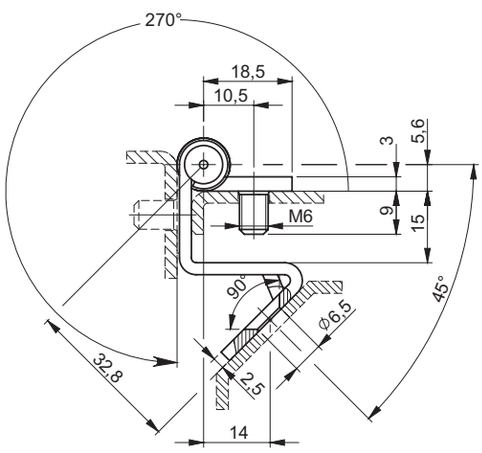

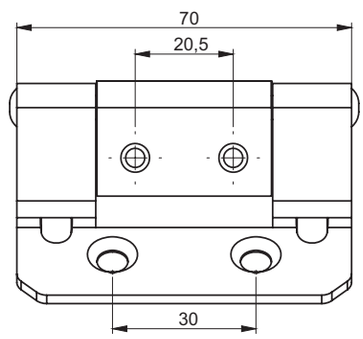

CATALOGUE NUMBER	COMPONENTS	MATERIAL
3.ST119.001	Holder, Base	Steel zinc plated
	Pin	Stainless steel

Hinge 3.ST105, 3.ST112

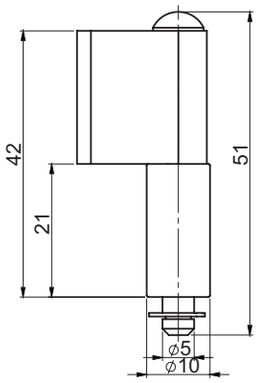

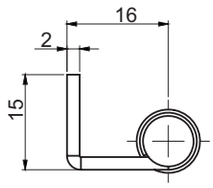

CATALOGUE NUMBER	COMPONENTS	MATERIAL
3.ST105.001	Holder, Base	Steel
	Pin	Steel zinc plated

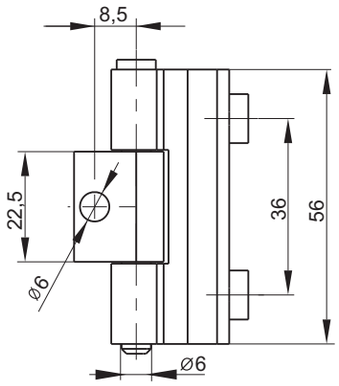

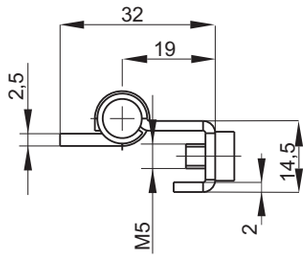

Two screws in the set DIN 7985 M5x6

CATALOGUE NUMBER	COMPONENTS	MATERIAL
3.ST112.001	Base, Pin	Steel zinc plated
	Holder	Copper-clad steel

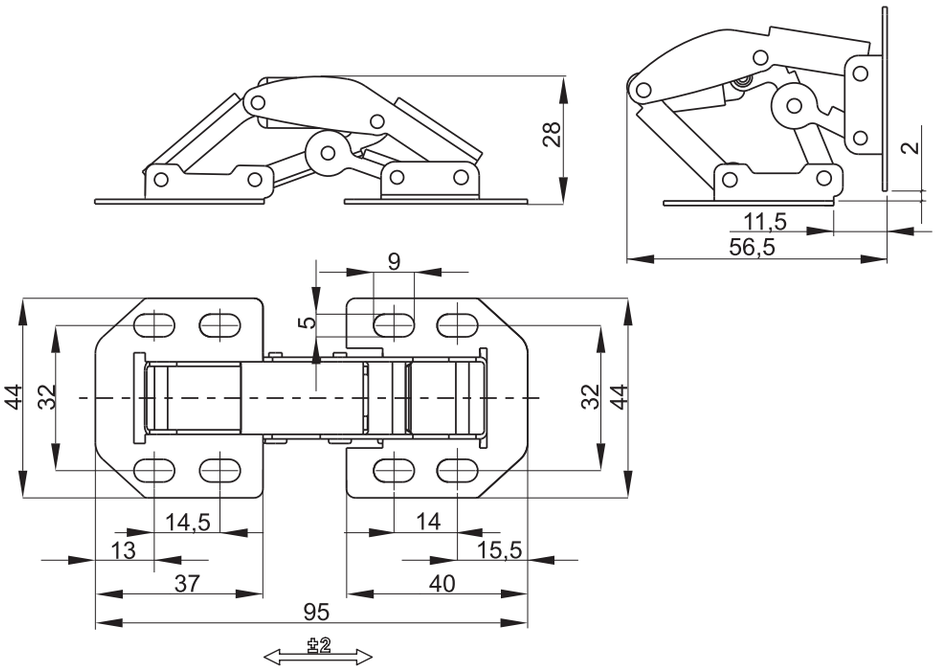

CATALOGUE NUMBER	COMPONENTS	MATERIAL
3.ST100.001	Base, Pin, Rivet	Steel zinc plated
3.ST100.001SN	Base, Pin, Rivet	Stainless steel

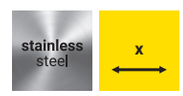

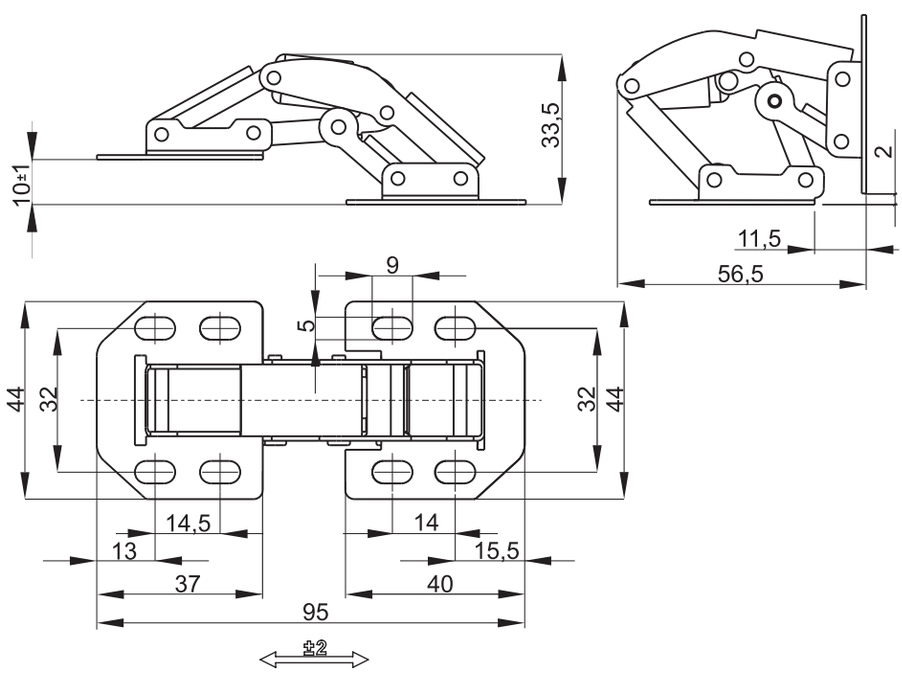

CATALOGUE NUMBER	COMPONENTS	MATERIAL
3.ST100.002	Base, Pin, Rivet	Steel zinc plated
3.ST100.002SN	Base, Pin, Rivet	Stainless steel

Hinge 3.ST46

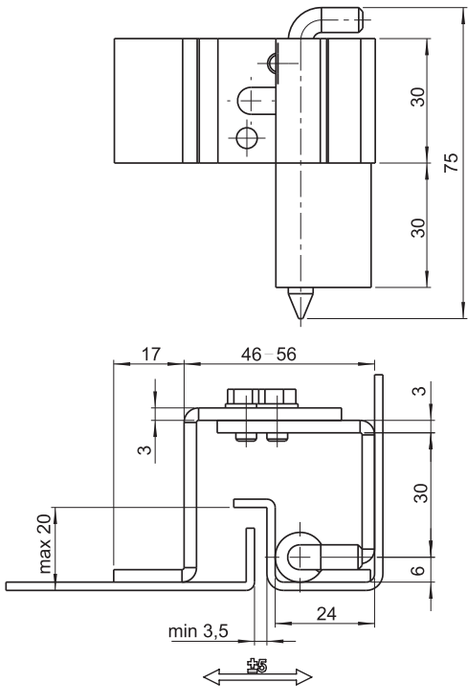

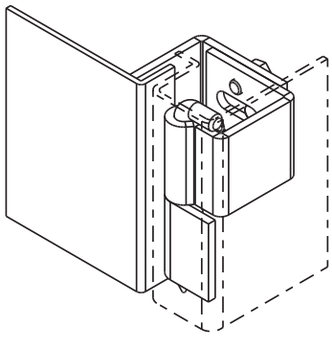

CATALOGUE NUMBER	COMPONENTS	MATERIAL
3.ST46.001	Holder,Pin	Steel zinc plated
	Base	Steel
3.ST46.001SN	Holder, Base, Pin	Stainless steel

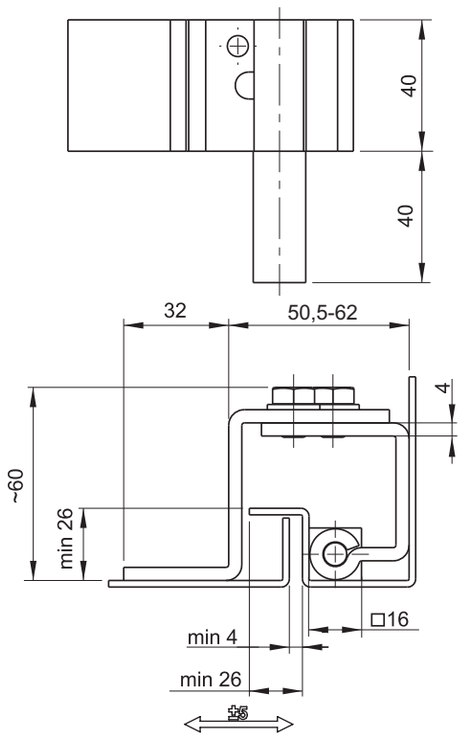

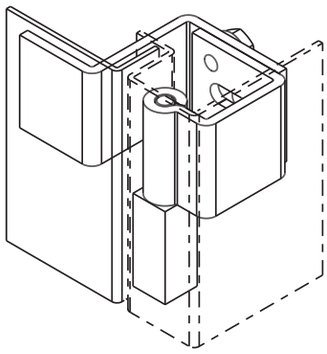

CATALOGUE NUMBER	COMPONENTS	MATERIAL
3.ST46-2.001	Holder	Steel
	Base	Steel zinc plated
3.ST46-2.001SN	Holder, Base, Pin	Stainless steel

stainless steel

x

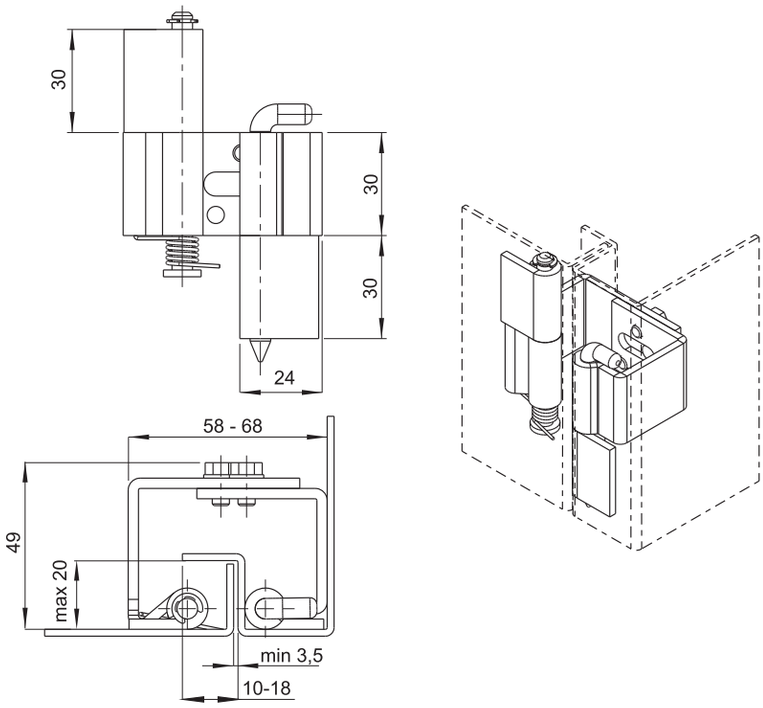

CATALOGUE NUMBER	COMPONENTS	MATERIAL
3.ST46-3.002	Holder, Pin	Steel zinc plated
	Base	Steel zinc plated
3.ST46-3.002SN	Holder, Base, Pin	Stainless steel

stainless steel

y

x

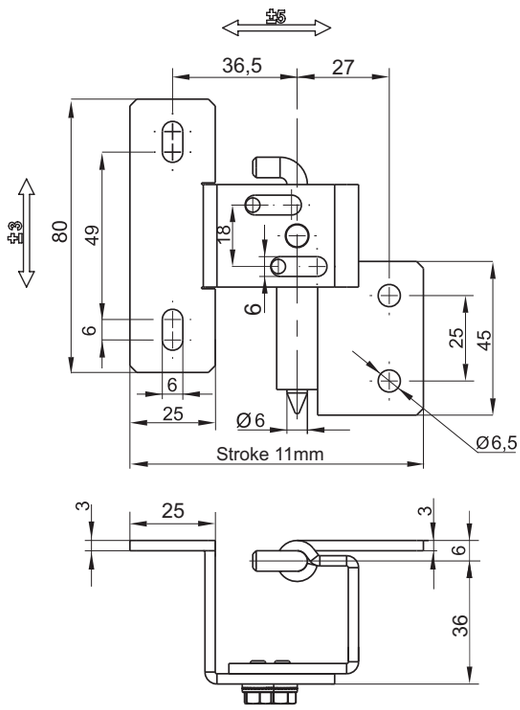

CATALOGUE NUMBER	COMPONENTS	MATERIAL
3.ST46-4.001	Holder, Base, Pin	Steel zinc plated
3.ST46-4.001SN	Holder, Base, Pin	Stainless steel

Hinge 3.ST20

ROZTOCZE

stainless steel

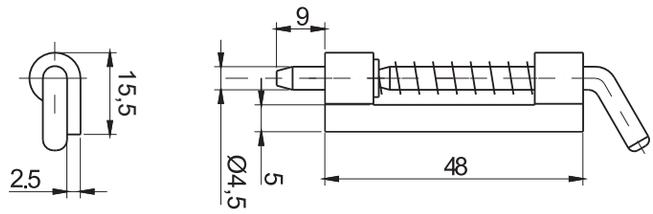

CATALOGUE NUMBER	COMPONENTS	MATERIAL
3.ST20.001	Holder	Steel
	Pin, Spring	Steel zinc plated
	Spring	Stainless steel
3.ST20.001SN	Holder, Pin, Spring	Stainless steel

stainless steel

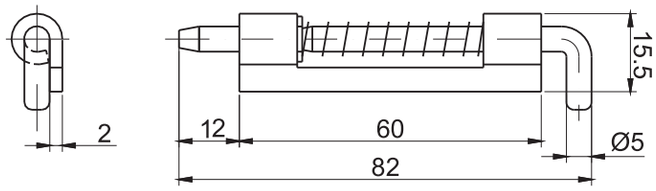

CATALOGUE NUMBER	COMPONENTS	MATERIAL
3.ST20.002	Holder	Steel
	Pin, Spring	Steel zinc plated
3.ST20.002SN	Holder, Pin, Spring	Stainless steel

stainless steel

Version A **Version B**

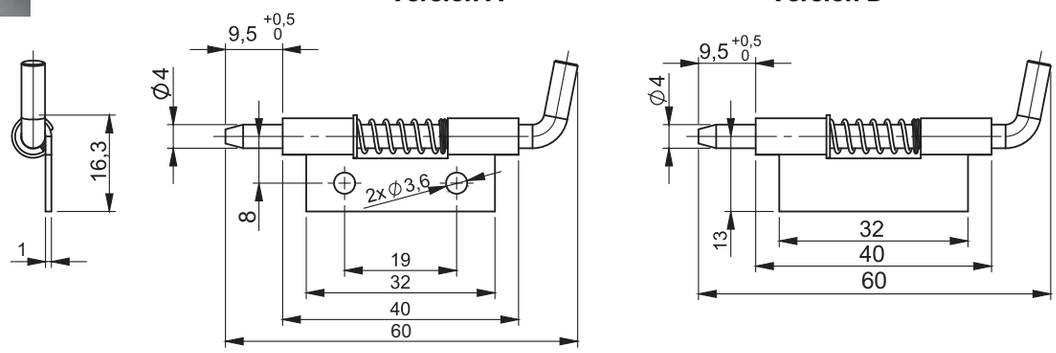

CATALOGUE NUMBER	VERSION	COMPONENTS	MATERIAL
3.ST20.003	A	Holder, Pin, Spring	Steel zinc plated
		Spring	Stainless steel
3.ST20.003SN	A	Holder, Pin, Spring	Stainless steel
3.ST20.003	B	Holder	Steel
		Pin	Steel zinc plated
		Spring	Stainless steel
3.ST20.003SN	B	Holder, Pin, Spring	Stainless steel

How to order: 3.ST20.003 — A

Catalogue number

Version

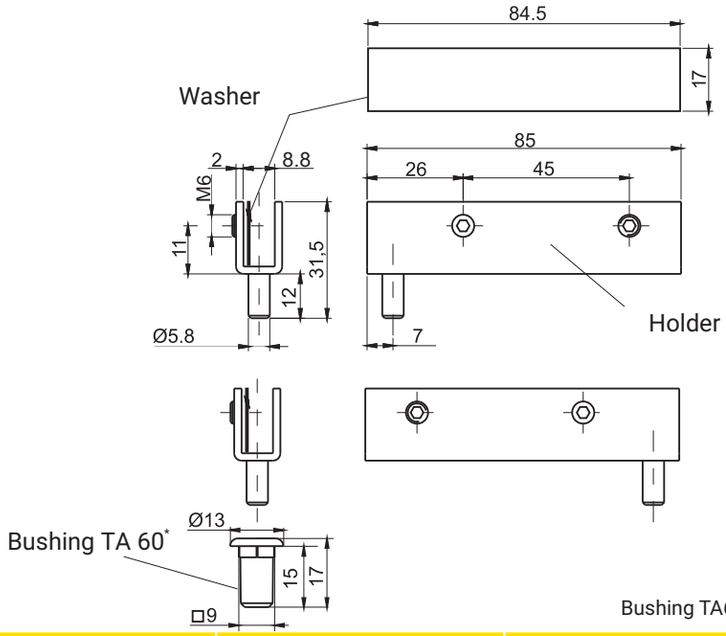

3.ST24.001 - right version
3.ST24.002 - left version

Bushing TA60 (pg. 3B-32) ordered seperately.

CATALOGUE NUMBER	COMPONENTS	MATERIAL	FINISH [C]	
			RAL9005	RAL7035
3.ST24.001	Holder	Steel zinc plated	04	05
	Washer	Brass		
3.ST24.002	Holder	Steel zinc plated		
	Washer	Brass		

* to special order
** possibility to make a different color

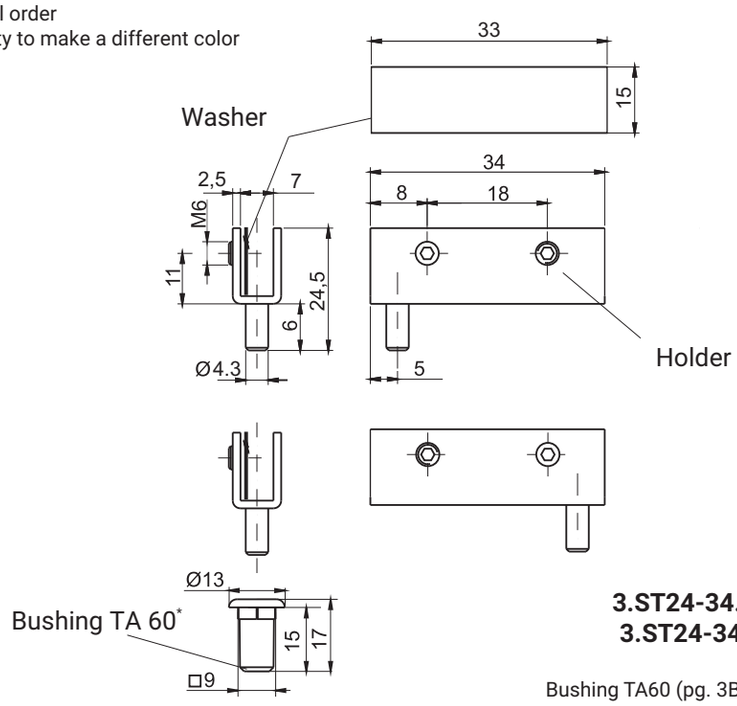

3.ST24-34.001 - right version
3.ST24-34.002 - left version

Bushing TA60 (pg. 3B-323) ordered seperately.

CATALOGUE NUMBER	COMPONENTS	MATERIAL	FINISH [C]	
			RAL9005	RAL7035
3.ST24-34.001	Holder	Steel zinc plated	04	05
	Washer	Brass		
3.ST24-34.002	Holder	Steel zinc plated		
	Washer	Brass		

* to special order, ** possibility to make a diffrent color

How to order: 3.ST24.001 — C
Catalogue number
Finish

Hinge 3.ST20

stainless steel

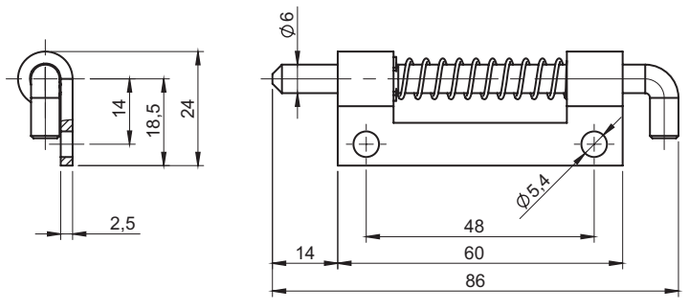

CATALOGUE NUMBER	COMPONENTS	MATERIAL
3.ST20.004	Holder, Pin	Steel zinc plated
3.ST20.004SN	Holder, Pin	Stainless steel

stainless steel

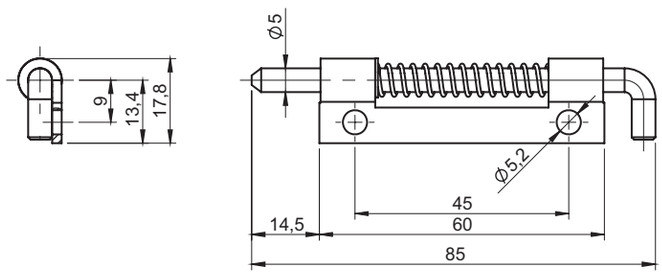

CATALOGUE NUMBER	COMPONENTS	MATERIAL
3.ST20.005	Holder, Pin	Steel zinc plated
3.ST20.005SN	Holder, Pin	Stainless steel

stainless steel

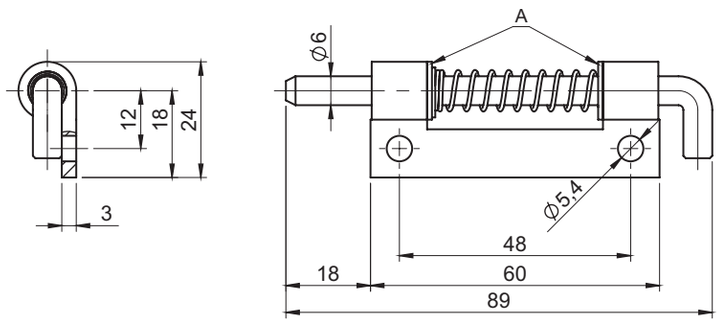

A - slide bushings made of plastics

CATALOGUE NUMBER	COMPONENTS	MATERIAL
3.ST20.010	Holder, Pin	Steel zinc plated
	Plain bearing bush	POM
3.ST20.010SN	Holder, Pin	Stainless steel

Hinge 3.ST60, 3.ST65

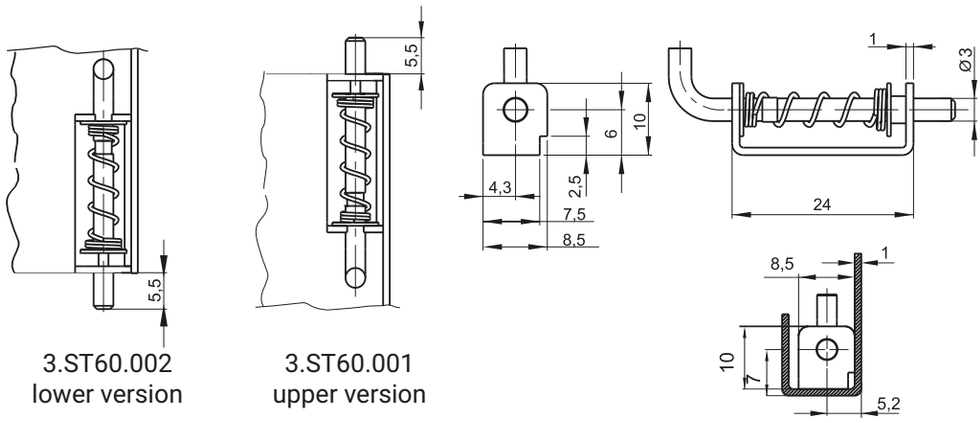

3.ST60.002
lower version

3.ST60.001
upper version

CATALOGUE NUMBER	COMPONENTS	MATERIAL
3.ST60.001	Holder	Steel
3.ST60.002	Pin	Steel zinc plated

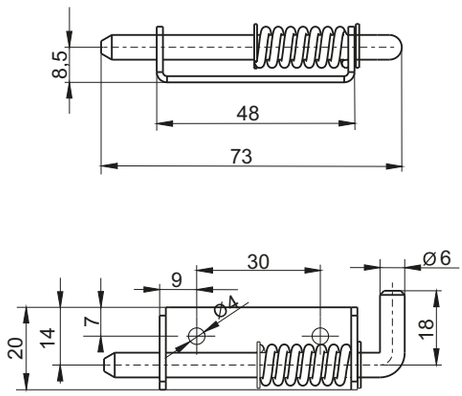

CATALOGUE NUMBER	COMPONENTS	MATERIAL
3.ST60.003	Holder, Pin	Steel zinc plated
3.ST60.004	Holder, Pin	Steel zinc plated

stainless steel

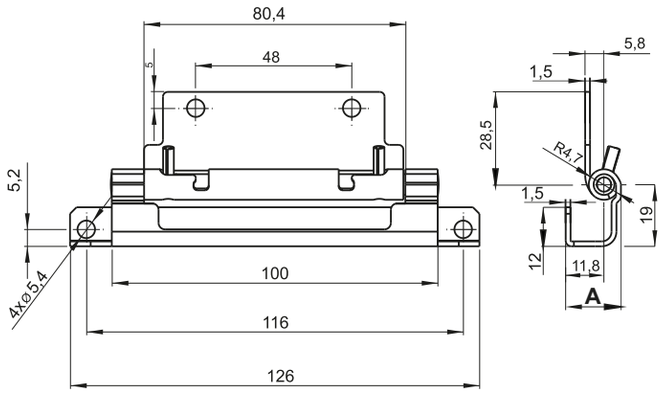

CATALOGUE NUMBER	DIMENSIONS A [mm]	COMPONENTS	MATERIAL
3.ST65.001	17	Holder, Base, Pin	Steel zinc plated
3.ST65.002	20		
3.ST65.003	23,4		
3.ST65.001SN	17	Holder, Base, Pin	Stainless steel
3.ST65.002SN	20		
3.ST65.003SN	23,4		

Hinge 3.ST94, 3.ST81, TA60

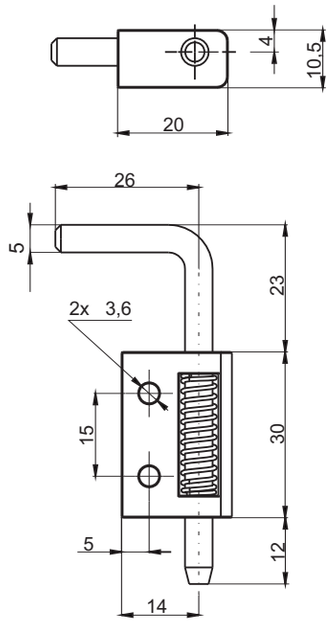

3.ST94.001

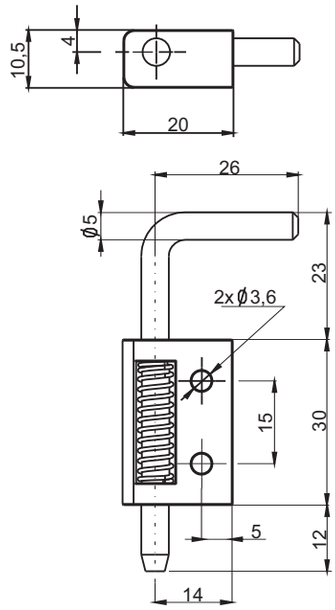

3.ST94.002

CATALOGUE NUMBER	COMPONENTS	MATERIAL	FNISH [C]
			RAL9005
3.ST94.001 3.ST94.002	Holder	Polyamide	07
	Pin	Steel zinc plated	

TA60

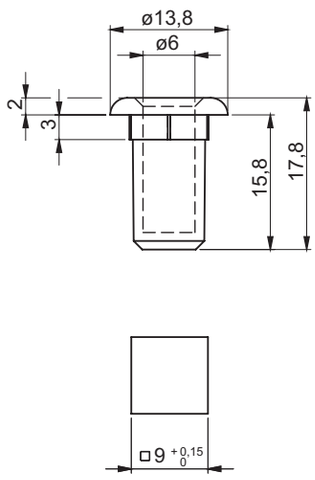

Mounting hole

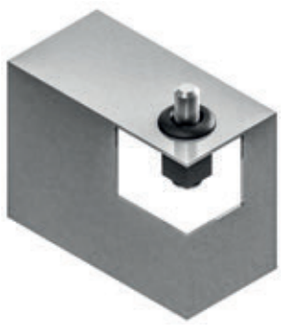

3.ST81.100
3.ST81.101

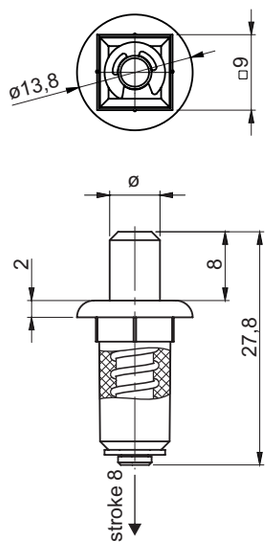

CATALOGUE NUMBER	ø [mm]	COMPONENTS	MATERIAL	FINISH [C]
				RAL9005
3.ST81.100	6	Housing	Polyamide PA6	07
		Pin	Steel zinc plated	
3.ST81.101	5	Spring	Spring steel zinc plated	
TA60	6	Bushing	Polyamide PA6	

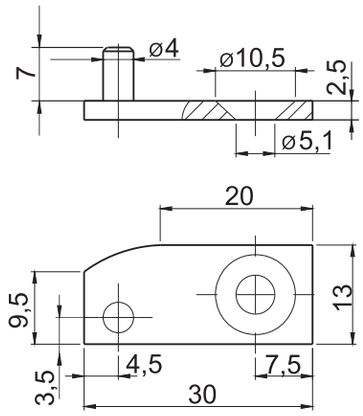

CATALOGUE NUMBER	COMPONENTS	MATERIAL
3.ST67.001	Holder	Steel zinc plated

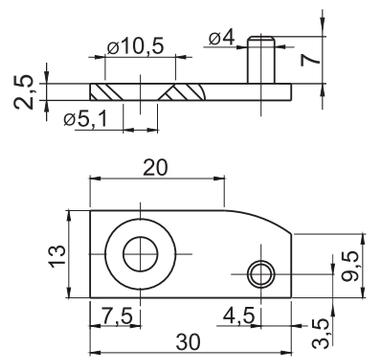

CATALOGUE NUMBER	COMPONENTS	MATERIAL
3.ST67.002	Holder	Steel zinc plated

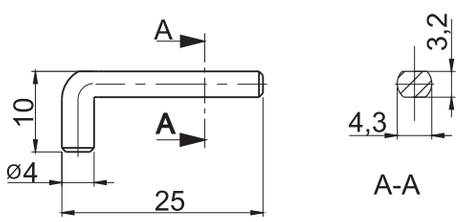

CATALOGUE NUMBER	COMPONENTS	MATERIAL
3.ST67.001.03	Pin	Steel

Hinge 3.ST81, 3.ST84

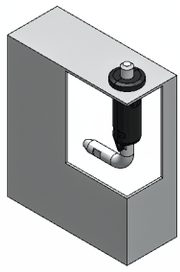

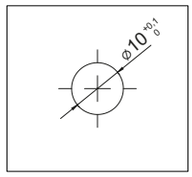

Mounting hole

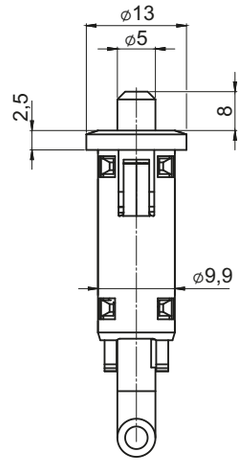

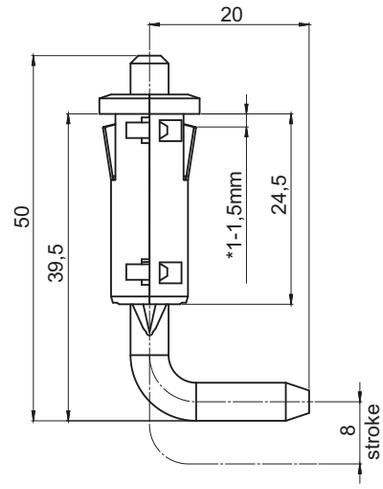

CATALOGUE NO.	COMPONENTS	MATERIAL	FINISH [C]	
			RAL 9005	RAL 9010
3.ST81.001	Housing	Polyamide	07	11
	Pin	ZAMAK 5		
	Spring	Steel		

How to order:

3.ST81.001 — C

Catalogue number

Finish

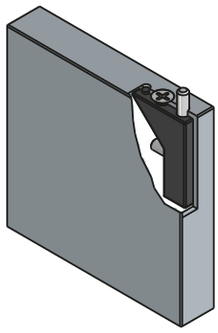

Screw acc. to
DIN 7982 (Ø2,9x10)

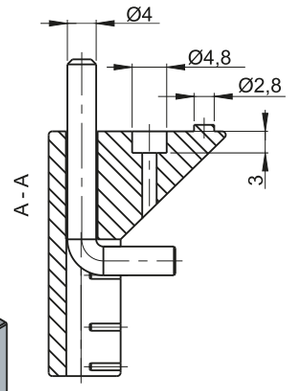

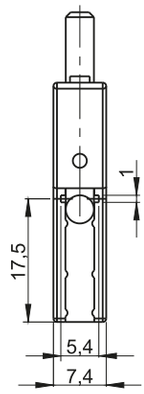

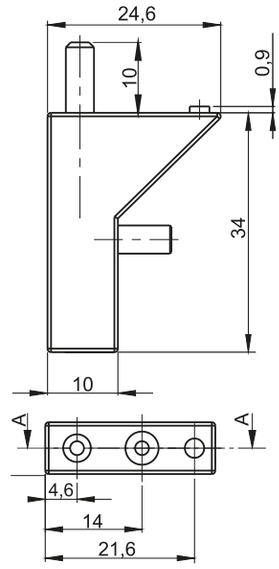

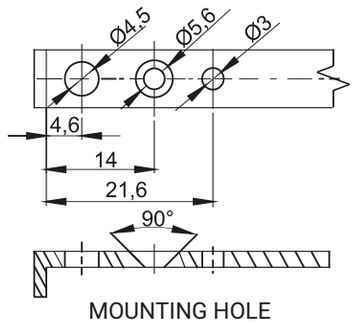

MOUNTING HOLE

CATALOGUE NUMBER	COMPONENTS	MATERIAL	FINISH [C]
			RAL 9005
3.ST84.001	Holder	Polyamide	07
	Pin	Steel zinc plated	

3.ST96.001

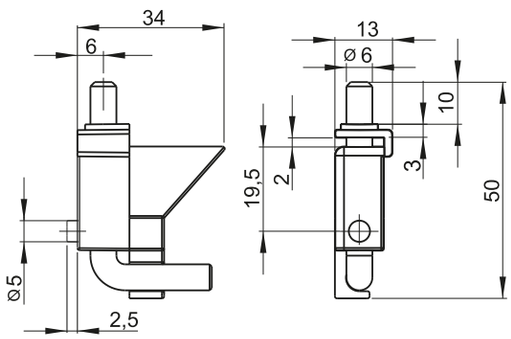

3.ST96.002

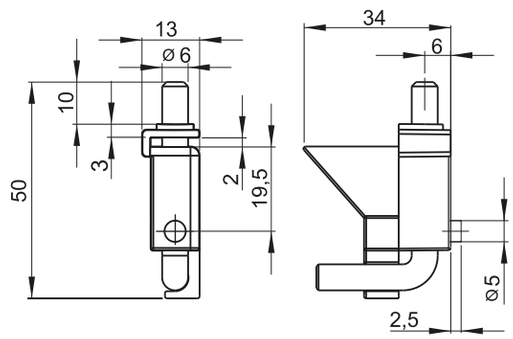

3.ST96.003

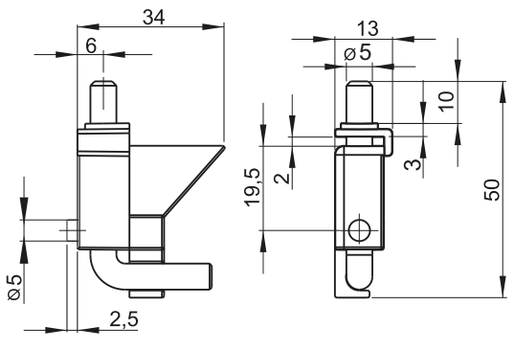

3.ST96.004

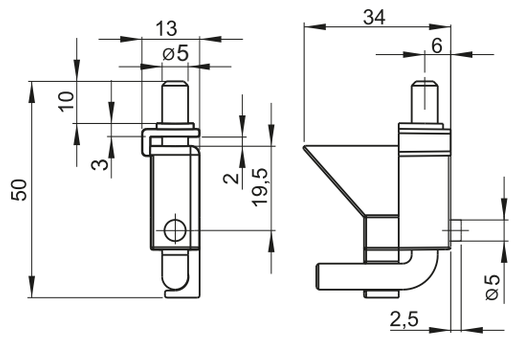

Mounting holes

3.ST96.001
3.ST96.002

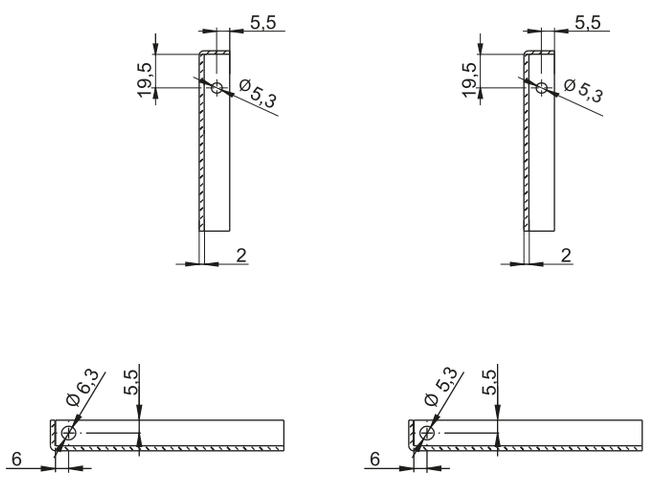

3.ST96.003
3.ST96.004

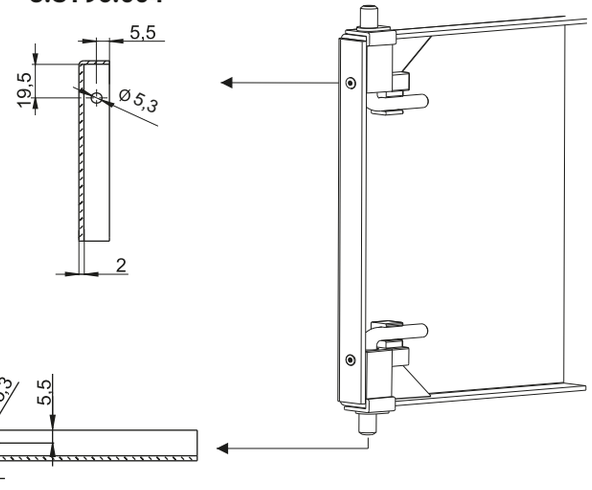

CATALOGUE NUMBER	COMPONENTS	MATERIAL	FNISH [C]	
			RAL9005	RAL7035
3.ST96.001 **3.ST96.002**	Holder	PP	07	08
	Pin	Steel zinc plated		
3.ST96.003 **3.ST96.004**	Holder	PP	07	08
	Pin	Steel zinc plated		

How to order:

3.ST96.001 — C

Catalogue number

Finish

Hinge 3.ST26

ROZTOCZE

stainless steel

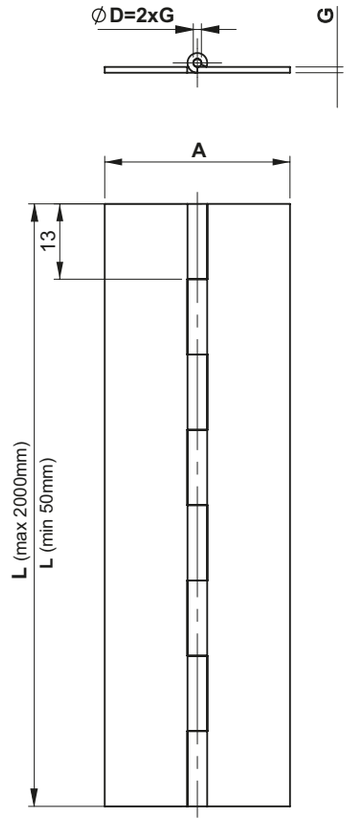

Standard insert diameter D for chosen thickness	
Sheet metal thickness **G**	Insert diameter **D**
0,8	Ø2
1	Ø1,5 or Ø2
1,5	Ø3, Ø4
2	Ø4, Ø6
3	Ø6

CATALOGUE NUMBER	COMPONENTS	MATERIAL
3.ST26.001	Holder, Pin	Steel zinc plated
3.ST26.001SN		Stainless steel

How to order: **3.ST26.001 – L – A – G – D**

- Catalogue number
- Total length of the hinge
- Total width of the hinge
- Thickness of the hinge
- Insert diameter

Hinge 3.ST26

stainless steel

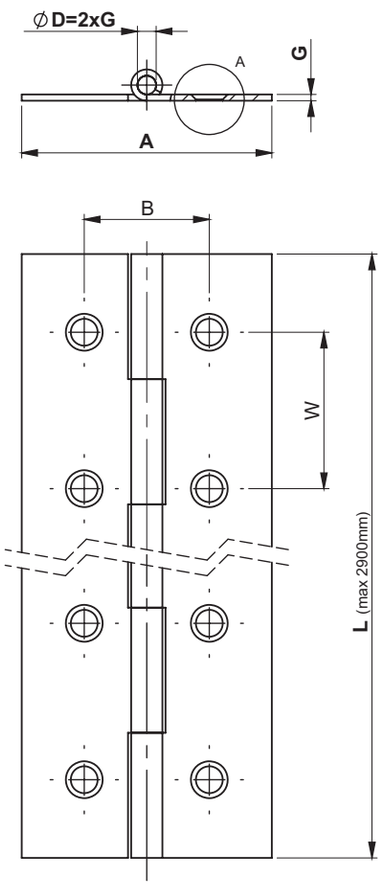

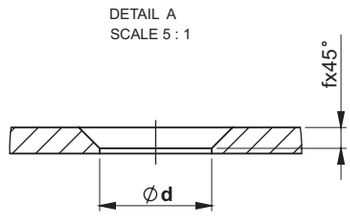

Standard insert diameter D for chosen thickness	
Sheet metal thickness **G**	Insert diameter **D**
0,8	Ø2
1	Ø2
1,5	Ø3, Ø4
2	Ø4, Ø6
3	Ø6

CATALOGUE NUMBER	COMPONENTS	MATERIAL
3.ST26.003	Holder, Pin	Steel zinc plated
3.ST26.003SN		Stainless steel

How to order:

3.ST26.003 – L – A – G – D – d – B – W – F

Catalogue number
Total length of the hinge
Total width of the hinge
Thickness of the hinge
Insert diameter (Dmin=2xG)

If mounting holes are reqiured to make it should be stated:
Dimension
Spacing
Leap of holes
Phase dimension of a hole (if needed)
Other dimensions stated before production.

Hinge 3.ST50

3.ST50.001

3.ST50.002

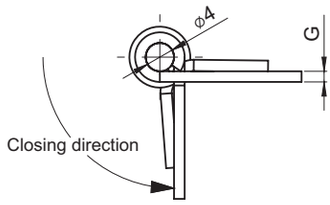

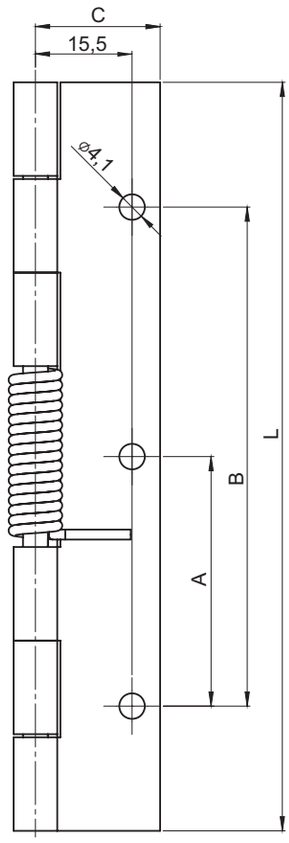

3.ST50.003

3.ST50.004

*closing from axis

CATALOGUE NUMBER	DIMENSION					MATERIAL
	A	B	C	G	L	
3.ST50.001	30	-	25	2	50	Steel zinc plated
3.ST50.002	40	80	20	1,5	120	
3.ST50.003	60	120	20	1,5	180	
3.ST50.004	-	-	20	1,5	120	
3.ST50.001SN	30	-	25	2	50	Stainless steel
3.ST50.002SN	40	80	20	1,5	120	
3.ST50.003SN	60	120	20	1,5	180	
3.ST50.004SN	-	-	20	1,5	120	

Left hinge
3.ST79.002

Right hinge
3.ST79.001

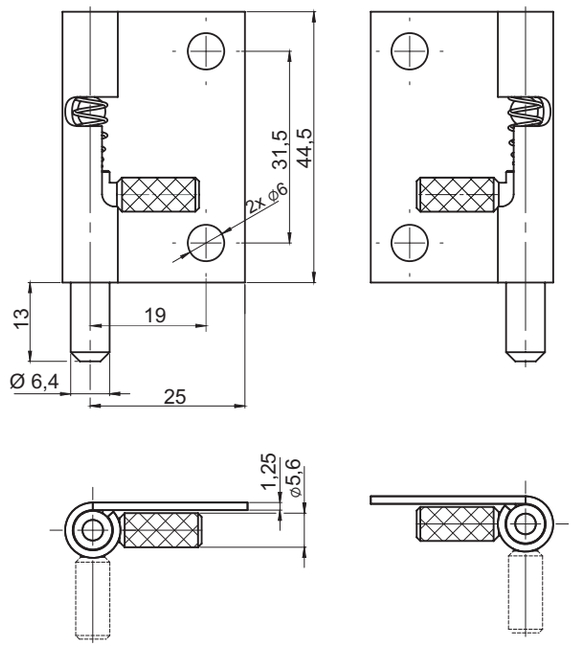

CATALOGUE NO.	VERSION	COMPONENTS	MATERIAL
3.ST79.001SN	Right	Holder, Pin	Stainless steel
3.ST79.002SN	Left	Holder, Pin	

Left hinge
3.ST104.006.002

Right hinge
3.ST104.006.001

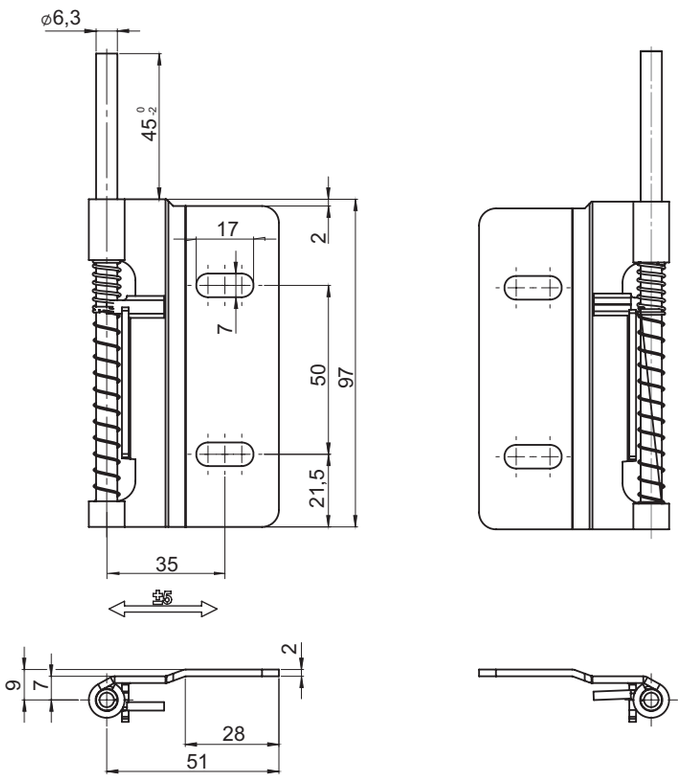

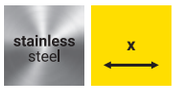

CATALOGUE NO.	VERSION	COMPONENTS	MATERIAL
3.ST104.006.001SN	Right	Holder, Pin	Stainless steel
3.ST104.006.002SN	Left		

Hinge 3.ST89

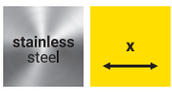

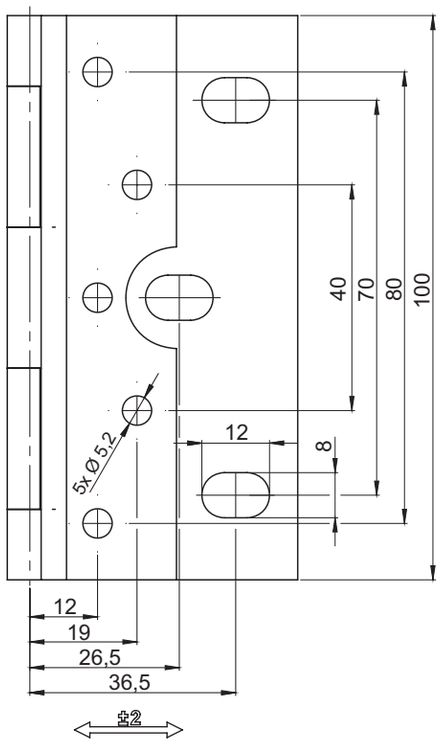

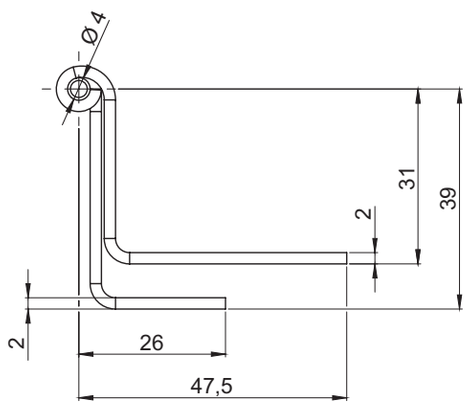

CATALOGUE NO.	COMPONENTS	MATERIAL
3.ST89.001SN	Holder, Base, Pin	Stainless steel

stainless steel

3.ST25.001

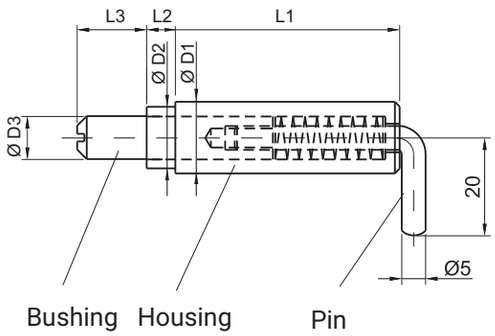

3.ST25.002

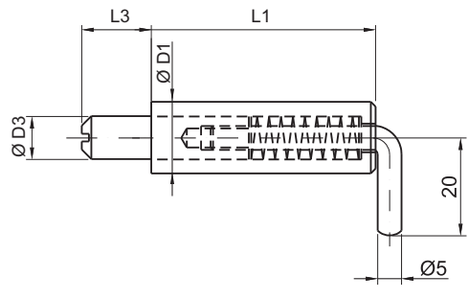

3.ST25.002.01

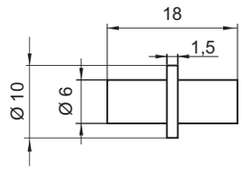

CATALOGUE NUMBER	Ø D1	Ø D2	Ø D3	L1 mm	L2 mm	L3 mm	COMPONENTS	MATERIAL
3.ST25.001	15	13	9	47	6	15	Housing, Bushing	Steel zinc plated
							Pin	
3.ST25.001SN							Housing, Bushing	Stainless steel
							Pin	
3.ST25.002	10	-	6	41,5	-	13	Housing, Bushing	Steel zinc plated
							Pin	
3.ST25.002.01	-						Limiter	Steel without finish
3.ST25.005	12	9	6	38	3,5	10	Housing	Steel copper plated
							Bushing	Steel zinc plated

stainless steel **LH/RH**

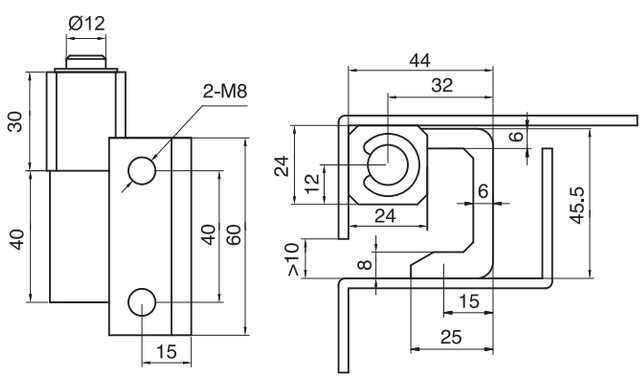

CATALOGUE NUMBER	COMPONENTS	MATERIAL
3.550.001	Holder, Pin	Stainless steel

Hinge 3.ST7, 3.ST7-1, 3.ST7-2

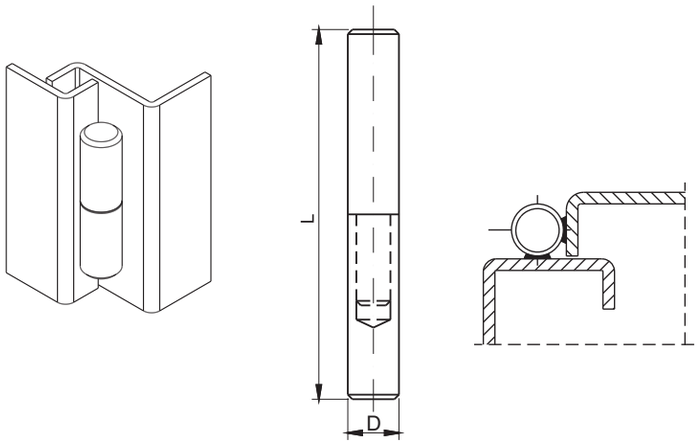

CATALOGUE NUMBER	Dimension		X
	L [mm]	D [mm]	
3.ST7.X 3.ST7.XSN	40	10	001
	50	10	002
	65	10	003
	40	14	005
	100	13	006
	100	16	007

CATALOGUE NUMBER	COMPONENTS	MATERIAL
3.ST7.X	Holder, Pin	Steel
3.ST7.XSN	Holder, Pin	Stainless steel

ST 7-1

ST 7-2

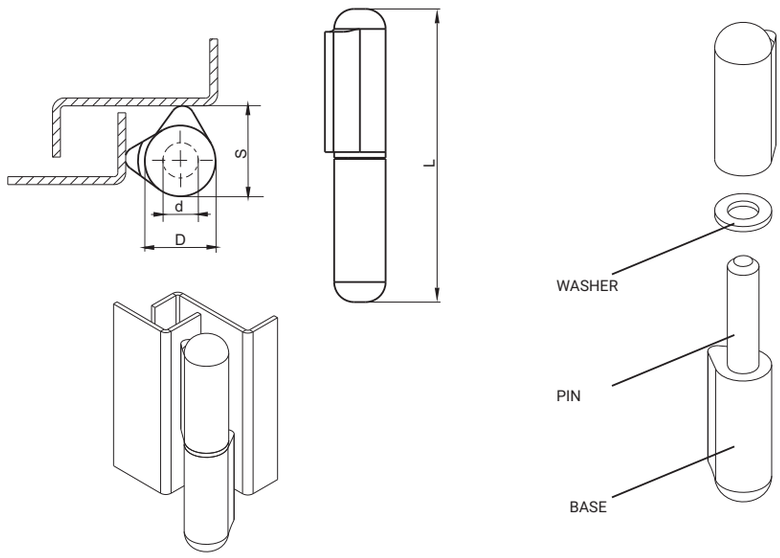

CATALOGUE NUMBER	COMPONENTS	MATERIAL
3.ST7-1 3.ST7-2	Base, Pin	Steel
	Washer	Brass

Cat. No. ST7-1	Cat. No. ST7-2	Dimensions	D	S	d	L
ST7-1.001A	ST7-2.001A	8x9,5	8	9,5	5	40
ST7-1.001B	ST7-2.001B	8x9,5	8	9,5	5	50
ST7-1.002A	ST7-2.002A	10x12	10	12	6	60
ST7-1.002B	ST7-2.002B	10x12	10	12	6	70
ST7-1.003	ST7-2.003	13x16	13	16	8	80
ST7-1.004	ST7-2.004	16x20	16	20	10	100
ST7-1.005	ST7-2.005	18x22	18	22	12	135
ST7-1.006	ST7-2.006	20x25	20	25	14	150
ST7-1.007	ST7-2.007	23x28	23	28,5	16	200

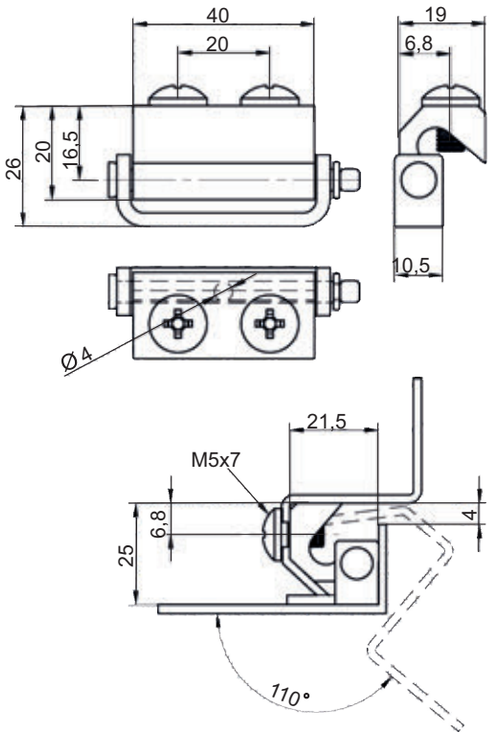

CATALOGUE NUMBER	COMPONENTS	MATERIAL
3.538.001	Holder	Steel copper plated
	Base	Aluminum zinc plated

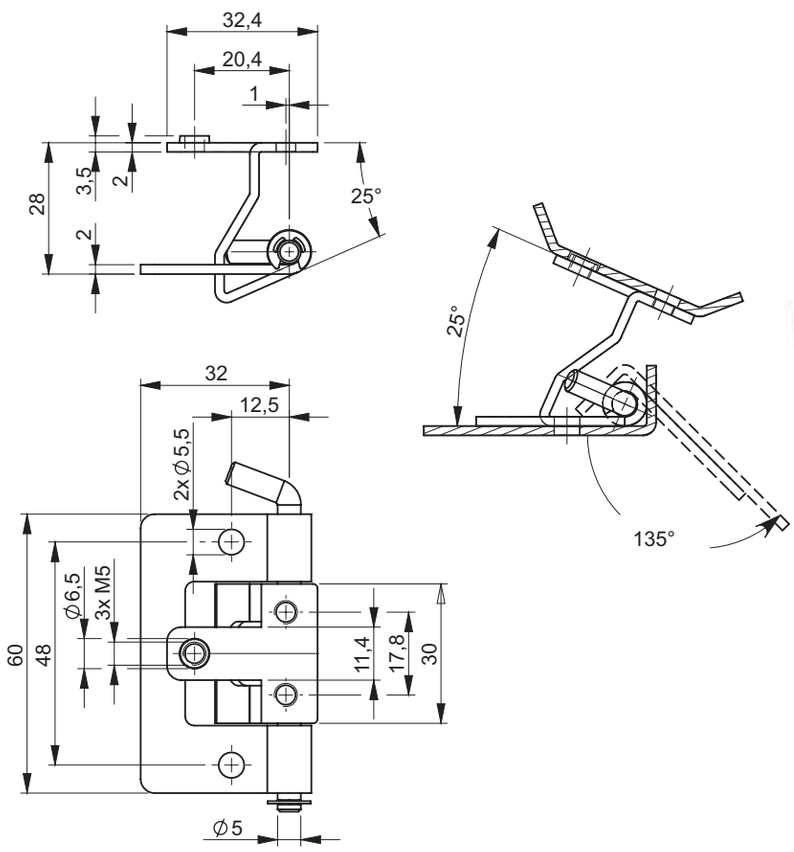

CATALOGUE NUMBER	COMPONENTS	MATERIAL
3.539.001	Holder, Base	Steel zinc plated

Hinge 3.ST551, 3.ST552, 3.ST553

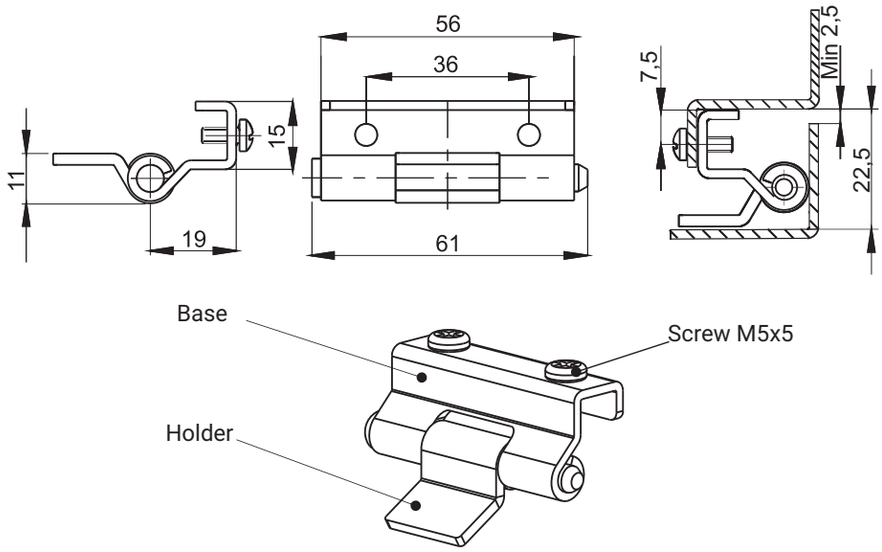

CATALOGUE NUMBER	COMPONENTS	MATERIAL
3.ST551.001	Base	Steel zinc plated
	Holder	Steel copper plated

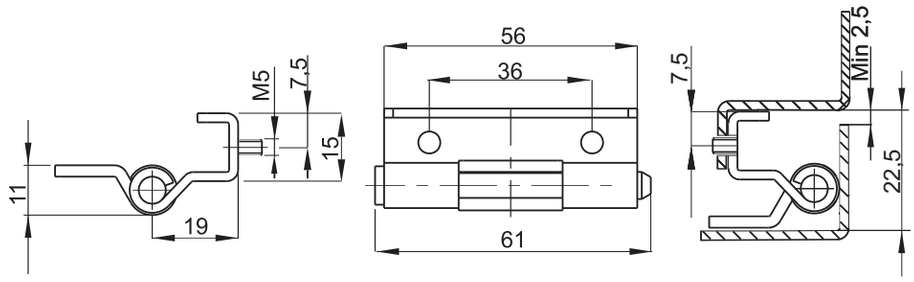

CATALOGUE NUMBER	COMPONENTS	MATERIAL
3.ST552.001	Base	Steel zinc plated
	Holder	Steel copper plated

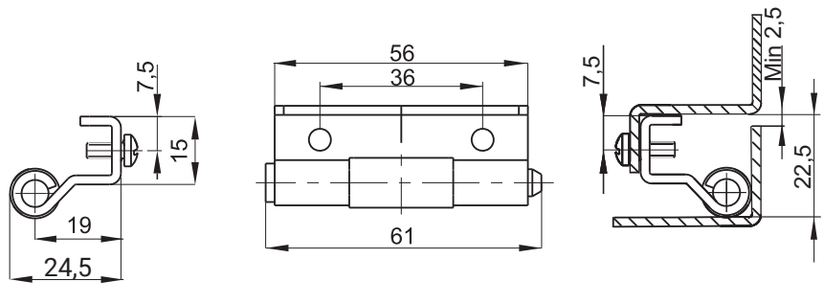

CATALOGUE NUMBER	COMPONENTS	MATERIAL
3.ST553.001	Base	Steel zinc plated
	Holder	Steel copper plated

3.ST558 ver. 001

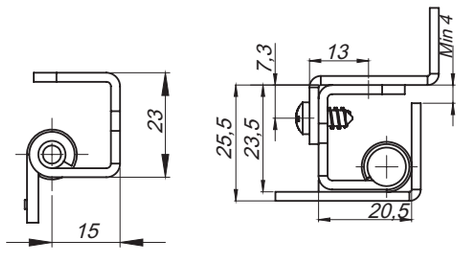

3.ST558 ver. 002

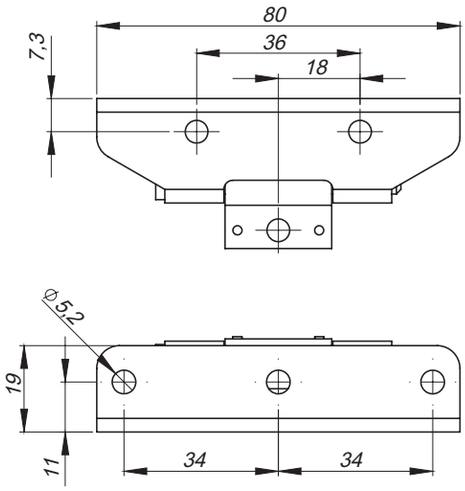

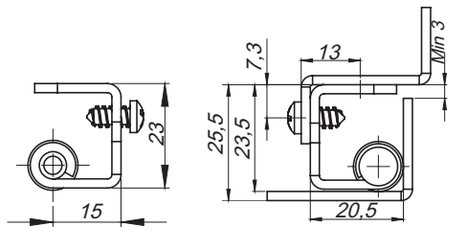

3.ST558 ver. 003

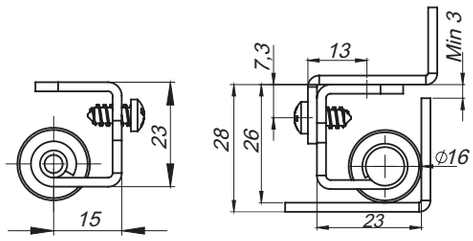

CATALOGUE NUMBER	COMPONENTS	MATERIAL
3.ST558.001	Base, pin	Steel zinc plated
	Holder	Steel copper plated
3.ST558.002	Base, pin	Steel zinc plated
	Collet	Steel copper plated
3.ST558.003	Base, pin	Steel zinc plated
	Collet	Steel copper plated

Hinge 3.501, 3.502, 3.503

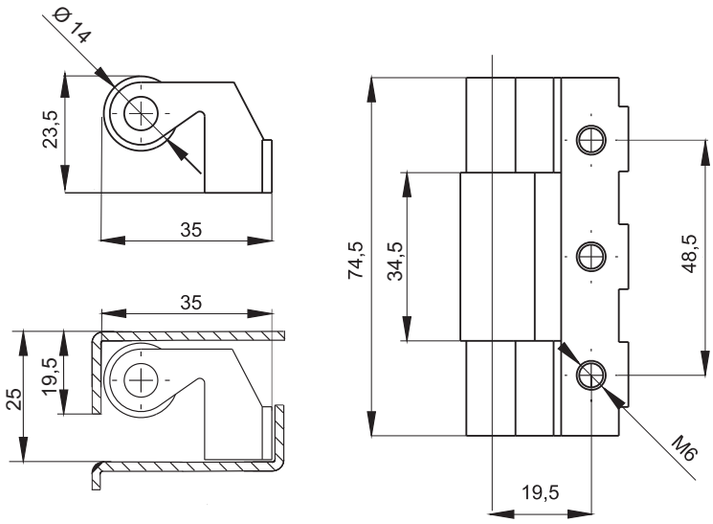

CATALOGUE NUMBER	COMPONENTS	MATERIAL
3.501.001	Base	ZAMAK 5 zinc plated
	Holder	Steel copper plated
	Pin	Steel zinc plated

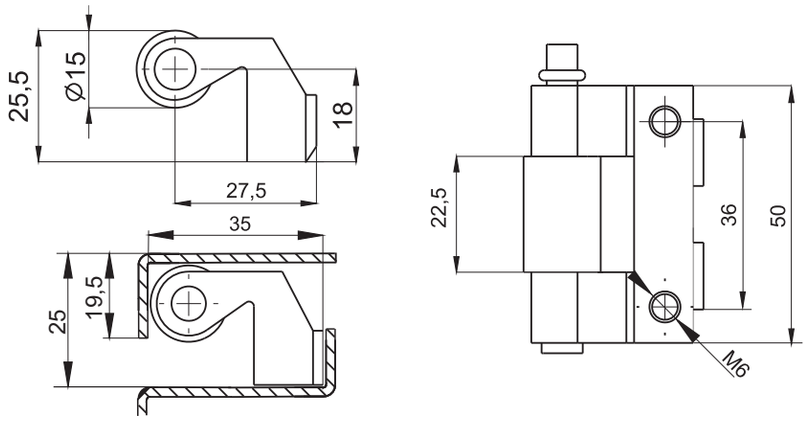

CATALOGUE NUMBER	COMPONENTS	MATERIAL
3.502.001	Base	ZAMAK 5 zinc plated
	Holder	Steel copper plated
	Pin	Steel zinc plated

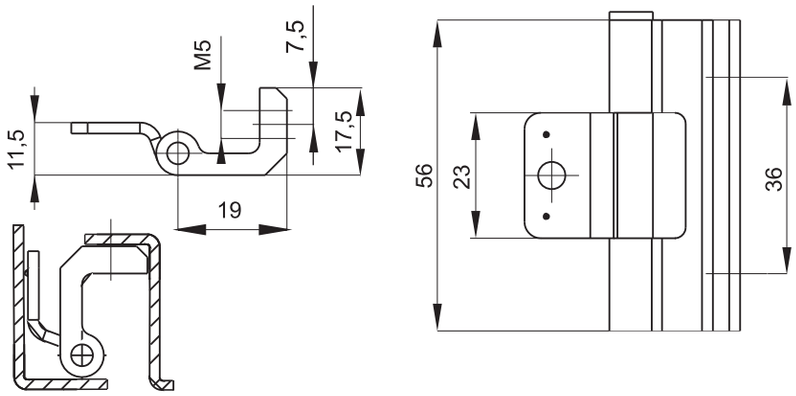

CATALOGUE NUMBER	COMPONENTS	MATERIAL
3.503.001	Base	ZAMAK 5 zinc plated
	Holder	Steel copper plated
	Pin	Steel zinc plated

Left hinge
3.ST300.002SN

Right hinge
3.ST300.001SN

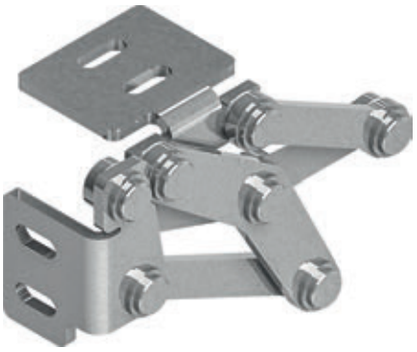

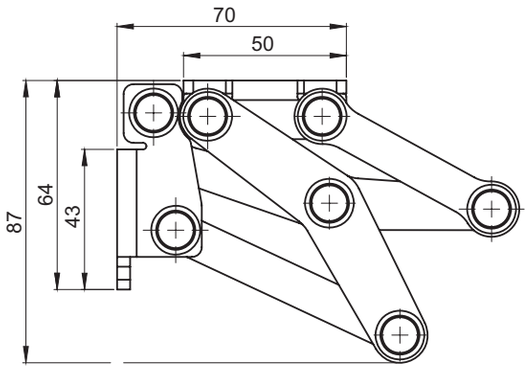

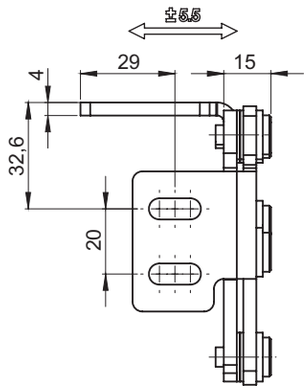

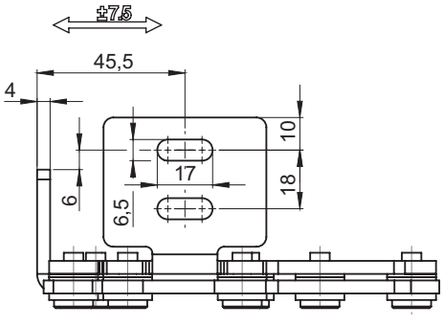

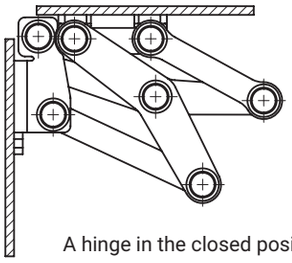

A hinge in the closed position

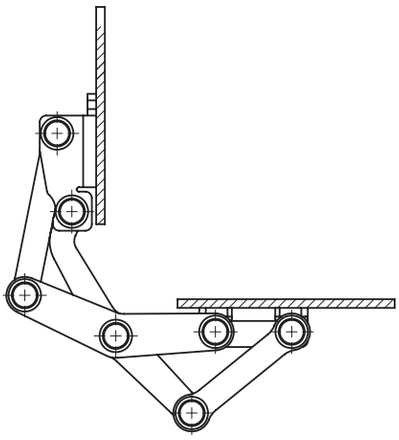

A hinge in the open position

CATALOGUE NO.	VERSION	MATERIAL
3.ST300.001SN	Right	Stainless steel
3.ST300.002SN	Left	

Hinge 3.ST301

3.ST301.001SN
Right hinge

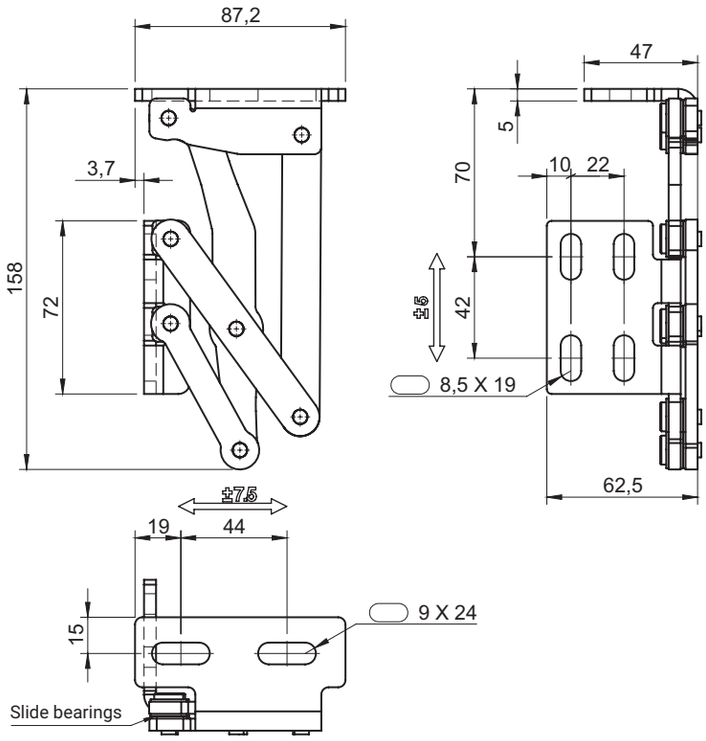

3.ST301.002SN
Left hinge

Closed position

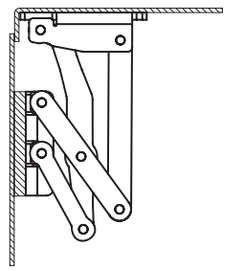

Open position

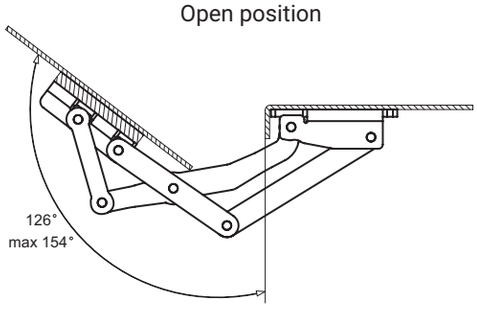

All hinge pivot axes are supported by slide bearings

CATALOGUE NUMBER	VERSION	MATERIAL
3.ST301.001SN	Right	Stainless steel
3.ST301.002SN	Left	

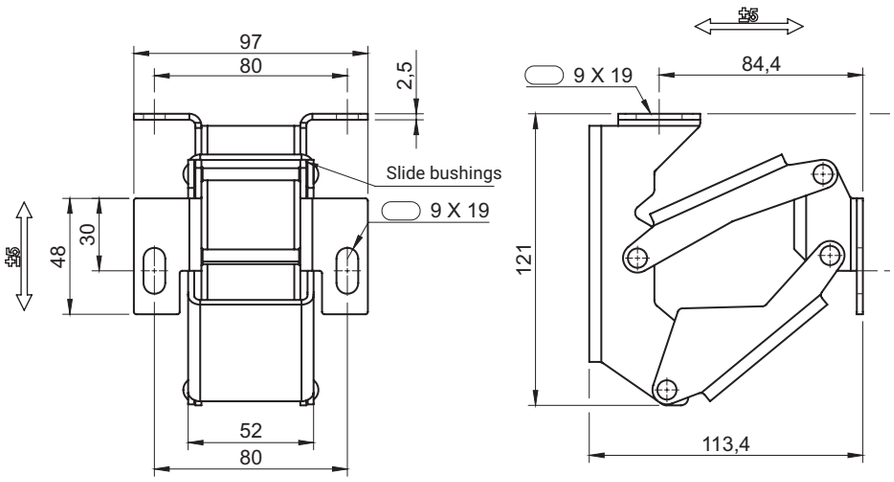

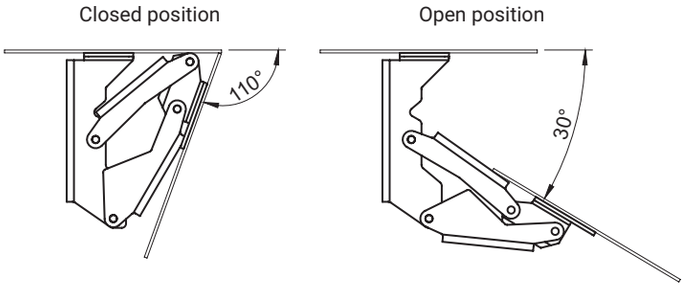

All hinge pivot axes are supported by slide bearings

CATALOGUE NUMBER	MATERIAL
3.ST302.001SN	Stainless steel

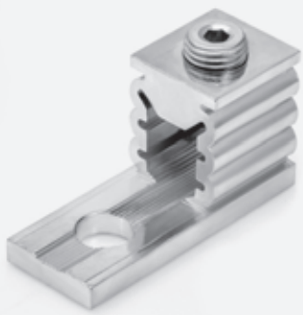

Screw clamps v-klema type
Single aluminium

25-120SW

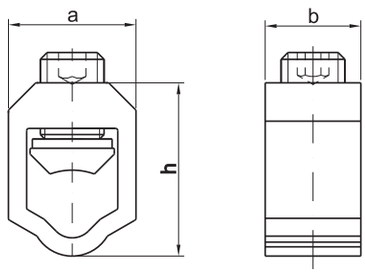

35-240SW
50-240SW

35-240SW-C
50-240SW-C

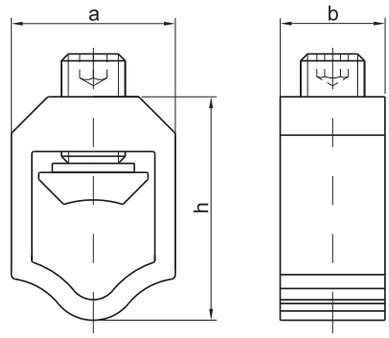

70-300SW
95-300SW

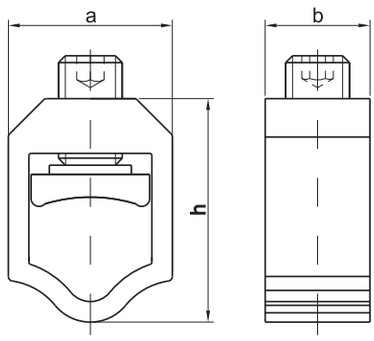

25-120SW-B
50-300SW-B
95-300SW-B

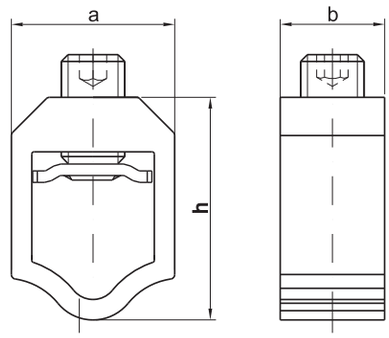

sm - multiwire sector shaped conductor (flexible)
rm - round multiwire conductor (flexible)
se - sector shaped conductor (rigid)
re - round conductor (rigid)

DETAIL	CROSS-SECTION [mm²]				NOMINAL CROSS-SECTION [mm²]	MAX TIGHTENING TORGUE [Nm]	DIMENSIONS		
	sm	se	rm	re			a	b	h
25-120SW	25-120	25-120	16-95	16-95	95	20	28	18,5	38
35-240SW	35-185	35-240	25-150	25-95	120	30	35	23	49
50-240SW	50-185	50-240	35-95	35-120	120	30	35	23	49
70-300SW	70-240	95-300	50-120	70-150	150	30	35	23	49
95-300SW	70-240	95-300	50-185	70-240	150	30	37,5	23	54
25-120SW-B	25-120	25-120	16-95	16-120	95	20	28	18,5	38
50-300SW-B*	50-240	50-300	35-240	35-240	150	35	35	23	49
95-300SW-B	50-300	50-300	50-300	50-150	150	30	37,5	23	54
35-240SW-C	35-240	35-240	35-95	35-120	150	30	35	23,2	49
50-240SW-C	50-240	50-240	35-95	35-120	150	30	35	23,2	49

	25-120SW	35-240SW	50-240SW	70-240SW	95-300SW	25-120SW-B	50-300SW-B	95-300SW-B	35-240SW-C	50-240SW-C
clamp	brass- zinc plated					spring steel zinc-plated			nickel-plated zinc-alloy	
housing	aluminium (AlMgSi)									
screw	steel zinc-plated									

SW - hexagon head socked
Screw clamps have safety sign 'B' Wg PN-EN 60947-7-1, (IEC 60947-7-1), EN 61238, EN 60999
* EN 60947-7-1, EN 60947-7-2

Screw clamps v-klema type
Double aluminium

2/25-120SW
2/50-240SW
2/25-120SW-D
2/50-240SW-D

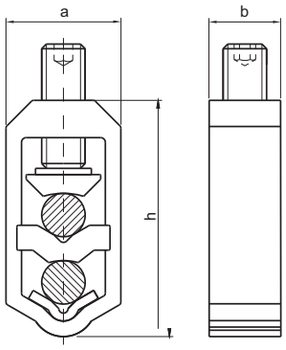

2/70-300SW
2/70-300SW-E

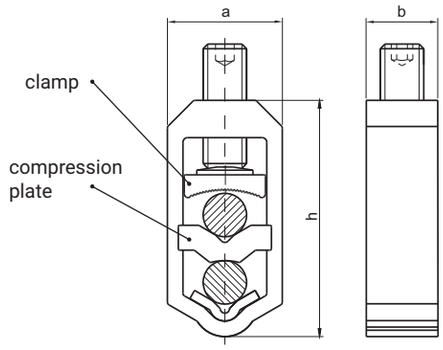

2/25-120SW-B
2/35-300SW-B

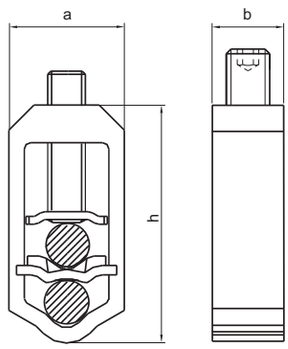

2/25-120SW-E

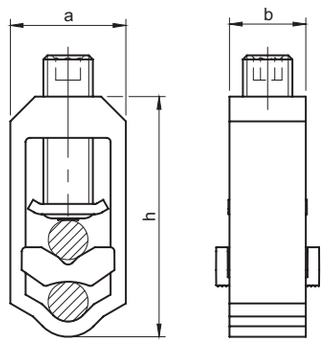

sm - multiwire sector shaped conductor (flexible)
rm - round multiwire conductor (flexible)
se - sector shaped conductor (rigid)
re - round conductor (rigid)

DETAIL	CROSS-SECTION [mm²]				NOMINAL CROSS-SECTION [mm²]	MAX TIGHTENING TORGUE[Nm]	DIMENSIONS		
	sm	se	rm	re			a	b	h
2/25-120SW	25-120	25-120	16-95	16-95	95	20	28	18	58
2/50-240SW	35-185	35-240	35-120	35-150	150	30	37	23	76
2/70-300SW	70-240	95-300	50-120	70-150	150	30	37	23	76
2/25-120SW-B	25-120	25-120	16-120	16-120	95	20	28	18	58
2/35-300SW-B	50-240	50-240	35-300	50-150	150	30	37	23	76
2/25-120SW-D	25-120	25-120	16-95	16-95	95	20	28	18	58
2/50-240SW-D	35-185	35-240	35-120	35-150	150	30	37	23	76
2/70-300SW-E	70-240	95-300	50-120	70-150	150	30	37	23	76
2/25-120SW-E	25-120	25-120	16-95	16-95	95	20	28	18	58

	2/25-120SW	2/50-240SW	2/70-300SW	2/25-120SW-B	2/35-300SW-B
clamp	brass- zinc plated			spring steel zinc-plated	
compression plate	brass- zinc plated			spring steel zinc-plated	
housing	aluminium (AlMgSi)				
screw	steel zinc-plated				

	2/25-120SW-D	2/50-240SW-D	2/70-300SW-E	2/25-120SW-E
clamp	brass- zinc plated	ZAMAK tin-plated	brass- zinc plated	spring steel zinc-plated
compression plate	ZAMAK tin-plated			
housing	aluminium (AlMgSi)			
screw	steel zinc-plated			

inc plated

* SW - hexagon head socked
* Screw clamps have safety sign 'B' Wg PN-EN 60947-7-1, (IEC 60947-7-1), EN 61238, EN 60999

Screw clamps v-klema type Aluminium

ROZTOCZE

16-120 SW

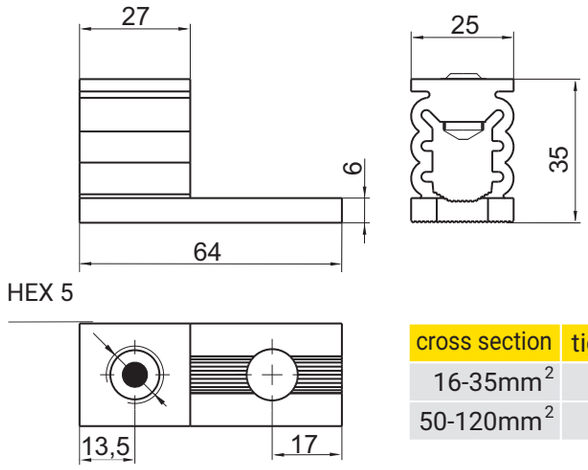

cross section	tightening torgue
16-35mm^2	12 Nm
50-120mm^2	25 Nm

For the multiwire sector shaped conductor **rm** the need to use the tip of the sleeveDIN 46228/4

10-150.SW.A **10-150.SW.B** **10-150.SW.C1** **10-150.SW.C2**

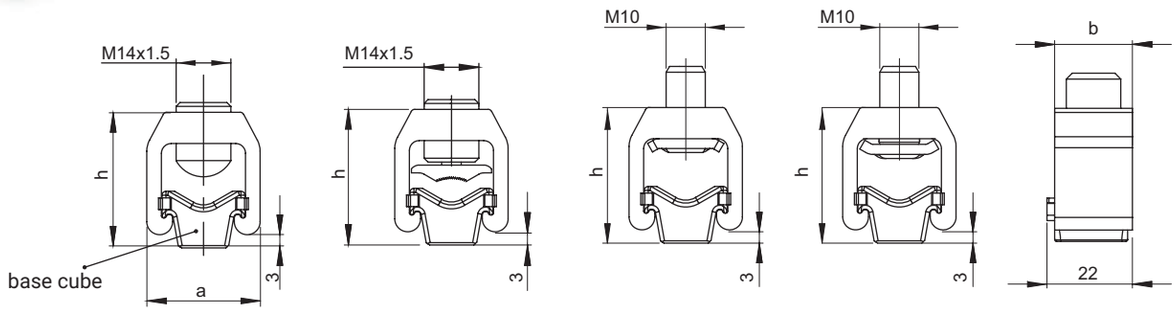

sm - multiwire sector shaped conductor (flexible)
rm - round multiwire conductor (flexible)
se - sector shaped conductor (rigid)
re - round conductor (rigid)

DETAIL	CROSS-SECTION [mm^2]				NOMINAL CROSS-SECTION [mm^2]	MAX TIGHTENING TORGUE [Nm]	DIMENSIONS		
	sm	se	rm	re			a	b	h
16-120SW	-	-	16-120	16-120	120	12-25	25	27	35
10-150.SW.A	35-120	35-150	10-95	10-120	120	15	29	20	34
10-150.SW.B	35-70	35-95	10-50	10-70	95	15	29	20	34
10-150.SW.C	35-70	35-95	10-50	10-70	95	15	29	20	34

	16-120SW	10-150.SW.A	10-150.SW.B	10-150.SW.C1/C2
clamp	-	-	brass tin-plated	spring steel zinc-plated
base cube	-	Brass tin-plated		
housing	aluminium (AlMgSi)			
screw	brass tin-plated			steel zinc-plated

* SW - hexagon head socked.
* Screw clamps have safety sign 'B' WG PN-EN 60947-7-1, (IEC 60947-7-1)

HM 6-50

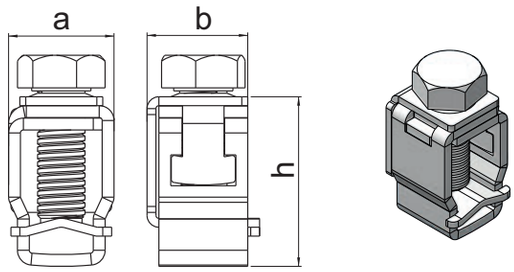

HS 10-95

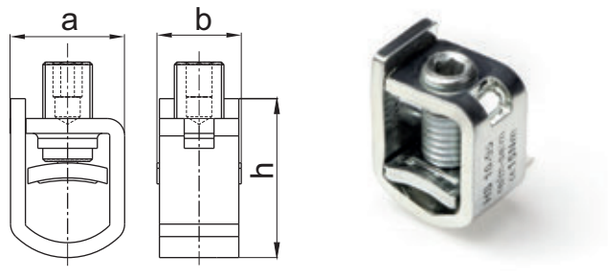

HS 6-50

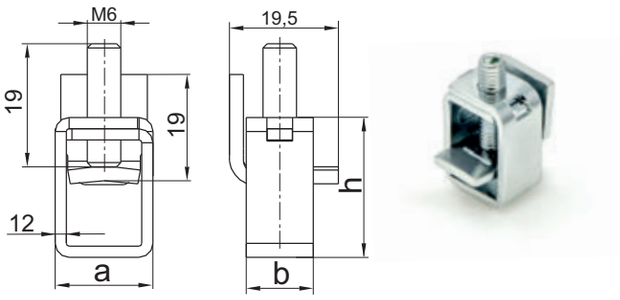

HM 10-95/A
HM 10-95/C
HM 25-150/A
HM 25-150/B

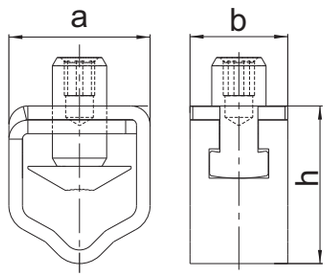

HM 10-95/B

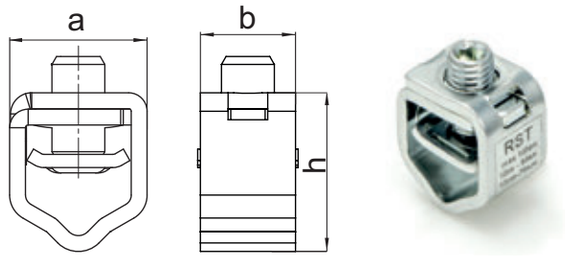

sm - multiwire sector shaped conductor (flexible)
rm - round multiwire conductor (flexible)
se - sector shaped conductor (rigid)
re - round conductor (rigid)

DETAIL	CROSS-SECTION [mm²]				NOMINAL CROSS-SECTION [mm²]	MAX TIGHTENING TORGUE [Nm]	DIMENSIONS		
	sm	se	rm	re			a	b	h
HM 6-50	25-50	25-50	6-50	6-50	50	8	18	16	30
HM 10-95/A	25-95	20-120	10-70	10-70	95	15	26	18	30
HM 10-95/B	25-95	20-120	10-70	10-70	95	15	26	18	30
HM 10-95/C	25-95	20-120	10-70	10-70	95	15	26	18	30
HM 25-150/A	25-120	35-150	25-120	35-120	95	25	26	18	31,5
HM 25-150/B	25-120	35-150	25-120	35-120	95	25	26	18	31,5
HS 6-50	-	-	6-50	6-50	50	6	17,5	12	25
HS 10-95	25-95	25-95	10-95	10-70	95	15	23	16	32

	HM 6-50	HS 6-50	HS 10-95	HM 10-95/A	HM 10-95/B	HM 10-95/C	HM 25-150/A	HM 25-150/B
housing	spring steel zinc-plated			stainless steel	spring steel zinc-plated	spring steel zinc-plated	stainless steel	steel zinc-plated
clamp	spring steel zinc-plated			Brass tin-plated	spring steel zinc-plated	Brass tin-plated	Brass tin-plated	Brass tin-plated
screw	steel zinc-plated			stainless steel	steel zinc-plated	steel zinc-plated	stainless steel	steel zinc-plated

* Screw clamps have safety sign 'B' WG PN-EN 60947-7-1, (IEC 60947-7-1)

Screw clamps v-klema type HS steel single

ROZTOCZE

HS25-240

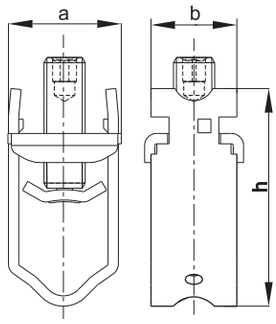

HS 35-300-B
HS 50-300-B

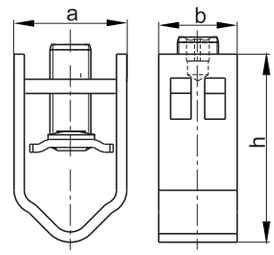

HS 70-300

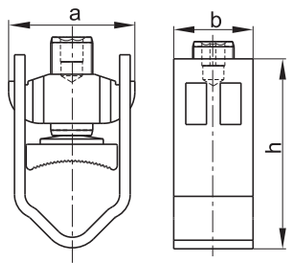

HS 50-240

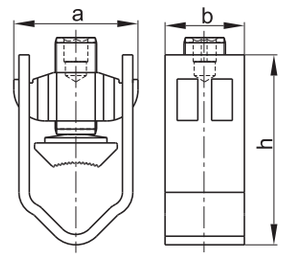

HS 120-300

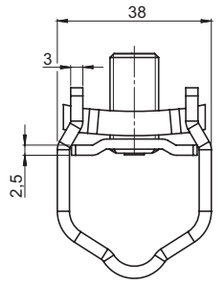

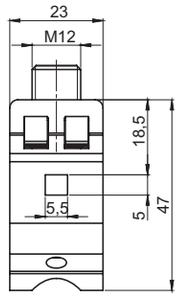

sm - multiwire sector shaped conductor (flexible)
rm - round multiwire conductor (flexible)
se - sector shaped conductor (rigid)
re - round conductor (rigid)

DETAIL	CROSS-SECTION [mm²]				NOMINAL CROSS-SECTION [mm²]	MAX TIGHTENING TORGUE [Nm]	DIMENSIONS		
	sm	se	rm	re			a	b	h
HS 25-240	50-240	50-240	25-185	25-95	240	30	33	25	63
HS 50-240	50-185	50-240	35-120	35-150	150	40	35	22	55
HS 70-300	70-240	95-300	50-150	70-185	185	40	35	22	55
HS 35-300-B	35-240	50-300	35-300	35-185	185	40	35	22	55
HS 50-300-B	50-240	70-300	50-300	50-185	185	40	35	22	55
HS 120-300	120-300	120-300	120-300	120-300	300	40	38	23	47

	HS 25-240	HS 50-240	HS 70-300	HS 35-300-B	HS 50-300-B	HS 120-300
housing	Spring steel zinc-plated					Stainless steel
clamp	Spring steel zinc-plated	Brass tin-plated		Spring steel zinc-plated		
screw	Steel zinc-plated					
nut	Steel zinc-plated	Brass tin-plated		Steel zinc-plated		

* Screw clamps have safety sign 'B' WG PN-EN 60947-7-1, (IEC 60947-7-1)

HS 2/50-240

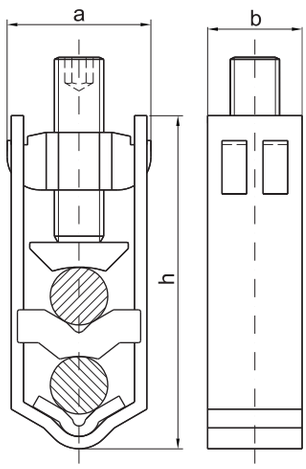

HS 2/50-240-B

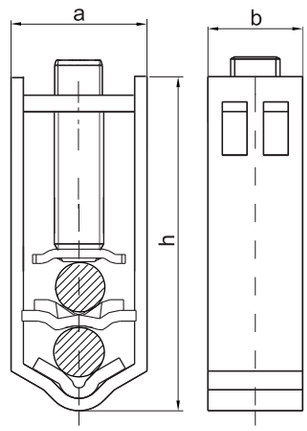

HS 2/50-240-D

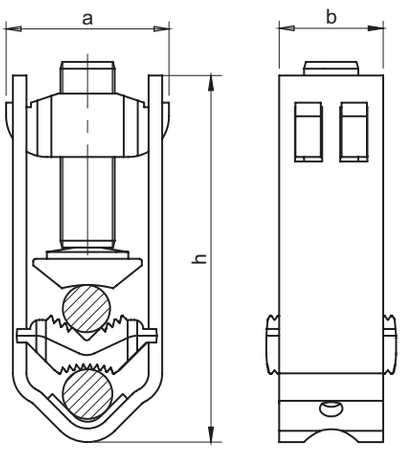

HS 2/50-240-E

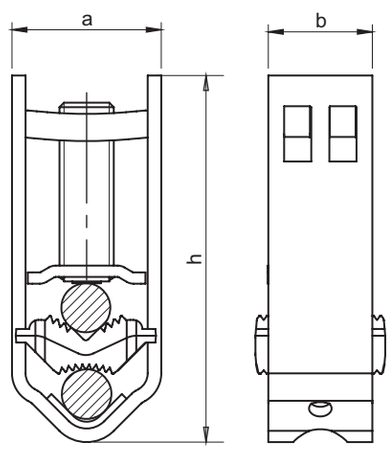

sm - multiwire sector shaped conductor (flexible)

rm - round multiwire conductor (flexible)

se - sector shaped conductor (rigid)

re - round conductor (rigid)

DETAIL	CROSS-SECTION [mm²]				NOMINAL CROSS-SECTION [mm²]	MAX TIGHTENING TORGUE [Nm]	DIMENSIONS		
	sm	se	rm	re			a	b	h
HS 2/50-240	50-185	50-240	35-150	35-185	185	40	35	22	81
HS 2/50-240-B	35-240	35-300	35-300	50-185	185	40	35	22	81
HS 2/50-240-D	50-185	50-240	35-150	35-185	185	40	36	23	81
HS 2/50-240-E	35-240	35-300	35-300	50-185	185	40	35	23	81

	HS 2/50-240	HS 2/50-240-B	HS 2/50-240-D	HS 2/50-240-E
clamp	Brass tin-plated	steel zinc-plated	ZAMAK tin-plated	
housing	spring steel zinc-plated			
screw	steel zinc-plated			
compression plate	Brass tin-plated		ZAMAK tin-plated	
nut	Brass tin-plated	spring steel zinc-plated		Brass tin-plated

* Screw clamps have safety sign 'B' WG PN-EN 60947-7-1, (IEC 60947-7-1)

Screw clamps v-klema type HS steel double 2/70-300

ROZTOCZE

HS 2/70-300

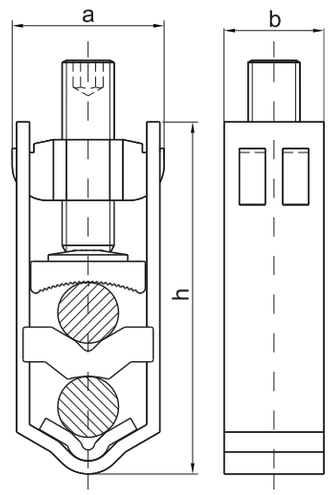

sm - multiwire sector shaped conductor (flexible)

rm - round multiwire conductor (flexible)

se - sector shaped conductor (rigid)

re - round conductor (rigid)

DETAIL	CROSS-SECTION [mm²]				NOMINAL CROSS-SECTION [mm²]	MAX TIGHTENING TORGUE [Nm]	DIMENSIONS		
	sm	se	rm	re			a	b	h
HS 2/70-300	70-240	95-300	50-120	70-150	185	30	35	22	81

	HS 2/70-300
clamp	Brass tin-plated
housing	spring steel zinc-plated
screw	steel zinc-plated
compression plate	Brass tin-plated
nut	Brass tin-plated

* Screw clamps have safety sign 'B' WG PN-EN 60947-7-1, (IEC 60947-7-1)

HM 2/10-70-A

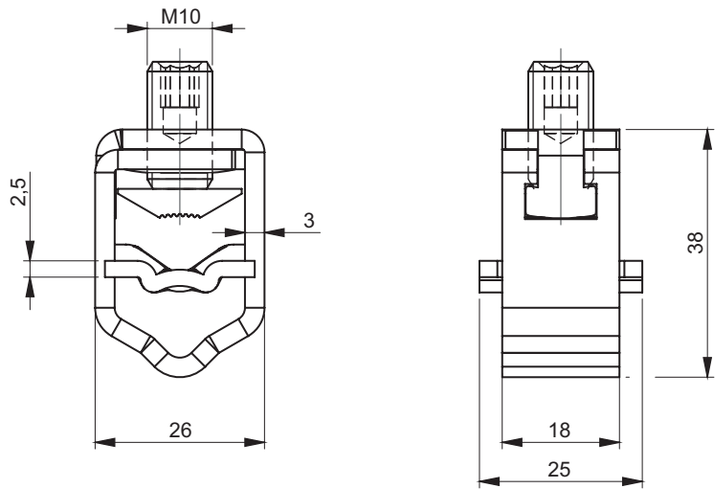

HM 2/10-70-B

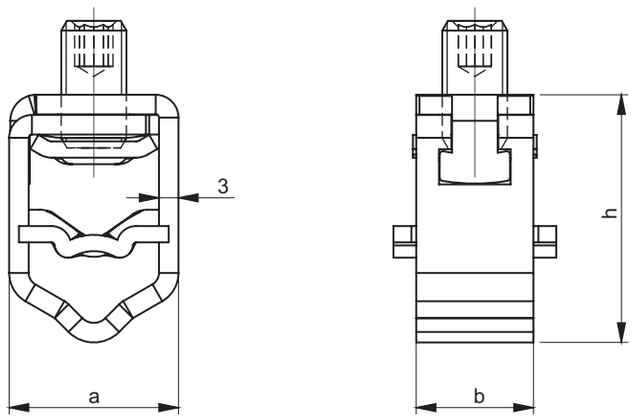

sm - multiwire sector shaped conductor (flexible)
rm - round multiwire conductor (flexible)
se - sector shaped conductor (rigid)
re - round conductor (rigid)

DETAIL	CROSS-SECTION [mm²]				MAX TIGHTENING TORGUE [Nm]	DIMENSIONS		
	sm	se	rm	re		a	b	h
HM 2/10-70-A	10-50	10-70	10-35	10-50	15	26	18	38
HM 2/10-70-B	10-50	10-70	10-35	10-50	15	26	18	38

	HM 2/10-70-A	HM 2/10-70-B
Clamp	Brass tin-plated	Steel zinc-plated
Housing	Steel zinc-plated	Steel zinc-plated
Screw	Steel zinc-plated	Steel zinc-plated
Compression plate	Copper tinned	Copper tinned

* Screw clamps have safety sign 'B' WG PN-EN 60947-7-1, (IEC 60947-7-1)

Connecting device RBK LZ6V
Terminal 4.601

Connecting device RBK LZ6V

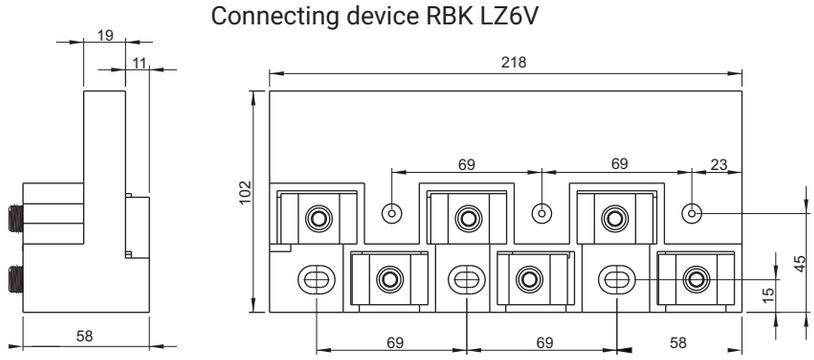

Terminals for connecting device 4.601.001

4.601.101, 4.601.201

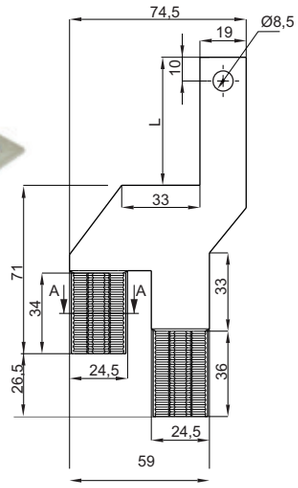

4.601.102

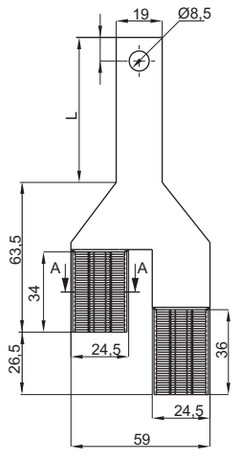

4.601.103, 4.601.203

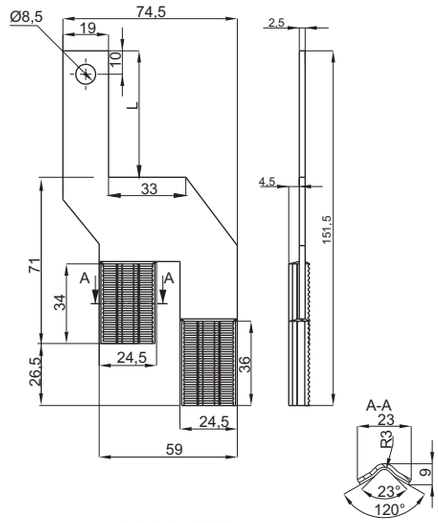

4.601.401

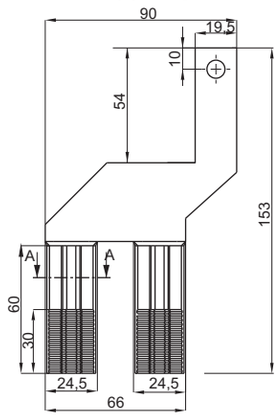

4.601.402

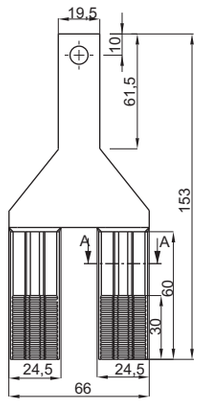

4.601.403

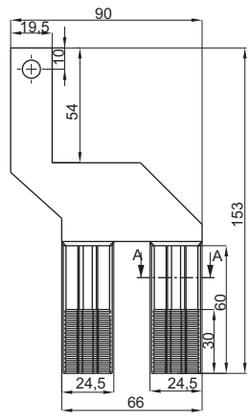

CATALOGUE NUMBER	NAME	MATERIAL	L [mm]
4.601.001	Connecting device LZ6V	Polyamide PA6 - colour white	-
4.601.101	Terminals	Tin-plated copper	54
4.601.201			42
4.601.102			63,5
4.601.202			50
4.601.103			54
4.601.203			42
4.601.401			-
4.601.402			-
4.601.403			-

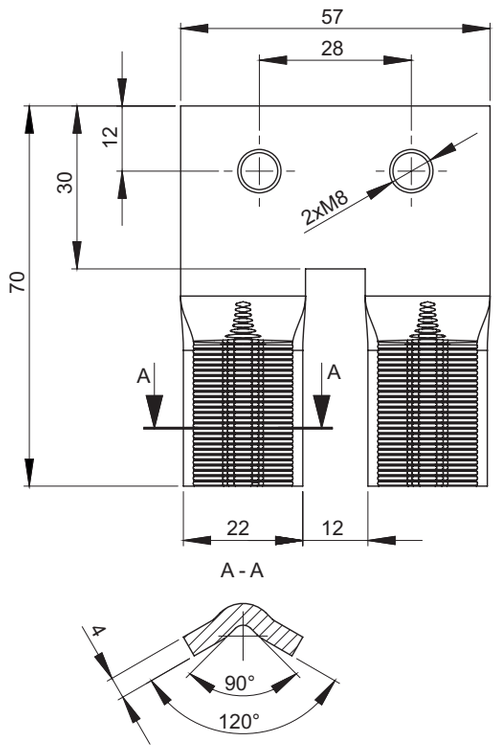

CATALOGUE NO.	DETAIL	MATERIAL
4.603.003	Terminal	Tin-plated copper

Terminal is dedicated to clamps pg.: 4-1 (in main catalogue) except 25-120 SW, 25-120 SW-B; 4-2 except 2,25-120 SW, 2/25-120 SW-B; 4-5; 4-6 (in main catalogue) except HS 2/70-240-C.

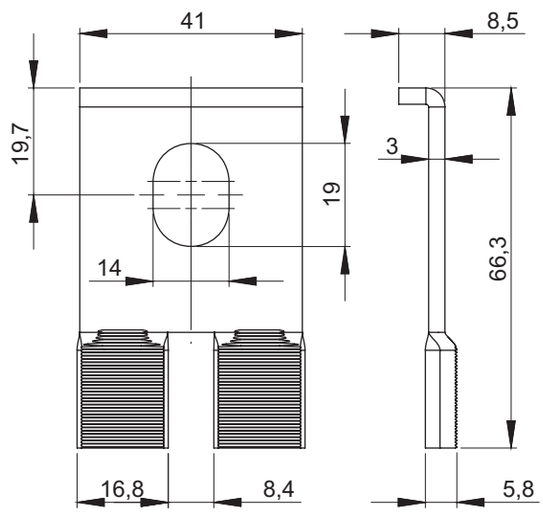

CATALOGUE NO.	DETAIL	MATERIAL
4.603.004	Terminal	Steel zinc plated

Terminal is dedicated to clamps HS 10-95 (pg. 4-4 in main catalogue)

TYPE T

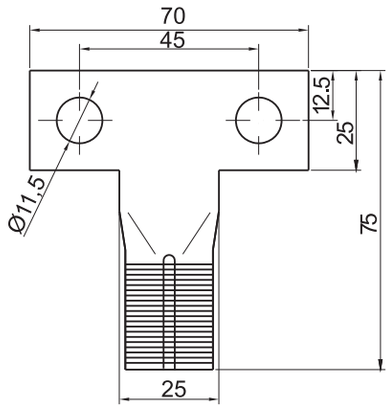

TYPE C

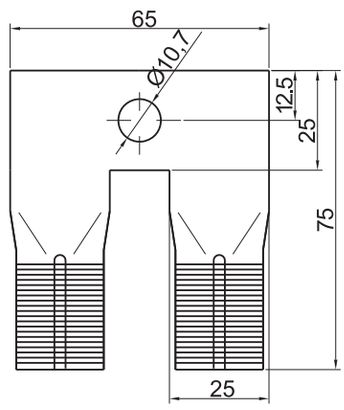

TYPE I/M

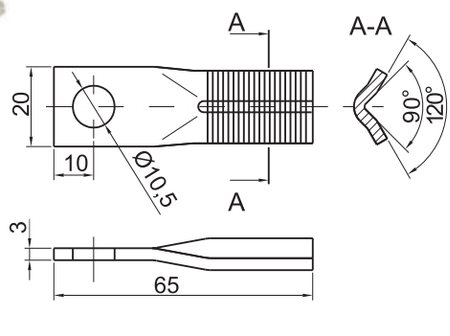

TYPE I/D

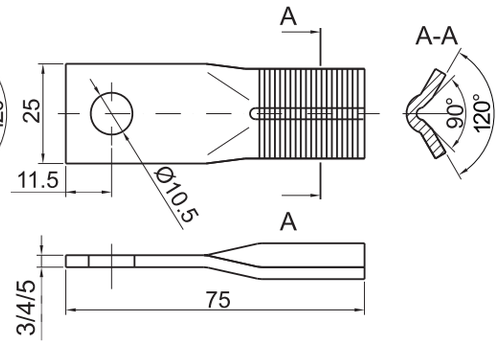

4-SCREW CLAMP

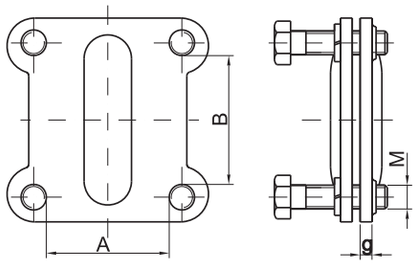

GROUND CLAMP

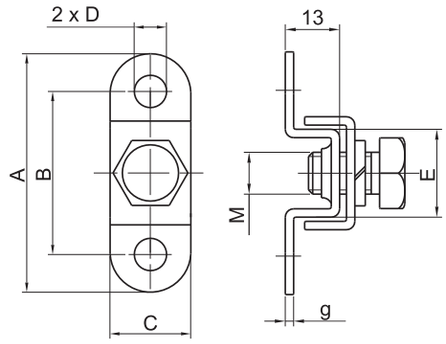

CAT. NUMBER	NAME	MATERIAL	A	B	C	D	E	g	M
4.406.001	Ground clamp	Steel zinc plated	53	39	18	ø 6,5	19	2	M8x16
4.406.002			62	42	21	ø 8,5	22	2,5	M10x16
4.405.001	4-Screw clamp	Steel zinc plated	20	25	-	-	-	3	M6
4.405.002			25	30	-	-	-	3	M6
4.405.003			30	30	-	-	-	3	M6
4.405.004			35	40	-	-	-	5	M8
4.405.005			40	40	-	-	-	5	M8
T, C, I/m, I/D	Terminals type **T, C, I/m, I/D** Cooper - tin plated								

V-KLEMY COVERS

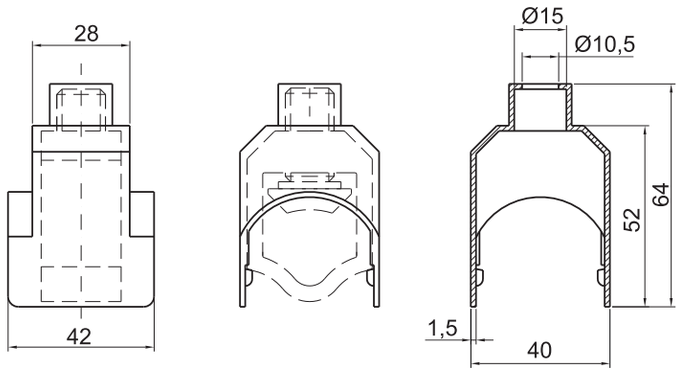

CTALOGUE NUMBER	NAME	MATERIAL
4.520.001.0X	V-klema cover	PA6-polyamide

COLORS [X]	
01	black
02	blue
03	red
04	green
05	yellow
06	grey

NOTICE:
V-klema covers can be used with screw clamps type:
50-240SW, 70-300SW, 50-300SW i 35-240SW

LINEAR CLAMP - ZLG
4.402.001

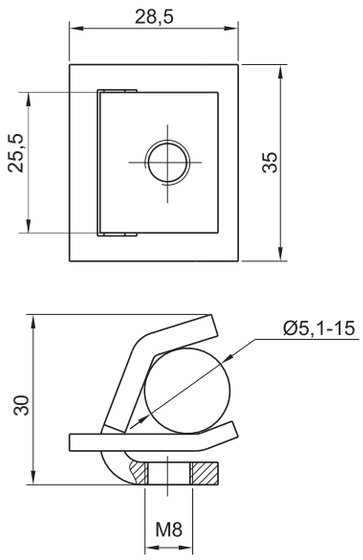

GOUND HOLDER
4.403.001

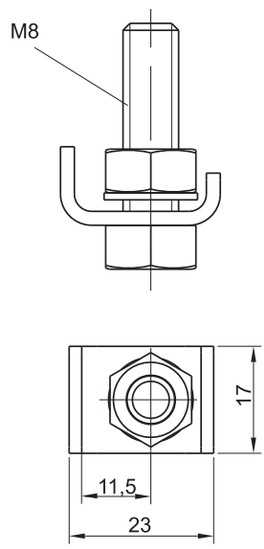

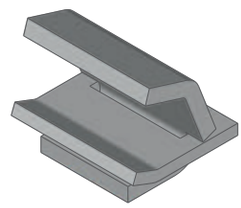

CTALOGUE NUMBER	NAME	MATERIAL
4.402.001	Linear clamp **ZLG**	Stainless steel
4.403.001	Ground clamp **ZU**	Stainless steel or steel zinc plated

ROZTOCZE

ROUND NUT

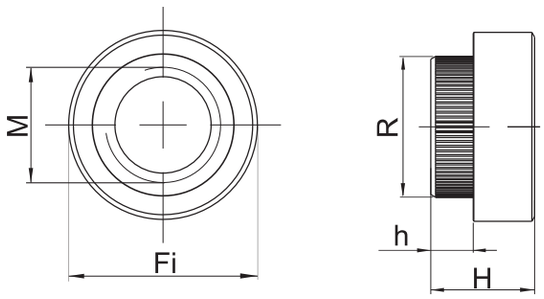

HEXAGONAL NUT

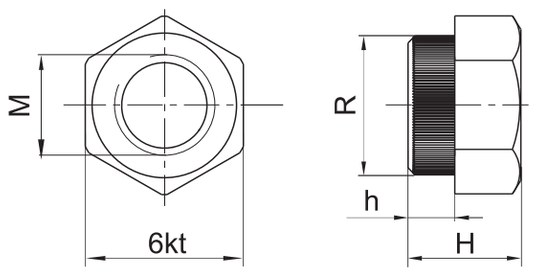

SHAPE	DIMENSIONS						MATERIAL	CAT. NUMBER
	M	Fi	6kt	Fi R	H	h		
	12	20		14,9	11	4,5	Steel - zinc plated	**NR.01.00**
	12	20		14,9	10,5	4	Steel - zinc plated	**NR.01.02**
	12	19		15	11	4	Steel - zinc plated	**NR.01.03**
	10	18		13	11	4,5	Steel - zinc plated	**NR.03.01**
	8	15		10,8	9,5	4,5	Steel - zinc plated	**NR.02.01**
	6	12		8,5	6,8	2,8	Steel - zinc plated	**NR.04.01**
	5	10		7,5	6,8	2,8	Steel - zinc plated	**NR.05.01**
	12		19	14,8	12	4,5	Steel - zinc plated	**NR.01.04**
	10		17	12,9	11	4,5	Steel - zinc plated	**NR.03.02**
	8		13	10,7	9,5	4,5	Steel - zinc plated	**NR.02.02**

4.480.001

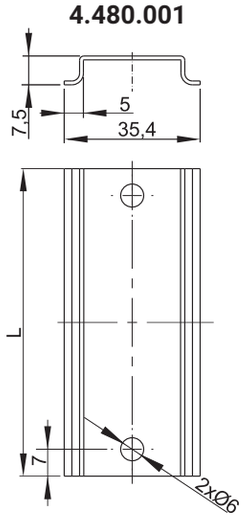

4.480.002

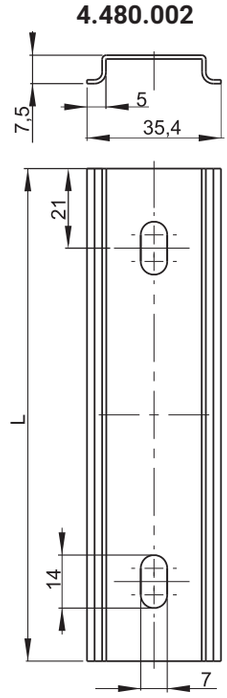

4.480.003

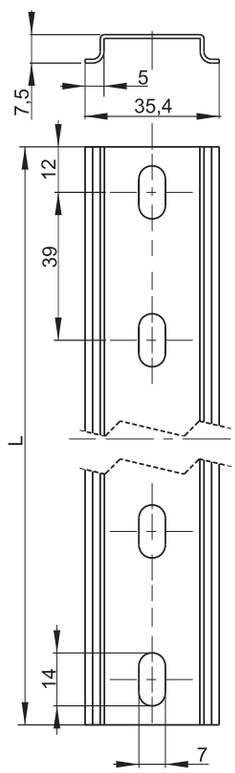

4.480.004

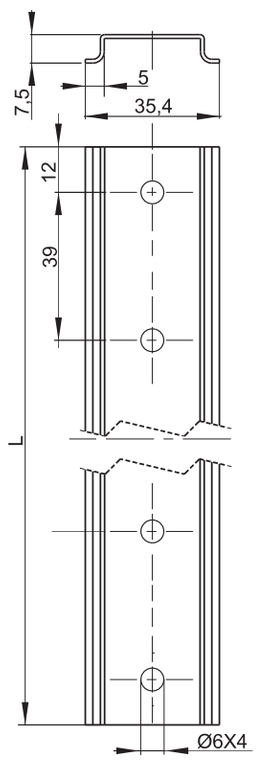

CAT. NUMBER	DIMENSION L	MATERIAL
4.480.001	80	Steel - zinc plated
4.480.002.L	130	Steel - zinc plated
4.480.002.L	140	Steel - zinc plated
4.480.002.L	260	Steel - zinc plated
4.480.003	360	Steel - zinc plated
4.480.004	360	Steel - zinc plated

NOTICE: Other dimensions on request

Cable clasp 4.460, 4.461, 4.462

4.460.001

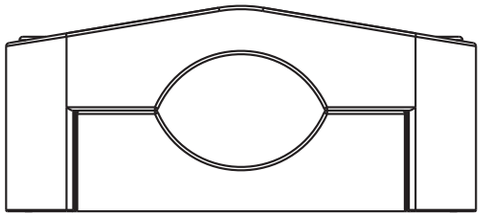

4.461.001

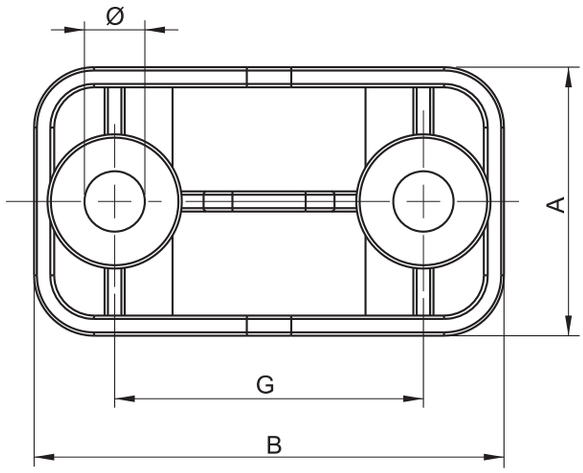

4.462.001

CAT. NUMBER	NAME	MATERIAL	DIAMETER	DIMENSIONS			
				Φ	A	B	G
4.460.001	Clasp ø27	Polyamide PA6 colour RAL	17-27	9	40	70	46
4.461.001	Clasp ø40		25-46	12	58	97	68
4.462.001	Clasp ø75		47-73	13	60	126,5	95

Accessories

1 Locking systems

2 Locks Latches

3 Hinges

4 Clamps

5 Accessories

6 Gasketing profiles

7 Custom products

Holder 4.415, 4.414

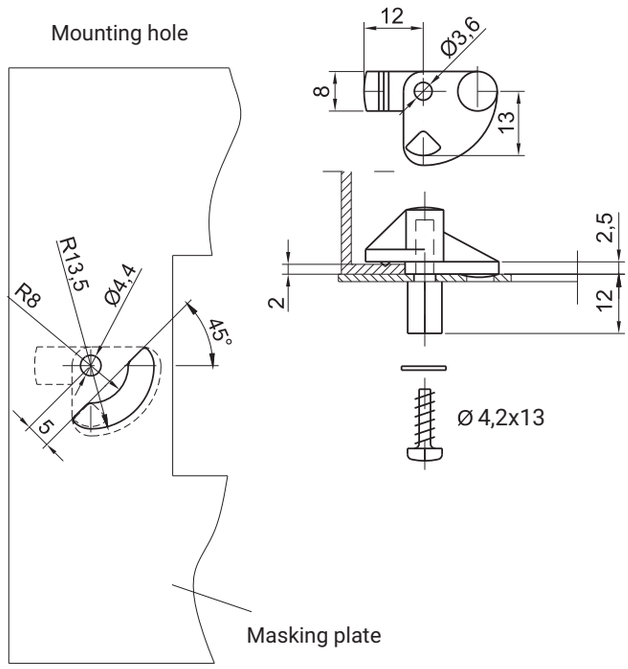

CAT. NUMBER	NAME	MATERIAL
4.415.001	Masking plate holder	Polyamide

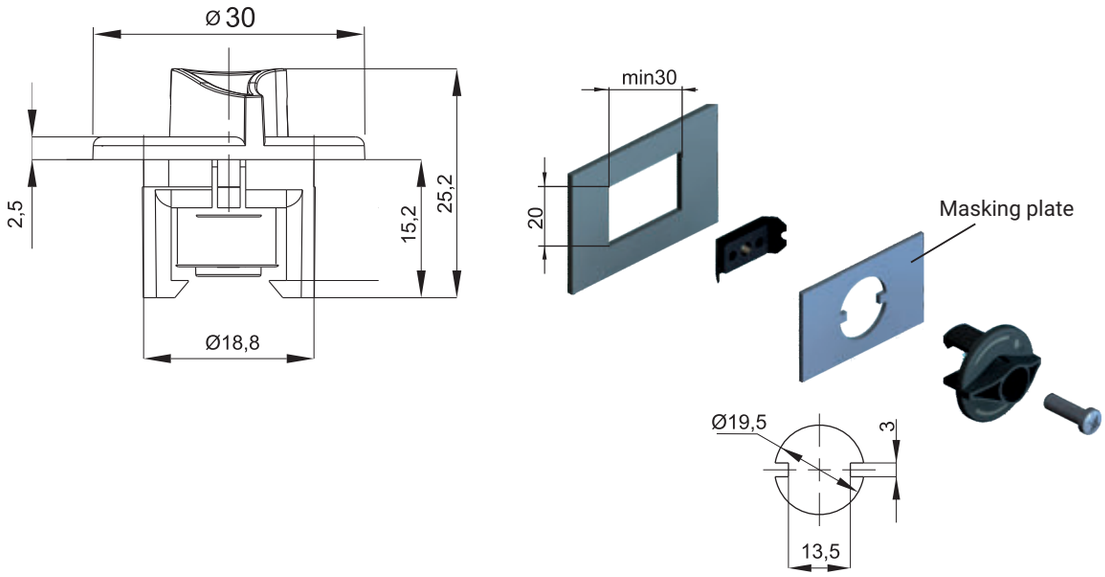

CAT. NUMBER	NAME	MATERIAL
4.414.001	Masking plate holder	Polyamide

* possibility order parts according to RAL

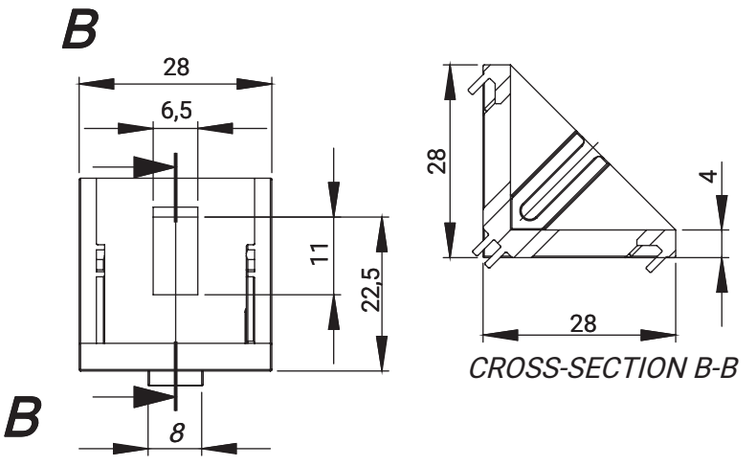

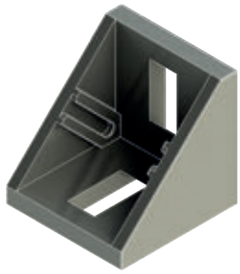

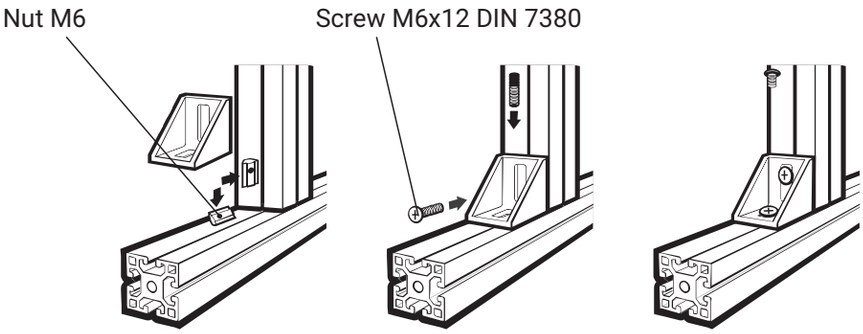

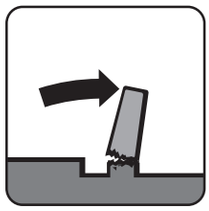

Use and installation

CAT. NUMBER	XY	FINISH	COMPONENTS	MATERIAL
4.500.001.XY	01	No	Connector	Zamak 5
	11	RAL 7035*		
4.500.001.02		-	Nut M6	Zamak 5
4.500.001.03		-	Screw M6x12 DIN 7380	Steel zinc plated

* possibility to make a different color

Installation nut

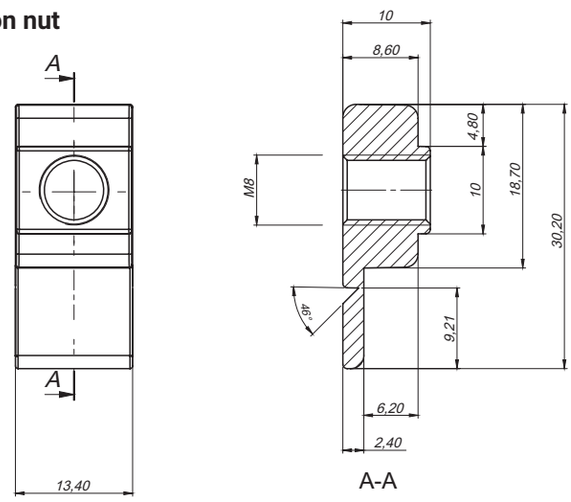

CAT. NUMBER	MATERIAL
4.501.001	ZAMAK

Holder with seal 4.417
Holder with seal 4.416

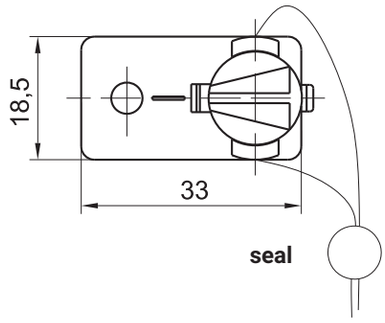

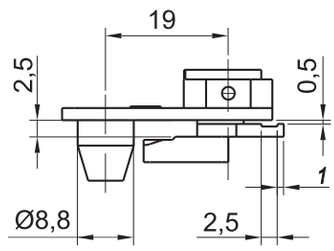

CAT. NUMBER	NAME	MATERIAL
4.417.001	Holder with seal	Polyamide

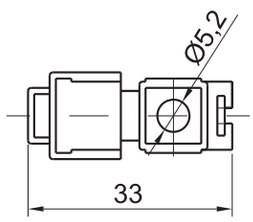

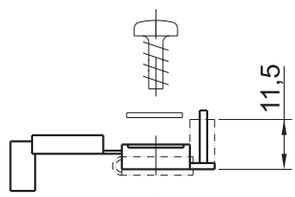

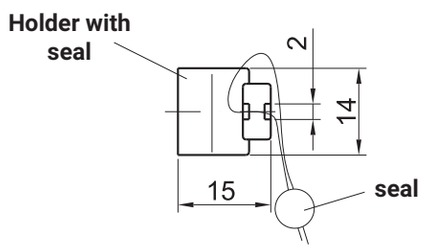

CAT. NUMBER	NAME	MATERIAL
4.416.001	Holder with seal	Polyamide

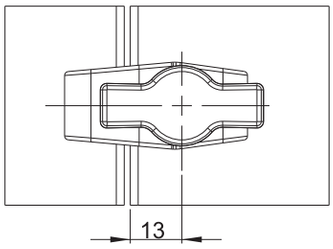

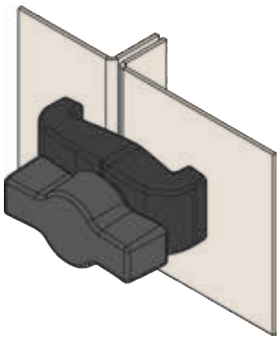

CAT. NUMBER	NAME	MATERIAL
4.411.001	Tommy screw	Polyamide-PA6 GF30 RAL/Steel zinc plated

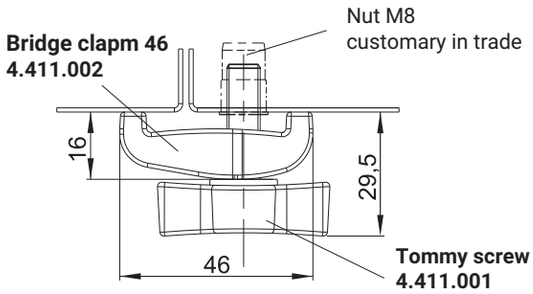

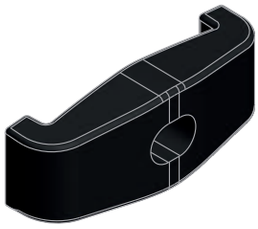

Bridge clapm 56
4.411.003

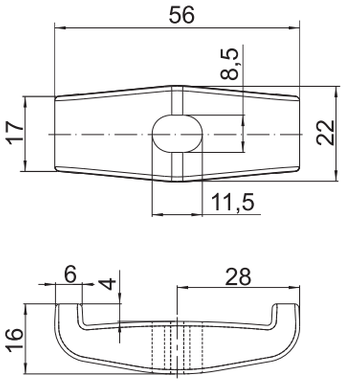

Bridge clapm 80
4.411.004

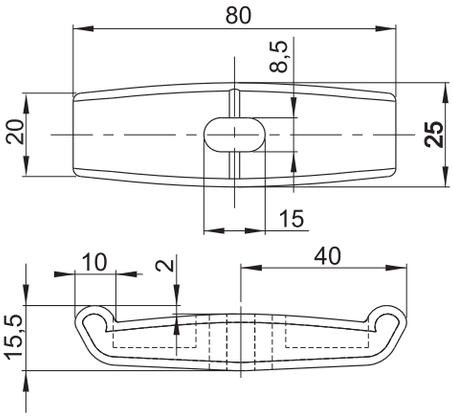

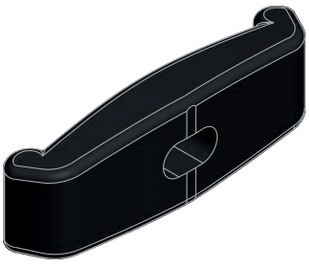

CAT. NUMBER	NAME	MATERIAL
4.411.002	Bridge clamp 46	Polyamide PA6 Gf30
4.411.003	Bridge clamp 56	
4.411.004	Bridge clamp 80	

Bridge clamp system 4.419
Connector 4.429

4.419.001

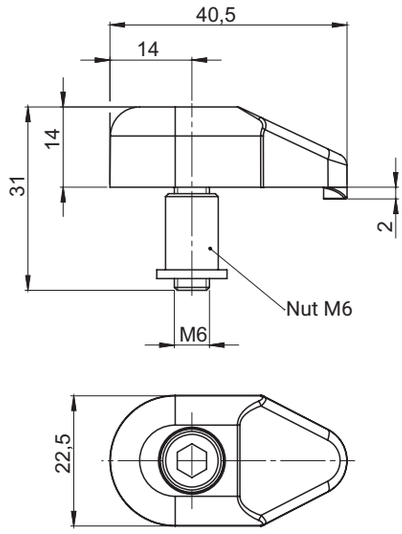

4.419.002

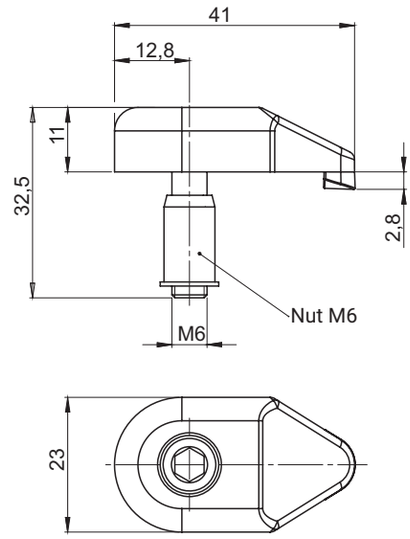

CATALOGUE NO.	DETAL	MATERIAL	FINISH [C]			
			Nickel	Zink plated	RAL 9005	RAL 7035
4.419.001-X	Metal bridge clamp	ZAMAK	01	02	03	04
4.419.002	Plastic bridge clamp	Polyamide	RAL 9005			

Connector
4.429.001

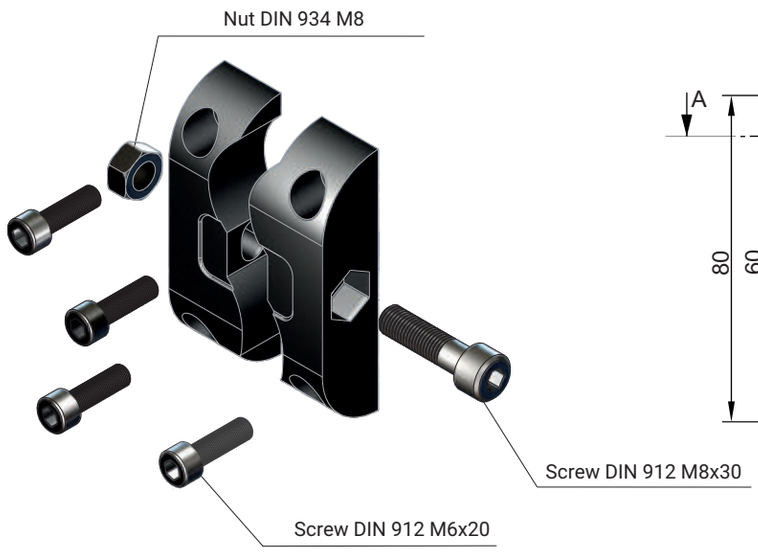

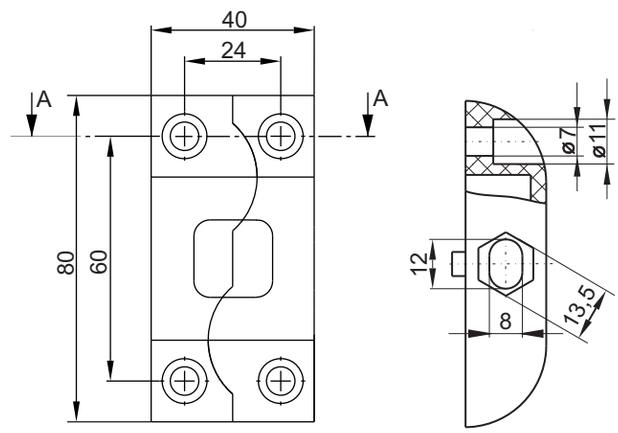

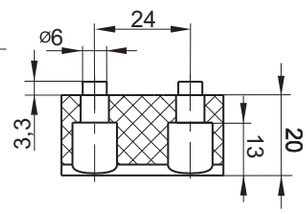

CROSS - SECTION A-A

NAME	MATERIAL	FINISH [C]
		RAL 9005
Connector 4.429.001	Polyamide - PA6 GF30	07

ADJUSTABLE FEET
4.431.001
4.431.002
4.431.003
4.431.008

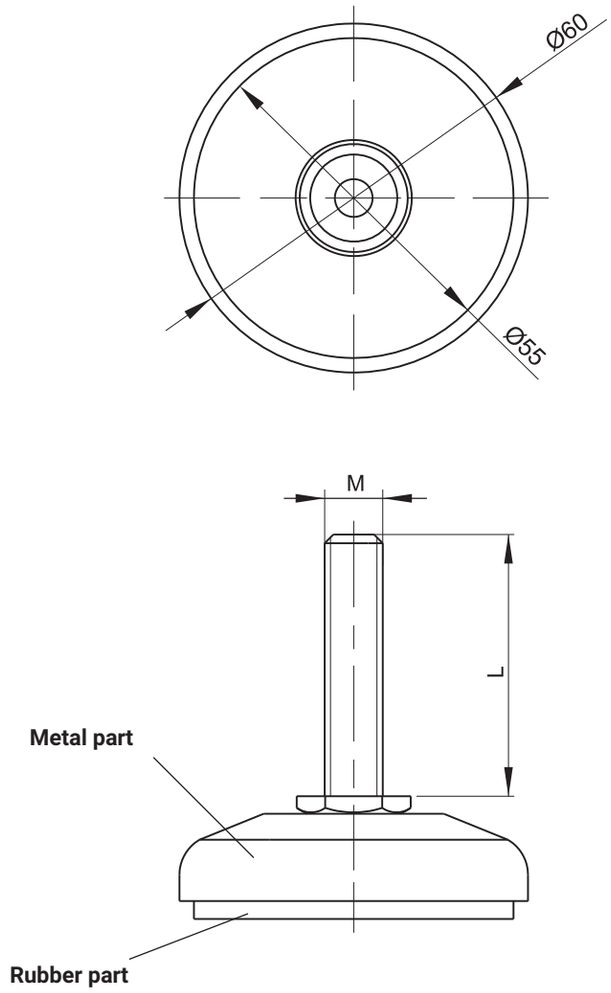

CAT. NUMBER	DIMENSION		NAME	MATERIAL
	M	L		
4.431.001	10	45	Adjustable foot	Steel zinc plated, Rubber
4.431.001SN	10	45	Adjustable foot	Stainless steel, Rubber
4.431.002	12	45	Adjustable foot	Steel zinc plated, Rubber
4.431.002SN	12	45	Adjustable foot	Stainless steel, Rubber
4.431.003	10	100	Adjustable foot	Steel zinc plated, Rubber
4.431.003SN	10	100	Adjustable foot	Stainless steel, Rubber
4.431.008	12	100	Adjustable foot	Steel zinc plated, Rubber
4.431.008SN	12	100	Adjustable foot	Stainless steel, Rubber
4.431.009	10	150	Adjustable foot	Steel zinc plated, Rubber
4.431.009SN	10	150	Adjustable foot	Stainless steel, Rubber
4.431.010	12	150	Adjustable foot	Steel zinc plated, Rubber
4.431.010SN	12	150	Adjustable foot	Stainless steel, Rubber

4.510.001

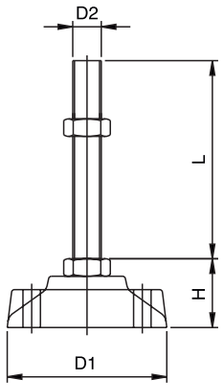

NAME	COMPONENTS			MATERIAL	
Adjustable foot	Screw			Steel zinc plated	
	Base			Polyamide	
CAT. NUMBER	**D1**	**D2**	**H**	**L**	**LOAD**
4.510.001.XXX	100	M16	42	100,150, 200,250	600kg
4.510.002.XXX		M20	46	75,100,150, 200,250	800kg
4.510.003.XXX		5/8"	43	100,150	600kg
4.510.004.XXX		3/4"	45	100,150	800kg
4.510.005.XXX	65	M16	42	100,150	600kg
4.510.006.XXX		M20	46	100,150	800kg

: where XXX=L

4.511.001

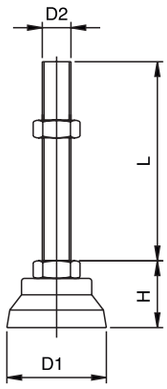

NAME	COMPONENTS			MATERIAL	
Adjustable foot	Screw			Steel zinc plated	
	Base			Polyamide	
CAT. NUMBER	**D1**	**D2**	**H**	**L**	**LOAD**
4.511.001.XXX	65	M16	42	100,150, 200,250	600kg
4.511.002.XXX		M20	46	75,100,150, 200,250	800kg
4.511.003.XXX		5/8"	43	100,150	600kg
4.511.004.XXX		3/4"	45	100,150	800kg
4.511.005.XXX		M16	42	100,150	600kg
4.511.006.XXX		M20	46	100,150	800kg

: where XXX=L

4.512...

4.512.001

4.512.002
4.512.003

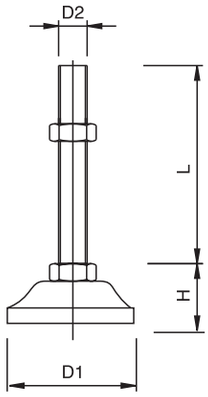

NAME	COMPONENTS			MATERIAL	
Adjustable foot	Screw			Stainless steel 304	
	Base			Stainless steel 304	
CAT. NUMBER	**D1**	**D2**	**H**	**L**	**LOAD**
4.512.001.XXX	50	M16	31	100,150	1500kg
4.512.002.XXX	70	M16	31	100,150	1500kg
4.512.003.XXX		M20	35	100,150	2000kg

: where XXX=L

4.513.001

NAME	COMPONENTS			MATERIAL	
Adjustable foot	Screw			Steel zinc plated	
	Base			Polyamide	
CAT. NUMBER	**D1**	**D2**	**H**	**L**	**LOAD**
4.513.001.XXX	70	M16	42	100,150, 200,250	600kg
4.513.002.XXX		M20	46	75,100,150, 200,250	800kg
4.513.003.XXX		5/8"	43	100,150	600kg
4.513.004.XXX		3/4"	45	100,150	800kg
4.513.005.XXX		M16	42	100,150	600kg
4.513.006.XXX		M20	46	100,150	800kg

: where XXX=L

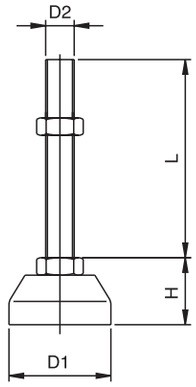

4.514.001

NAME	COMPONENTS			MATERIAL	
Adjustable foot	Screw			Steel zinc plated	
	Base			Polyamide	
CAT. NUMBER	**D1**	**D2**	**H**	**L**	**LOAD**
4.514.001.XXX	55	M12	26	50,75 100,150,	300kg
4.514.002.XXX		M16	28	70,100,150,	500kg
4.514.003.XXX		1/2"	27	75,100,150	300kg
4.514.004.XXX		5/8"	29	75,100,150	500kg
4.514.005.XXX	75	M16	30	100,150	500kg
4.514.006.XXX		5/8"	31	100,150	500kg

: where XXX=L

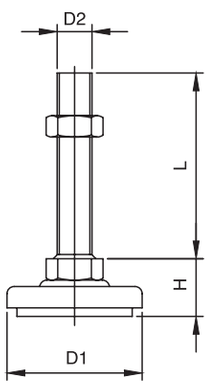

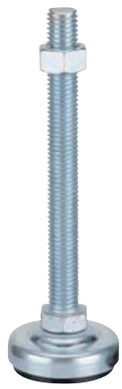

4.515.001

NAME	COMPONENTS			MATERIAL	
Adjustable foot	Screw			Steel zinc plated	
	Base			Steel zinc plated with rubber from below	
CAT. NUMBER	**D1**	**D2**	**H**	**L**	**LOAD**
4.515.001.XXX	40	M10	20	50,100	200kg
4.515.002.XXX		M12	23	50,100	300kg
4.515.003.XXX	55	M12	26	50,75 100,150,	300kg
4.515.004.XXX		M16	28	70,100,150,	500kg
4.515.005.XXX		1/2"	27	75,100,150	300kg
4.515.006.XXX		5/8"	29	75,100,150	500kg
4.515.007.XXX	75	M16	30	100,150	500kg
4.515.008.XXX		5/8"	31	100,150	500kg

: where XXX=L

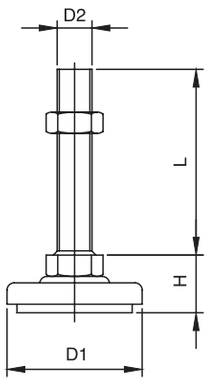

TX-102-2

Adjustable feet 4.516, 4.517, 4.518

ROZTOCZE

4.516.001

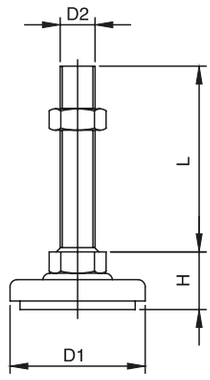

NAME	COMPONENTS			MATERIAL	
Adjustable foot	Screw			Steel zinc plated	
	Base			Steel zinc plated with rubber from below	
CAT. NUMBER	**D1**	**D2**	**H**	**L**	**LOAD**
4.516.001.XXX	40	M10	21	100,150	200kg
4.516.002.XXX		M12	23	100,150	300kg
4.516.003.XXX		1/2"	23	100,150	300kg
4.516.004.XXX	60	M12	30	100,150	300kg
4.516.005.XXX		M16	32	100	500kg
4.516.006.XXX		1/2"	30	50,100	300kg
4.516.007.XXX		5/8"	32	100	500kg

: where XXX=L

4.517.001
with movable screw

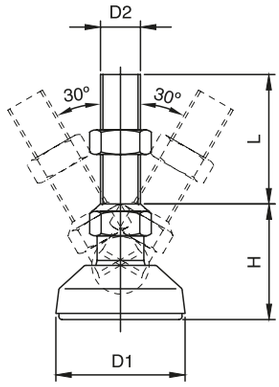

NAME	COMPONENTS			MATERIAL	
Adjustable foot	Screw			Steel zinc plated	
	Base			Polyamide	
CAT. NUMBER	**D1**	**D2**	**H**	**L**	**LOAD**
4.517.001.XXX	65	M16	39	150	300kg
4.517.002.XXX		M16	39	100	300kg
4.517.003.XXX		5/8'''	39	100	300kg

: where XXX=L

4.518.001

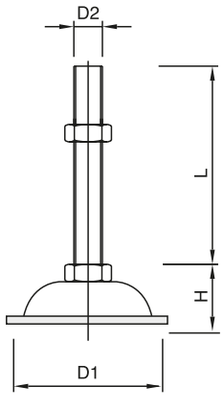

NAME	COMPONENTS			MATERIAL	
Adjustable foot	Screw			Stainless steel 304	
	Base			Stainless steel 304	
CAT. NUMBER	**D1**	**D2**	**H**	**L**	**LOAD**
4.518.001.XXX	50	M10	18	50, 100	150kg
4.518.002.XXX		M12	20	50, 75, 100	200kg
4.518.003.XXX		1/2"	20	50, 75, 100	200kg
4.518.004.XXX	70	M12	27	50, 75, 100,150	300kg
4.518.005.XXX		M16	30	50, 75, 100,150	400kg
4.518.006.XXX		1/2"	27	50, 75, 100	300kg
4.518.007.XXX		5/8"	30	100	400kg

: where XXX=L

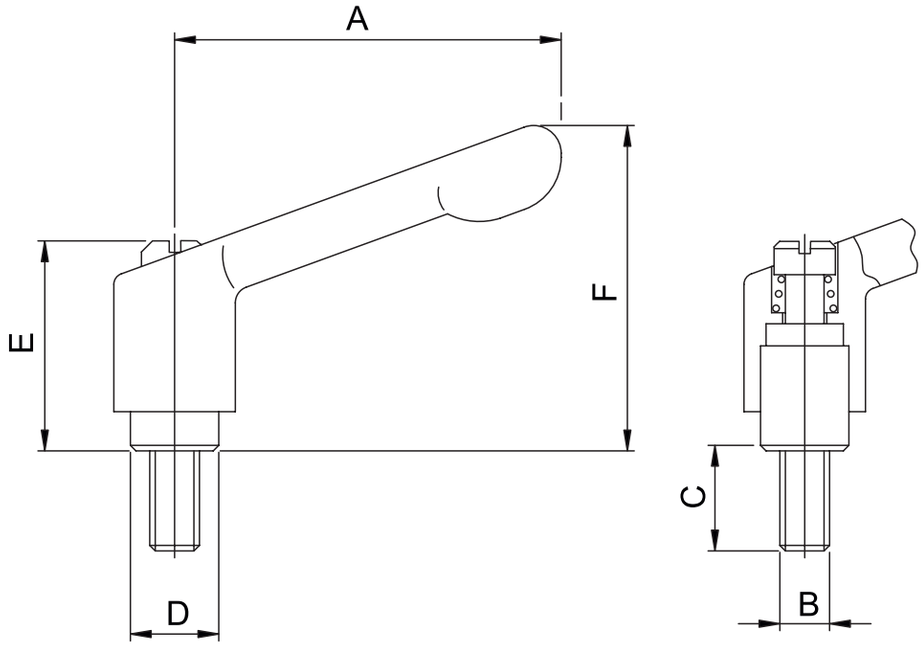

(mm)

NAME	COMPONENTS								MATERIAL						
Adjustable lever	Handle								ZAMAK 5						
	Spindle								Stainless steel						
CAT. NUMBER	**A**	**B**	**C**										**D**	**E**	**F**
4.530.A.B.C-X	45	M5	10	15	20	25	30	--	--	--	--	--	10	24.5	35
	45	M6	10	--	20	--	30	40	50	--	--	--	10	24.5	35
	63	M6	10	--	20	--	30	40	50	--	--	--	13.5	31	45
	63	M8	10	--	20	--	30	40	50	--	--	--	13.5	31	45
	78	M8	10	--	20	--	30	40	50	--	--	--	16	36	55
	78	M10	10	--	20	--	30	40	50	--	--	--	16	36	55
	92	M10	--	--	20	--	30	40	50	60	--	--	19	43	65
	92	M12	--	--	20	--	30	40	50	60	--	--	19	43	65
	108	M12	--	--	--	--	30	40	50	60	70	--	23	50.5	76
	108	M16	--	--	--	--	--	40	50	60	70	80	23	50.5	76

4.530.A.B.C-X
- Finish
- Thread length
- Thread type
- Length of the handle

FINISH [X]		
RAL 9005	RAL 7035	RAL 2011
01	02	03

Door bockade 4.401

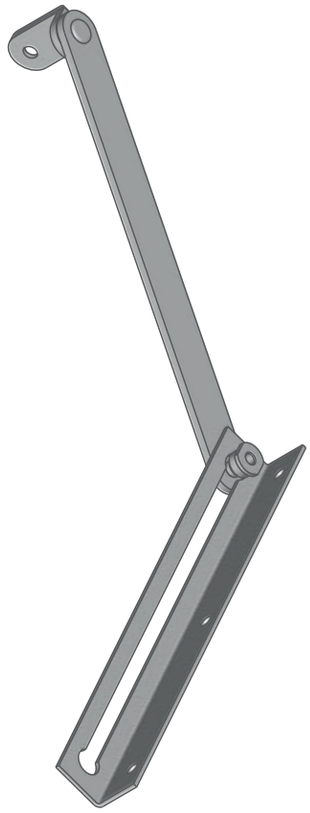

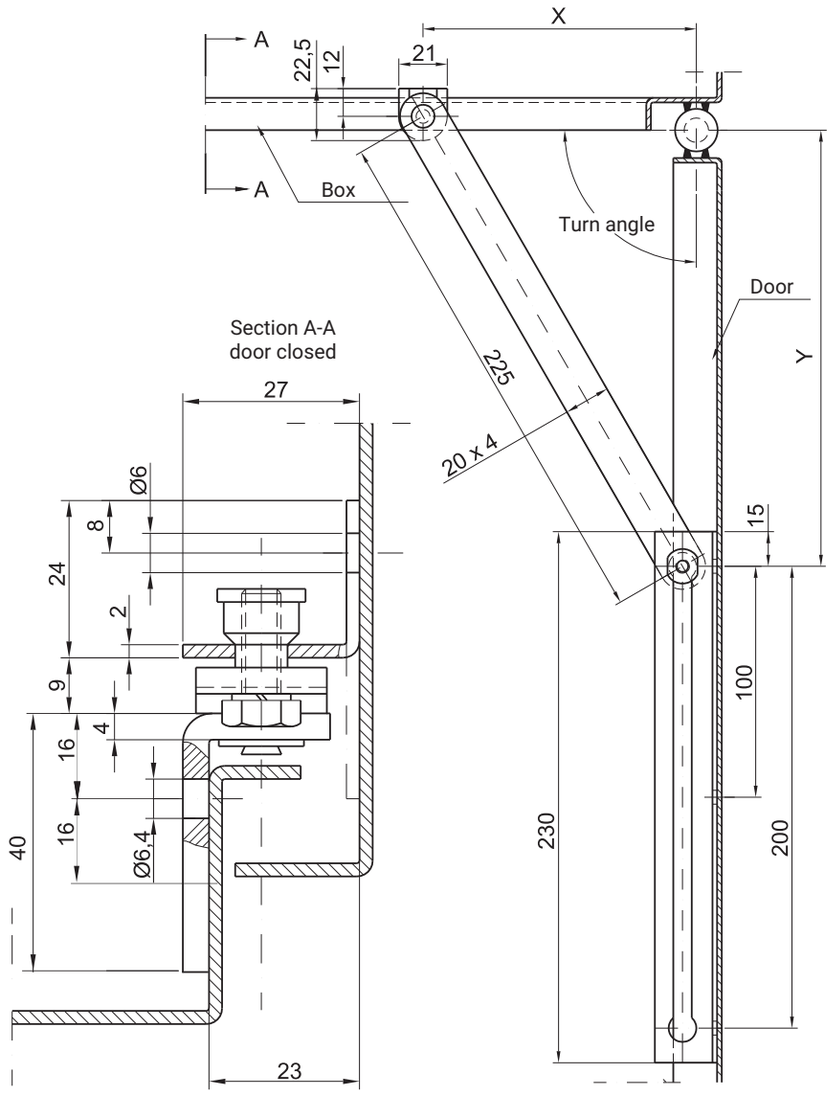

CAT. NUMBER	NAME	MATERIAL	TURN ANGLE	DIMENSION [mm]		MIN. DOOR WIDTH
				X	Y	
4.401.001	Door blockade	Steel zinc plated	90°	140	176	399
			105°	120	162	385
			120°	110	149	372
			135°	100	144	367

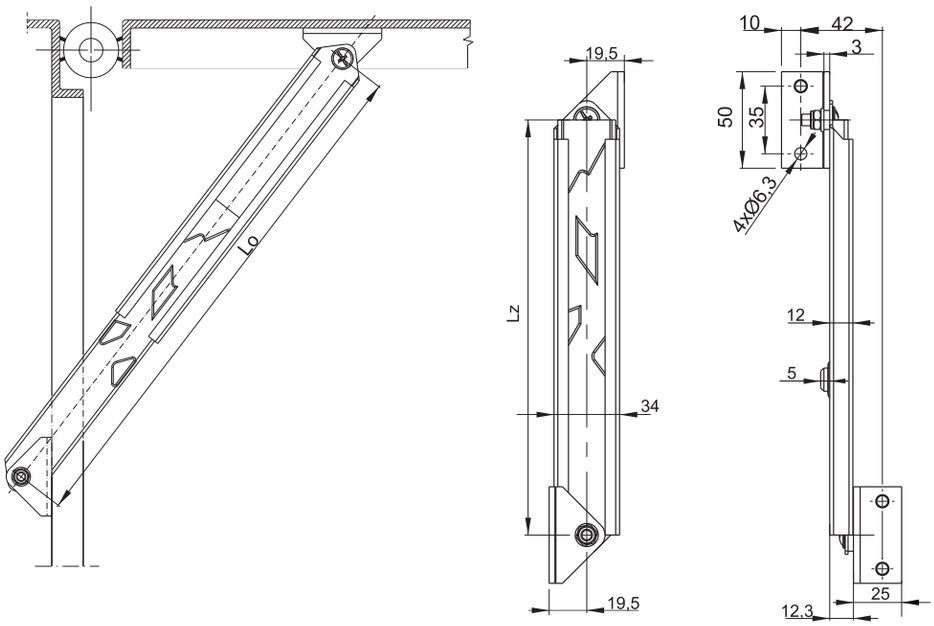

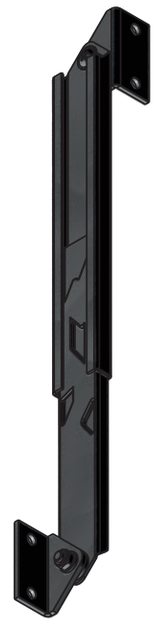

CAT. NUMBER	NAME	MATERIAL	Lz - closed	Lo - open
4.401.101	Telescopic blockade	Steel zinc plated	215	335
4.401.102			395	695

Version A

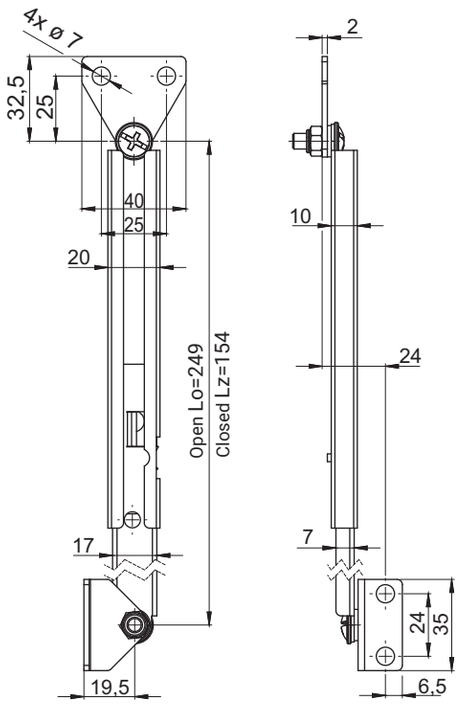

Version B

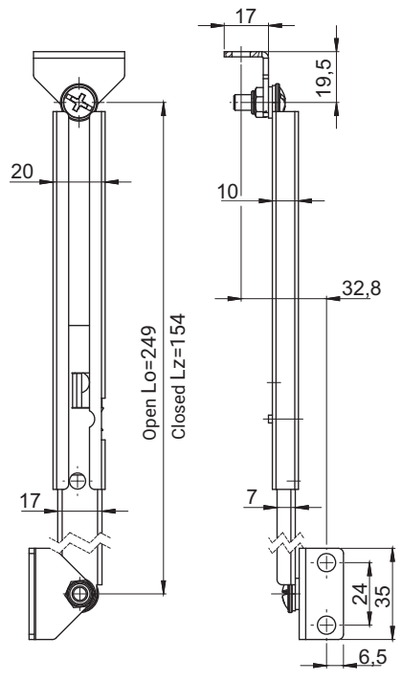

CATALOGUE NO.	VERSION	DETAL	VERSION	MATERIAL
4.401.105	A	Telescopic blockade	Left	Steel zinc plated
4.401.106			Right	
4.401.107	B		Left	
4.401.108			Right	

Door bockade 4.401.20X, 4.401.30X

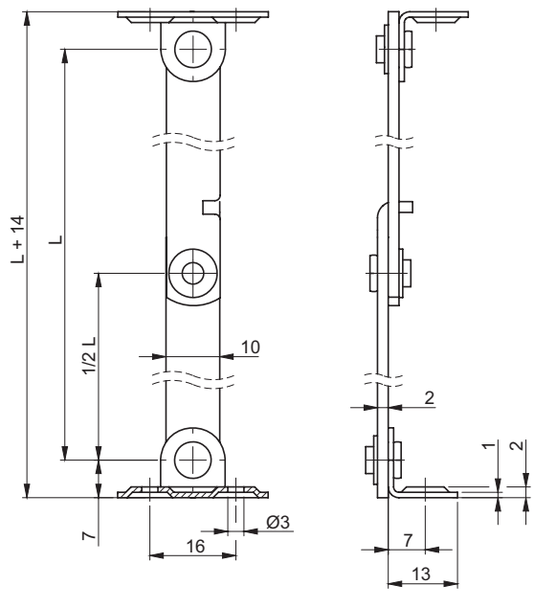

CATALOGUE NUMBER	Dimension L [mm]	MATERIAL
4.401.200	292	Steel zinc plated
4.401.201	252	
4.401.202	202	
4.401.203	135	
4.401.200SN	292	Stainless steel
4.401.201SN	252	
4.401.202SN	202	
4.401.203SN	135	

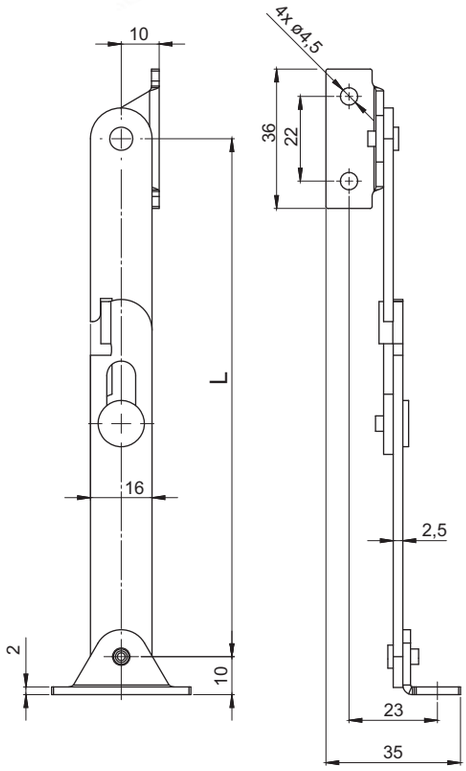

Left version **Right version**

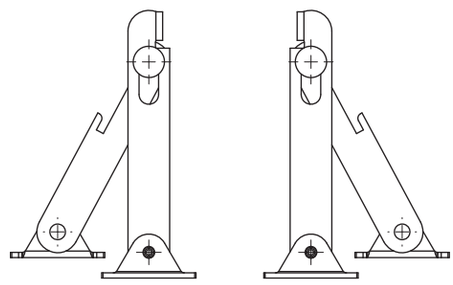

CATALOGUE NO.	VERSION	L	MATERIAL
4.401.301	Right	290	Steel zinc plated
4.401.301SN			Stainless steel
4.401.302	Left		Steel zinc plated
4.401.302SN			Stainless steel
4.401.303	Right	202	Steel zinc plated
4.401.303SN			Stainless steel
4.401.304	Left		Steel zinc plated
4.401.304SN			Stainless steel
4.401.305	Right	135	Steel zinc plated
4.401.305SN			Stainless steel
4.401.306	Left		Steel zinc plated
4.401.306SN			Stainless steel

Screw **4.430. ...**

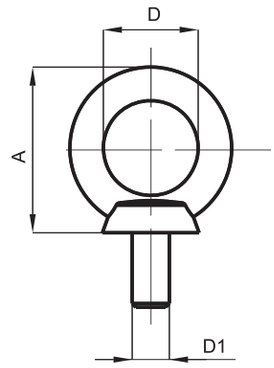

Version	D1	A	D
4.430.001	M8	37	ø20,5
4.430.002	M10	44,5	ø25,5
4.430.003	M12	53,5	ø29,8
4.430.004	M14	64	ø34,5
4.430.005	M16	64	ø34,5

CAT. NUMBER	MATERIAŁ
4.430....	Steel zinc plated

BOX HOLDER
4.410....

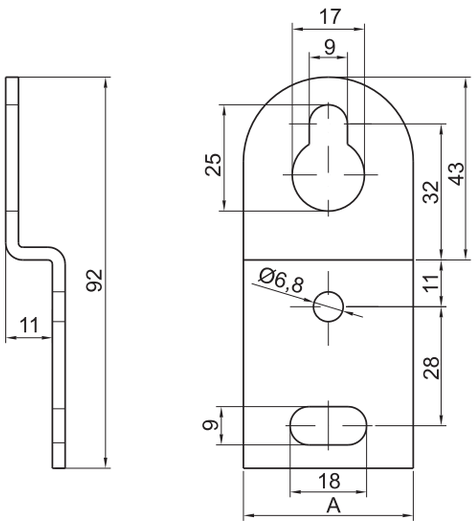

TRAPEZIUM NUT
4.409....

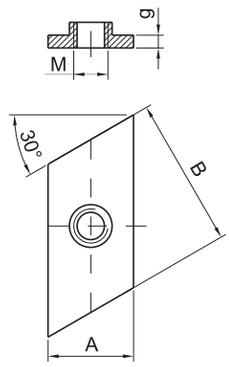

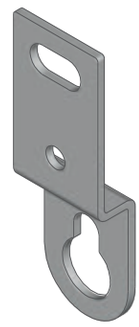

BOX HOLDER LOWER

BOX HOLDER UPPER

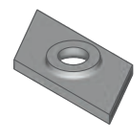

CAT. NUMBER	NAME	MATERIAL	A	B	G	M
4.409.003	Trapezium nut	Steel zinc plated	20	35	3	M8
4.409.002			15	20	3	M8
4.409.001			12	30	3	M6
4.410.001	Box holder		30	2,5	-	-
4.410.002			40	3	-	-

Padlock 4.KD, 4.KDZN

stainless steel

PADLOCK
4.KD.001

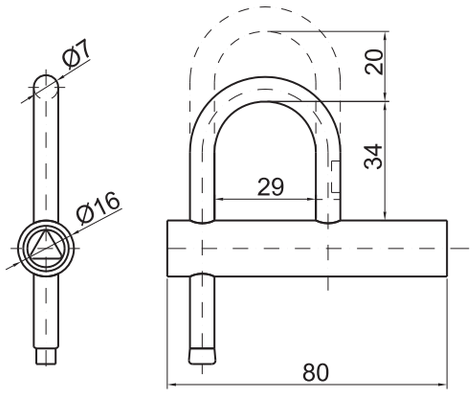

PADLOCK SN
4.KDSN.001

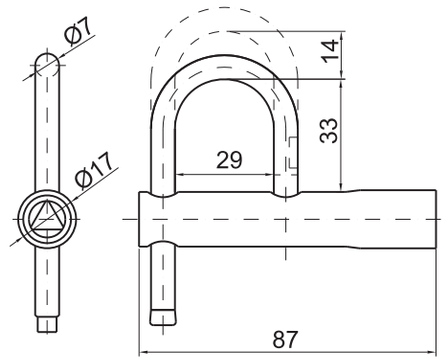

PADLOCK SN
4.KDZN.001

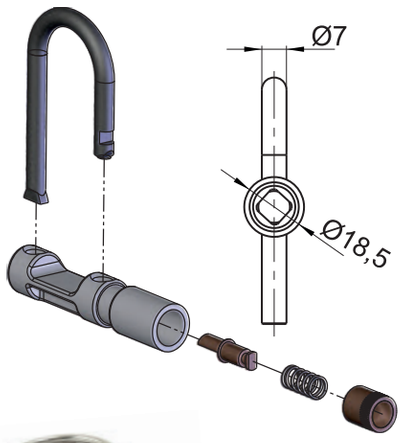

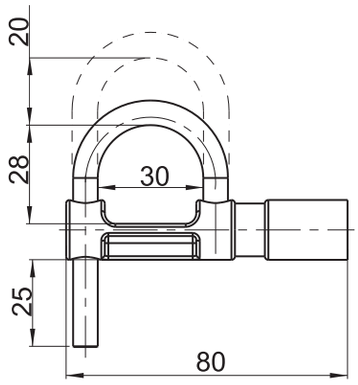

SELF-LOCKING PADLOCK
4.KDZN.002

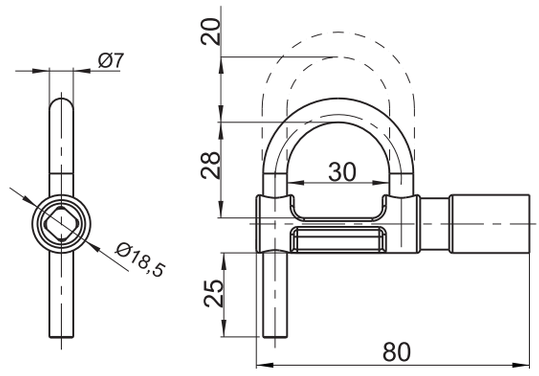

KEY
4.KDZN.002.06

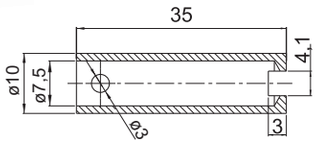

INSERTS [X] 4.KD.001, 4.KDSN.001, 4.KDZN.001			
T9	KW8	KW6	C9

CAT. NUMBER	NAME	MATERIAL
4.KD.001	Padlock KD	Steel zinc plated
4.KDSN.001	Padlock KDSN	Stainless steel- 1.4301
4.KDZN.001	Padlock KDZN	Zamak - zinc plated
4.KDZN.002	Self-locking padlock KDZN	
4.KDZN.002.06	Key for padlock KDZN002	Steel zinc plated

How to order : 4.KDZN.001 — KW8

Type of lock

Type of insert [X]

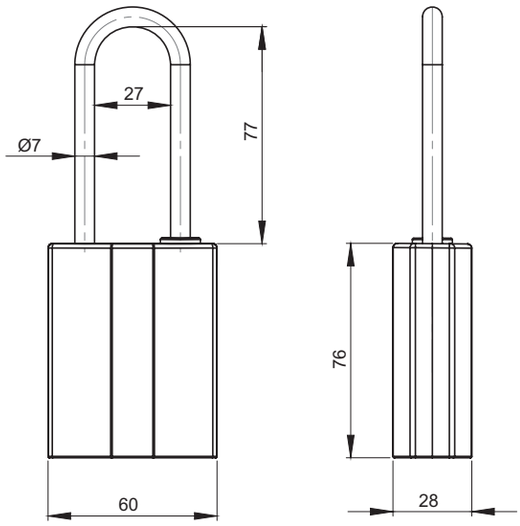

Insert

D13

CATALOGUE NUMBER	COMPONENTS	MATERIAL	FINISH [C]
			RAL9005
4.KDZN.100	Body	ZAMAK	04
	Shackle	Steel zinc plated	-

Paddlock is equiped with a special shaped insert type D13.

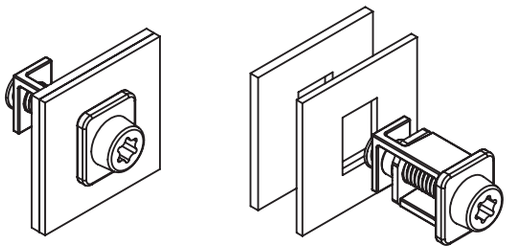

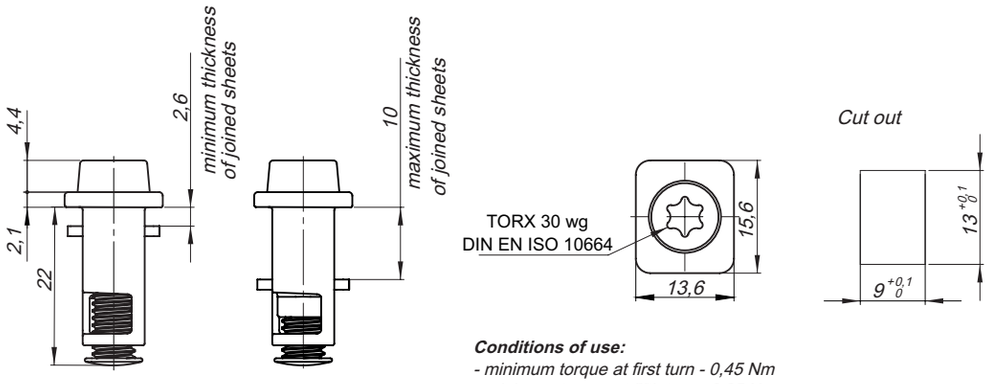

Conditions of use:
- minimum torque at first turn - 0,45 Nm
- minimum torque at fifth turn - 0,35 Nm

CATALOGUE NUMBER	COMPONENTS	MATERIAL
4.600.001	Body	Znal zinc plated
	Screw, Nut	Steel zinc plated

Frame connector 4.422
Profile 4.450

Frame connector **4.422.001**

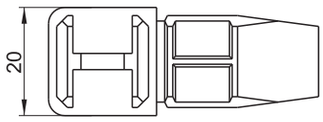

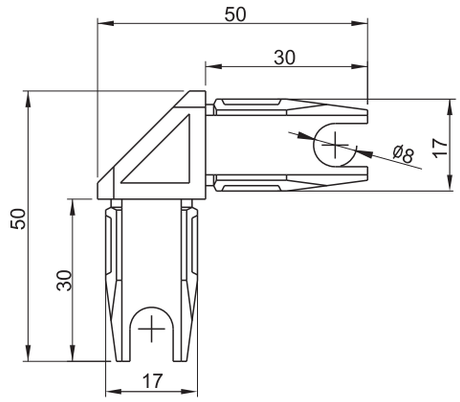

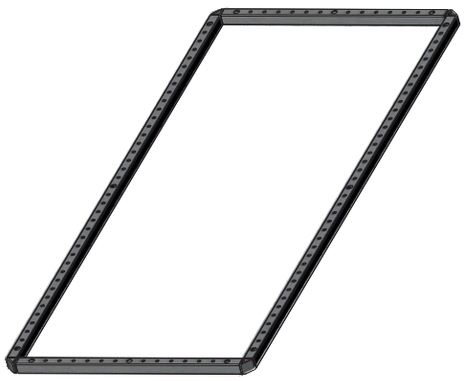

Profile

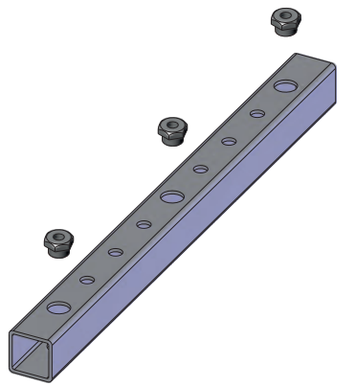

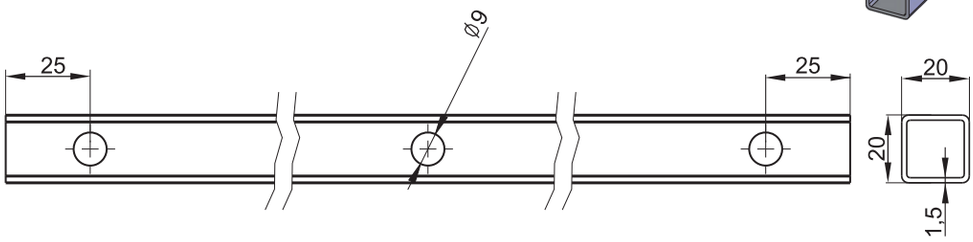

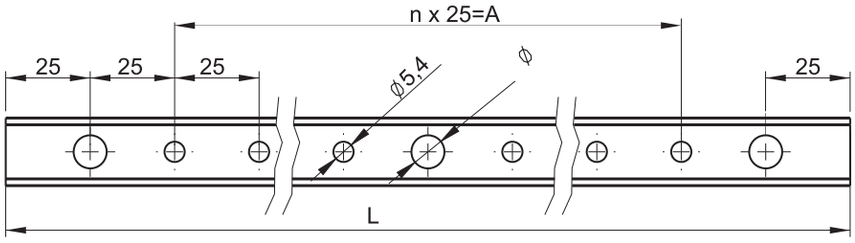

CAT. NUMBER	MATERIAL	NAME	DIMENSION L	nx25=A
4.422.001	Zamak-zinc plated	Frame connector	-	-
4.422.002	Steel zinc plated	Nut M6x	-	-
4.450.01.1850	Steel zinc plated	Profile	1850	70 x 25 = 1750
4.450.01.1650			1650	62 x 25 = 1550
4.450.01.1450			1450	54 x 25 = 1350
4.450.01.1050			1050	38 x 25 = 950
4.450.01.0600			600	20 x 25 = 500
4.450.01.0400			400	12 x 25 = 300

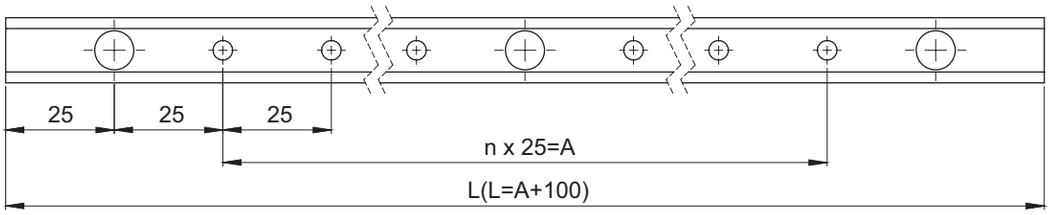

Version 001

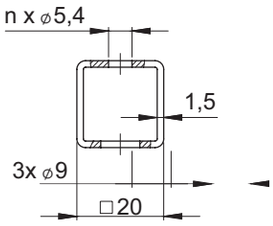

Version 002

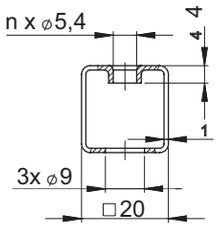

Version 003

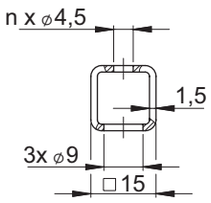

CATALOGUE NO.			DIMENSION L	n x 25 = A	MATERIAL
VERSION					
001	002	003			
-	**4.450.002.1900**	-	1900	72 x 25 = 1850	Steel zinc plated
4.450.001.1850	**4.450.002.1850**	-	1850	70 x 25 = 1750	
4.450.001.1650	**4.450.002.1650**	-	1650	62 x 25 = 1550	
4.450.001.1450	**4.450.002.1450**	-	1450	54 x 25 = 1350	
4.450.001.1050	**4.450.002.1050**	-	1050	38 x 25 = 950	
-	-	**4.450.003.700**	700	24 x 25 = 600	
4.450.001.0600	-	-	600	20 x 25 = 500	
4.450.001.0400	-	-	400	12 x 25 = 300	
-	-	**4.450.003.350**	350	10 x 25 = 250	

Pocket A4 **4.420.001**

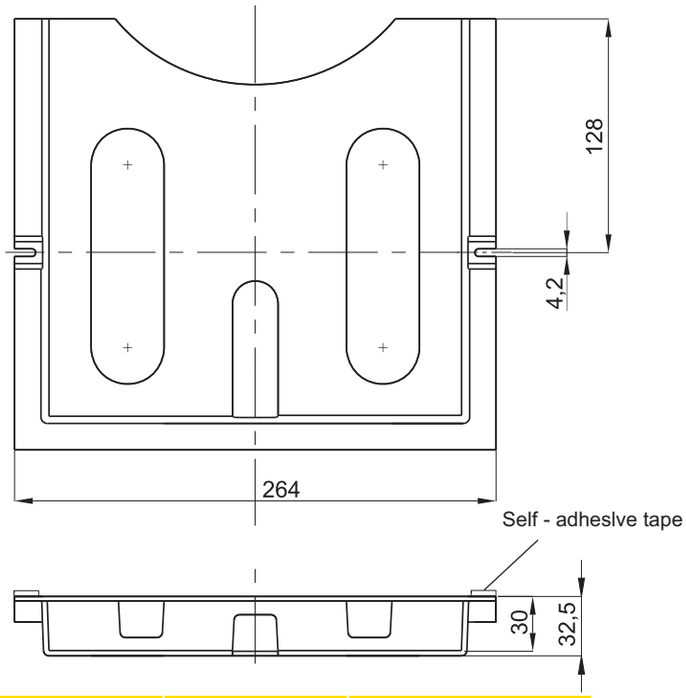

CATALOGUE NUMBER	NAME	MATERIAL	FINISH [C]
			RAL 7035
4.420.001	Document pocket A4	ABS	08

Pocket A6 **4.420.002**

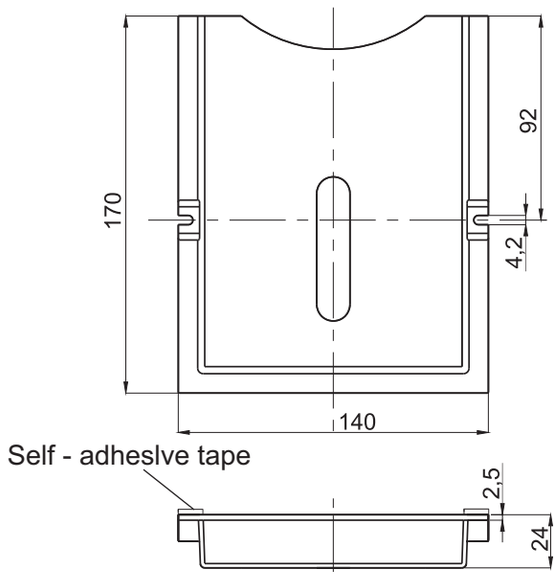

CATALOGUE NUMBER	NAME	MATERIAL	FINISH [C]
			RAL 7035
4.420.002	Document pocket A6	ABS	08

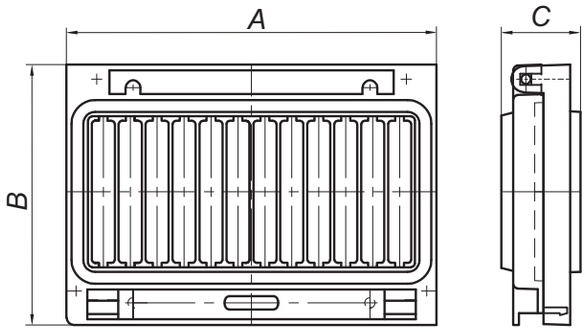

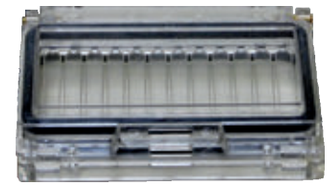

L.p.	A	B	C
4.110	88,5	88	27
4.111	125	88	27
4.112	161,5	88	27
4.113	234	88	27
4.114	254	210	27

WINDOW **117 x 117**

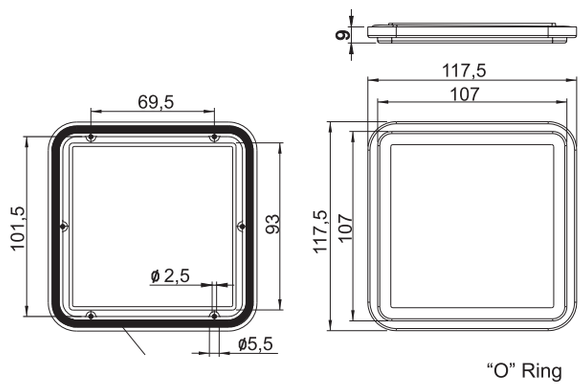

CAT. NUMBER	NAME	MATERIAL
4.423.001	Window 117 x 117	Polycarbonate

WINDOW **151 x 190**

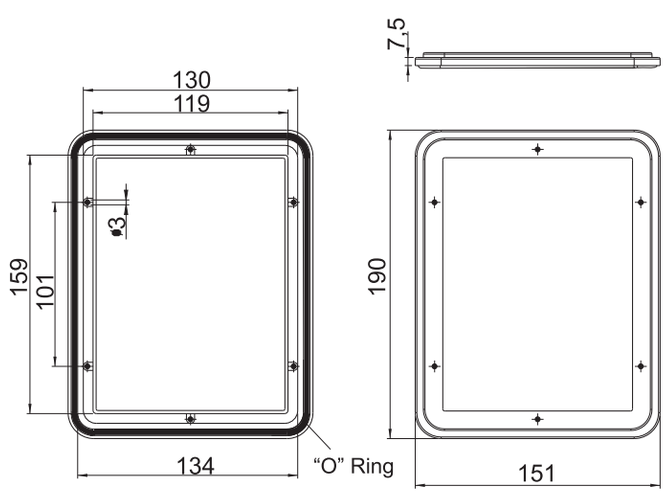

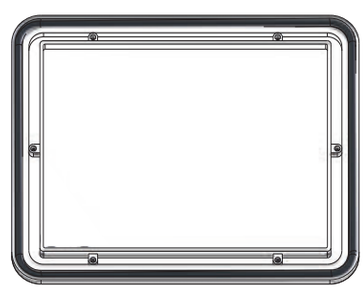

CAT. NUMBER	NAME	MATERIAL
4.423.002	Window 151 x 190	Polycarbonate

Inspection window 4.423

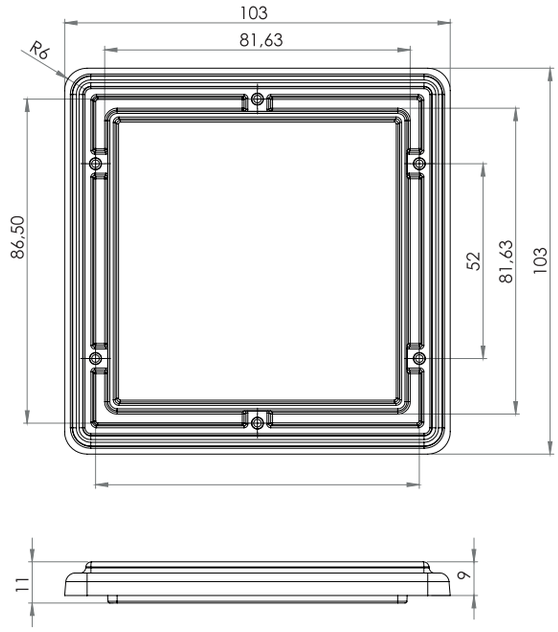

CAT. NUMBER	COLOUR	MATERIAL
4.423.003	Transparent	Polycarbonate

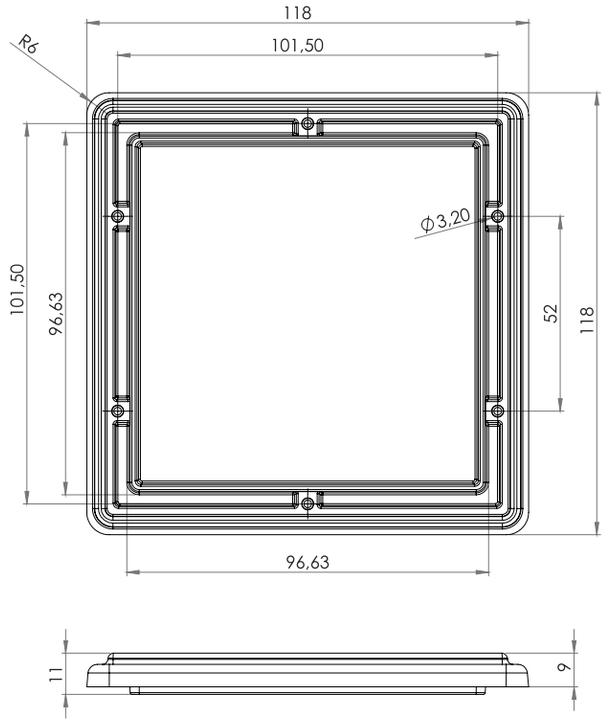

CAT. NUMBER	COLOUR	MATERIAL
4.423.004	Transparent	Polycarbonate

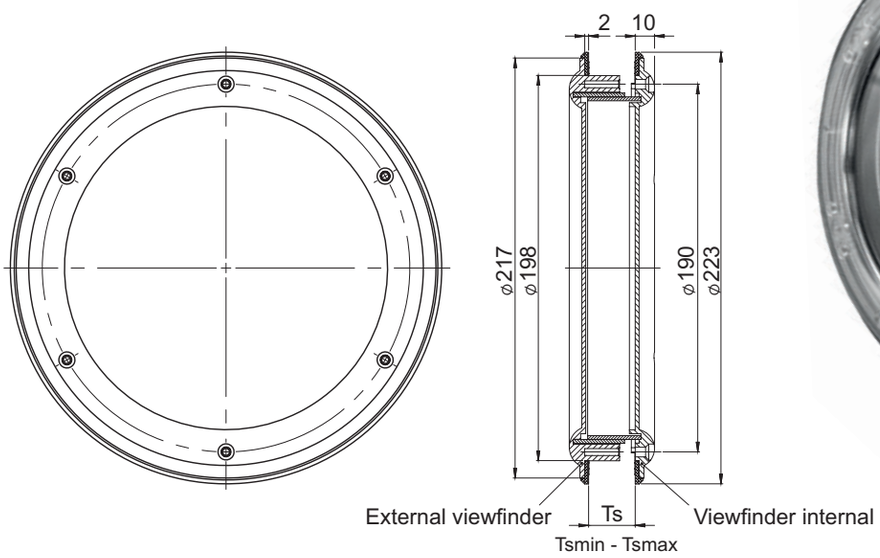

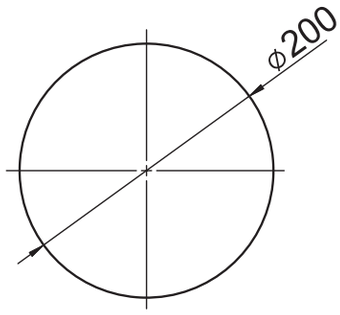

cut out

CATALOGUE NO.	DIMENSION Ts	DETAL	COMPONENTS	MATERIAL
4.425.001	19 - 35	Inspection window	Viewfinder	Polycarbonate
4.425.002	39 - 53			
4.425.003	54 - 65		Gasket	EPDM
4.425.004	70 - 90			
4.425.005	95 - 110		Adjusting ring	Poliamid

Tsmin - **Ts**max - the range of thickness adjustment of inspection window

Air vent 4.107, 4.108, 4.109

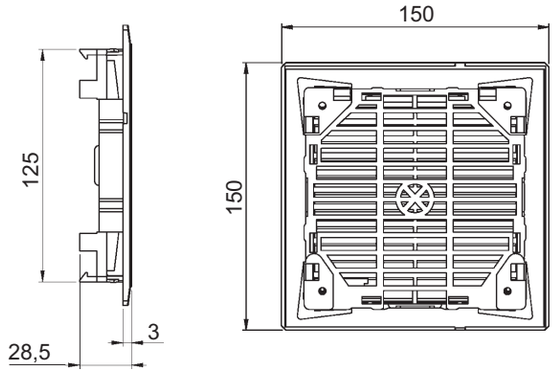

CAT. NUMBER	MATERIAL	FINISH [C]	
		RAL 9005	RAL 7035
4.107.001	ABS	07	08

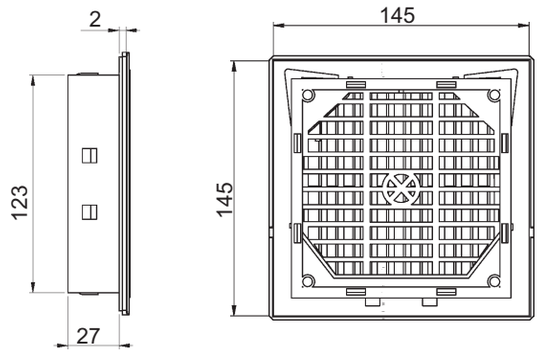

CAT. NUMBER	MATERIAL	FINISH [C]	
		RAL 9005	RAL 7035
4.108.001	ABS	07	08

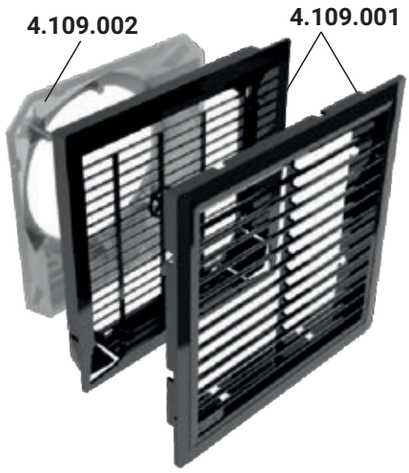

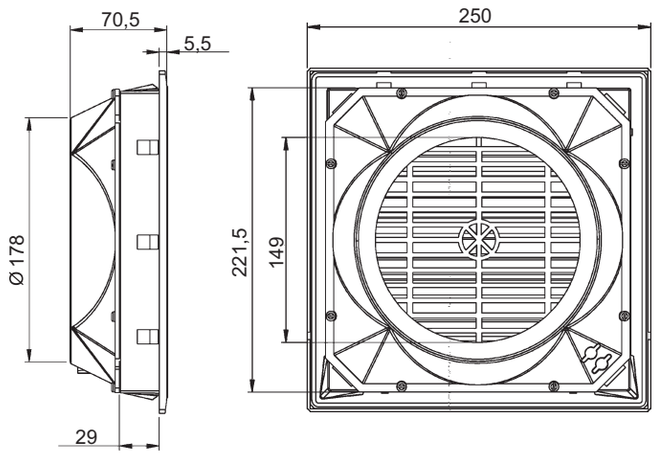

CAT. NUMBER	MATERIAL	FINISH [C]	
		RAL 9005	RAL 7035
4.109.001	ABS	07	08
4.109.002	ABS		

How to order:

4.107.001 — C

Catalogue number

Finish

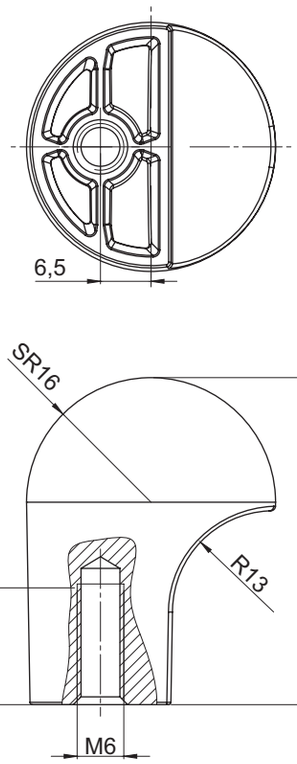

CATALOGUE NO.	DETAL	MATERIAL	FINISH [C]	
4.250.001	Handle	ZAMAK 5	Chrome	01
			Brass	12
			No coating	0

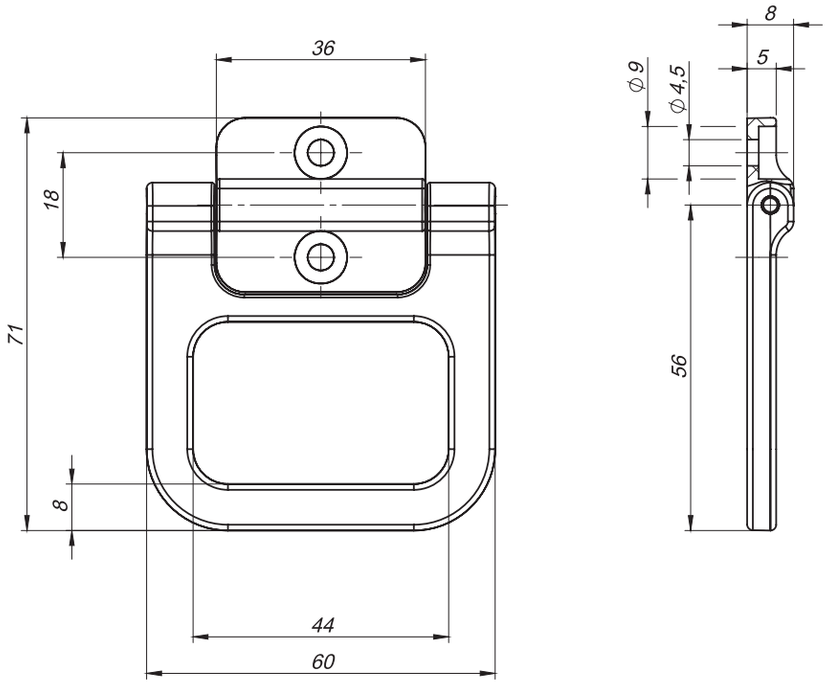

NEW

CATALOGUE NO.	COMPONENTS	MATERIAL	FINISH [C]
			RAL 9005
4.444.005	Holder, Base	Polyamide	07
	Pin	Steel zinc plated	-

Handle 4.440, 4.441

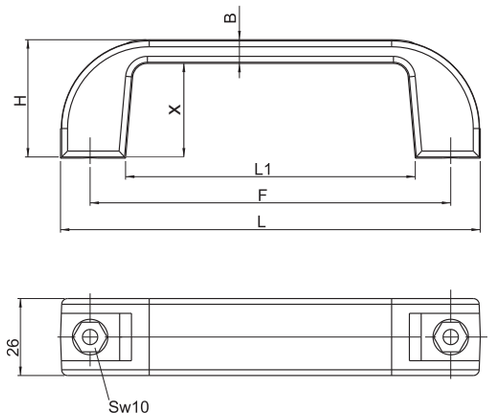

CAT. NUMBER	DIMENSION						MATERIAL	FINISH [C]
	L	F	L1	H	B	X		RAL 9005
4.440.001	107	93,5	74	36	5,50	33	Polyamide GF30	07
4.440.002	134	114	88,5	45	10,50	34		
4.440.003	144	122	94	42	12	30		
4.440.004	150	131	108	45	7	38		
4.440.005	170	150	118	54	7	42		

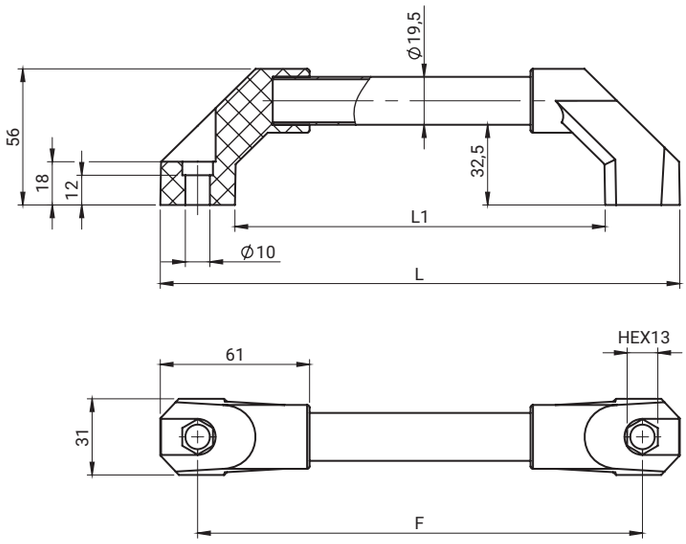

CAT. NUMBER	DIMENSION			MATERIAL	HOLDER FINISH [C]
	F	L	L1		RAL 9005
4.441.001	200	224	154	Holder Polyamide Handle Aluminum	07
4.441.002	300	324	254		
4.441.003	400	424	354		
4.441.004	500	524	454		

Handle PA **4.444.001**

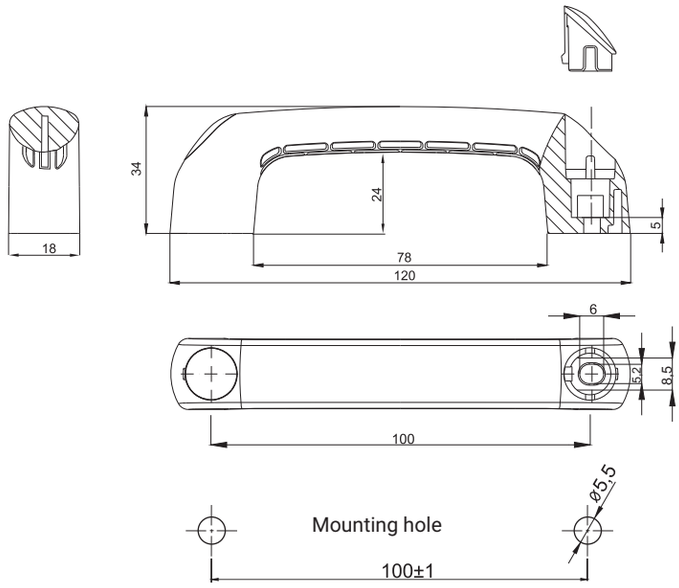

PLUG COLORS	
01	black
02	blue
03	red
04	green
05	yellow
06	grey

CAT. NUMBER	MATERIAL	LOAD CAPACITY
4.444.001...	Polyamide PA6 GF30 RAL 9005	54 kg

Note: handle colors on request

Handle PA **4.444.002**

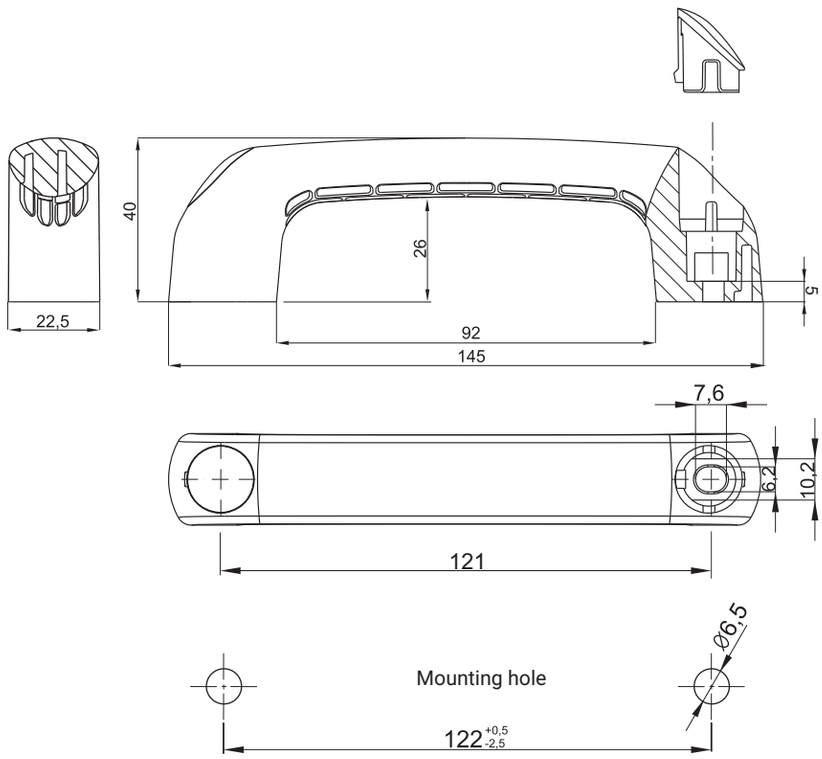

PLUG COLORS [C]	
01	black
02	blue
03	red
04	green
05	yellow
06	grey

Construction design allows to mount the handle into the holes with a spacing of 120mm

CAT. NUMBER	MATERIAL	LOAD CAPACITY
4.444.002...	Polyamide PA6 GF30 RAL 9005	54 kg

Note: handle colors on request

How to order:

4.444.001 — C

Catalogue number

Plug color

Mounting screws

	4.444.001 M5	4.444.002 M6
	DIN 933	
	DIN 7984	
	DIN 965	
	DIN 84	

Handle 4.447, 4.448

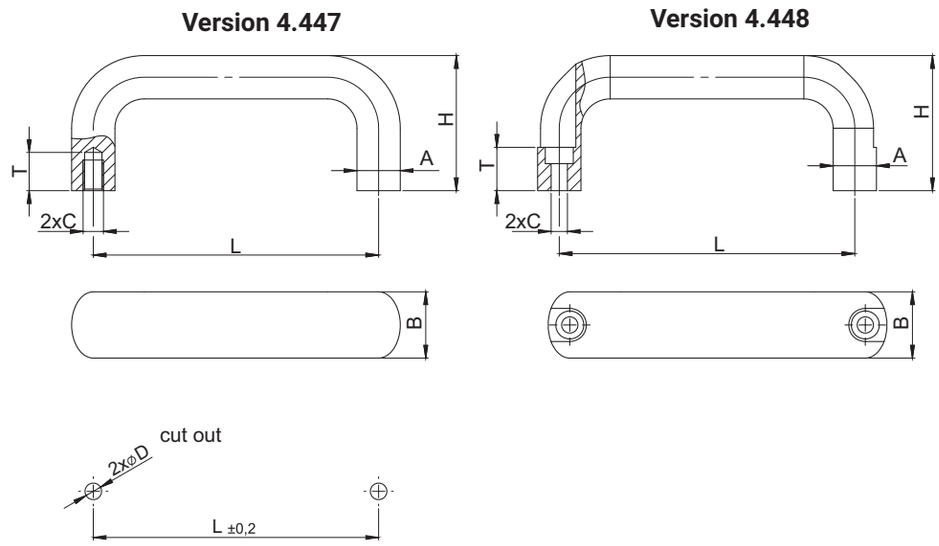

CATALOGUE NO.	DIMENSIONS							MATERIAL	FINISH
	L	H	A	B	T	C	D		
VERSION 4.447									
4.447.001	100	47	13	20	10	M6	6,6	Aluminum	Natural
4.447.002	112	49							
4.447.003	128	51							
4.447.004	160	51							
4.447.005	112	53	17	26	12	M8	9		
4.447.006	128	55							
4.447.007	160	57							
4.447.008	192	57							
4.447.009	300	57							
4.447.010	400	57							
4.447.101	100	47	13	20	10	M6	6,6		black plastic coating
4.447.102	112	49							
4.447.103	128	51							
4.447.104	160	51	17	26	12	M8	9		
4.447.105	112	53							
4.447.106	128	55							
4.447.107	160	57							
4.447.108	192	57							
4.447.109	300	57							
4.447.110	400	57							
4.447.301	100	50	13	20	10	M6	6,6		anodising
4.447.302	112								
4.447.303	112	55	17	26	12	M8	9		
4.447.304	128	50	13	20	10	M6	6,6		
4.447.305	128	55	17	26	12	M8	9		
4.447.306	160	50	13	20	10	M6	6,6		
4.447.307	160	55	17	26	12	M8	9		
4.447.308	192								
4.447.309	300								
4.447.310	400								
4.447.002 SN	112	49	13	20	10	M6	6,6	Stainless steel	Natural
4.447.003 SN	128	51							
VERSION 4.448									
4.448.001	116	53	17	26	17	⌀6,4	6,6	Aluminum	Natural
4.448.002	132	55							
4.448.003	164	57							
4.448.004	196	57							
4.448.101	116	53							black plastic coating
4.448.102	132	55							
4.448.103	164	57							
4.448.104	196	57							

Handle 4.446

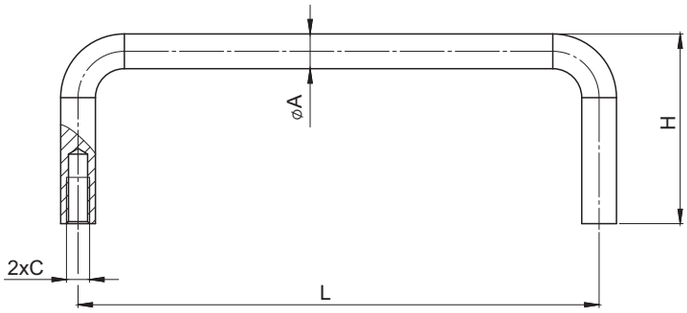

cut out

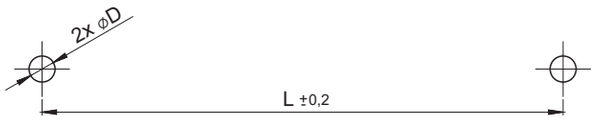

CATALOGUE NO.		DIMENSIONS				
Chrome plated steel	Stainless steel	L	A	H	C	D
4.446.001	4.446.001SN	70	6	32	M4	4,5
4.446.002	4.446.002SN	90	6	32	M4	4,5
4.446.003	4.446.003SN	102	6	32	M4	4,5
4.446.004	4.446.004SN	122	6	32	M4	4,5
4.446.005	4.446.005SN	138	6	32	M4	4,5
4.446.006	4.446.006SN	75	8	40	M5	6
4.446.007	4.446.007SN	100	8	32	M5	6
4.446.008	4.446.008SN	150	8	40	M5	6
4.446.009	4.446.009SN	90	9	32	M5	6
4.446.010	4.446.010SN	119	9	40	M5	6
4.446.011	4.446.011SN	135	9	32	M5	6
4.446.012	4.446.012SN	149	9	40	M5	6
4.446.013	4.446.013SN	155	9	32	M5	6
4.446.014	4.446.014SN	160	9	40	M5	6

Handle 4.444

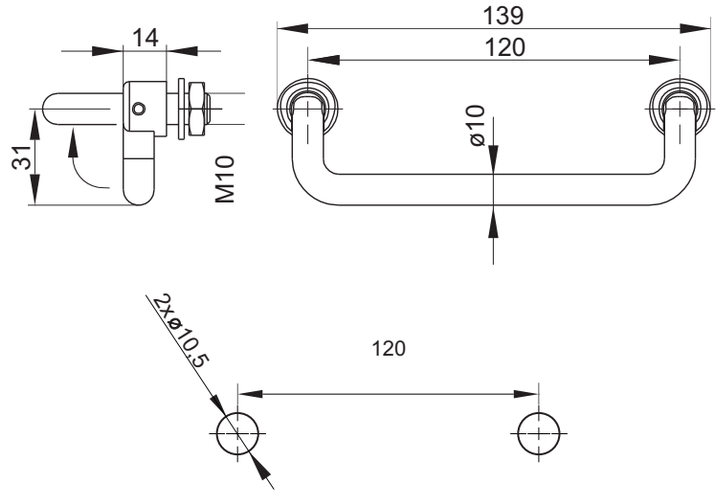

Mounting hole

CAT. NUMBER	COMPONENTS	MATERIAL
4.444.003	Holder, Base	Stainless steel

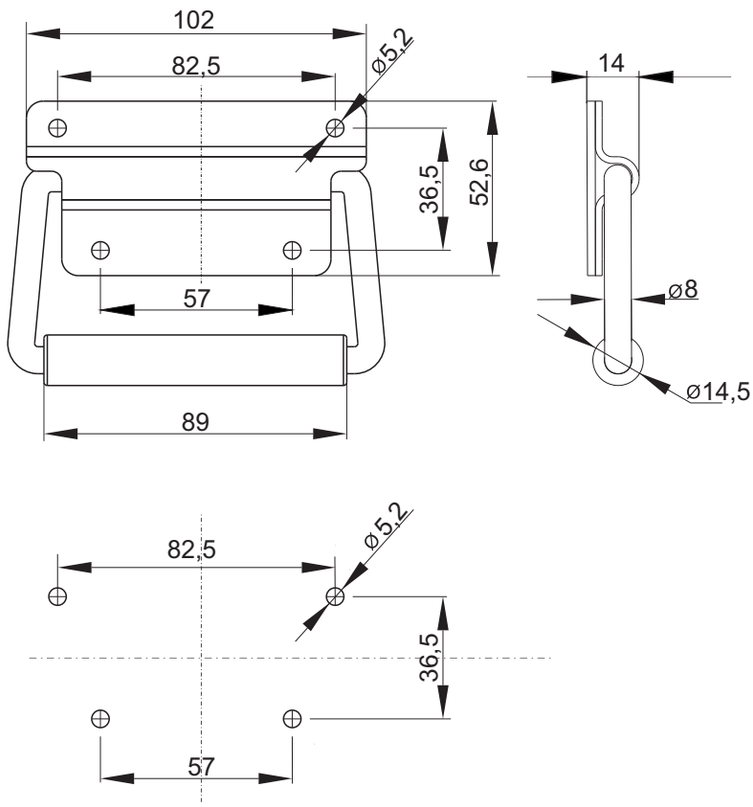

Mounting hole

CAT. NUMBER	COMPONENTS	MATERIAL
4.444.004	Holder, Base, Spring	Steel zinc plated

Metal handle **4.442**

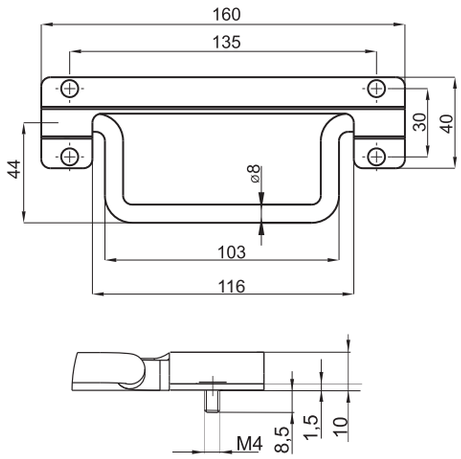

CAT. NUMBER	COMPONENTS	MATERIAL
4.442.001	Holder, Base	Stainless steel
4.442.003	Holder, Base	Steel zinc plated

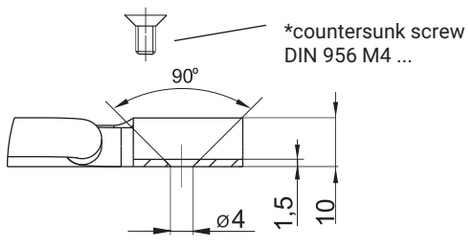

* - not included in the handle

CAT. NUMBER	COMPONENTS	MATERIAL
4.442.002	Holder, Base	Stainless steel
4.442.004	Holder, Base	Steel zinc plated

Drawer handle **4.443**

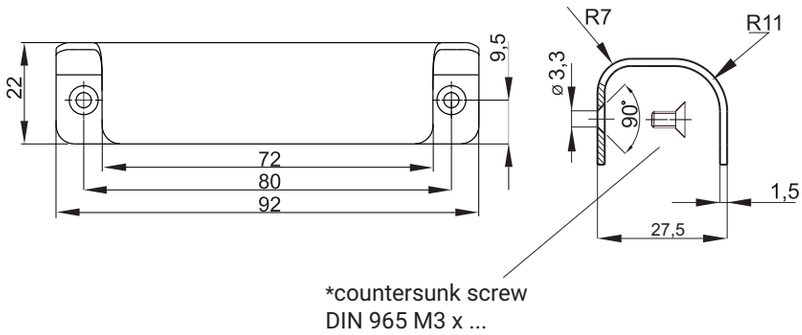

* - not included in the handle

CAT. NUMBER	COMPONENTS	MATERIAL	FINISH [C]	
			RAL 9005	RAL 7035
4.443.001	Holder	Steel zinc plated	04	05
4.443.002	Holder	Stainless steel	-	-

How to order: 4.443.001 — C

Catalogue number

Finish

Handle 4.102, 4.470

Mounting holes

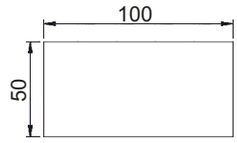

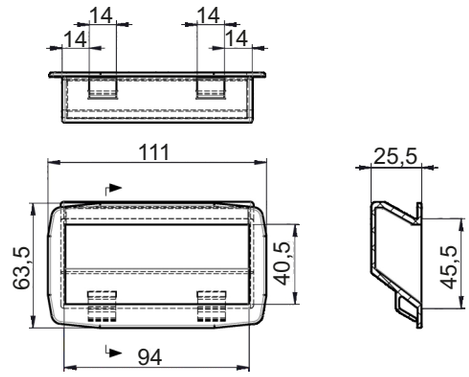

Thickness of metal sheet Ts

CAT. NUMBER	Ts	MATERIAL	FINISH [C]
			RAL 9005
4.102.001	1,2 - 1,6	Polyamide PA6	07
4.102.003	0,8 - 1,2	Polyamide PA6	07

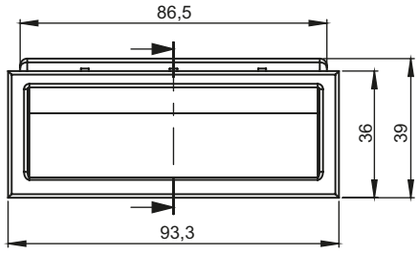

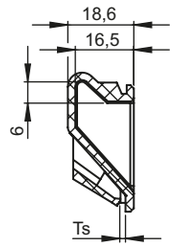

Mounting holes

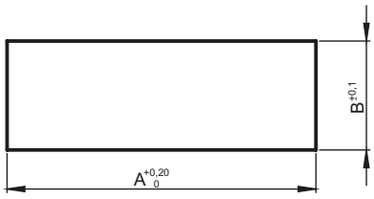

Ts	A	B
1,2 - 1,6	87	30,7
1,75 - 2,2	87	31,5

Ts - Thickness of metal sheet

CAT. NUMBER	MATERIAL	FINISH [C]
		RAL 9005
4.102.002	ABS	07

Mounting holes

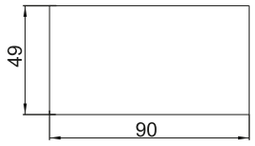

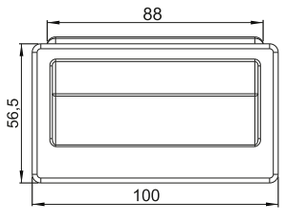

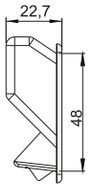

Thickness of metal sheet Ts= 1,0 - 2,5mm

CAT. NUMBER	MATERIAL	FINISH [C]
		RAL 9005
4.470.001	Polyamide PA6	07

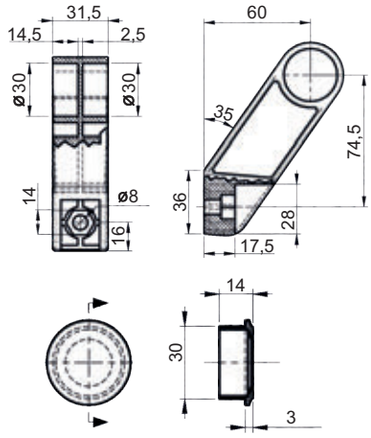

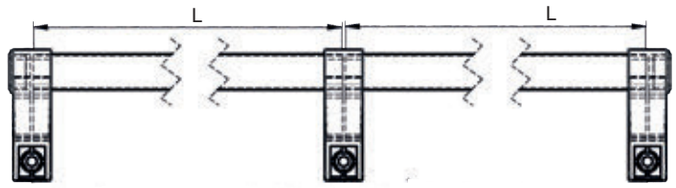

CAT. NUMBER	COMPONENTS	MATERIAL	FINISH [C]
			RAL 9005
4.103	Handle	Polyamide PA6	07
	Bar	Aluminum	-

HOLDER 4.103	L=200	L=300	L=400	L=500
PA	4.103.01	4.103.02	4.103.03	4.103.04
Aluminum	4.103.05	4.103.06	4.103.07	4.103.08

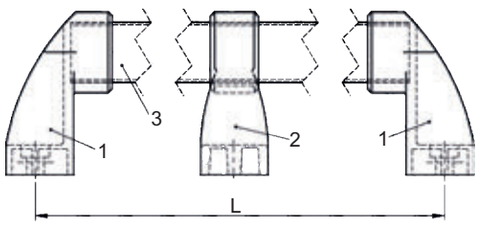

CAT. NUMBER	COMPONENTS		MATERIAL	
4.104	Handle		Aluminium	
HOLDER 4.104	L=200	L=300	L=400	L=500
	4.104.001.01	4.104.001.02	4.104.001.03	4.104.001.04

4.104.001

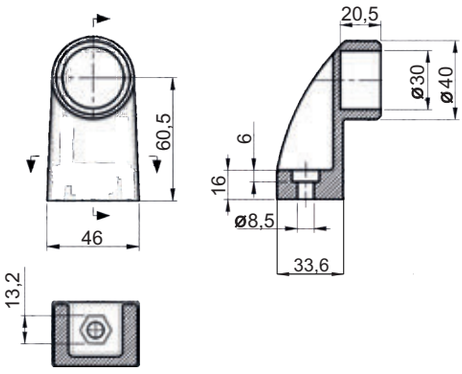

4.104.002

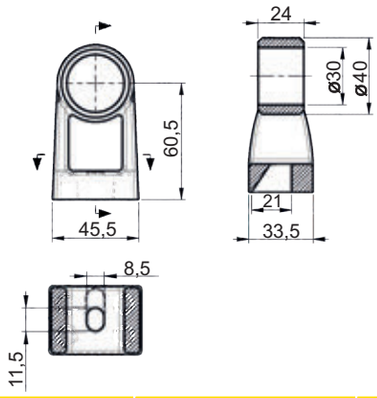

4.104.002

4.104.001

CAT. NUMBER	COMPONENTS	MATERIAL	FINISH [C]
			RAL 9005
4.104.001	Outside portion	Polyamide PA6	07
4.104.002	Middle portion	Polyamide PA6	

Lock with decompression function 4.110

NEW

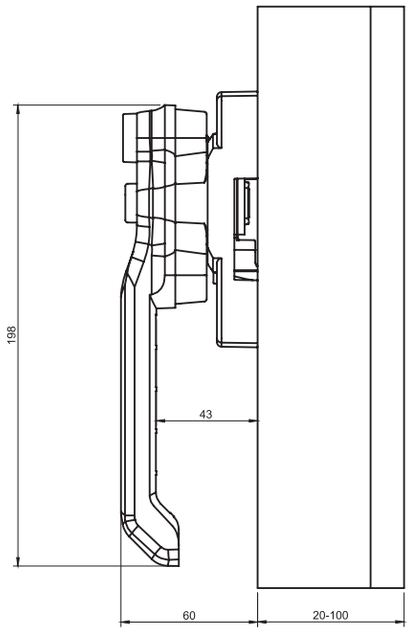

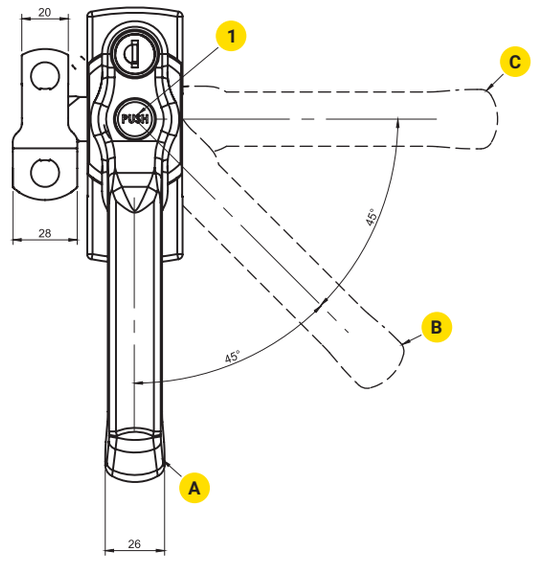

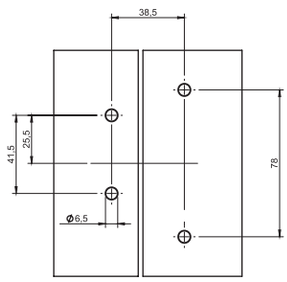

Spacing of holes

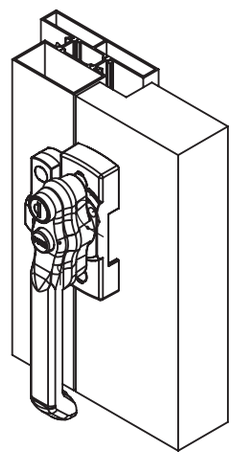

- **A** Locked position
- **B** Decompression - lock is closed, but pressure is removed
- **C** Open position - press button 1 to open

Specification::

1. Locks 4.110.001 and 4.110.002 with a leakage function - protection of the cabinet user against uncontrolled opening of the door due to overpressure in the climate control panel. It allows for pressure compensation before opening the door. Locks 4.110.003 and 4.110.004 (without a button) do not have a leakage function before opening the lock..
2. Resistance of the lock to pressure of 5000 N/mm2.
3. The lock can be mounted on doors with a thickness of 20-100 mm.

CATALOGUE NO.	VERSION		COMPONENTS	MATERIALS
4.110.001	lockable*	with push button	Handle	PA6GF30
4.110.002	not lockable	with push button	Base	ZAMAK
4.110.003	lockable*	without push button	Catch	ZAMAK
4.110.004	not lockable	without push button	Cam	Steel

* - possibility to use different key codes

Heavy duty handle 4.105

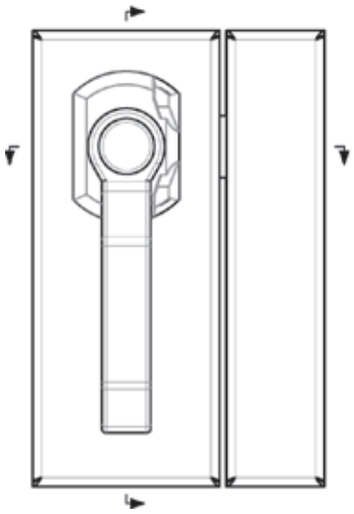

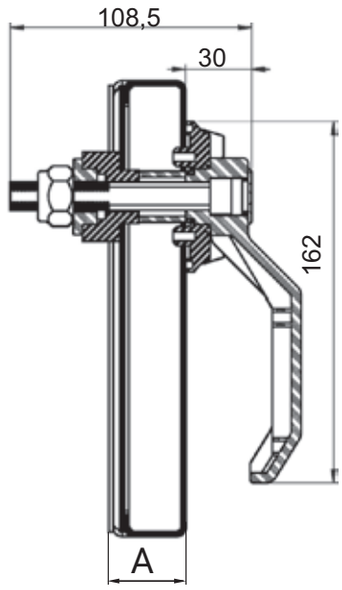

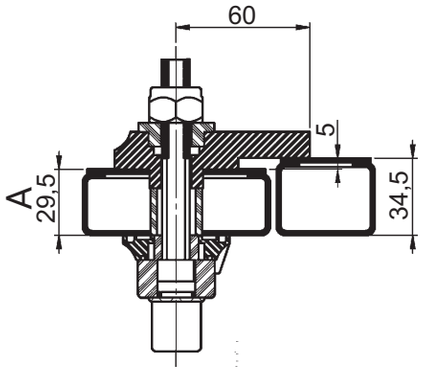

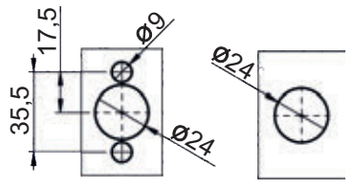

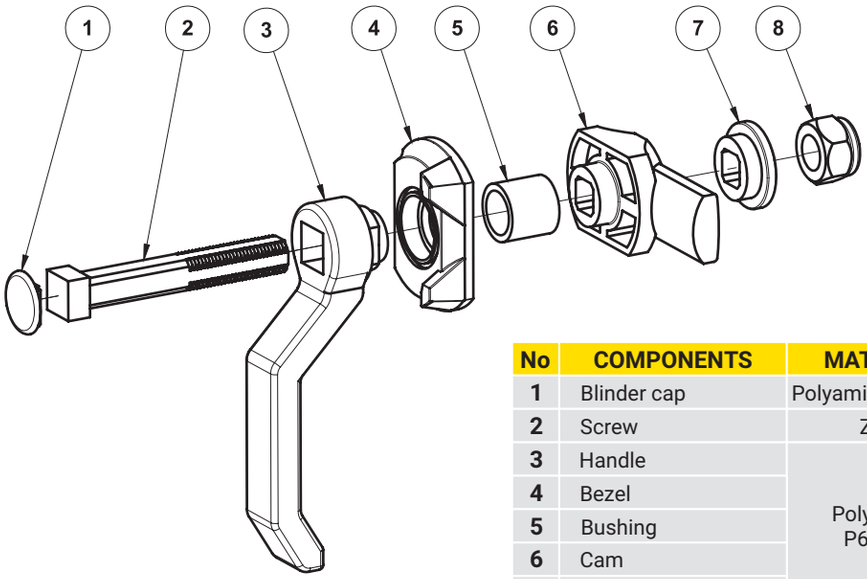

No	COMPONENTS	MATERIAL
1	Blinder cap	Polyamide P6GF30
2	Screw	ZnAl
3	Handle	Polyamide P6GF30
4	Bezel	
5	Bushing	
6	Cam	
7	Washer	
8	Nut	Steel zinc plated

A Thickness door	180° Sign	90° turn **Right**	90° turn **Left**	FINISH [C] RAL 9005
30 mm	4.105.001	4.105.004	4.105.007	07
50 mm	4.105.002	4.105.005	4.105.008	
70 mm	4.105.003	4.105.006	4.105.009	

Left and right version on request. Delivery time 4-6 weeks.

Heavy duty handle 4.105

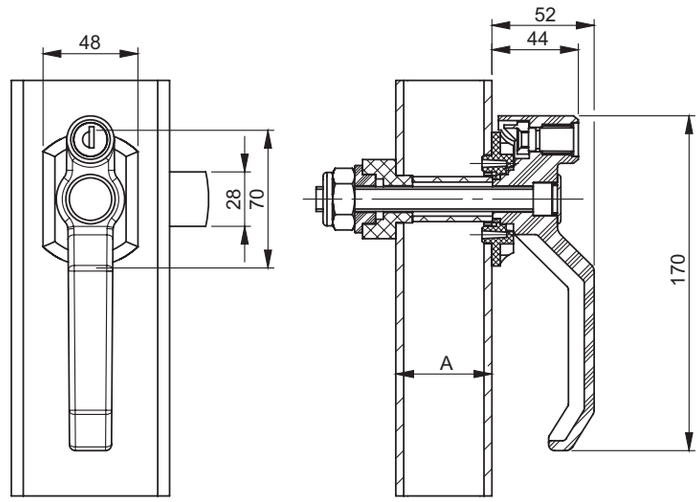

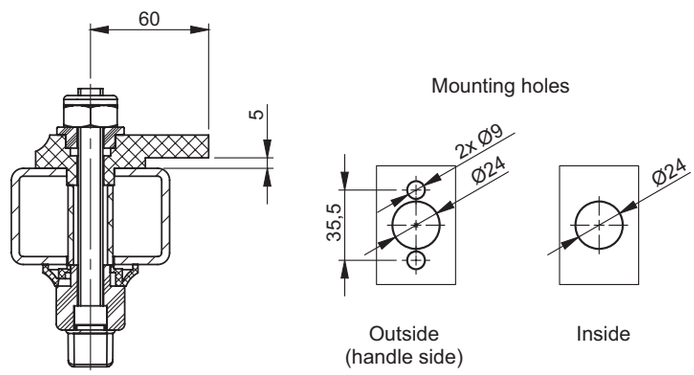

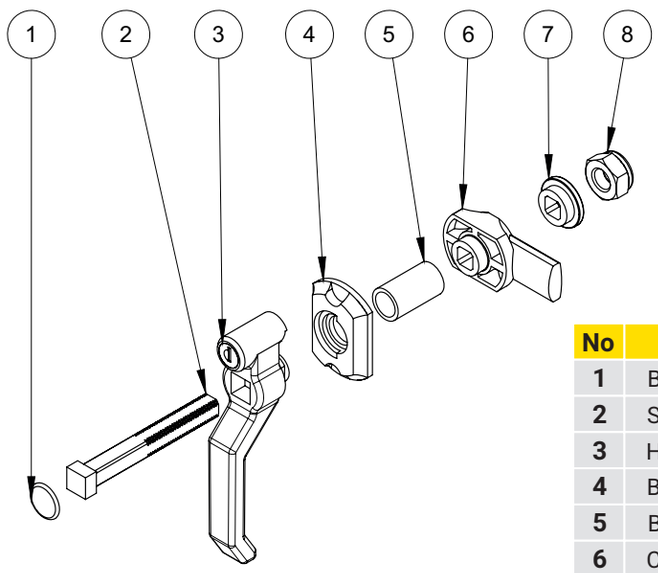

No	COMPONENTS	MATERIAL
1	Blinder cap	Polyamide P6GF30
2	Screw	ZnAl
3	Handle	Polyamide P6GF30
4	Bezel	
5	Bushing	
6	Cam	
7	Washer	
8	Nut	Steel zinc plated

CATALOGUE NUMBER	MAX. DOOR THICKNESS A [mm]	FINISH [C]
		RAL 9005
4.105.101	30	07
4.105.102	50	
4.105.103	70	

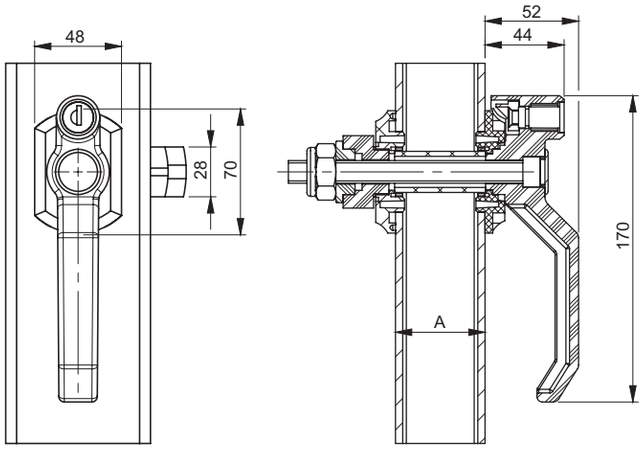

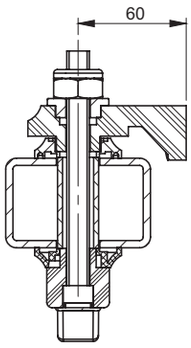

Mounting holes

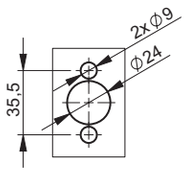

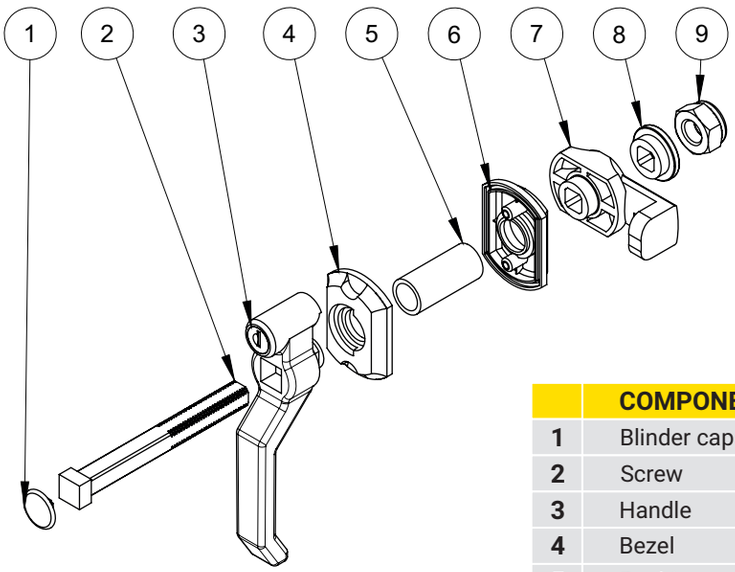

	COMPONENTS	MATERIAL
1	Blinder cap	Polyamide P6GF30
2	Screw	ZnAl
3	Handle	Polyamide P6GF30
4	Bezel	
5	Bushing	
6	Cam	
7	Washer	
8	Nut	Steel zinc plated

CATALOGUE NUMBER	MAX. DOOR THICKNESS A [mm]	FINISH [C]
		RAL 9005
4.106.101	25	07
4.106.102	40	
4.106.103	50	

Heavy duty handle 4.106

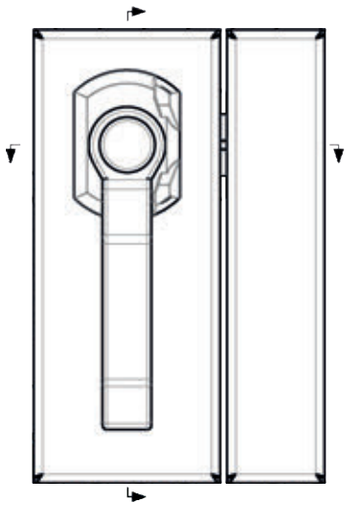

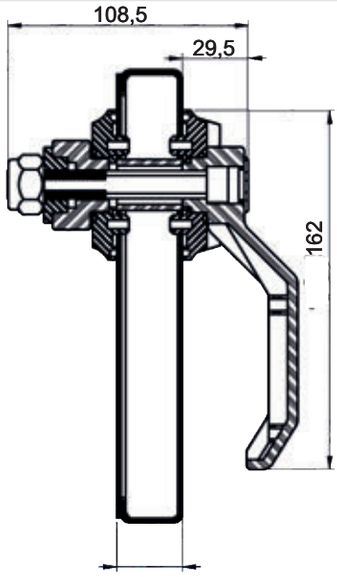

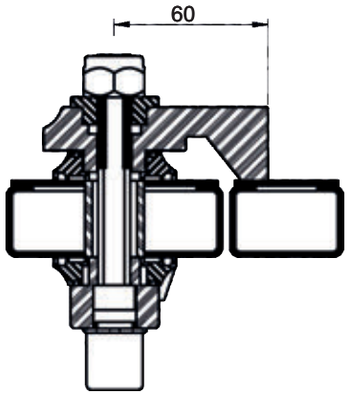

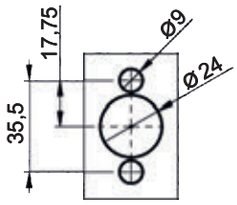

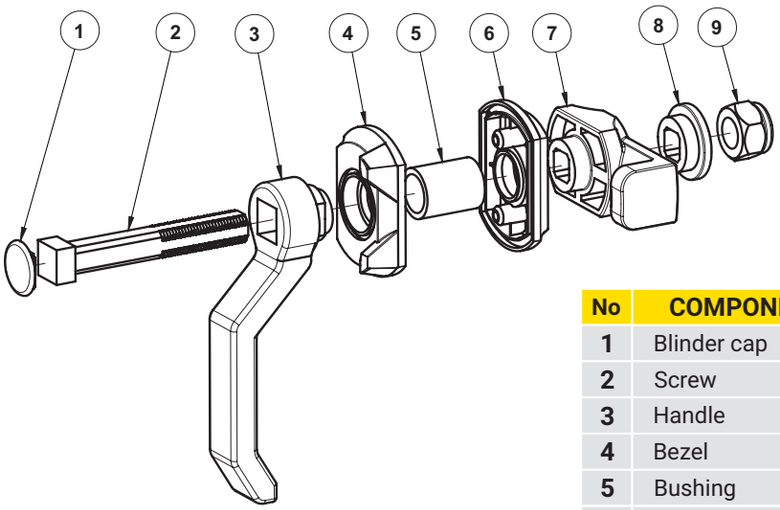

No	COMPONENTS	MATERIAL
1	Blinder cap	Polyamide P6GF30
2	Screw	Steel zinc plated
3	Handle	Polyamide P6GF30
4	Bezel	
5	Bushing	
6	Bezel	
7	Cam	
8	Washer	
9	Nut	Steel zinc plated

A Thickness door	180° Sign	90° turn Right	90° turn Left	FINISH [C] RAL 9005
25 mm	4.106.001	4.106.004	4.106.007	07
40 mm	4.106.002	4.106.005	4.106.008	
50 mm	4.106.003	4.106.006	4.106.009	

Left and right version on request. Delivery time 4-6 weeks.

Latching element

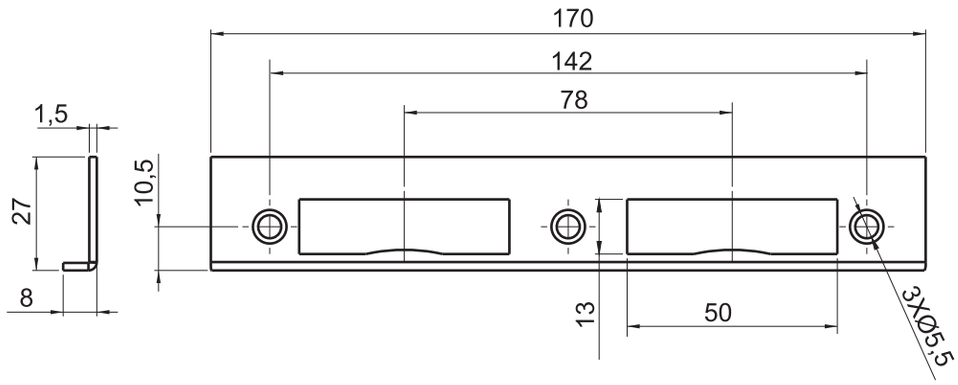

CAT. NUMBER	MATERIAL
4.471.001	Steel zinc plated

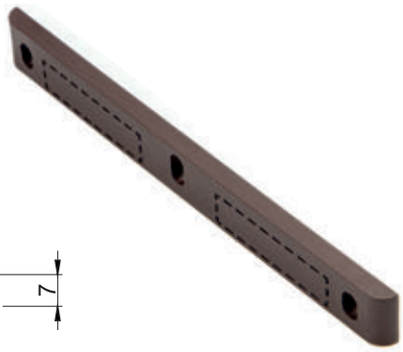

Masking element

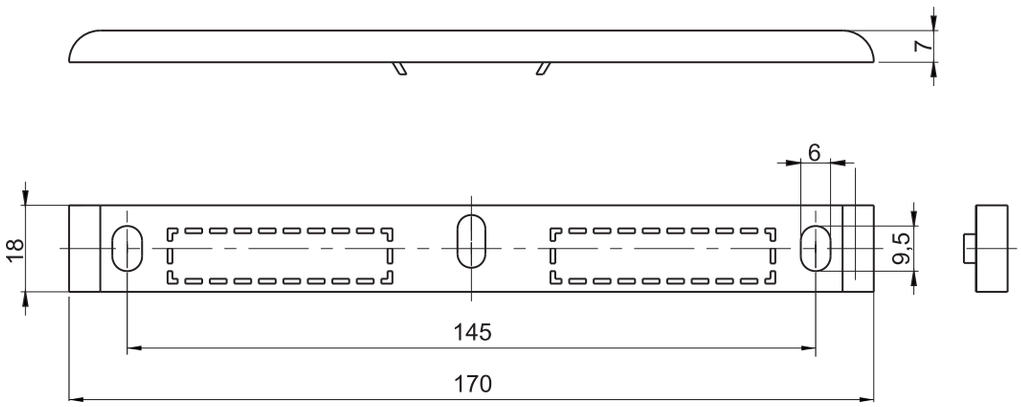

CAT. NUMBER	MATERIAL
4.472.001	Polipropylen - PP color - brown

Fixing pivot 4.427, Clamp 4.426

Fixing pivot **4.427.001, 4.427.002**

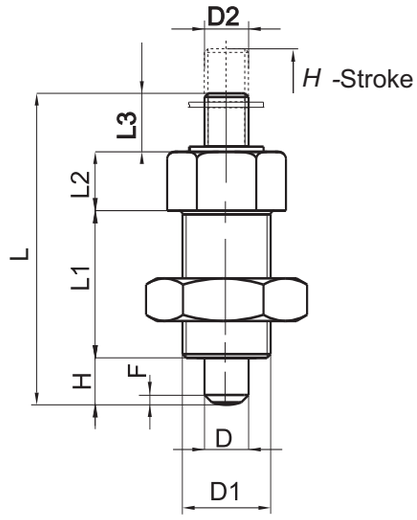

	D1	D2	D	L	L1	L2	L3	H	F
4.427.001	M12 x 1,5	M6	ø6	42	20	8	8	6	1 x 45°
4.427.002	M10 x 1	M4	ø5	37	17	7	7	5,6	0,7 x 45°

CAT. NUMBER	COMPONENTS	MATERIAL
4.427.001 **4.427.002**	Nut	Steel - oxidized
	Housing	
	Pin	
	Cir clip	

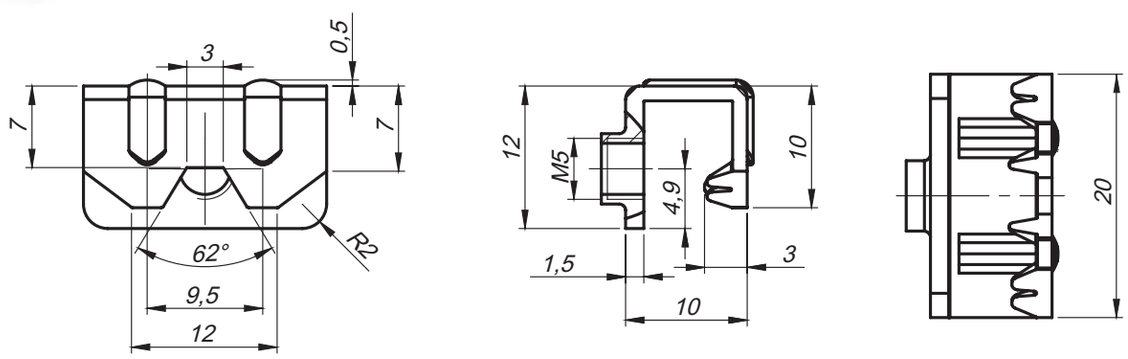

Complete clamp has a screw M5x8

CAT. NUMBER	MATERIAL
4.426.001	Steel zinc plated

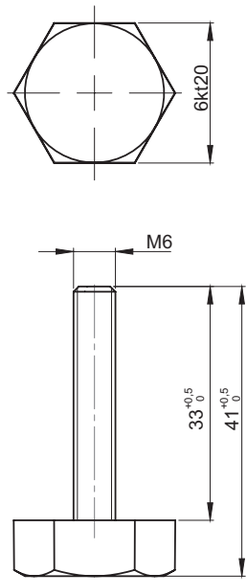

CAT. NUMBER	COMPONENTS	MATERIAL	FINISH [C]
			RAL 9005
4.404.001	Knob	Polyamide PA6	07
	Screw	Steel zinc plated	

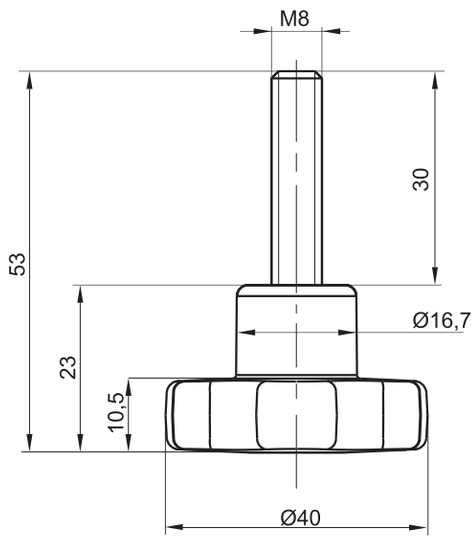

CAT. NUMBER	COMPONENTS	MATERIAL	FINISH [C]
			RAL 9005
4.428.001	Handle	Polyamide PA6 GF30	07
	Screw	Steel - oxidizing	

Masking plate bracket 4.412, Holder 4.413

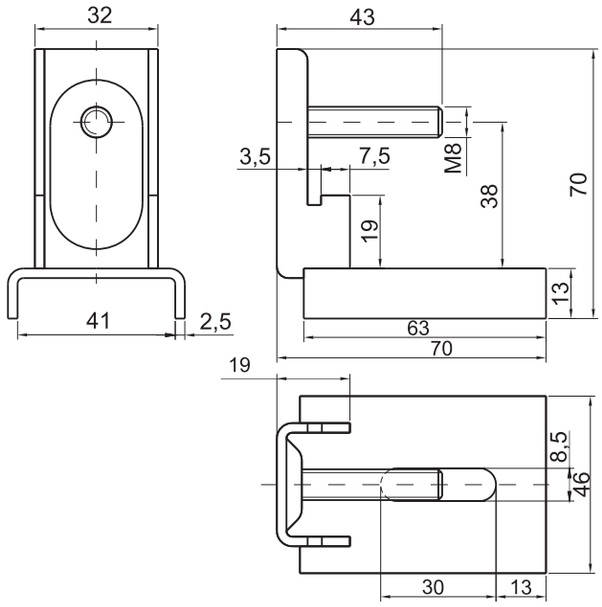

CAT. NUMBER	NAME	MATERIAL
4.412.001	Masking plate bracket	Steel zinc plated

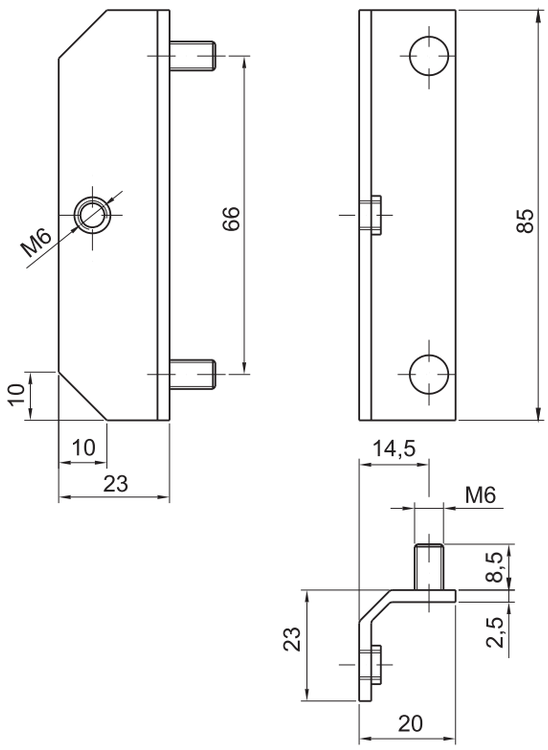

CAT. NUMBER	NAME	MATERIAL
4.413.001	Holder	Steel zinc plated

Gasketing profiles

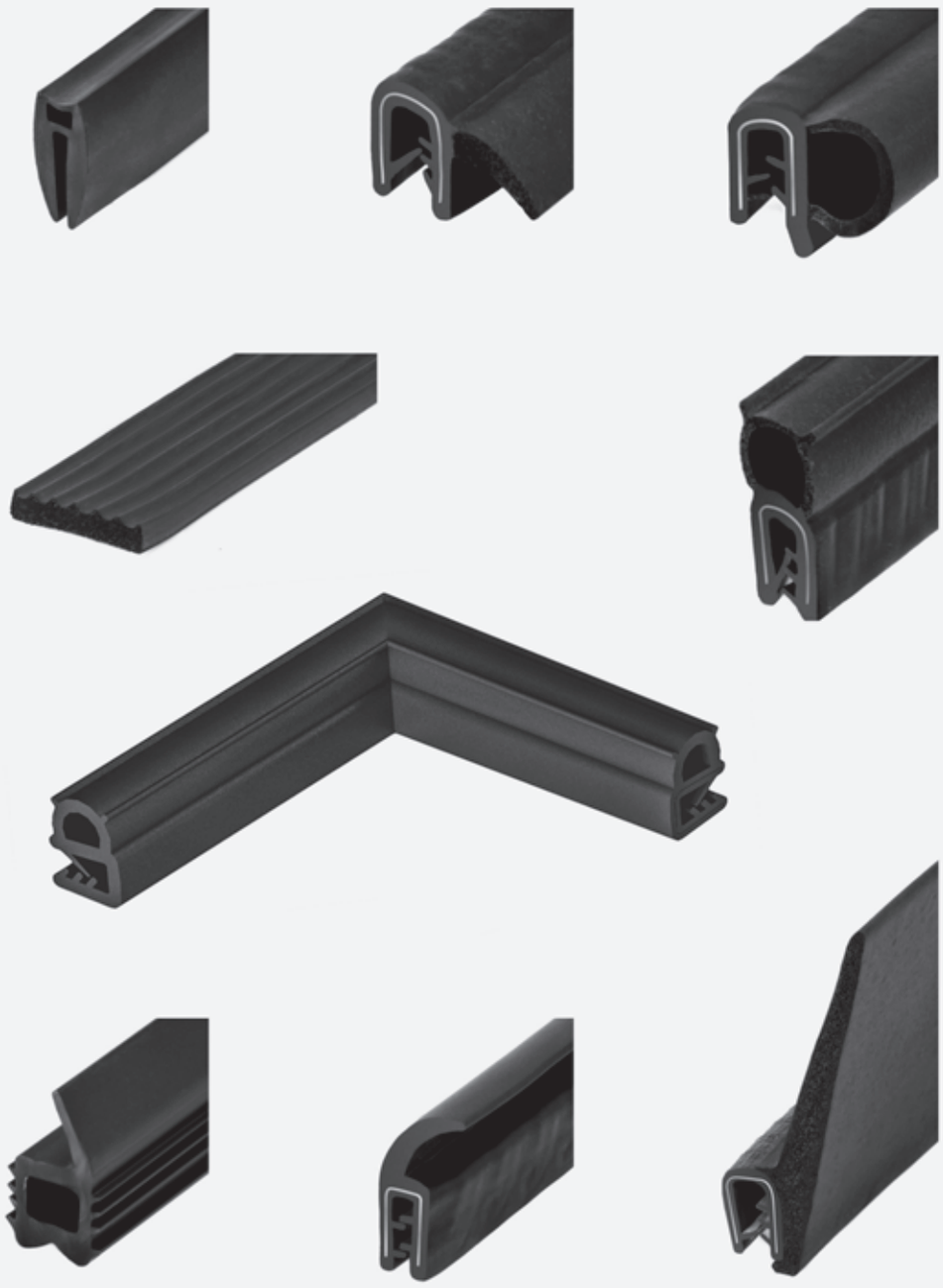

	Design (section of gasket)	Code	Clamping range [mm]	Colour	Material	Sales unit [m]
	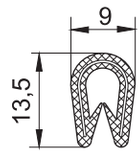	**UT-4**	1,0-4,0	C	PCV	100
	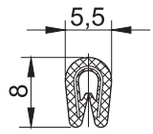	**UT-4.2**	1,0-1,5	C	PCV	100
	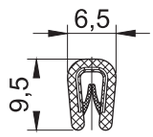	**UT-4.3.01**	1,0-2,0	C	PCV	100
		UT-4.3.02	1,0-2,0	B	PCV	100
		UT-4.3.06	1,0-2,0	S	PCV	100
	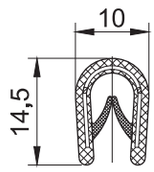	**UT-4.4.01**	1,0-4,0	C	PCV	100
		UT-4.4.02	1,0-4,0	B	PCV	100
		UT-4.4.04	1,0-4,0	SC	PCV	100
		UT-4.4.05	1,0-4,0	SJ	PCV	100
	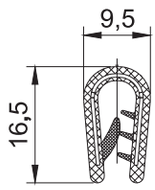	**UT-4.5.2**	1,0-2,5	C	PCV	100
		UT-4.5.4	2,0-4,0	C	PCV	100
		UT-4.5.6	4,0-6,0	C	PCV	100
	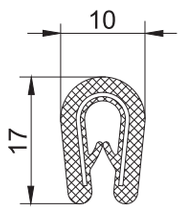	**UT-4.6**	1,0-4,0	C	PCV	100

C - black, **B** - white, **S** - gray, **SJ** - bright gray , **SC** - dark gray

* Time of delivery 5-6 weeks

	Design (section of gasket)	Code	Clamping range [mm]	Colour	Material	Sales unit [m]
	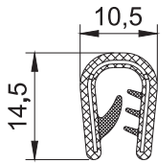	**UT-4.7**	2,0-5,0	C	PCV	100
	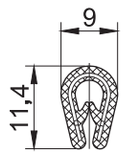	**UT-4.8.2**	1,0-2,5	C	PCV	100
		UT-4.8.4	2,0-4,0	C	PCV	100
	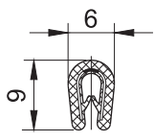	**UT-4.9.01**	1,0-2,0	C	PCV	100
		UT-4.9.02	1,0-2,0	B*	PCV	100
		UT-4.9.03	1,0-2,0	S	PCV	100
	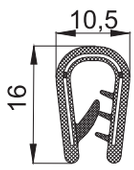	**UT-4.10.2**	2,0-4,0	C	PCV	100
	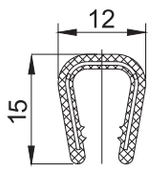	**UT-3.8**	6,0-8,0	C	PCV	100
		UT-3.10	8,0-10,0	C	PCV	100
	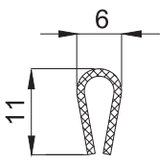	**UT-2**	1,7-2,3	C	PCV	25

C - black, **B** - white, **S** - gray, **SJ** - bright gray , **SC** - dark gray

* Time of delivery 5-6 weeks

	Design (section of gasket)	Code	Clamping range [mm]	Colour	Material	Sales unit [m]
	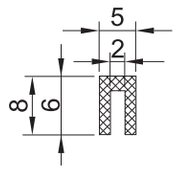	**UT-5**	2,0	C	EPDM	100
	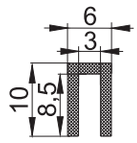	**UT-5.1**	3,0	C	EPDM	100
	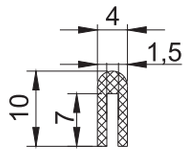	**UT-5.2**	1,5	C	EPDM	100
	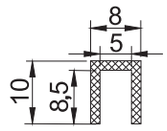	**UT-5.3**	5,0	C	EPDM	100
	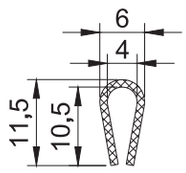	**UT-5.4**	4,0	C	EPDM	100
	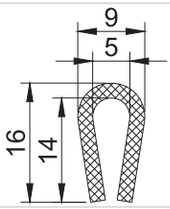	**UT-5.5**	5,0	C	EPDM	100
	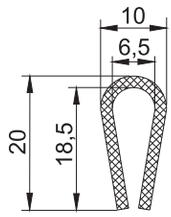	**UT-5.6**	6,5	C	EPDM	100
	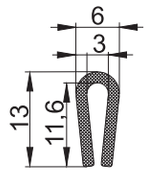	**UT-5.7**	3,0	C	EPDM	100

C - black, **B** - white, **S** - gray, **SJ** - bright gray , **SC** - dark gray

* Time of delivery 5-6 weeks

	Design (section of gasket)	Code	Clamping range [mm]	Colour	Material	Sales unit [m]
	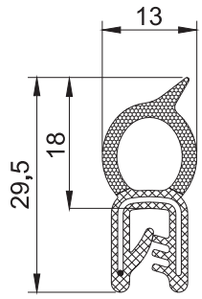	**UT-30.1**	1,0-2,5	C	EPDM	50
		UT-30.4	2,0-4,0	C	EPDM	50
	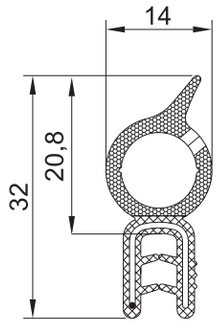	**UT-30.2**	1,0-3,0	C	EPDM	50
	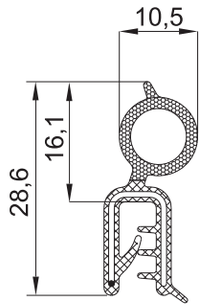	**UT-35**	1,0-2,5	C	EPDM	50
	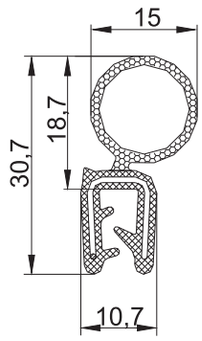	**UT-35.1**	1,0-3,0	C	EPDM	50

C - black, **B** - white, **S** - gray, **SJ** - bright gray , **SC** - dark gray

* Time of delivery 5-6 weeks

- EPDM **- PVC**

	Design (section of gasket)	Code	Clamping range [mm]	Colour	Material	Sales unit [m]
	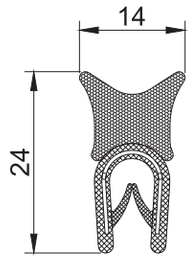	**UT-31**	1,0-4,0	C	EPDM PCV	50
	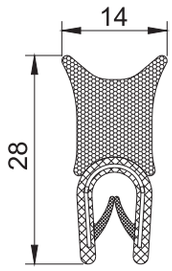	**UT-31.2**	1,0-4,0	C	EPDM PCV	50
	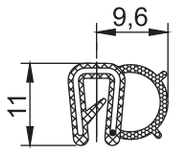	**UT-33.2**	1,0-2,0	C	EPDM	50
	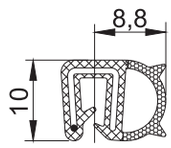	**UT-33.3**	1,0-2,5	C	EPDM	100

C - black, **B** - white, **S** - gray, **SJ** - bright gray , **SC** - dark gray
* Time of delivery 5-6 weeks

- EPDM **- PVC**

	Design (section of gasket)	Code	Clamping range [mm]	Colour	Material	Sales unit [m]
	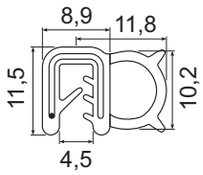	**UT-33.4**	1,0-2,5	C	EPDM	100
	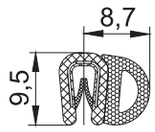	**UT-34**	1,0-2,0	C	EPDM PCV	100
	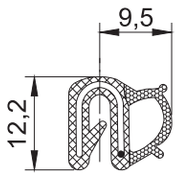	**UT-37**	0,8-2,5	C	EPDM	50
	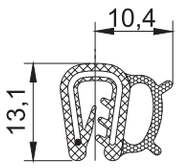	**UT-37.1**	2,0	C	EPDM	50
	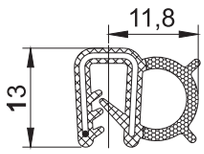	**UT-57A**	2,0	C	EPDM	50

C - black, **B** - white, **S** - gray, **SJ** - bright gray , **SC** - dark gray

* Time of delivery 5-6 weeks

- EPDM **- PVC**

	Design (section of gasket)	Code	Clamping range [mm]	Colour	Material	Sales unit [m]
	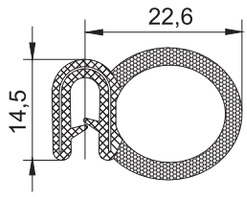	**UT-8**	1,0-4,0	C	EPDM	25
	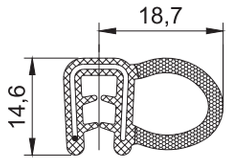	**UT-8.2**	1,5-3,0	C	EPDM	25
	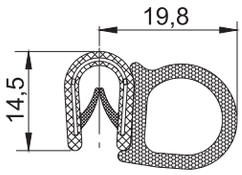	**UT-8.3**	1,0-4,0	C	EPDM PCV	50
	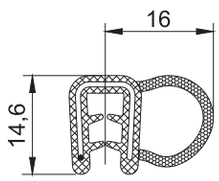	**UT-8.4**	1,5-3,0	C	EPDM	50
	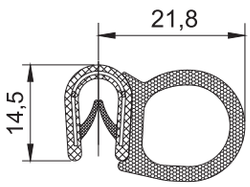	**UT-8.5**	2,0-5,0	C	EPDM PCV	50

C - black, **B** - white, **S** - gray, **SJ** - bright gray , **SC** - dark gray

* Time of delivery 5-6 weeks

- EPDM **- PVC**

	Design (section of gasket)	Code	Clamping range [mm]	Colour	Material	Sales unit [m]
	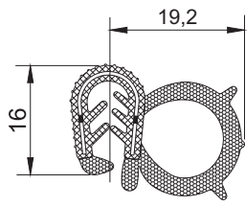	**UT-8.6.4**	2,0-4,0	C	EPDM	25
		UT-8.6.6	4,0-6,0	C	EPDM	25
	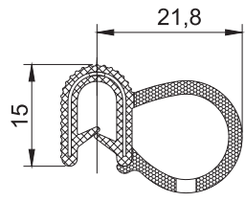	**UT-8.7**	1,0-3,5	C	EPDM	25
	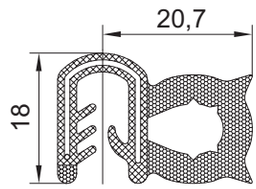	**UT-8.8**	3,5-5,0	C	EPDM	3000
	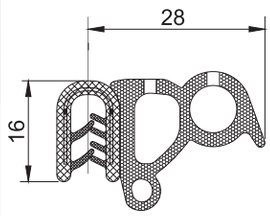	**UT-9.2**	1,0-2,5	C	EPDM PCV	50
		UT-9.4	2,5-4,0	C	EPDM PCV	50
		UT-9.6	4,0-6,0	C	EPDM PCV	50
	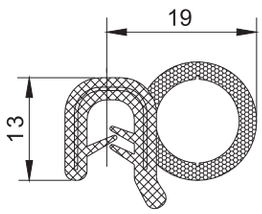	**UT-10.3**	6,0	C	EPDM PCV	100

C - black, **B** - white, **S** - gray, **SJ** - bright gray , **SC** - dark gray

* Time of delivery 5-6 weeks

- EPDM **- PVC**

	Design (section of gasket)	Code	Clamping range [mm]	Colour	Material	Sales unit [m]
	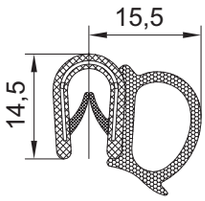	**UT-70**	1,0-4,0	C	EPDM	50
	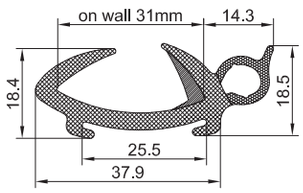	**UTB-1**	-	C	EPDM	100
	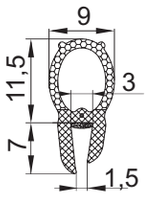	**UTB-2**	1,5	C	EPDM	5000
	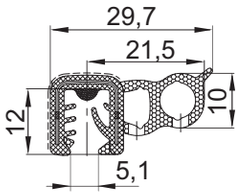	**UTB-9**	5,0-6,0	C	EPDM	100

C - black, **B** - white, **S** - gray, **SJ** - bright gray , **SC** - dark gray
* Time of delivery 5-6 weeks

- EPDM **- PVC**

	Design (section of gasket)	Code	Clamping range [mm]	Colour	Material	Sales unit [m]
	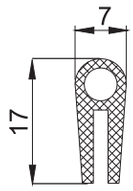	**UT-26A**	2,0-3,0	C	EPDM	100
	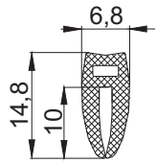	**UT-27**	1,8	C	EPDM	50
	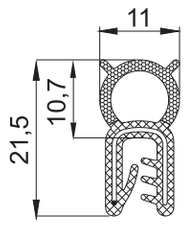	**UT-32**	1,0-3,0	C	EPDM	50
	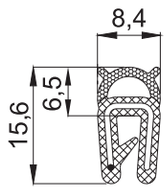	**UT-38**	1,0-2,0	C	EPDM	50
	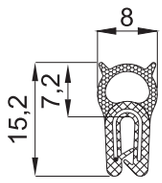	**UT-42**	0,5-1,5	C	EPDM	50
	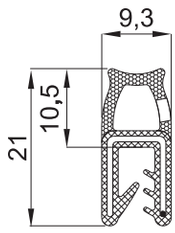	**UT-51**	1,0-3,0	C	EPDM	50

C - black, **B** - white, **S** - gray, **SJ** - bright gray , **SC** - dark gray

* Time of delivery 5-6 weeks

- EPDM **- PVC**

	Design (section of gasket)	Code	Clamping range [mm]	Colour	Material	Sales unit [m]
	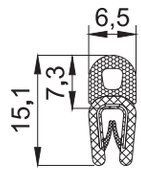	**UT-43**	1,0-2,0	C	EPDM PCV	100
	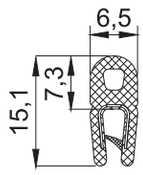	**UT-43B**	1,0-2,0	C	EPDM	102
	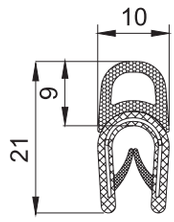	**UT-43.3**	1,0-4,0	C	EPDM PCV	50
	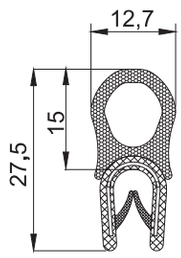	**UT-43.4**	1,0-4,0	C	EPDM PCV	50
	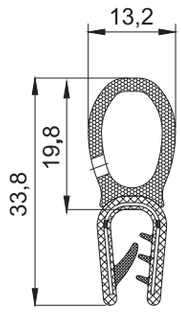	**UT-43.5.2**	1,0-2,5	C	EPDM PCV	50
		UT-43.5.4	2,0-4,0	C	EPDM PCV	50
		UT-43.5.6	4,0-6,0	C	EPDM PCV	50

C - black, **B** - white, **S** - gray, **SJ** - bright gray , **SC** - dark gray

* Time of delivery 5-6 weeks

- EPDM **- PVC**

	Design (section of gasket)	Code	Clamping range [mm]	Colour	Material	Sales unit [m]
	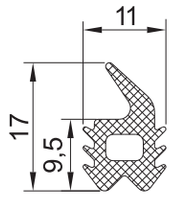	**UT-7**	-	C	PCV	7x20m
	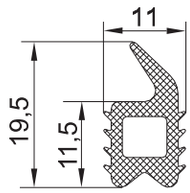	**UT-7.1**	-	C	PCV	7x20m
	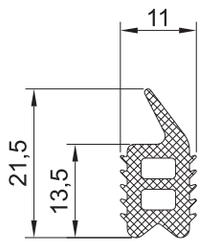	**UT-7.2**	-	C	PCV	7x20m
	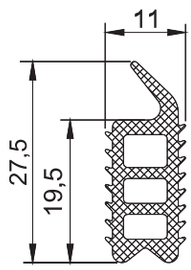	**UT-7.3**	-	C	PCV	5x20m
	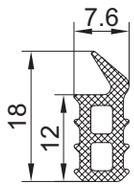	**UT-7.4**	-	C	EPDM	100
	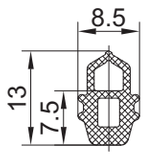	**UT-7.5**	-	C	EPDM	1500

C - black, **B** - white, **S** - gray, **SJ** - bright gray , **SC** - dark gray

* Time of delivery 5-6 weeks

- EPDM **- PVC**

	Design (section of gasket)	Code	Clamping range [mm]	Colour	Material	Sales unit [m]
	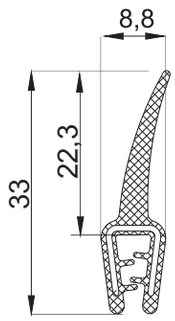	**UT-80**	1,0-3,0	C	EPDM	50
	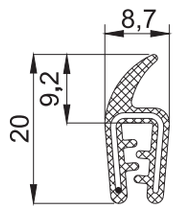	**UT-80.2**	1,0-2,0	C	EPDM	100
	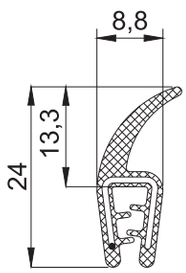	**UT-80.3**	1,0-2,5	C	EPDM	100
	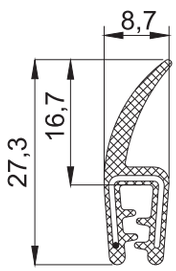	**UT-80.4**	1,0-3,0	C	EPDM	100

C - black, **B** - white, **S** - gray, **SJ** - bright gray , **SC** - dark gray

* Time of delivery 5-6 weeks

- EPDM **- PVC**

	Design (section of gasket)	Code	Clamping range [mm]	Colour	Material	Sales unit [m]
	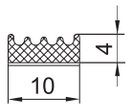	**USRE-10.04**	-	C	EPDM	125
	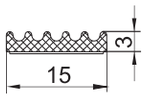	**USRE-15.03**	-	C	EPDM	100
	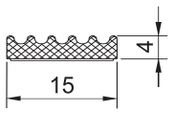	**USRE-15.04**	-	C	EPDM	100
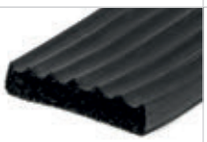	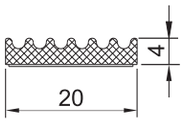	**USRE-20.04**	-	C	EPDM	50
	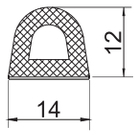	**USDE-14.12**	-	C	EPDM	40
	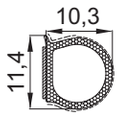	**UTK-10.11**	-	C	EPDM	100
	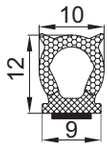	**UTK-10.12**	-	C	EPDM	100
	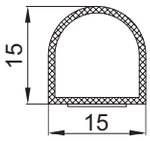	**USDE-15.15**	-	C	EPDM	100
	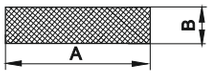					

No of gasket	A width [mm]	B height [mm]			
USPE-05.03	5	3	C	EPDM	10
USPE-08.02	8	2			200
USPE-08.03	8	3			10
USPE-10.02	10	2			100
USPE-10.03	10	3			10
USPE-10.04	10	4			15
USPE-10.05	10	5			10/15
USPE-12.03	12	3			10
USPE-12.04	12	4			10
USPE-15.03	15	3			10
USPE-15.04	15	4			10
USPE-16.08	16	8			5
USPE-18.05	18	5			15
USPE-20.03	20	3			10
USPE-20.05	20	5			10

C - black, **B** - white, **S** - gray, **SJ** - bright gray , **SC** - dark gray

- EPDM **- PVC**

* Time of delivery 5-6 weeks

ROZTOCZE

	Design (section of gasket)	Code	Clamping range [mm]	Colour	Material	Sales unit [m]
	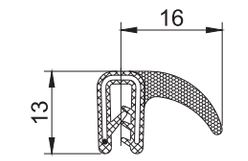	**UT-81.1**	1,0-2,0	C	EPDM PCV	100
	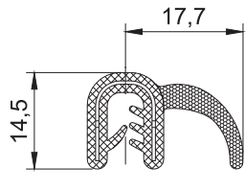	**UT-81.2**	1,25-2,0	C	EPDM PCV	100
	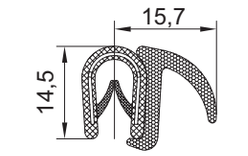	**UT-81.3**	1,0-4,0	C	EPDM	50
	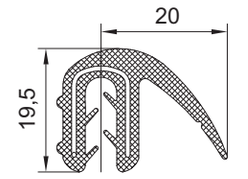	**UT-81.4**	1,0-3,5	C	EPDM	2500
	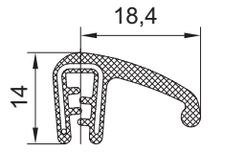	**UT-81.5**	1,0-2,5	C	EPDM	100
	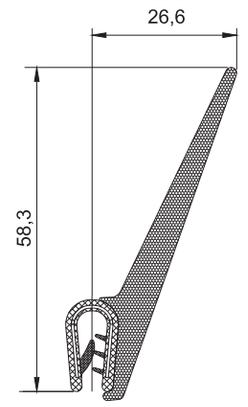	**UT-82.2**	1,0-2,5	C	EPDM PCV	25
		UT-82.4	2,0-4,0	C	EPDM PCV	25
		UT-82.6	4,0-6,0	C	EPDM PCV	25
	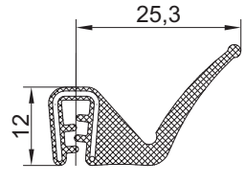	**UT-83**	1,0-2,5	C	EPDM	3000
	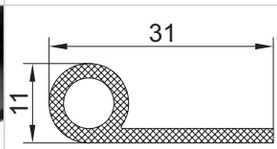	**UTP-137**	-	C	EPDM	100

C - black, **B** - white, **S** - gray, **SJ** - bright gray , **SC** - dark gray

* Time of delivery 5-6 weeks

- EPDM **- PVC**

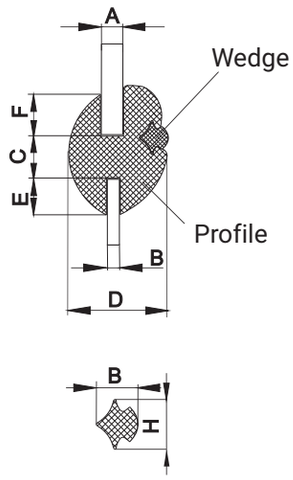

Code	A	B	C	D	E	F	Sales unit [m]	Wedge	Material
US-838	3	1	4	11.6	4.5	6	20	**US-328**	EPDM
US-838.2	3	2	4	10.2	3	3	50	**US-328.1**	
US-838.3	4	1.5	4	13.6	5	6	25	**US-328**	
US-838.4	4	2	7.3	18	11	8.7	15	**US-328.2**	
US-838.5	4	3	4	12.6	5	6	25	**US-328**	
US-838.6	4	3	7	16	7	7	20	**US-328.2**	
US-838.7	4.5	5	7	16	7	7	20	**US-328.2**	
US-838.8	5	2	5	15	6	6	50	**US-328.2**	
US-838.9	5	3	7	19	8	8	20	**US-328.2**	
US-838.10	6	2.5	7	19	8	8	20	**US-328.2**	

Wedge	H	B	Material	Colour
US-328	7,0	6,0	EPDM	C
US-328.1	5,5	4,5		
US-328.2	9,5	7,5		

Notice:
strengthening frame profile should be ordered with the wedge
* wedge fixing tools to order with the manufacturer

C - black, **B** - white, **S** - gray, **SJ** - bright gray , **SC** - dark gray
* Time of delivery 5-6 weeks

	Design (section of gasket)	Code	Clamping range [mm]	Colour	Material	Sales unit [m]
	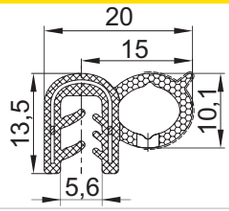	**UTG-1**	3,0-4,5	C	EPDM	100
	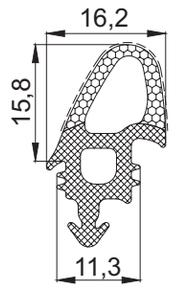	**UTG-2**	-	C	EPDM	100
	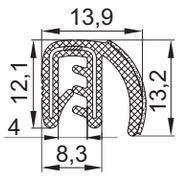	**UTF-1**	1,0-2,5	C	EPDM	100
	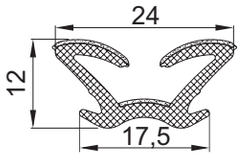	**UTF-2**	-	C	EPDM	100
	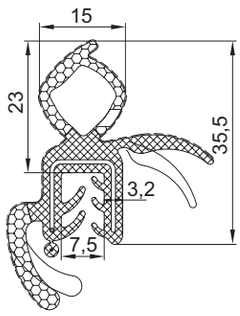	**UTGF-1**	2,5-5,0	C	EPDM	100
	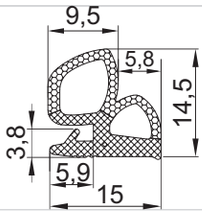	**UTGF-2**	-	C	EPDM	100

Sealing profiles with shielding electromagnetic interference / RFI signals.

	Design (section of gasket)	Code	Clamping range [mm]	Colour	Material	Sales unit [m]
	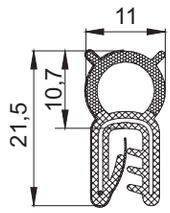	**UT-32.EMV**	1,0-3,0	C	EPDM*	100
	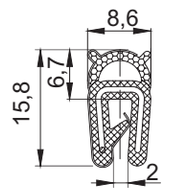	**UT-38.EMV**	1,0-2,0	C	EPDM*	100
	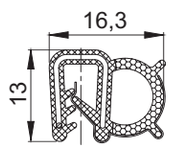	**UT-57A.EMV**	2,0	C	EPDM*	100
	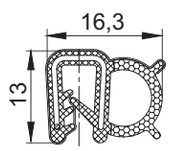	**UT-57B.EMV**	2,0	C	EPDM*	100
	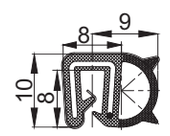	**UT-33.3.EMV**	1,0-2,5	C	EPDM*	100
	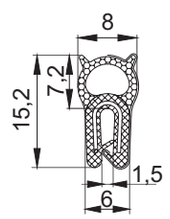	**UT-42.EMV**	0,5-1,5	C	EPDM*	100

* Soft-sponge rubber with conductive overall coating and steel spring core.

C - black, **B** - white, **S** - gray, **SJ** - bright gray , **SC** - dark gray

* Time of delivery 5-6 weeks

Sealing profiles from UR group meets railway norm **EN 45545-2**

solid rubber (50,60,70 Shore A), classification R22/R23 HL3
sponge rubber (density 0,8 g / cm3), classification R22/R23 HL2

	Design (section of gasket)	Code	Clamping range [mm]	Colour	Material	Sales unit [m]
	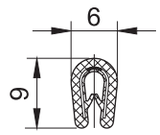	**UR-4.9.01**	1,0-2,0	C	EPDM	100
	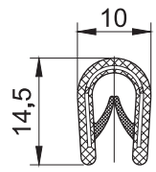	**UR-4.4.01**	1,0-4,0	C	Hexflame 45-1000	100
	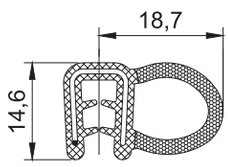	**UR-8.2**	1,5-3,0	C	EPDM	100
	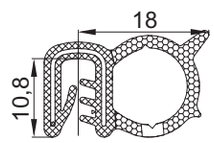	**UR-8.8**	1,0-3,0	C	PCV	100

C - black, **B** - white, **S** - gray, **SJ** - bright gray , **SC** - dark gray
* Time of delivery 5-6 weeks

Sealing profiles from UR group meets railway norm **EN 45545-2**

solid rubber (50,60,70 Shore A), classification R22/R23 HL3
sponge rubber (density 0,8 g / cm3), classification R22/R23 HL2

	Design (section of gasket)	Code	Clamping range [mm]	Colour	Material	Sales unit [m]
	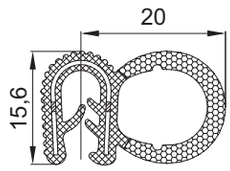	**UR-8.9**	2,0-3,5	C	PCV	100
	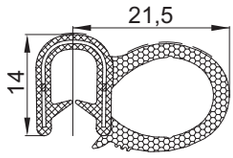	**UR-8.10**	1,0-4,0	C	PCV	100
	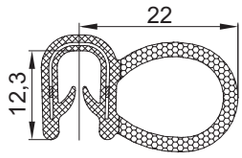	**UR-8.11**	1,0-4,0	C	PCV	100
	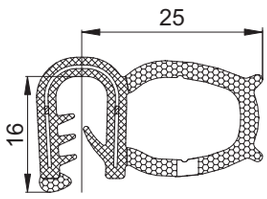	**UR-8.12**	3,0-4,5	C	PCV	on request

C - black, **B** - white, **S** - gray, **SJ** - bright gray , **SC** - dark gray
* Time of delivery 5-6 weeks

Sealing profiles from UR group meets railway norm **EN 45545-2**

solid rubber (50,60,70 Shore A), classification R22/R23 HL3
sponge rubber (density 0,8 g / cm3), classification R22/R23 HL2

	Design (section of gasket)	Code	Clamping range [mm]	Colour	Material	Sales unit [m]
	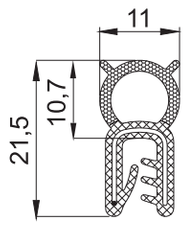	**UR-32**	1,0-3,0	C	EPDM	100
	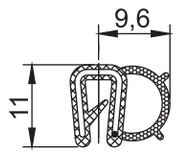	**UR-33.2**	1,0-2,0	C	EPDM	100
	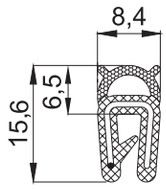	**UR-38**	1,0-2,0	C	EPDM	100
	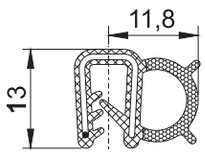	**UR-57A**	2,0	C	EPDM	100

C - black, **B** - white, **S** - gray, **SJ** - bright gray , **SC** - dark gray
* Time of delivery 5-6 weeks

Sealing profiles from UR group meets railway norm **EN 45545-2**

solid rubber (50,60,70 Shore A), classification R22/R23 HL3
sponge rubber (density 0,8 g / cm3), classification R22/R23 HL2

	Design (section of gasket)	Code	Clamping range [mm]	Colour	Material	Sales unit [m]
	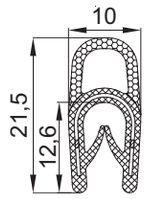	**UR-43.3**	1,0-4,0	C	PCV	on request
	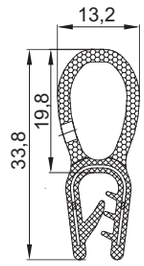	**UR-43.5**	1,5-3,0	C	PCV	on request
	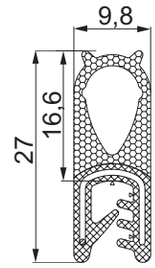	**UR-43.6**	2,0-4,0	C	EPDM	100
	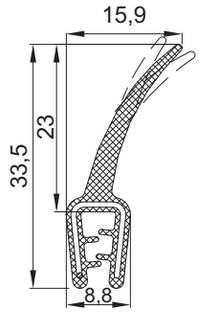	**UR-80.5**	1,0-2,0	C	PCV	on request
	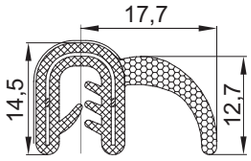	**UR-81.3**	1,25-2,0	C	PCV	on request

C - black, **B** - white, **S** - gray, **SJ** - bright gray , **SC** - dark gray
* Time of delivery 5-6 weeks

VDI 6022 - standard defining hygienic requirements for air handling units and air-conditioning units

	Design (section of gasket)	Code	Clamping range [mm]	Colour	Material	Sales unit [m]
	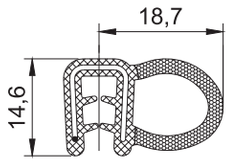	**UT-8.2.VDI**	1,5-3,0	C	EPDM	25
	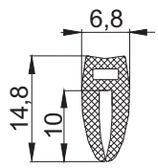	**UT-27.VDI**	1,8	C	EPDM	50
	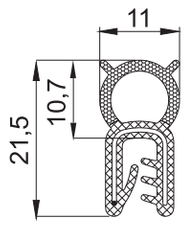	**UT-32.VDI**	1,0-3,0	C	EPDM	50
	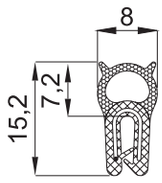	**UT-42.VDI**	0,5-1,5	C	EPDM	50
	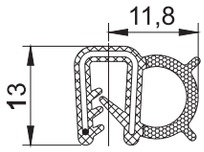	**UT-57A.VDI**	2,0	C	EPDM	50

Custom products

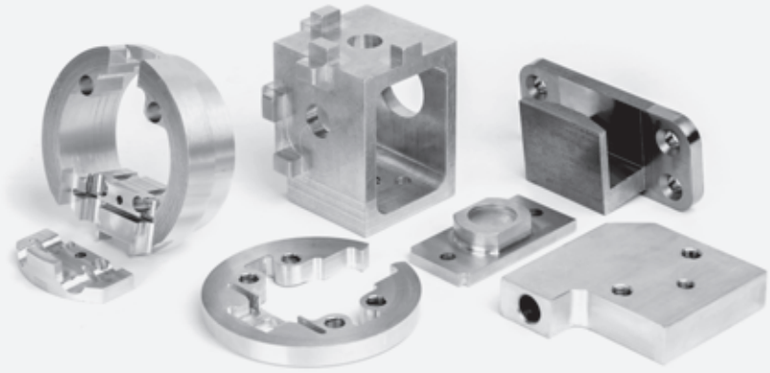

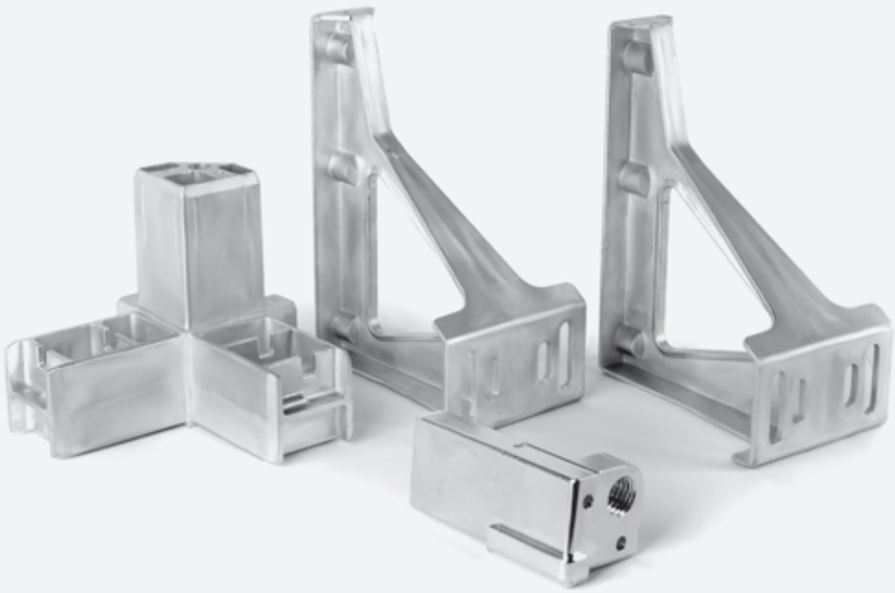

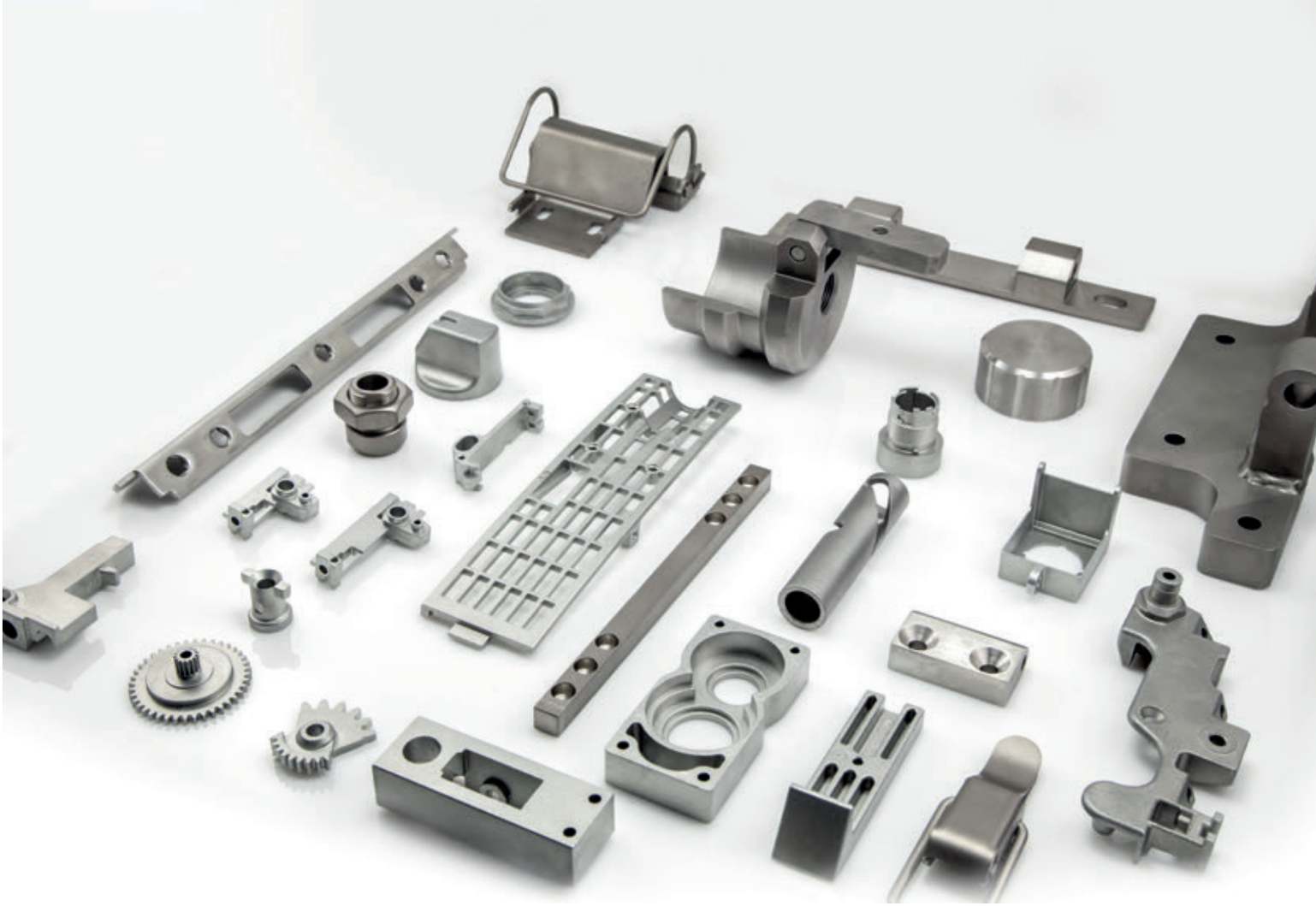

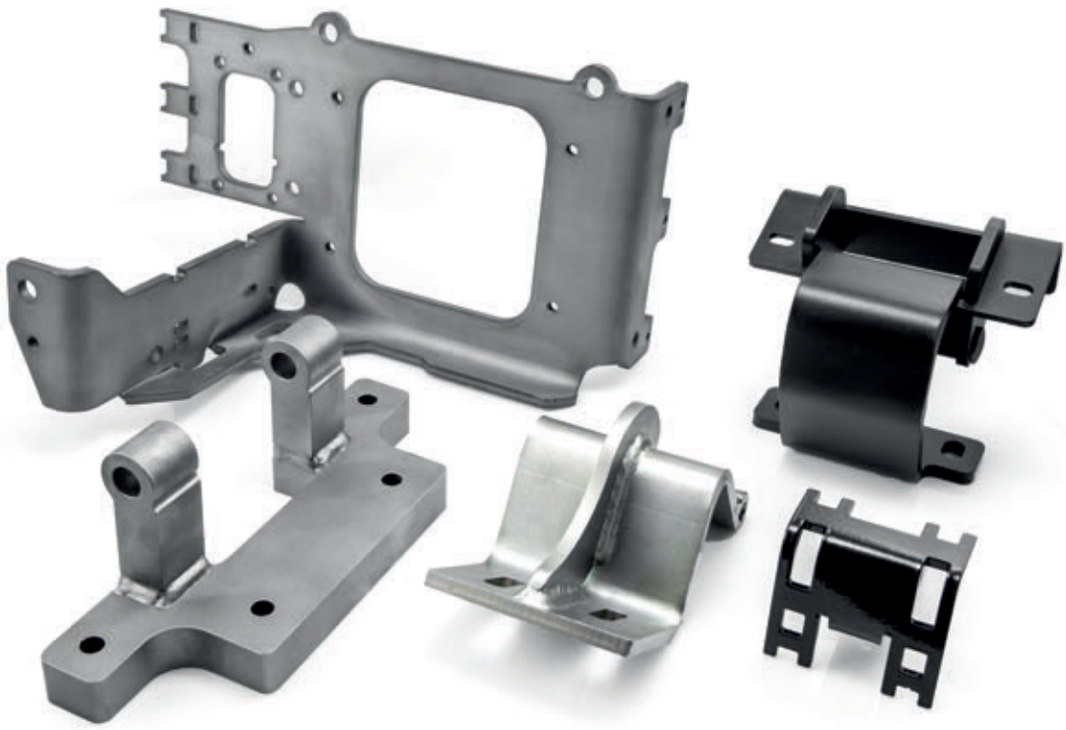

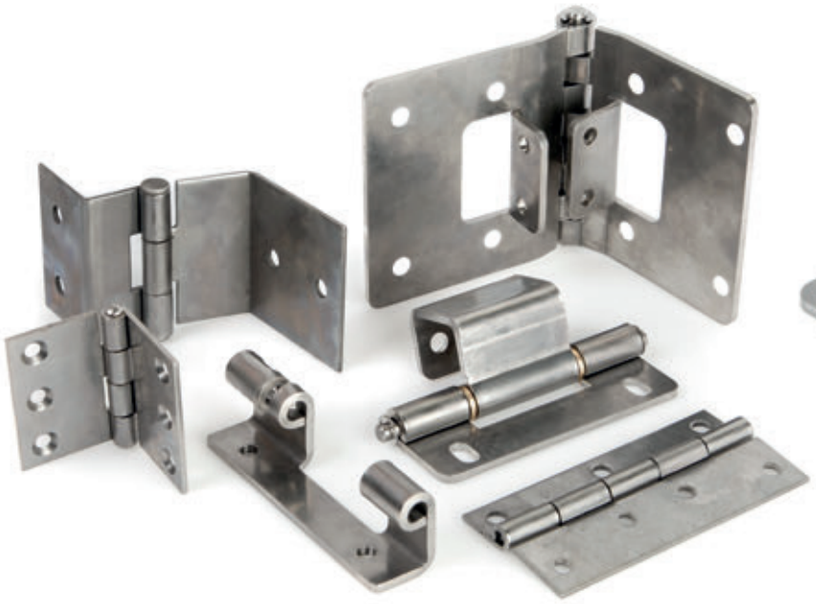

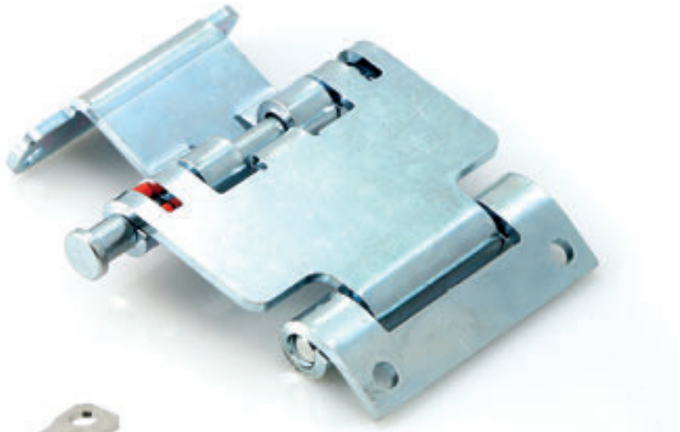

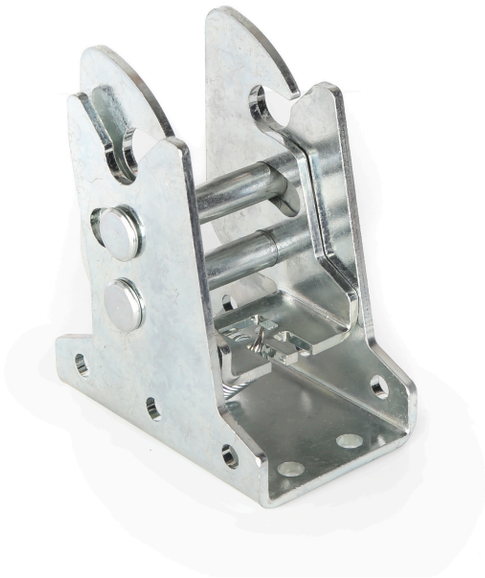

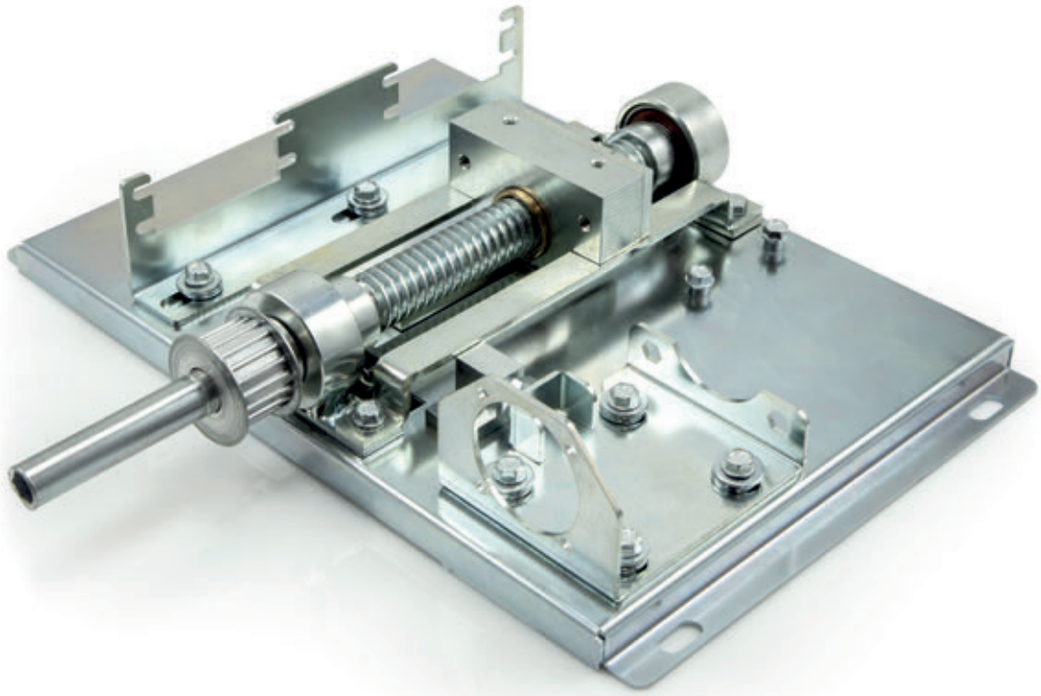

Index

Index

Index

ROZTOCZE

[1A] LOCKING SYSTEMS

Anti-panic lock 1B.ZA.001 ..... 1A-13
Anti-panic lock 1B.ZA.002 ..... 1A-14
Anti-panic lock 1B.ZA.003 ..... 1A-15
Anti-panic lock 1B.ZA.004 ..... 1A-16
Anti-panic lock 1B.ZA.005 ..... 1A-17
Anti-panic lock 1B.ZA.006 ..... 1A-18
Anti-panic lock 1B.ZA.007 ..... 1A-19
Anti-panic lock for double wing door 1A-20
Anti-panic lock 1A-12
Cogwheel mechanism distance 1A-9
External fitting with handle for anti-panic locks 1A-21, 22
Locking system (outside the IP) RW250 ..... 1A-10
Locking system for aluminium profile door 1A-7
Locking system of lock bolt 1A-8
Locking system outside the IP RW250 ..... 1A-11
Locking system with holes 50 x 25 ..... 1A-5
Locking system with holes 50 x 25 ..... 1A-6
Locking system with space between holes 105/130 internal locks ... 1A-2
Locking system with space between holes 50/55 ..... 1A-3
Locking system with space between holes 50/55 ..... 1A-4
Locking systems with space between holes 95/105/130 ..... 1A-1
Mounting holes spacing in anti-panic locks 1A-23
Rod strenghtening system 1A-9

[1B] SWINGHANDLE

RS-E Elektronic lock 1B-10
RS100 ..... 1B-3
RS100/T 1B-3
RS100/U 1B-3
RS110 ..... 1B-4
RS130 ..... 1B-8
RS130/U 1B-8
RS135 ..... 1B-8
RS135/U 1B-8
RS140 ..... 1B-8
RS140/U 1B-8
RS145 ..... 1B-8
RS145/U 1B-8
RS150 ..... 1B-26
RS151MZ 1B-36
RS151N 1B-34
RS151N 1B-35
RS152MZ 1B-36
RS152N 1B-34
RS152N 1B-35
RS154 ..... 1B-25
RS160 ..... 1B-29
RS161 ..... 1B-30
RS168 ..... 1B-32
RS168/B 1B-32
RS169 ..... 1B-33
RS170 ..... 1B-33
RS173 ..... 1B-13
RS174 ..... 1B-31
RS175 ..... 1B-31
RS200 ..... 1B-3
RS200/T 1B-3
RS200/U 1B-3
RS210 ..... 1B-4
RS300 ..... 1B-23
RS400 ..... 1B-5
RS400/U 1B-5
RS400W 1B-5
RS400W/U 1B-5
RS420 ..... 1B-5
RS420/U 1B-5
RS420W 1B-5
RS430 ..... 1B-6
RS430/U 1B-6
RS500 ..... 1B-5
RS500/U 1B-5
RS500W 1B-5
RS500W/U 1B-5
RS510 ..... 1B-7
RS 520 ..... 1B-5
RS520/U 1B-5
RS520W 1B-5
RS530 ..... 1B-6
RS530/U 1B-6
RS600 ..... 1B-12
RS610 ..... 1B-12
RS650 ..... 1B-11
RS700 ..... 1B-14
RS710 ..... 1B-14
RS715 ..... 1B-15
RS716 ..... 1B-15
RS717 ..... 1B-17
RS720 ..... 1B-18
RS730 ..... 1B-16
RS750 ..... 1B-23
RS750 ..... 1B-23
RS761 ..... 1B-19
RS761 ..... 1B-21
RS762 ..... 1B-20
RS762 ..... 1B-21
RS763 ..... 1B-21
RS763 ..... 1B-22
RS790 ..... 1B-24
RS800 ..... 1B-4
RS900 ..... 1B-7
RS950 Swinghandle anti-theft 1B-28
RS980 ..... 1B-27

LOCK RW

RW100 ..... 1B-37
RW110 ..... 1B-37
RW200 ..... 1B-38
RW400/N 1B-18
RW400/M 1B-18
RW410/N 1B-18
RW410/M 1B-18
RW500 ..... 1B-38
RW510 ..... 1B-40
RW520 ..... 1B-40

Internal lock for passive door 1B-41
Lever Lock 1B.ZD100 ..... 1B-44
Lock ZWA1 ..... 1B-42
Lock ZWA1 ..... 1B-43
ZW, PANIK - ZWP 1B-1
ZWP.002 ..... 1B-2

[1C] LOCKING SYSTEMS COMPONENTS

AAdapter 1C.903 ..... 1C-27
Adapter 1C.916 ..... 1C-43
Cam adapter JC-20018/36 ..... 1C-24
Quick Assembly Fastener 1C.921.001 ..... 1C-26

Cam
1-point cam without limiter 1C-12
1-point cam without limiter 1C-13
1-point cam without limiter 1C-14
1-point cam with limiter 1C-10
1-point cam with limiter 1C-11
1-point cam 1C-20
1-point cam 1C-21
1-point cam 1C-9
1-point cam JZ 1C-23
2-point cam 1C-15
3-point cam withuot limiter 1C-19
3-point cam without limiter 1C-15
3-point cam with limiter 1C-17
3-point cam with limiter 1C-18
3-point cam with limiter 1C-22
3-point cam 1C-16
Cam ZAMAK JZN-10027/30 ..... 1C-24

Cogwheel mechanism
MZ1 ..... 1C-28
MZ1 ..... 1C-29
MZ2 ..... 1C-30
MZ2 ..... 1C-31
MZ2 ..... 1C-32
MZ3 ..... 1C-33
MZ1-DB.002 ..... 1B-39
MZ1K-DB.002 ..... 1B-39
MZ1P-DB.002 ..... 1B-39
Bushing 1C.901 ..... 1C-27
Cap 1C.902 ..... 1C-27
Catch 1C-35
Catch 1C-36
Catchs W314 ..... 1C-38
Catch W314-70 ..... 1C-39
Flat rods 1C-35
Flat rods 1C-36
Flat rods ver. B 1C-37
Flat rods ver. C 1C-39
Flat rods ver. D 1C-40
Flat rod with rollers 1C-34
Grip handle 1C.904 ..... 1C-40
Lock cylinder WRS-B 1C-2
Lock cylinder WRS-WCM 1C-1
Multipoint locking system with one flat bar 1C-41, 42
Rod guide 1C.906.100 ..... 1C-7
Rod guide 1C.906 ..... 1C-6
Rod guide P314 ..... 1C-8
Rod guide Ø6 ..... 1C-6
Rod guide Ø8 ..... 1C-6
Rod Ø6 ..... 1C-4
Rod Ø8 ..... 1C-4
Rod Ø8 ..... 1C-5
Self-locking cylinder WRS-P 1C-2
Shaped insert WRS-X 1C-1
Shaped insert WSR-360-X 1C-2
Shape insterts WRS-D13 ..... 1C-3
Sliding End Cap 1C.920.001 ..... 1C-25

[2A] LOCKS

Explanation of open fields 2A-1
Information card 2A-2
Adapter 2.920 ..... 2A-118
AX 2A-117

Blockade
2.901 ..... 2A-108
2.902 ..... 2A-107
2.903 ..... 2A-108
2.904 ..... 2A-107
2.905 ..... 2A-107
2.910 ..... 2A-109

Key
2.KL.009 ..... 2A-116
2.KLA-X 2A-111
2.KLB-X 2A-111
2.KL-D13S.008 ..... 2A-115
2.KLD-T13 ..... 2A-111
2.KL-X.001 ..... 2A-112
2.KL-X.002 ..... 2A-112
2.KL-X.003 ..... 2A-113
2.KL-X.004 ..... 2A-113
2.KL-X.005 ..... 2A-114
2.KL-X.006 ..... 2A-114
2.KL-X.007 ..... 2A-115
KLT-WF 2A-116
2.KLE-GZ 2A-110
K2.KLF-GZ 2A-110

Cover 2.904.020SN 2A-53
Dust cover 2.904 ..... 2A-104
Handle for lock 2.905 ..... 2A-105
Internal handle 1C.DB.002 ..... 2A-76
Locking flap 2.700 ..... 2A-102
Overview of lock inserts M22 ..... 2A-3
T-Handle Dust Cover 2.904.010 ..... 2A-75
Wing knobs type M 2A-10

Lock
2.501 ..... 2A-99
2.502 ..... 2A-100
2.503 ..... 2A-98
2.504 ..... 2A-95
2.505 ..... 2A-97
2.506 ..... 2A-66
2.507 ..... 2A-101
2.509 ..... 2A-88
2.510 ..... 2A-93
2.510 ..... 2A-94
2.511 ..... 2A-91
2.512 ..... 2A-100
2.515 ..... 2A-90
2.516 ..... 2A-89
2.520 ..... 2A-98

Index

2.521 ..... 2A-97
2.525 ..... 2A-59
2.526 ..... 2A-80
2.527 ..... 2A-59
2.528 ..... 2A-58
2.529 ..... 2A-31
2.530 ..... 2A-56
2.531 ..... 2A-79
2.532 ..... 2A-79
2.533 ..... 2A-83
2.540 ..... 2A-78
2.544 ..... 2A-80
2.601 ..... 2A-87
2.602 ..... 2A-4
2.603 ..... 2A-68
2.604 ..... 2A-84
2.605 ..... 2A-84
2.606 ..... 2A-82
2.607 ..... 2A-82
2.608 ..... 2A-81
2.609 ..... 2A-81
2.610 ..... 2A-92
2.611 ..... 2A-31
2.612 ..... 2A-31
2.613 ..... 2A-85
2.615 ..... 2A-86
2.616 ..... 2A-69
2.630 ..... 2A-67
2.800 ..... 2A-77
JZ-3522 Lock with self-locking cam 2A-62
2.M19 ..... 2A-66
M16 ..... 2A-4
M16/19 ..... 2A-5
M16/45 ..... 2A-4
M16SD22 ..... 2A-54
M19-1 ..... 2A-6
M19DC 2A-61
M19W 2A-29
M22-1 ..... 2A-7
M22-2 ..... 2A-8
M22-3 ..... 2A-9
M22-30 ..... 2A-20
M22-40 ..... 2A-21
M22-5 ..... 2A-14
M22-60 ..... 2A-21
M22B 2A-17
M22BK 2A-65
M22D 2A-12
M22DC 2A-61
M22D-M 2A-68
M22-DU 2A-11
M22DW 2A-26
M22DW22 ..... 2A-25
M22EW 2A-28
M22FW 2A-28
M22GP4 ..... 2A-15
M22GP5 ..... 2A-15
M22IP 2A-32
M22JR-SN 2A-49
M22K 2A-16
M22KW 2A-16
M22MS 2A-27
M22P 2A-13
M22PM-K 2A-64
M22PW 2A-26
M22R 2A-37
M22SA 2A-46
M22SA2 ..... 2A-41
M22SC 2A-45
M22SD20SN 2A-40
M22SD22 ..... 2A-55
M22SD30 ..... 2A-42
M22SD40 ..... 2A-44
M22SE 2A-47
M22SG 2A-48
M22SK30 ..... 2A-50
M22SK32 ..... 2A-51
M22SK37 Pressure 2A-52
M22SP 2A-39
M22SP2 ..... 2A-43
M22TR 2A-33
M22W 2A-24
M22W32 ..... 2A-25
M22ZD 2A-22
M22ZW 2A-23
M22ZW22 ..... 2A-23
M24 ..... 2A-19
M24B 2A-18
M24C 2A-60
M24ZN 2A-19
M28-1 ..... 2A-57
M28-2 ..... 2A-57
M22-6 Snap lock 2A-63
RW300 with knob 2A-72
TR12 ..... 2A-103
With handle L 2A-73
With handle T 2A-74
Z-0233 ..... 2A-30
Z-2106 ..... 2A-30
2.PM 2A-70
2.PM 2A-71
2.PMPA 2A-70
2.PMPA 2A-71
ZG 2A-117
ZG 2A-117
ZZR18 ..... 2A-34
ZZR18.010 ..... 2A-35
ZZR19 ..... 2A-34
ZZR28 ..... 2A-34
ZZR28/S 2A-36
ZZR38 ..... 2A-34
ZZR50 ..... 2A-34
CZ-E1 ..... 2A-37
GE-0100 ..... 2A-38
GE-0101 ..... 2A-38
Roller latch 2.200 ..... 2A-96
Roller latch 2.210 ..... 2A-96

[2B] LATCHES

3.561 ..... 2B-10
3.562 ..... 2B-11
3.563 ..... 2B-12
3.565 ..... 2B-15
3.566 ..... 2B-15
3.567 ..... 2B-16
3.ST200 Catch 2B-2
3.ST201 ..... 2B-1
3.ST202 ..... 2B-1
3.ST204 ..... 2B-2
3.ST205 ..... 2B-2
3.ST206 ..... 2B-5
3.ST207 ..... 2B-5
3.ST208 ..... 2B-8
3.ST209 ..... 2B-6
3.ST210 ..... 2B-8
3.ST211 ..... 2B-6
3.ST261 ..... 2B-7
3.ST262 ..... 2B-7
3.ST263.001 ..... 2B-9
3.ST263.100 ..... 2B-9
3.ST263.101 ..... 2B-10
3.ST264.002 ..... 2B-14
3.ST264 ..... 2B-3
3.ST265 ..... 2B-3
3.ST265 ..... 2B-4
3.ST267 ..... 2B-14
4.490 ..... 2B-13
4.491 ..... 2B-13
4.700 Bolt 2B-16

[3A, 3B] HINGES

3.501 ..... 3B-47
3.502 ..... 3B-47
3.503 ..... 3B-47
3.504 ..... 3A-63
3.505 ..... 3A-63
3.506 ..... 3A-63
3.507 ..... 3A-63
3.509 ..... 3A-5
3.510 ..... 3A-6
3.511 ..... 3A-7
3.512 ..... 3A-11
3.513 ..... 3A-12
3.514 ..... 3A-31
3.516 ..... 3A-19
3.517 ..... 3A-34
3.518 ..... 3A-35
3.519 ..... 3A-31
3.526 ..... 3A-19
3.527 ..... 3A-18
3.529 ..... 3A-22
3.530 ..... 3A-22, 23
3.531 ..... 3A-32
3.532 ..... 3A-24
3.534 ..... 3A-46
3.535 ..... 3A-33
3.536 ..... 3A-24
3.537 ..... 3B-14
3.538 ..... 3B-44
3.539 ..... 3B-44
3.540 ..... 3A-14
3.541 ..... 3A-13
3.543 ..... 3A-16
3.544 ..... 3A-17
3.545 ..... 3A-17
3.550 ..... 3B-42
3.ST4 ..... 3B-1
3.ST4-1 ..... 3B-1
3.ST5 ..... 3B-7
3.ST6 ..... 3B-7
3.ST7 ..... 3B-43
3.ST7-1 ..... 3B-43
3.ST7-2 ..... 3B-43
3.ST8 ..... 3B-18
3.ST9 ..... 3B-18
3.ST10 ..... 3B-17
3.ST11 ..... 3B-17
3.ST12 ..... 3B-11
3.ST12-1 ..... 3B-13
3.ST12-1B 3B-12
3.ST12-2 ..... 3B-11
3.ST12B 3B-12
3.ST13 ..... 3B-5
3.ST15 ..... 3B-17
3.ST16 ..... 3B-6
3.ST17 ..... 3A-64
3.ST18 ..... 3A-64
3.ST19-2 ..... 3B-14
3.ST20 ..... 3B-29
3.ST20 ..... 3B-31
3.ST21 ..... 3A-65
3.ST22 ..... 3A-65
3.ST23 ..... 3A-33
3.ST24 ..... 3B-30
3.ST24-34 ..... 3B-30
3.ST26 ..... 3B-37
3.ST26 ..... 3B-38
3.ST27 ..... 3B-3
3.ST27-1 ..... 3B-3
3.ST28 ..... 3A-52
3.ST29 ..... 3A-66
3.ST30 ..... 3A-44
3.ST31 ..... 3B-19
3.ST32 ..... 3B-10
3.ST33 ..... 3B-19
3.ST34 ..... 3B-19
3.ST35 ..... 3A-45
3.ST35-1 ..... 3A-45
3.ST35-2 ..... 3A-47
3.ST37 ..... 3A-51
3.ST38 ..... 3B-20
3.ST39 ..... 3B-20
3.ST40 ..... 3B-16
3.ST41 ..... 3B-16
3.ST42 ..... 3A-30
3.ST4-2 ..... 3B-2
3.ST43 ..... 3B-8
3.ST43 ..... 3B-9
3.ST4-4 ..... 3B-2
3.ST46 ..... 3B-27

3.ST46 ..... 3B-28
3.ST47 ..... 3B-5
3.ST48 ..... 3A-51
3.ST49 ..... 3A-57
3.ST50 ..... 3B-39
3.ST53 ..... 3A-61
3.ST54 ..... 3B-3
3.ST55 ..... 3A-51
3.ST56 ..... 3A-53
3.ST56-2 ..... 3A-54
3.ST56-2 ..... 3A-55
3.ST58 ..... 3A-47
3.ST60 ..... 3B-32
3.ST65 ..... 3B-32
3.ST67 ..... 3B-34
3.ST73 ..... 3A-62
3.ST76 ..... 3B-13
3.ST79 ..... 3B-40
3.ST81 ..... 3B-35
3.ST84 ..... 3B-35
3.ST89 ..... 3B-41
3.ST95 ..... 3B-21
3.ST96 ..... 3B-36
3.ST100 ..... 3B-26
3.ST102 ..... 3A-66
3.ST104 ..... 3B-40
3.ST105 ..... 3B-25
3.ST108 ..... 3A-52
3.ST109.001 ..... 3A-36
3.ST109.003 ..... 3A-37
3.ST109.004 ..... 3A-37
3.ST109.007 ..... 3A-38
3.ST109.009 ..... 3A-40
3.ST109.100 ..... 3A-39
3.ST109.101 ..... 3A-39
3.ST112 ..... 3B-25
3.ST114 ..... 3A-48
3.ST115 ..... 3B-4
3.ST116 ..... 3A-54
3.ST117 ..... 3A-49
3.ST118 ..... 3B-22
3.ST119 ..... 3B-24
3.ST120 ..... 3B-21
3.ST121 ..... 3B-24
3.ST123 ..... 3B-23
3.ST125 ..... 3A-41
3.ST126 ..... 3A-60
3.ST127 ..... 3A-42, 43
3.ST133 ..... 3A-46
3.ST134 ..... 3A-56
3.ST145 ..... 3A-50
3.ST146 ..... 3A-50
3.ST300 ..... 3B-48
3.ST301 ..... 3B-49
3.ST302 ..... 3B-50
3.ST551 ..... 3B-45
3.ST552 ..... 3B-45
3.ST553 ..... 3B-45
3.ST556 ..... 3B-15
3.ST557 ..... 3B-15
3.ST558 ..... 3B-46
3.STZH2 ..... 3A-62
3.STZH3 ..... 3A-62

3.ZN.75 ..... 3A-67
3.ZN10 ..... 3A-20
3.ZN13 ..... 3A-1
3.ZN20 ..... 3A-57
3.ZN23 ..... 3A-1
3.ST25 ..... 3B-42
3.ZN30 ..... 3A-9
3.ZN33 ..... 3A-2
3.ZN43 ..... 3A-2
3.ZN48-PA 3A-18
3.ZN60 ..... 3A-4
3.ZN60 ..... 3A-9
3.ZN65 ..... 3A-8
3.ZN65 ..... 3A-9
3.ZN66 ..... 3A-10
3.ZN67 ..... 3A-15
3.ZN68 ..... 3A-15
3.ZN70 ..... 3A-67
3.ZN80 ..... 3A-69
3.ZN90 ..... 3A-68
3.ZN100 ..... 3A-68
3.ZN105 ..... 3A-21
3.ZN110 ..... 3A-3
3.ZN115 ..... 3A-3
3.ZN120 ..... 3A-25
3.ZN130 ..... 3A-26
3.ZN140 ..... 3A-27
3.ZN150 ..... 3A-70
3.ZN151 ..... 3A-61
3.ZN152 ..... 3A-61
3.ZN154 ..... 3A-71, 72
3.ZN155 ..... 3A-59
3.ZN157 ..... 3A-72
3.ZN158 ..... 3A-58
3.ZN200 ..... 3A-20
3.ZN210 ..... 3A-28, 29

[4] CLAMPS TYPE V-KLEMA

Single aluminium

25-120SW 4-1
35-240SW 4-1
50-240SW 4-1
70-300SW 4-1
95-300SW 4-1
25-120SW-B 4-1
50-300SW-B* 4-1
95-300SW-B 4-1
35-240SW-C 4-1
50-240SW-C 4-1

Double aluminium

2/25-120SW 4-2
2/50-240SW 4-2
2/70-300SW 4-2
2/25-120SW-B 4-2
2/35-300SW-B 4-2
2/25-120SW-D 4-2
2/50-240SW-D 4-2
2/70-300SW-E 4-2

2/25-120SW-E 4-2

Aluminium
16-120SW 4-3
10-150.SW.A 4-3
10-150.SW.B 4-3
10-150.SW.C 4-3

HS stalowe pojedyncze
HM 6-50 4-4
HM 10-95/A 4-4
HM 10-95/B 4-4
HM 10-95/C 4-4
HM 25-150/A 4-4
HM 25-150/B 4-4
HS 6-50 4-4
HS 10-95 4-4

HS steel single
HS 25-240 4-5
HS 50-240 4-5
HS 70-300 4-5
HS 35-300-B 4-5
HS 50-300-B 4-5
HS 120-300 4-5

HS steel double
HS 2/50-240 4-6
HS 2/50-240-B 4-6
HS 2/50-240-D 4-6
HS 2/50-240-E 4-6
HS 2/70-240-C 4-7
HS 2/70-240-E 4-7
HS 2/70-300 4-7

HM steel double
HM 2/10-70-A 4-8
HM 2/10-70-B 4-8

Connecting device RBK LZ6V 4-9
Terminals for connecting device 4.601.XXX 4-9
Terminal 4.603.003 4-10
Terminal 4.603.004 4-10

Terminals, clamps
4.406.XXX 4-11
4.405.XXX 4-11

Cable clasp 4.460 4-15
Cable clasp 4.461 4-15
Cable clasp 4.462 4-15

V-klema covers
4.520.001.0X 4-12

Surge protection clamp
4.402.001 4-12
4.403.001 4-12

Knurled nuts
NR.01.00 4-13
NR.01.02 4-13
NR.01.03 4-13
NR.03.01 4-13
NR.02.01 4-13
NR.04.01 4-13
NR.05.01 4-13
NR.01.04 4-13
NR.03.02 4-13
NR.02.02 4-13

Assembling busbar
4.480.001 4-14
4.480.002.L 4-14
4.480.002.L 4-14
4.480.002.L 4-14
4.480.003 4-14
4.480.004 4-14

[5] ACCESSORIES

Adjustable feet
4.431 5-6
4.510 5-7
4.511 5-7
4.512 5-7
4.513 5-8
4.514 5-8
4.515 5-8
4.516 5-9
4.517 5-9
4.518 5-9

Adjustable lever 4.530 5-10

Air vent 4.107 5-23
Air vent 4.108 5-23
Air vent 4.109 5-23

Box holder 4.410 5-14
Bridge clamp system 4.411 5-4
Bridge clamp system 4.419 5-5

Clamp 4.426 5-39
Connector 4.429 5-5
Connector 4.500 5-2

Document pocket 4.420 5-19
Door blockade 4.401.20X 5-13
Door blockade 4.401.30X 5-13
Door blockade 4.401 5-11
Drawer handle 4.443 5-30
Fixing pivot 4.427 5-39
Frame connector 4.422 5-17

Handle
4.102 5-31
4.103 5-32
4.104 5-32
4.250 5-24
4.440 5-25
4.441 5-25
4.444 5-24

4.444 5-29
4.446 5-28
4.447 5-27
4.448 5-27
4.470 5-31
PA 4.444 5-26
Heavy duty handle 4.105 5-34
Heavy duty handle 4.105 5-35
Heavy duty handle 4.106 5-36
Heavy duty handle 4.106 5-36

Holder 4.413 5-41
Holder 4.414 5-1
Holder 4.415 5-1
Holder with seal 4.416 5-3
Holder with seal 4.417 5-3
Installation nut 4.501 5-2
Knob 4.404 5-40
Knob 4.428 5-40
Latching element 4.471 5-38
Lock with decompression function 4.110 5-33
Masking element 4.472 5-38
Masking plate bracket 4.412 5-41
Metal handle 4.442 5-30
Padlock 4.KD 5-15
Padlock 4.KDZN.100 5-16
Padlock 4.KDZN 5-15
Profile 4.450 5-17
Profile 4.450 5-18
Quick connector 4.600 5-16
Screw 4.430 5-14
Telescopic blockade 4.401 5-12
Transparent window 4.110-114 5-20
Transparent window 4.423 5-20
Transparent window 4.423 5-21
Transparent window 4.425 5-22
Trapezium nut 4.409 5-14

[6] GASKETING PROFILES

UT-2 6-2
UT-3.8 6-2
UT-3.10 6-2
UT-4 6-1
UT-4.2 6-1
UT-4.3.01 6-1
UT-4.3.02 6-1
UT-4.3.06 6-1
UT-4.4.01 6-1
UT-4.4.02 6-1
UT-4.4.04 6-1
UT-4.4.05 6-1
UT-4.5.2 6-1
UT-4.5.4 6-1
UT-4.5.6 6-1
UT-4.6 6-1
UT-4.7 6-2
UT-4.8.2 6-2
UT-4.8.4 6-2
UT-4.9.01 6-2
UT-4.9.02 6-2
UT-4.9.03 6-2
UT-4.10.2 6-2
UT-5 6-3
UT-5.1 6-3
UT-5.2 6-3
UT-5.3 6-3
UT-5.4 6-3
UT-5.5 6-3
UT-5.6 6-3
UT-5.7 6-3
UT-7 6-12
UT-7.1 6-12
UT-7.2 6-12
UT-7.3 6-12
UT-7.4 6-12
UT-7.5 6-12
UT-8 6-7
UT-8.2 6-7
UT-8.3 6-7
UT-8.4 6-7
UT-8.5 6-7
UT-8.6.4 6-8
UT-8.6.6 6-8
UT-8.7 6-8
UT-9.2 6-8
UT-9.4 6-8
UT-9.6 6-8
UT-10.3 6-8
UT-26A 6-10
UT-27 6-10
UT-30.1 6-4
UT-30.4 6-4
UT-30.2 6-4
UT-31 6-5
UT-31.2 6-5
UT-32 6-10
UT-33.2 6-5
UT-33.3 6-5
UT-33.4 6-6
UT-34 6-6
UT-35 6-4
UT-35.1 6-4
UT-37 6-6
UT-37.1 6-6
UT-38 6-10
UT-42 6-10
UT-43 6-11
UT-43B 6-11
UT-43.3 6-11
UT-43.4 6-11
UT-43.5.2 6-11
UT-43.5.4 6-11
UT-43.5.6 6-11
UT-51 6-10
UT-57A 6-6
UT-70 6-9
UT-80 6-13
UT-80.2 6-13
UT-80.3 6-13
UT-80.4 6-13
UT-81.1 6-14
UT-81.2 6-14
UT-81.3 6-14

UT-81.4 6-14
UT-81.5 6-14
UT-82.2 6-14
UT-82.4 6-14
UT-82.6 6-14
UT-83 6-14
UTP-137 6-14
UTB-1 6-9
UTB-2 6-9
UTB-9 6-9

Self-Adhesive Profile
USRE-10.04 6-15
USRE-15.03 6-15
USRE-15.04 6-15
USRE-20.04 6-15
USDE-14.12 6-15
UTK-10.11 6-15
UTK-10.12 6-15
USDE-15.15 6-15
USPE-05.03 6-15
USPE-08.02 6-15
USPE-08.03 6-15
USPE-10.02 6-15
USPE-10.03 6-15
USPE-10.04 6-15
USPE-10.05 6-15
USPE-12.03 6-15
USPE-12.04 6-15
USPE-15.03 6-15
USPE-15.04 6-15
USPE-16.08 6-15
USPE-18.05 6-15
USPE-20.03 6-15
USPE-20.05 6-15
UTG-1 6-17
UTG-2 6-17
UTF-1 6-17
UTGF-1 6-17
UTGF-2 6-17

Assembly profile
US-828 6-16
US-828.1 6-16
US-828.2 6-16
US-838 6-16
US-838.2 6-16
US-838.3 6-16
US-838.4 6-16
US-838.5 6-16
US-838.6 6-16
US-838.7 6-16
US-838.8 6-16
US-838.9 6-16
US-838.10 6-16

Wedge
US-328 6-16
US-328.2 6-16
US-328.1 6-16
US-328.2 6-16
US-328.2 6-16
US-328.2 6-16
US-328.2 6-16
US-328.2 6-16

EMV gasketing material
UT-32.EMV 6-18
UT-33.3.EMV 6-18
UT-38.EMV 6-18
UT-42.EMV 6-18
UT-57A.EMV 6-18
UT-57B.EMV 6-18

Sealing profiles from UR group meets norm EN 45545-2
UR-4.4.01 6-19
UR-4.9.01 6-19
UR-8.2 6-19
UR-8.8 6-19
UR-8.9 6-20
UR-8.10 6-20
UR-8.11 6-20
UR-8.12 6-20
UR-32 6-21
UR-33.2 6-21
UR-38 6-21
UR-43.3 6-22
UR-43.5 6-22
UR-43.6 6-22
UR-57A 6-21
UR-80.5 6-22
UR-81.3 6-22

Sealing profiles according to VDI 6022
UT-8.2.VDI 6-23
UT-27.VDI 6-23
UT-32.VDI 6-23
UT-42.VDI 6-23
UT-57A.VDI 6-23

[7] CUSTOM PRODUCTS

Custom products ..... 7-1 to 7-6

GROUP RST

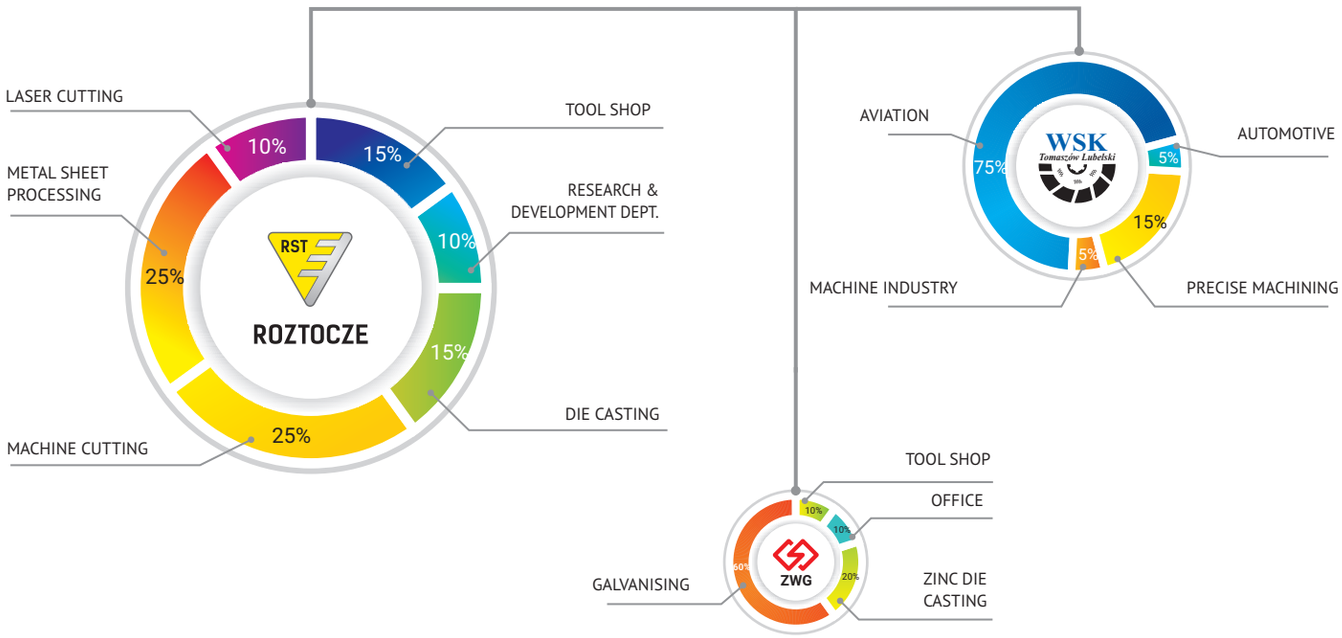

DISTRIBUTORS

ROZTOCZE

- BELARUS
  MS Techno pro
  Phone +375 29 651-63-70
  mssm@tut.by
- BELGIUM, LUXEMBOURG
  Mparts BV
  Phone +32 (0) 3 232 3795
  sales@mparts.be
- THE NETHERLANDS
  Mparts BV
  Phone +31 (0) 252 433 733
  sales@mparts.nl
- CZECH REPUBLIC
  Lidokov, výrobní družstvo
  Phone +420 516 452 341
  info@lidokov.cz
- FINLAND
  MOREK Oy
  Phone +358 40 7708030
  reima@morek.fi
- FRANCE, SWITZERLAND
  EPCI Engineering
  Phone +33 (0)1 34 48 34 10
  info@epcifrance.com
- ITALY
  Trebi Srl
  Phone +39 0444 497000
  info@3bisrl.it
- SPAIN
  FIXOR SL
  Phone +34 93 710 41 60
  info@fixor.es
- LITHUANIA, LATVIA, ESTONIA
  UAB JVS IDEA
  Phone +370 69377989
  tdu@techpart.lt
- RUSSIA
  RST, LLC
  Phone +7 (4012) 611-346
  info@rst.ooo
- UKRAINE
  PP MARKA
  Phone +38 (091) 305-0990
  ppmarka@ukr.net
- GREAT BRITAIN, NORWAY, SWEDEN, HUNGARY, USA
  TR Fastenings
  Phone +44 1825 747460
  sales@trfastenings.com

ROZTOCZE

ROZTOCZE Z.U.P. Roman Rak
22-600 Tomaszów Lubelski, Poland
ul. Zamojska 42A
Tel. +48 84 664 35 02

rst@roztocze.eu
www.roztocze.eu

FAMILY BUSINESS

X-ON Electronics

Largest Supplier of Electrical and Electronic Components

Click to view similar products for Latches ***category:***

Click to view products by Roztocze ***manufacturer:***

Other Similar products are found below :

ML4875CS-5 401639B 716165RB 74F373DW 74LVC373ADTR2G 74LVC573ADTR2G NL17SG373DFT2G NLV14044BDG 5962-8863901RA 5962-88639012A NLV14042BDR2G GN 115-VDE-16 74HC573D,653 74AHC573PW,118 2.L18.001-21 2.PM18.002-18 2.PM18.006-18 2.T18.001-21 2.T18.002-18 2.T18.006-18 CQ/AA-KEY CQ/A-M22X1,5-45-28 CQ/A-M22X1,5-45-32 M22-2-D5-2-21-01-P CY74FCT2373CTSOC 421283 MM74HC373WM MM74HC573WM 74LCX373MTC 74LVT16373MTDX 74VHC373MX KLD5.001-02 Z-0233-827-15 MIC58P01YV 74AHCT573D.112 74LCX16373MTDX CQ/A-M22X1,5-45-16 CQ/A-M22X1,5-45-18 CQ/A-M22X1,5-45-20 CQ/A-M22X1,5-45-24 CQ/A-M22X1,5-45-30 CQT/A-32-18 AE-V0 CQT/A-32 20-AE-V0 CY54FCT841ATDMB Z-2106-25001-22 2.904.005 2.904.006 2.904.008 2.KLB-D5.001PA-07 2.KLB-T9.001PA-07