The SKINDICHT® SVRN a metal cable gland in accordance to DIN 46320 for general use with hexagonal center section, which facilitates rapid assembly by means of a spanner.

Components:

Gland body	Brass, nickel-plated
Pressure screw	Brass, nickel-plated
Pressure washers	Steel, zinc-plated
Sealing ring	CR

Technical features:

Connecting thread	PG7 up to PG48 acc. to DIN 40430
Protection class	IP54 acc. to EN 60529
Temperature range	-20 °C up to +100 °C

Norm references:

CE

We reserve all rights according to DIN ISO 16016.
PD 0019/05_04.18EN

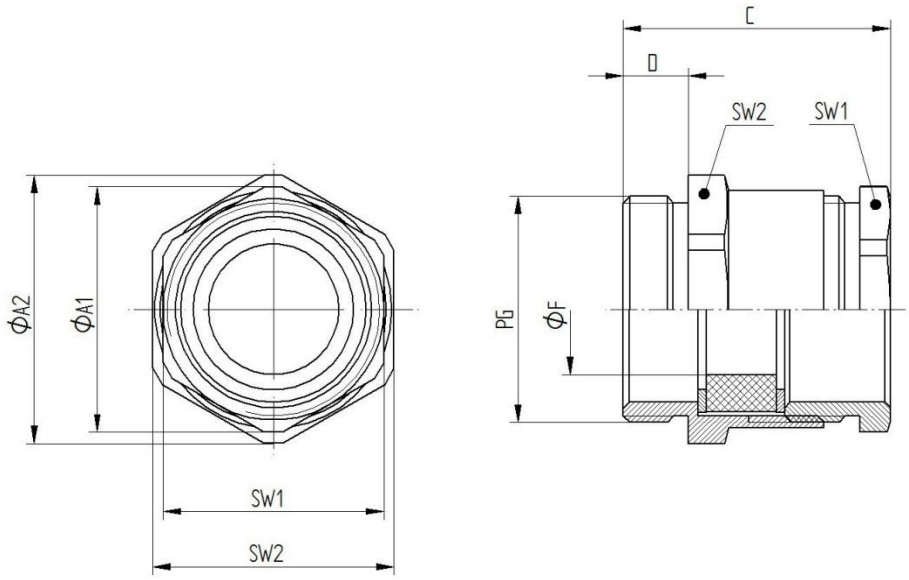

PG	SW1 [mm]	SW2 [mm]	Ø A1 [mm]	Ø A2 [mm]	C [mm]	D [mm]	Ø F [mm]	Article No.
PG7	13	14	14,3	15,5	20,6	5	5	52000210
PG7	13	14	14,3	15,5	20,6	5	6	52020300
PG7	13	14	14,3	15,5	20,6	5	7	52020310
PG9	15	17	16,6	18,9	22,6	5	7	52020320
PG9	15	17	16,6	18,9	22,6	5	8	52020330
PG9	15	17	16,6	18,9	22,6	5	9	52000220
PG11	18	20	20	22,2	23,6	6	10	52020341
PG11	18	20	20	22,2	23,6	6	11	52000230
PG13,5	20	22	22,2	24,4	25,6	6,5	11	52000240
PG13,5	20	22	22,2	24,4	25,6	6,5	12	52000241
PG16	22	24	24,4	26,7	26,6	6,5	13	52000250
PG16	22	24	24,4	26,7	26,6	6,5	14	52000251
PG21	28	30	31,2	33,5	29,6	7	18	52000260
PG29	37	40	41	43,5	32,6	8	27	52000270
PG36	47	50	50,5	54	38,6	9	34	52000280
PG42	54	57	59	61	43,6	10	40	52000290
PG48	60	64	65	69	45,6	10	44	52000300

For more information please see our current catalogue. Please do not hesitate to contact our laboratory if there are any questions regarding resistance against aggressive agents and special oil.

We reserve all rights according to DIN ISO 16016.
PD 0019/05_04.18EN

X-ON Electronics

Largest Supplier of Electrical and Electronic Components

Click to view similar products for Cable Glands, Strain Reliefs & Cord Grips ***category:***

Click to view products by Lapp Kabel ***manufacturer:***

Other Similar products are found below :

DBZM-6828 1498 1.587.3400.71 300623 CD21NS-01 5525 35882 M4340GAE NG-9516 Gasket 52006157 BM4963L 53629556 53629570 53629675 52025230 52015833 52024853 52103160 52115810 52115820 52115830 53017640 53017810 53019051 53019071 53019081 53019090 53019091 53019290 53111457 53111477 53112055 53112165 53112270 53112330 53112360 53112665 53112689 53112690 53112755 53112775 53112840 53112860 53112879 53112886 53112925 53112926 53119063 54110844 54110845