专利授权产品

REV.	ECN	DESCRIPTION	MDF'D	DATE
		新订图面		

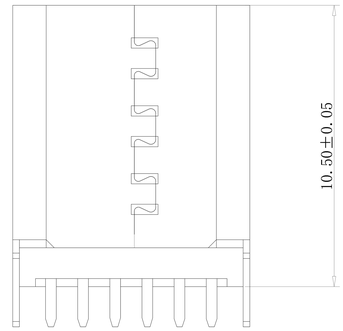

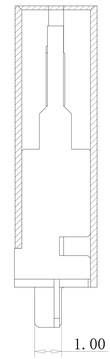

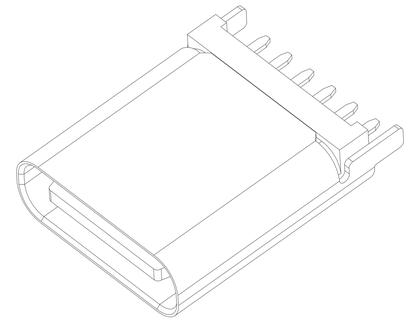

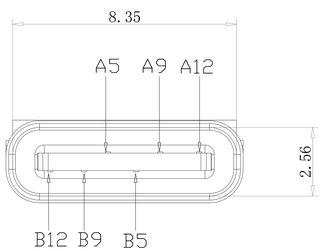

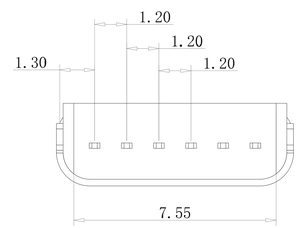

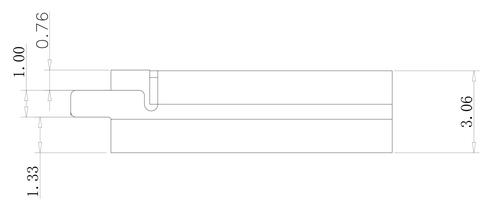

备注(NOTE):

1材质:

1.1胶芯：LCP UL94 V-0

1.2端子：C2680,T=0.2mm；镍底，镀金

1.3外壳：不锈钢201-H 表面镀镍

2.电气特性:

2.1.接触区：接触电阻40mΩ Max,允许10mΩ变化量. 测试条件:20mv，100mA下测量.

2.2.接触电流：3A VBUS引脚；1.25A用于GND引脚；其他引脚为0.25A.

2.3.额定电压：5V.

2.4.耐电电压：100VAC.

2.5.绝缘电阻：至少100兆欧 .

3.机械性能:

3.1.插入力：0.5-2.0Kg

3.2.拔出力：0.6-2.04Kg

3.3.插拔次数：5000次.

4.工作环境：-20℃ to +85℃.

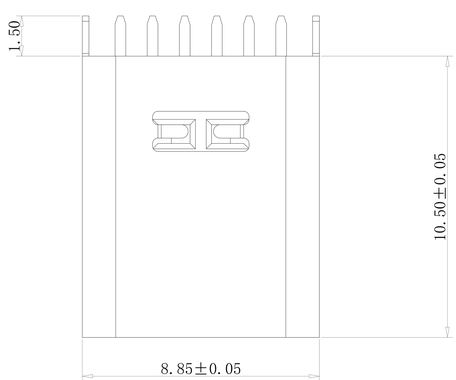

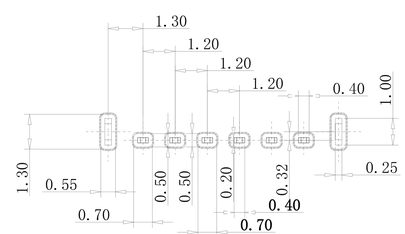

RECOMMEND P.C.B LAYOUT(COMPONENT SIDE)

TOLERANCE FOR PCB LAYOUT IS ±0.05

USB TYPE C PIN ASSIGNMENTS

PIN NUMBER	SIGNAL NAME	PIN NUMBER	SIGNAL NAME
		B12	GND
		B9	VBUS
A5	CC1		
		B5	CC2
A9	VBUS		
A12	GND		

TABLE:

NO	PART	Q'TY	Material
1	SHELL	1	ZINC ALLOY,NI30u"Min PLATED
2	CONTACT	6	C2680,TIN80u"/Au1u"/NI30u" PLATED
3	IMD HOUSING	1	LCP UL94 V-0 BLACK
4	CAP	1	LCP UL94 V-0 BLACK
5	WATERPROOF RING	1	SILICONE UL94 V-0 BLACK

深圳市金航标电子有限公司	www.kinghelm.com.cn	页码(SHEET)	1
KH-TYPE-C-L10.5-6P	0755-28190160	版本(REV)	A1
品名(ITEM NO)	TYPE-C6P直插10.5 1.5脚	日期(DATE)	2022.9.14
料号(PART NO)		设计(DESIGN)	M
图号(DWG NO)	A1	审核(CHECKED)	
		核准(APPROVED)	

单位(UNIT)：MM

比例(SCALE) 1:1

未注公差 TOLERANCE UNSPECIFIED

X.X	±0.20
X.XX	±0.15
X.XXX	±0.10
X°	±5°
X.X°	±2°

X-ON Electronics

Largest Supplier of Electrical and Electronic Components

Click to view similar products for USB Connectors ***category:***

Click to view products by Kinghelm ***manufacturer:***

Other Similar products are found below :

950 MUSBD11135 17-200721 217450-1 KMBVX-TH-5S-B30 KUSBX-AS2N-W KUSBX-SMT2AP1S-W30 935 957 30-498-6 SK-60A-2 1734082-1 30-470 30-489 30-541 A-USB A-2P-C MIKROE-1451 USBFTVSCCG 1-1734084-2 10135326-001LF 4198 USB-A-D-VT USB-A-S-RA-TSMT 1310-1023-02 690-024-633-031 UB-20PMFP-LC7001 17-200011 UB-20AFMM-LL7A01 1040870124 CAP-WCCMLPB1 CAP-WCCMLPC1 2274475-3 UB-20BMFA-SL8001 914-614A2025S10200 USB3FTV7SAGF059 ZX40-B-5S-1500-STDA(30) GSB3116344HR USB3FTV2SAZNF459 USB3FTV7SAZNF459 U221-041N-1WVS62-F5D HYCW153-USBD05-500B HYCW219-USBD05-075B HYCW148-USBD05-117B HYCW149-USBD05-740B HYCW204-USBD05-108B HYCW214-USBA04-113B HYCW213-USBA04-113B UB-20AMFM-SL7A01 KMMX-BSMT35S-1-B30TR 2345986-1