Kingbright

Kingbright Electronic Europe GmbH

Low Current SMD LED

- Compact sizes including 0402, 0603, 0805, 1206 and many other options
- Different viewing angles vary from 10° to 140° for design requirements
- Chip type, PLCC, and subminiature options
- Robust and high reliability with competitive lead time
- Available in various colour selections: blue, green, yellow, orange, red and bi-colour
- Mounting options include top-mount and right angle
- Flexible colour combinations in bi-colour combinations available upon request

LOW CURRENT SMD LED

Part Number	Material	λD (nm)	Lens Type	Iv (mcd) @2mA		Viewing Angle	Dimensions
				Min.	Typ.	2θ1/2	
KPHHS-1005LVSECK-J3-PF	AlGaInP	625	Water Clear	15	35	120°	1.0mm x 0.5mm x 0.5mm (0402) 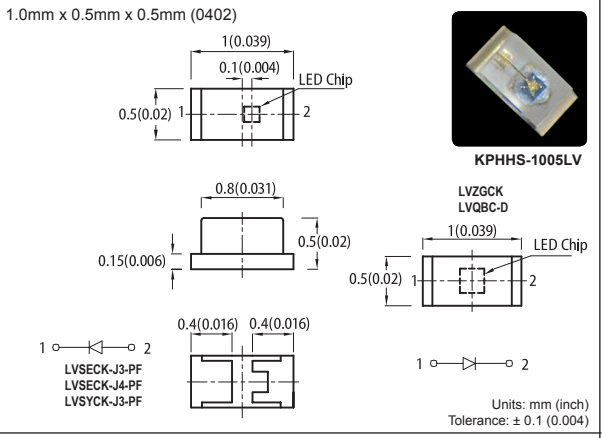
KPHHS-1005LVSECK-J4-PF	AlGaInP	605	Water Clear	20	40	120°	
KPHHS-1005LVSYCK-J3-PF	AlGaInP	590	Water Clear	10	20	120°	
KPHHS-1005LVCGCK	AlGaInP	570	Water Clear	1.2	3.5	120°	
KPHHS-1005LVZGCK	InGaN	525	Water Clear	20	40	140°	
KPHHS-1005LVQBC-D	InGaN	465	Water Clear	6	15	140°	
KPHD-1608LVSURCK	AlGaInP	630	Water Clear	4	15	100°	1.6mm x 0.8mm x 0.65mm (0603) 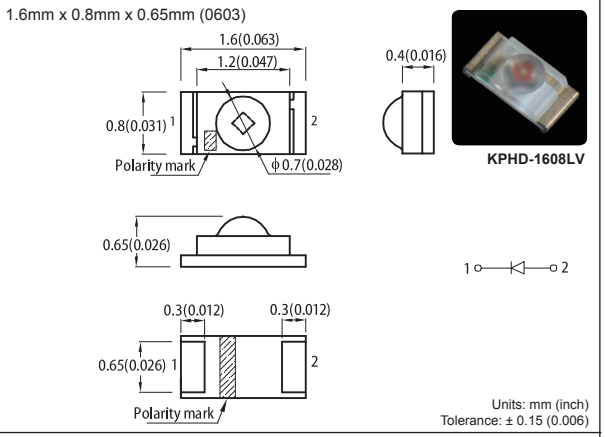
KPHD-1608LVSYCK	AlGaInP	590	Water Clear	4	20	100°	
KPHD-1608LVCGCK	AlGaInP	570	Water Clear	2	8	100°	
KPHD-1608LVZGCK	InGaN	525	Water Clear	50	180	100°	
KPHD-1608LVVBC-D	InGaN	470	Water Clear	15	45	100°	
KPHD-1608LVQBC-D	InGaN	465	Water Clear	10	25	100°	
KPT-1608LVSECK-J3-PRV	AlGaInP	625	Water Clear	20	40	120°	1.6mm x 0.8mm x 0.75mm (0603) 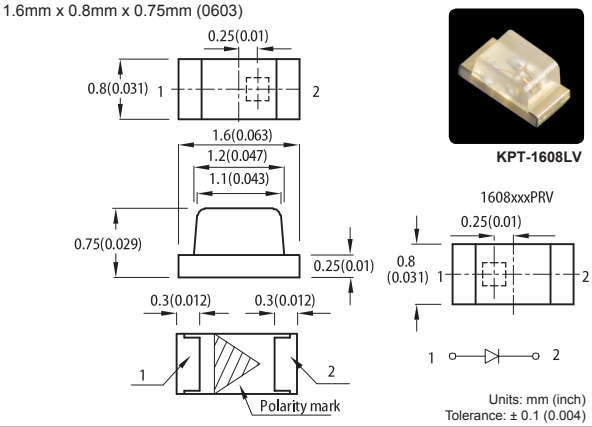
KPT-1608LVSECK-J4-PRV	AlGaInP	605	Water Clear	30	50	120°	
KPT-1608LVSYCK-J3-PRV	AlGaInP	590	Water Clear	15	25	120°	
KPT-1608LVZGCK	InGaN	525	Water Clear	50	100	130°	
KPT-1608-LVVBC-D	InGaN	470	Water Clear	15	24	130°	
KPTD-1608LVSECK-J3-PF	AlGaInP	625	Water Clear	20	50	60°	1.6mm x 0.8mm x 0.95mm (0603 Dome Lens) 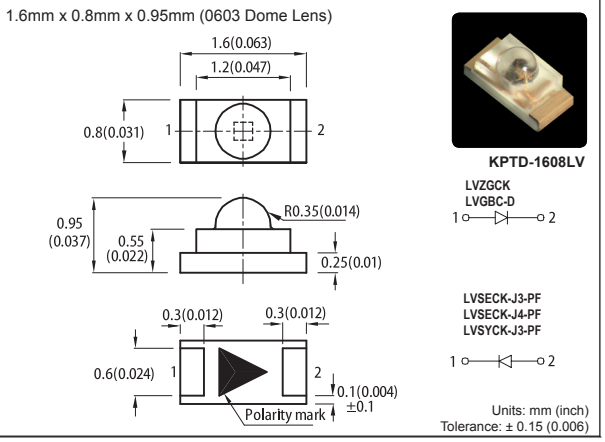
KPTD-1608LVSECK-J4-PF	AlGaInP	605	Water Clear	80	150	60°	
KPTD-1608LVSYCK-J3-PF	AlGaInP	590	Water Clear	30	55	60°	
KPTD-1608LVZGCK	InGaN	525	Water Clear	120	220	60°	
KPTD-1608LVVBC-D	InGaN	470	Water Clear	30	65	40°	

LOW CURRENT SMD LED

Part Number	Material	λD (nm)	Lens Type	Iv (mcd) @2mA		Viewing Angle	Dimensions
				Min.	Typ.	2θ1/2	
KPT-2012LVSECK-J3-PRV	AlGaInP	625	Water Clear	20	40	140°	2.0mm x 1.25mm x 0.75mm (0805) 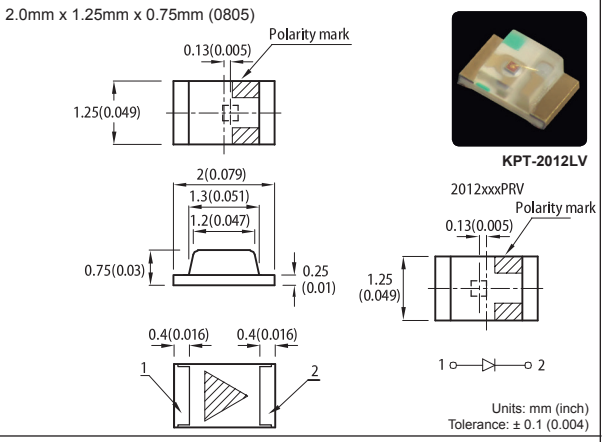
KPT-2012LVSECK-J4-PRV	AlGaInP	605	Water Clear	30	50	140°	
KPT-2012LVSYCK-J3-PRV	AlGaInP	590	Water Clear	15	25	140°	
KPT-2012LVZGCK	InGaN	525	Water Clear	20	50	140°	
KPT-2012LVVBC-D	InGaN	470	Water Clear	15	24	140°	
KPTD-2012LVSURCK	AlGaInP	630	Water Clear	20	50	40°	2.0mm x 1.25mm x 1.05mm (0805) 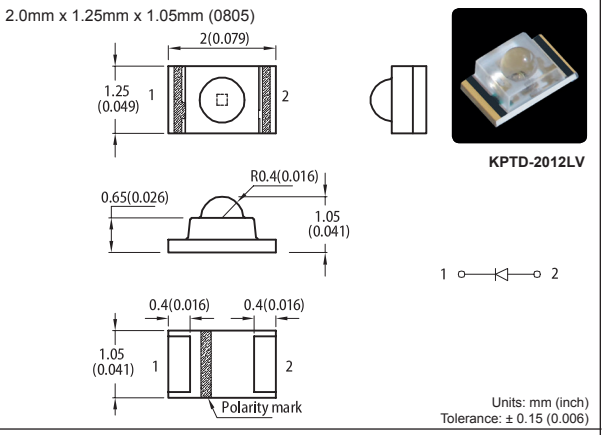
KPTD-2012LVSYCK	AlGaInP	590	Water Clear	30	90	40°	
KPTD-2012LVCGCK	AlGaInP	570	Water Clear	20	40	40°	
KPTD-2012LVZGCK	InGaN	525	Water Clear	180	440	40°	
KPTD-2012LVVBC-D	InGaN	470	Water Clear	30	90	30°	
KPTD-2012LVQBC-D	InGaN	465	Water Clear	20	50	30°	
KPA-2107LVSECK-J3-PRV	AlGaInP	625	Water Clear	15	30	140°	2.1mm x 1.0mm x 0.6mm (Right Angle) 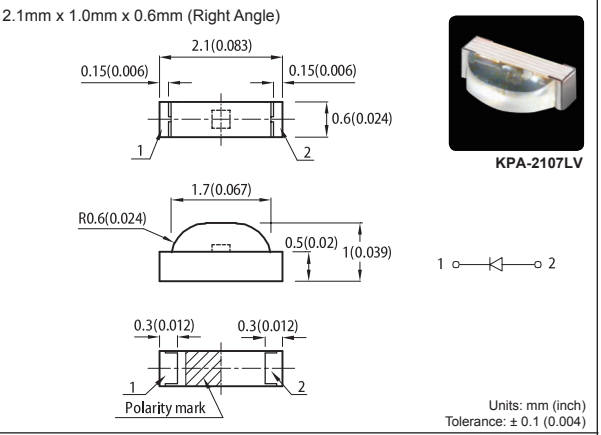
KPA-2107LVSECK-J4-PRV	AlGaInP	605	Water Clear	20	40	140°	
KPA-2107LVSYCK-J3-PRV	AlGaInP	590	Water Clear	15	30	140°	
KPA-2107LVZGCK	InGaN	525	Water Clear	20	40	170°	
KPA-2107LVVBC-D	InGaN	470	Water Clear	10	20	170°	
KA-3021LVSESK-J3-TR	AlGaInP	625	Water Clear	20	45	120°	3.0mm x 2.0mm x 1.3mm 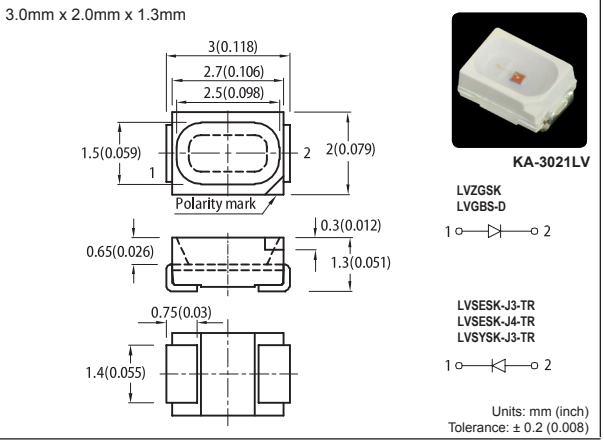
KA-3021LVSESK-J4-TR	AlGaInP	605	Water Clear	30	60	120°	
KA-3021LVSYSK-J3-TR	AlGaInP	590	Water Clear	20	45	120°	
KA-3021LVZGSK	InGaN	525	Water Clear	80	180	120°	
KA-3021LVVBS-D	InGaN	470	Water Clear	20	50	120°	

LOW CURRENT SMD LED

Part Number	Material	λD (nm)	Lens Type	Iv (mcd) @2mA		Viewing Angle	Dimensions
				Min.	Typ.	2θ1/2	
KPDA-3020LVSECK-J3-PF	AlGaInP	625	Water Clear	250	500	10°	3.0mm x 2.8mm x 2.0mm (Right Angle)
KPDA-3020LVSECK-J4-PF	AlGaInP	605	Water Clear	550	1000	10°	
KPDA-3020LVSYCK-J3-PF	AlGaInP	590	Water Clear	180	500	10°	
KPDA-3020LVZGCK	InGaN	525	Water Clear	250	600	10°	
KPDA-3020LVVBC-D	InGaN	470	Water Clear	80	150	10°	
KPT-3216LVSECK-J3-PRV	AlGaInP	625	Water Clear	20	40	140°	3.2mm x 1.6mm x 0.75mm (1206)
KPT-3216LVSECK-J4-PRV	AlGaInP	605	Water Clear	30	50	140°	
KPT-3216LVSYCK-J3-PRV	AlGaInP	590	Water Clear	15	25	140°	
KPT-3216LVZGCK	InGaN	525	Water Clear	20	50	150°	
KPT-3216LVVBC-D	InGaN	470	Water Clear	15	24	150°	
KPTD-3216LVSURCK	AlGaInP	630	Water Clear	20	50	40°	3.2mm x 1.6mm x 1.8mm (1206 Dome Lens)
KPTD-3216LVSYCK	AlGaInP	590	Water Clear	18	40	40°	
KPTD-3216LVCGCK	AlGaInP	570	Water Clear	15	25	40°	
KPTD-3216LVZGCK	InGaN	525	Water Clear	180	290	30°	
KPTD-3216LVVBC-D	InGaN	470	Water Clear	50	120	30°	
KPTD-3216LVQBC-D	InGaN	465	Water Clear	40	100	30°	
KA-3528LVSECKT-J3	AlGaInP	625	Water Clear	30	50	120°	3.5mm x 2.8mm x 1.9mm
KA-3528LVSECKT-J4	AlGaInP	605	Water Clear	30	60	120°	
KA-3528LVSYCKT-J3	AlGaInP	590	Water Clear	20	30	120°	
KA-3528LVZGCKT	InGaN	525	Water Clear	50	90	120°	
KA-3528LVVBS-D	InGaN	470	Water Clear	30	45	120°	

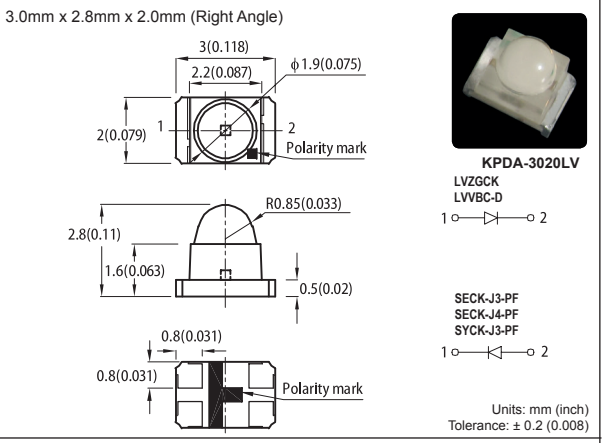

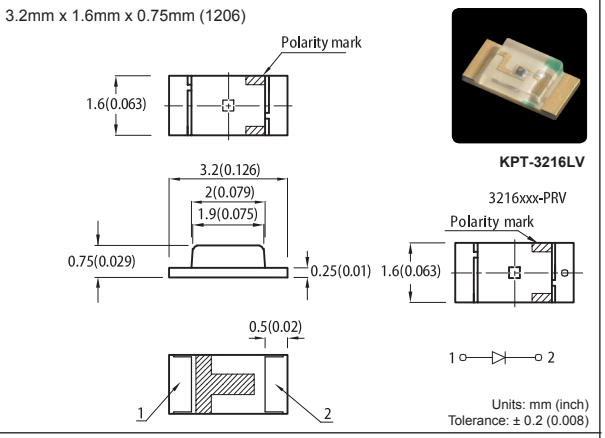

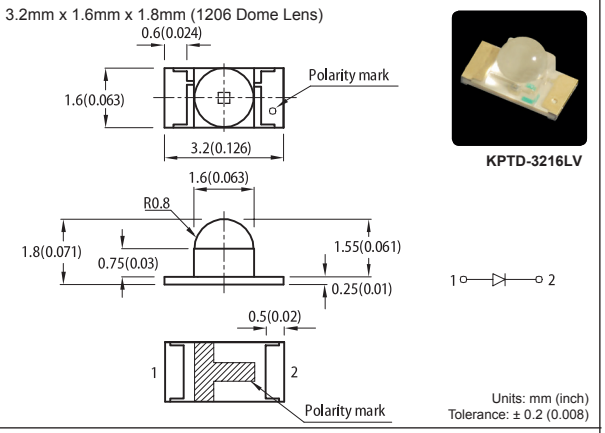

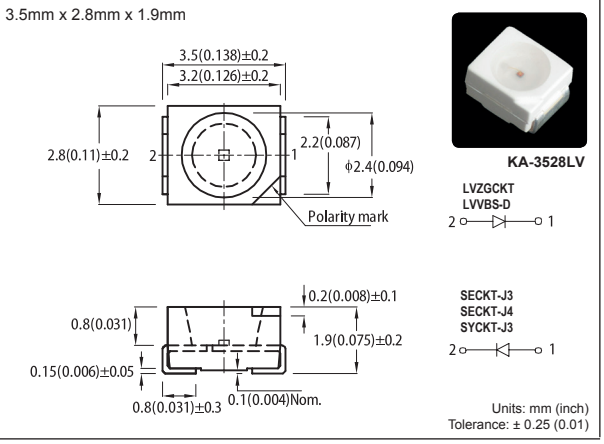

LOW CURRENT SMD LED

Part Number	Material	λD (nm)	Lens Type	Iv (mcd) @2mA Min.	Iv (mcd) @2mA Typ.	Viewing Angle 2θ1/2	Dimensions
KPHB-1608LVCGKSURKC	AlGaInP	570	Water Clear	1.2	3	130°	1.6mm x 0.8mm x 0.5mm (0603 Bi-Color)
	AlGaInP	630		2	8		
KPHB-1608LVZGKSURKC	InGaN	525	Water Clear	20	40	130°	
	AlGaInP	630		2	8		
Other colour combinations are available upon request!							
KPTB-1612LVSURKCGKC	AlGaInP	630	Water Clear	4	9	150°	1.6mm x 1.25mm x 0.65mm (Bi-Color)
	AlGaInP	570		1.2	3		
KPTB-1612LVSURKZGKC	AlGaInP	630	Water Clear	4	9	150°	
	InGaN	525		30	50		
Other colour combinations are available upon request!							
KPHBM-2012LVSURKCGKC	AlGaInP	630	Water Clear	2	10	120°	2.0mm x 1.25mm x 0.45mm (0805 Super Thin, Bi-Color)
	AlGaInP	570		1.2	2		
KPHBM-2012LVSURKZGKC	AlGaInP	630	Water Clear	2	10	120°	
	InGaN	525		50	90		
Other colour combinations are available upon request!							

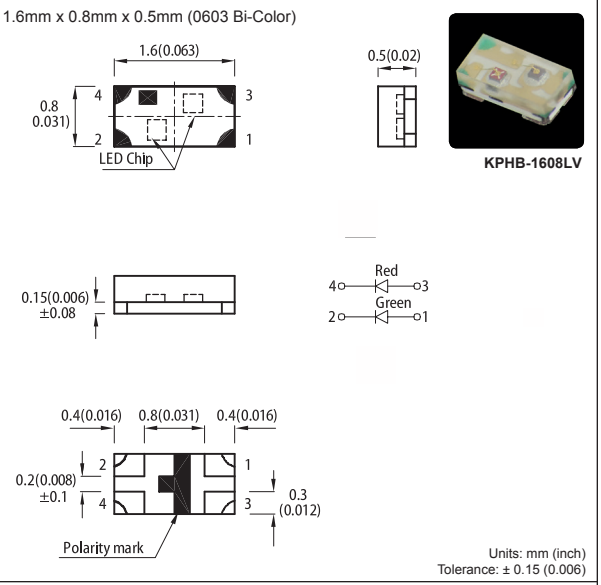

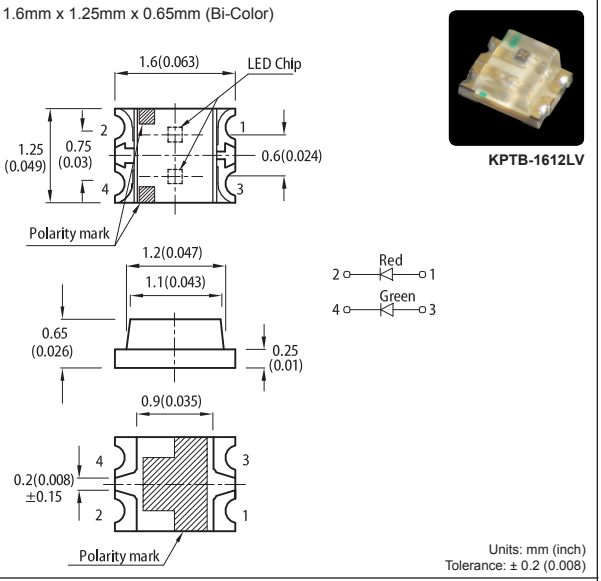

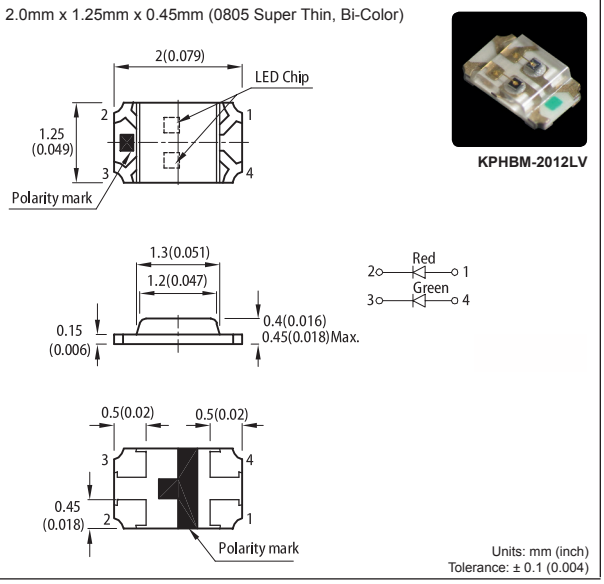

LOW CURRENT SMD LED

Part Number	Material	λD (nm)	Lens Type	Iv (mcd) @2mA		Viewing Angle
				Min.	Typ.	2θ1/2
KPBD-3224LVSURKCGKC	AlGaInP	630	Water Clear	10	30	20°
	AlGaInP	570		10	30	
KPBD-3224LVSURKZGKC	AlGaInP	630	Water Clear	10	30	20°
	InGaN	525		120	250	

Other colour combinations are available upon request!

Dimensions

3.2mm x 2.4mm x 2.4mm (Dome Lens)

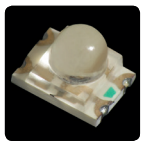

KPBD-3224LV

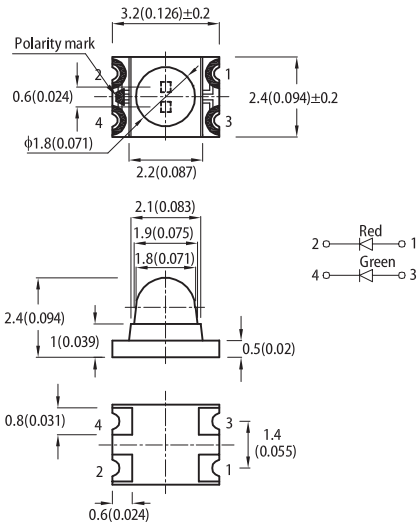

Units: mm (inch)
Tolerance: ± 0.1 (0.004)

0201 PACKAGE – THE SMALLEST SMD-LED PACKAGE!

KPG-0603 SERIES

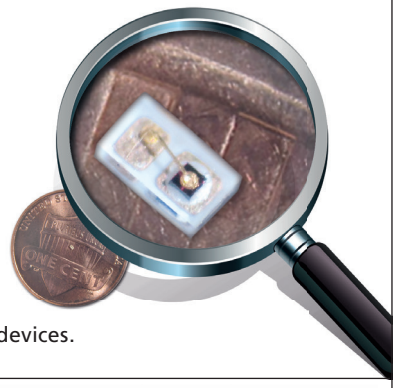

Features:
Dimensions: 0,65 mm x 0,35 mm x 0,2 mm
Wide viewing angle of 135° and 145°
High luminous intensity
Available colours = red, orange, green, yellow and blue

The 0201 package is suitable for mobile phones and portable electronic devices, digital cameras and camcorders, keyboards, loud speakers, head- and ear phones, microphones, hearing aids and medical devices. Especially for all applications in which the 0402 package is too large.

NEW SUPER-FLAT SMD-LED WITH 0,20 MM HEIGHT

KPG1-1608 SERIES

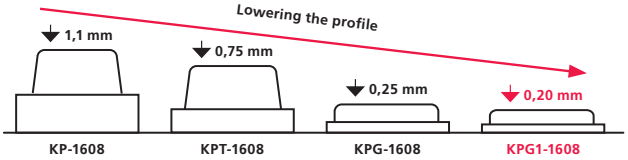

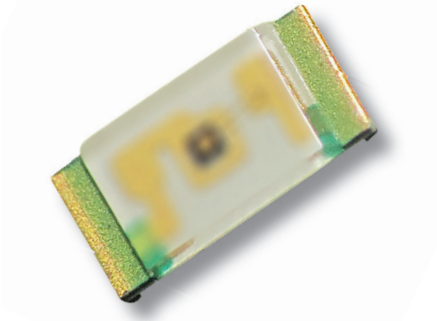

Features: Dimensions = 1,6 mm x 0,8 mm x 0,2 mm. Available in the colous red, orange, green, yellow and blue. Low power consumption

NEW DOME-LENS SMD-LED IN 0805 PACKAGE

KPTD-2012 SERIES

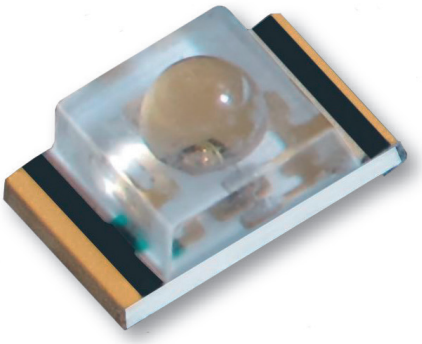

Features:
Dimensions = 2,0 mm x 1,25 mm, thickness = 1,05 mm
Available in the colours red, orange, green, yellow and blue

Applications:
Backlight, Status indicator, Home and smart appliances
Wearable and portable devices, Healthcare applications

X-ON Electronics

Largest Supplier of Electrical and Electronic Components

Click to view similar products for kingbright ***manufacturer:***

Other Similar products are found below :

BR-8.24 L-934EW/1GD AA4040PGS CC04-41SRWA PSA05-11GWA BC04-11SYKWA BC56-12EWA KB-2600ID L53YC13 SA40-19GWA CC56-21SRWA WP4060VH/2ID DC-05YWA KA-3535SELZ4S KB-2755SYKW SA56-11GWA DE2CGKD AA4040SF4S-P22 BR9.52 L-1384AL/1ID SA15-11PBWA-A KB-2855SGW BA56-11SYKWA ACSA03-41EWA-F01 L-59GYC WP7113SF4BT-P22 SA03-11PBWA/A SC40-19EWA DA03-11GWA L-934EB/2ID WP132WUM/EGW WP1503CB/GD WP1384AD/GD AA3528AVUACGSK L-964ID KPBD-3224SURKCGKC WP1533BQ/GD SA08-11SURKWA AM2520SYCK09 L-138A8QMP/1ID SA23-12EWA WP934MD/2ID KPHBM-2012ETSGTC KPTR-3216SGC WP4060VH/2GD PDC54-12SRWA WP53MGD DLC-6MBD SC18-11EWA SC40-18EWA