May.1.2024 Copyright 2024 HIROSE ELECTRIC CO., LTD. All Rights Reserved.
In case of consideration for using Automotive equipment / device which demand high reliability, kindly contact our sales window correspondents.

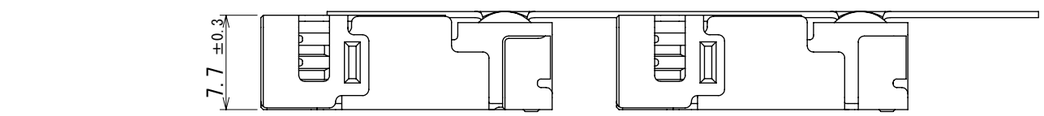


2 Style and Dimension of Reel

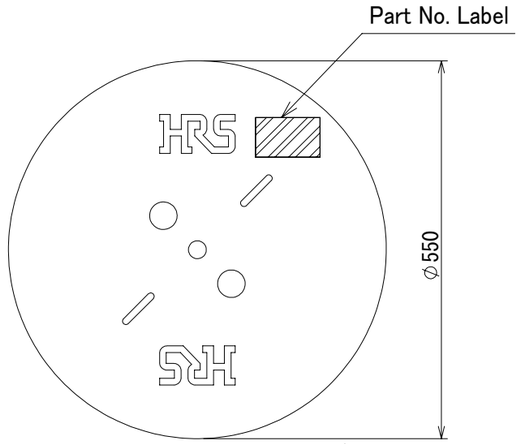


Detail of part No. Label

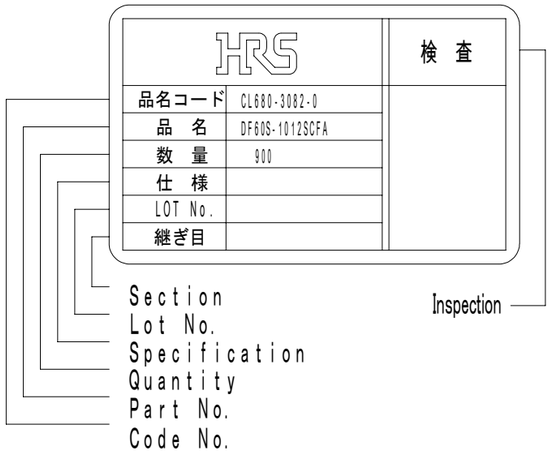


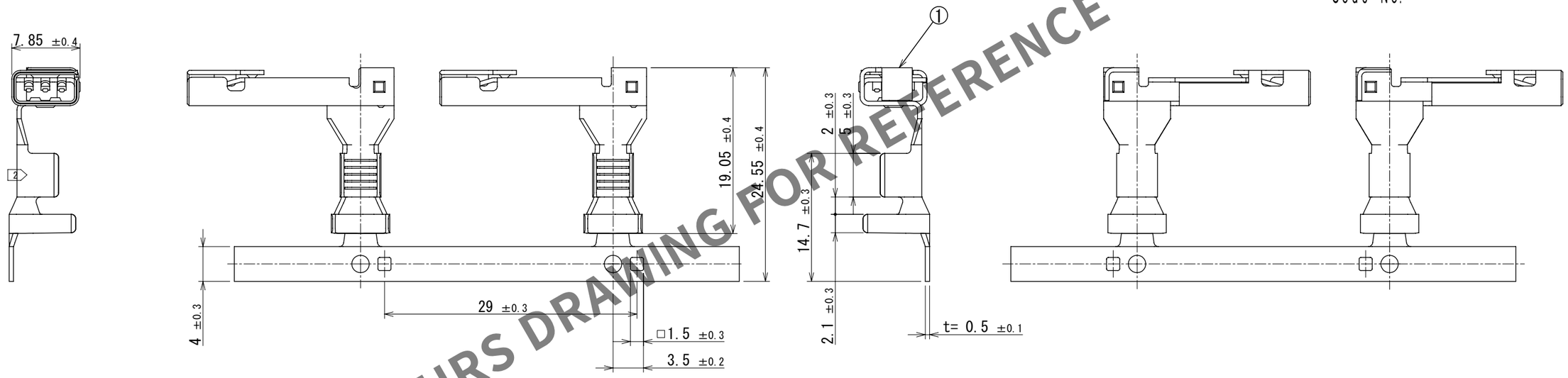


HRS DRAWING FOR REFERENCE

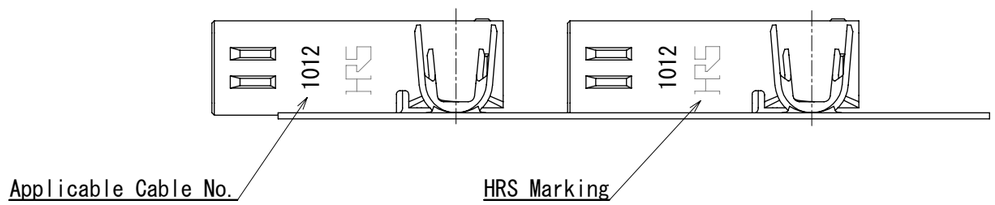


2 Note 1. 1RL:800 Contacts.
2 Style of reelshows in figure.
3. Please make sure to check ths form of crimping using a cable in adusting an applicator.
4. Applicable cable is 10-12 AWG.
5. Refer to the technical specification (ETAP-H0824-00) for the packing type.
6. Please refer to the technical specification (ETAD-H0654-00, ETAD-H0653-00, ETAD-H1042-00) for handling.

| NO. | MATERIAL | FINISH , REMARKS |
|---|---|---|
| 1 | Copper alloy | Contact area : Au plating 0.2μm min<br>Wire barrel area : Sn plating 1 μm min<br>Under plating : Ni plating 1 μm min |

| UNITS | SCALE | | COUNT | DESCRIPTION OF REVISIONS | DESIGNED | CHECKED | DATE |
|---|---|---|---|---|---|---|---|
| mm | 2:1 | 2 | 1 | DIS-H-00019416 | KT.NUMATA | TT.OHSAKO | 2023.11.01 |

HRS HIROSE ELECTRIC CO.,LTD.

| | | | | |
|---|---|---|---|---|
| APPROVED | : SJ.OKAMURA | 2023.10.19 | DRAWING NO. | EDC-402623-00-00 |
| CHECKED | : TT.OHSAKO | 2023.10.19 | PART NO. | DF60S-1012SCFA |
| DESIGNED | : KT.NUMATA | 2023.10.18 | CODE NO. | CL0680-3082-0-00 |
| DRAWN | : SK.CHIBA | 2023.10.18 | | 2 1/1 |

## X-ON Electronics

Largest Supplier of Electrical and Electronic Components

***Click to view similar products for*** Terminals ***category:***

***Click to view products by*** Hirose ***manufacturer:***

Other Similar products are found below :

00-054007-01074-6 00-054007-70206-1 00-054007-70210-8 00-054007-70217-7 00-054007-70228-3 00-054007-70256-6 00-054007-70316-7 00-054007-49560-4 00-054007-70209-2 00-054007-70231-3 00-054007-70241-2 00-054007-70242-9 00-054007-70246-7 00-054007-70263-4 00-054007-70288-7 00-054007-70290-0 00-054007-70300-6 00-054007-70304-4 01-2900-1-04412 0190160084 0190350008 600TS-10 605601-1 60617-1-C 61314-6-C 626-0194 63-S M55155/079C01 M55155/099B03 M55155/109H01 M55155/12XH05 M55155/29XJ08 M55155/30-6S M55155/30-9S M55155/30XI09 M6-14RSX 696861-1 696999-1 M86700006 D18-110B-C D18-110B-M 701-1936 701-1955 701-2003 701-2007 701-2013 701-2018 701-2069 701-2077-60 701-2315