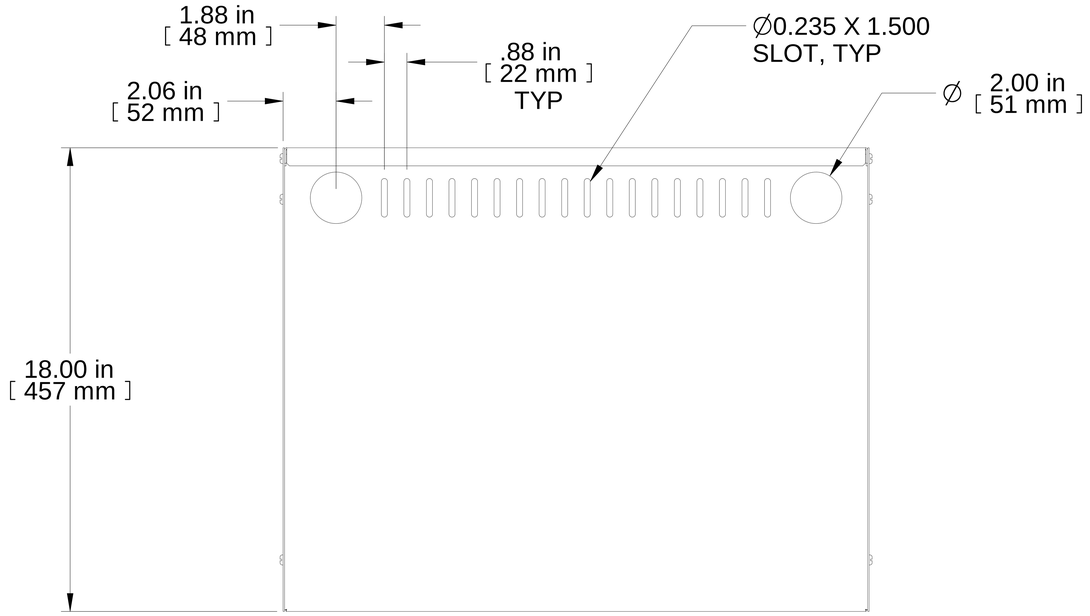

TOP VIEW

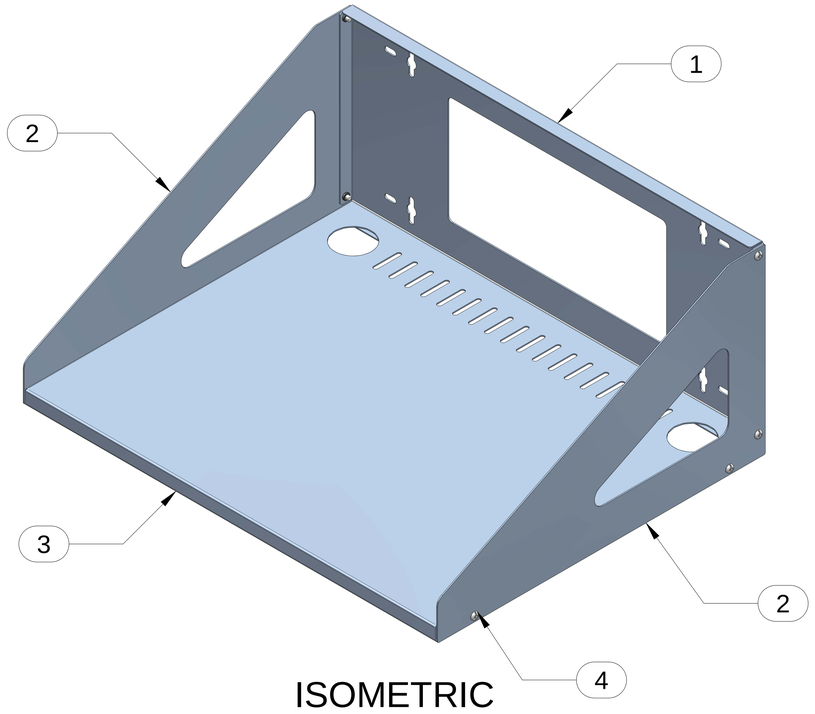

ISOMETRIC

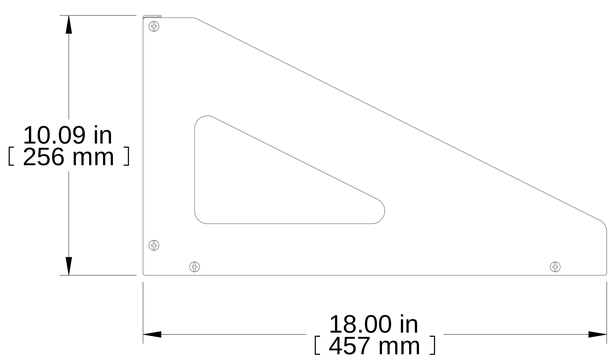

L.S. VIEW

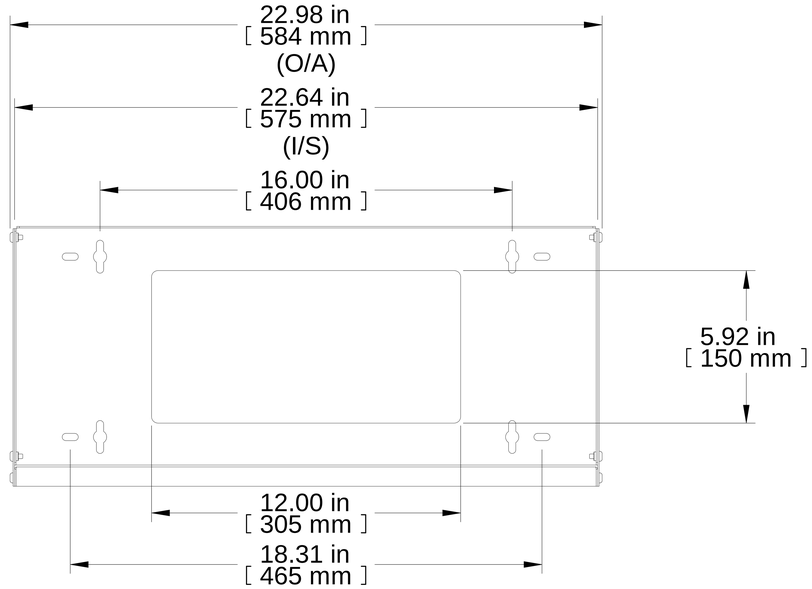

FRONT VIEW

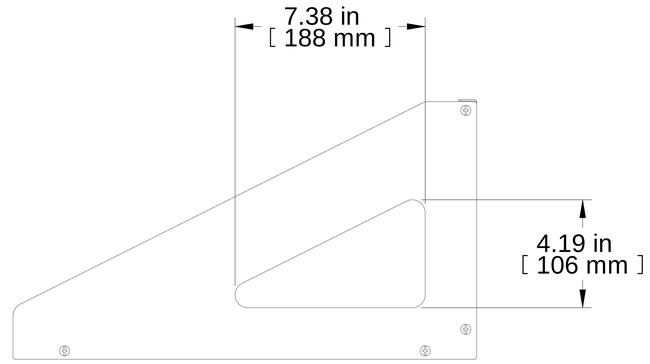

R.S. VIEW

BOTTOM VIEW

Item Number	Title	Quantity
1	WMD REAR PANEL	1
2	WMD SIDE BRKT	2
3	WMD SHELF	1
4	SCREW 10-32 X 3/8 BDHD SLZP	8

PART NUMBERS

WMD18LG	PAINTED LIGHT GREY TEXT.

NOTES

Mounting Hardware Not Included

See Hammond Website for Additional Accessories

Français

Pour tous les détails sur nos produits,
svp veuillez consulter notre site www.hammondmfg.com

Data subject to change without notice. Isometric drawing not to scale.
Les données sont sujettes à changement sans préavis.

HAMMOND MANUFACTURING®

www.hammondmfg.com

PART NO. **WMD18LG**

X-ON Electronics

Largest Supplier of Electrical and Electronic Components

Click to view similar products for Racks & Rack Cabinet Accessories ***category:***

Click to view products by Hammond ***manufacturer:***

Other Similar products are found below :

HTS10 A48P36G CM05 TS170 DP-3U 5261304-07 CG3-160G AEG-4000G AEG-3000G SR3-41 29478 SC11-1 M6124-4007-A-24 HD138 1CP108A AC68BRAC3 AEG-3000B AEG-4000B AEG-5000B AEG-5000G 02100.0-00 RM632SCPG-8 8074-632-A FLEX-PLATE1UR 244422 264091 AEG-2000G 1CM104A CFS-1.50/3.00 7198 CC-2 CCK60-84-00 92100117-01 HD7-2 CG3-K02/25 TS204 1404-0016-12 HD105 8361-1032-ss 8385-1032-A-22 SC02MFA-SS m6261-6010-ss 8115-632-ss 8221-2520-a-24 8019-256-a TBV17-12-Semi-gloss BlackPAIR SS350-14-Black TexturedPAIR UPS 7-5-5-Blue/White UPR 350-17-7 Plain UPS 7-14-9-Blue/White