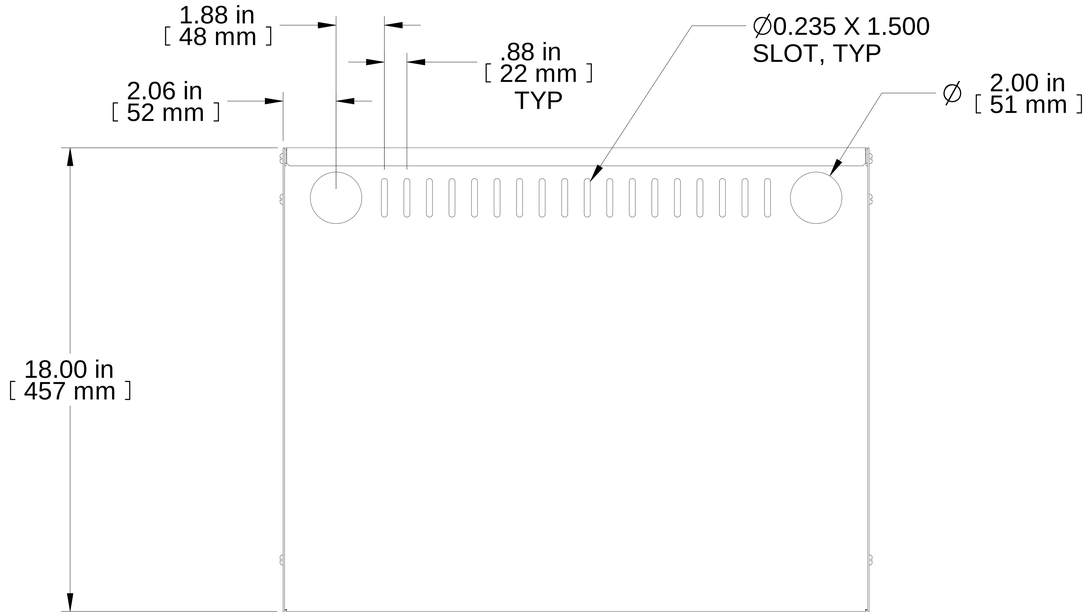


TOP VIEW

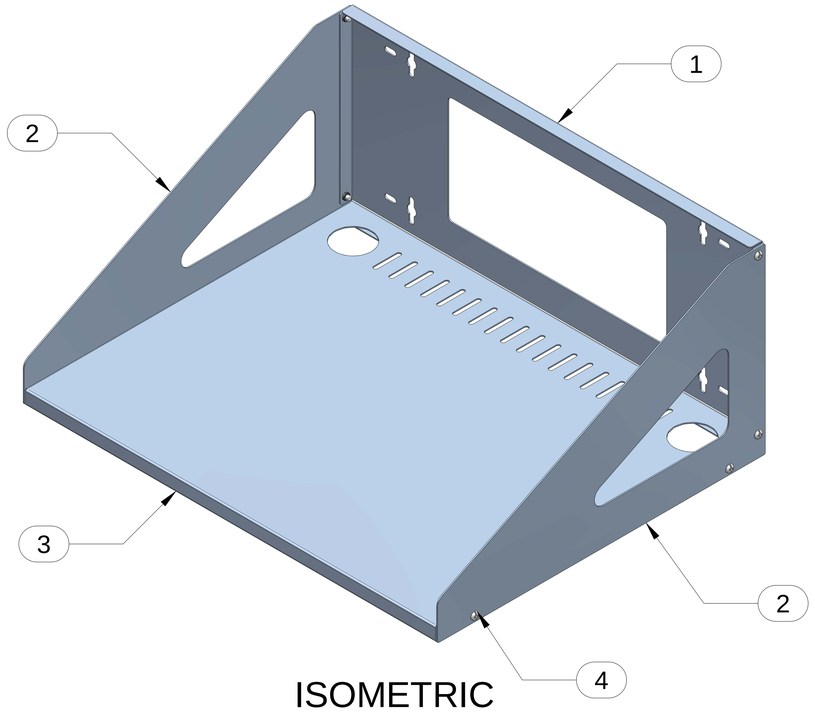


ISOMETRIC

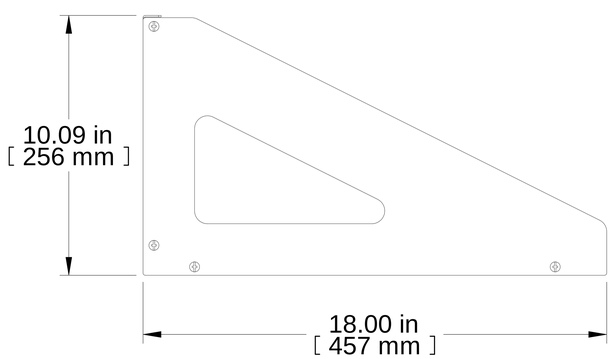


L.S. VIEW

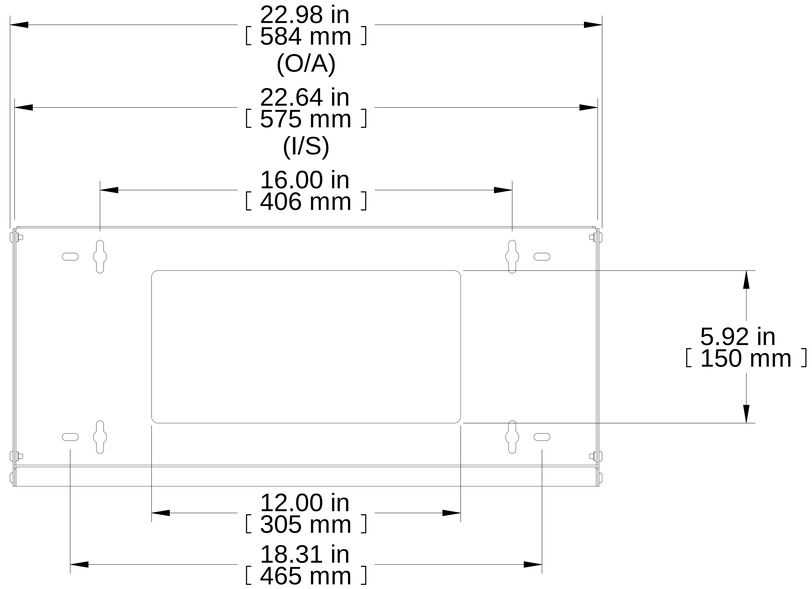


FRONT VIEW

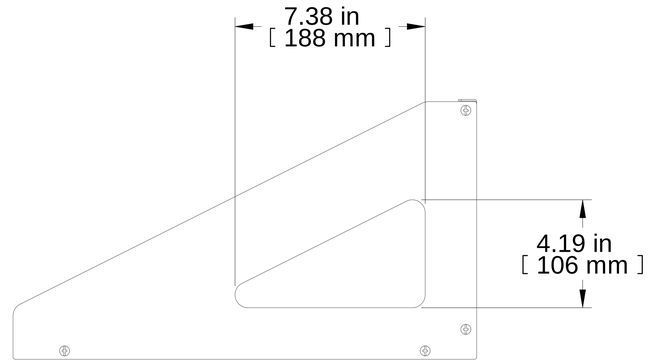


R.S. VIEW

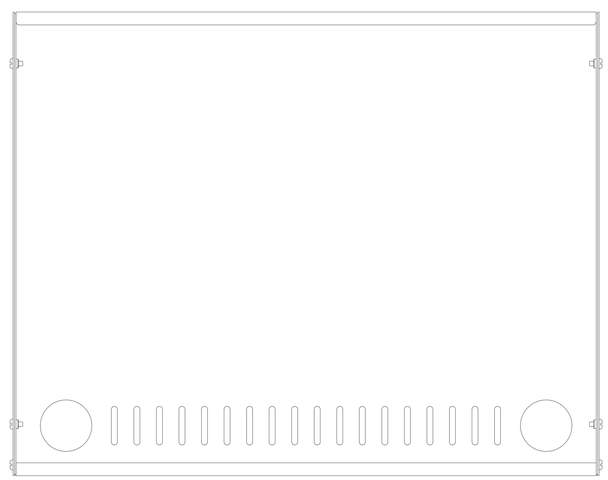

BOTTOM VIEW

| Item Number | Title | Quantity |
|---|---|---|
| 1 | WMD REAR PANEL | 1 |
| 2 | WMD SIDE BRKT | 2 |
| 3 | WMD SHELF | 1 |
| 4 | SCREW 10-32 X 3/8 BDHD SLZP | 8 |

**PART NUMBERS**

| | |
|---|---|
| WMD18BK | PAINTED BLACK TEXTURED |

**NOTES**

Mounting Hardware Not Included

See Hammond Website for Additional Accessories

**Français**

Pour tous les détails sur nos produits,
svp veuillez consulter notre site www.hammondmfg.com

Data subject to change without notice. Isometric drawing not to scale.
Les données sont sujettes à changement sans préavis.

HAMMOND MANUFACTURING®

www.hammondmfg.com

**PART NO.** **WMD18BK**

# X-ON Electronics

Largest Supplier of Electrical and Electronic Components

***Click to view similar products for*** Racks & Rack Cabinet Accessories ***category:***

***Click to view products by*** Hammond ***manufacturer:***

Other Similar products are found below :

HTS10 A48P36G CM05 TS170 DP-3U 5261304-07 CG3-160G AEG-4000G AEG-3000G SR3-41 29478 SC11-1 M6124-4007-A-24 HD138 1CP108A AC68BRAC3 AEG-3000B AEG-4000B AEG-5000B AEG-5000G 02100.0-00 RM632SCPG-8 8074-632-A FLEX-PLATE1UR 244422 264091 AEG-2000G 1CM104A CFS-1.50/3.00 7198 CC-2 CCK60-84-00 92100117-01 HD7-2 CG3-K02/25 TS204 1404-0016-12 HD105 8361-1032-ss 8385-1032-A-22 SC02MFA-SS m6261-6010-ss 8115-632-ss 8221-2520-a-24 8019-256-a TBV17-12-Semi-gloss BlackPAIR SS350-14-Black TexturedPAIR UPS 7-5-5-Blue/White UPR 350-17-7 Plain UPS 7-14-9-Blue/White