# 慈溪市科发电子有限公司
# CIXI KEFA ELECTRONICS CO.,LTD.

产品规格书

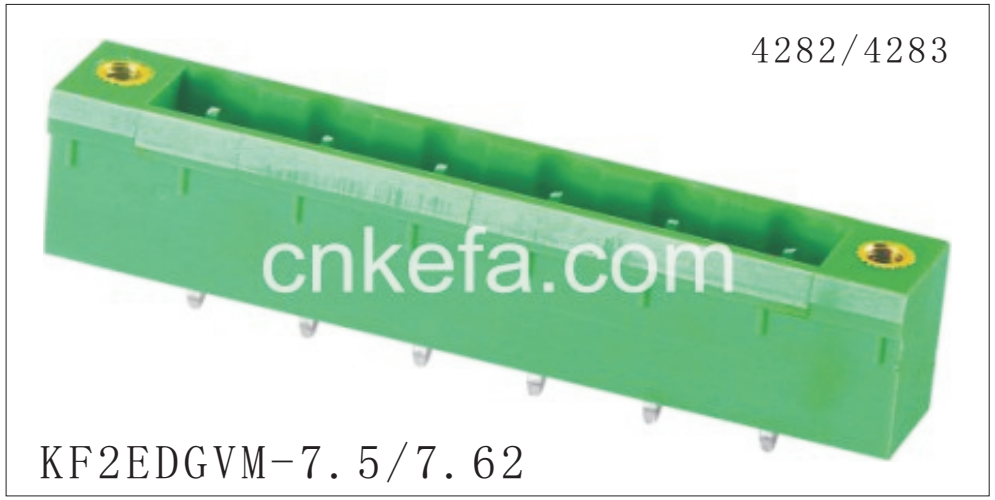


| 认证 | cULus | CE |
|---|---|---|
| **电气性能** | | |
| 参考标准 | UL | IEC |
| 额定电压 | 300V | 400V |
| 额定电流 | 10A | 15A |
| 耐 电 压 | AC2500V/1Min | |
| | | |
| **机械性能** | | |
| 温度范围 | -40℃—+105℃ | |
| | | |
| **尺寸** | | |
| 间距 | 7.5/7.62mm | |
| 极数 | 2P-24P | |
| **材质及电镀** | | |
| 塑体 | PA66 UL94V-0 | |
| 焊针 | 黄铜 镀锡 | |
| | | |

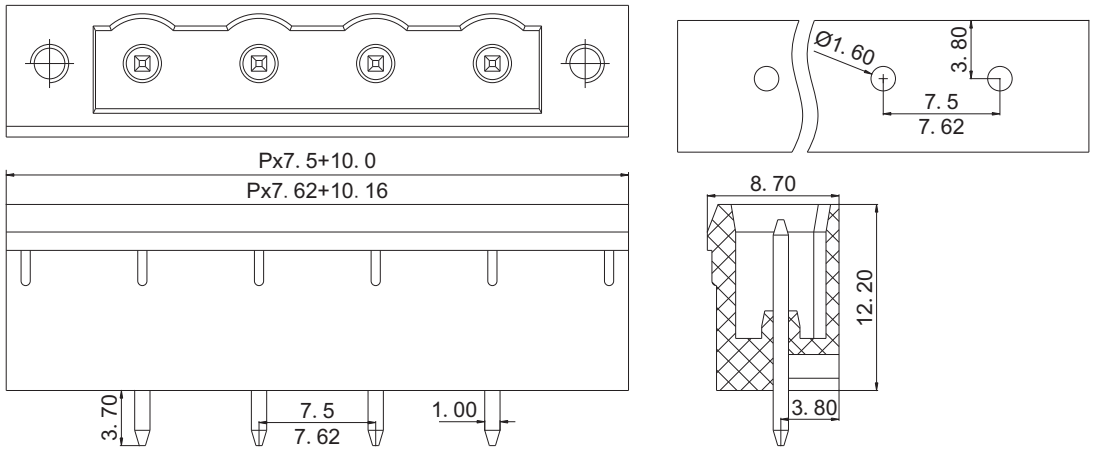


订购方式：

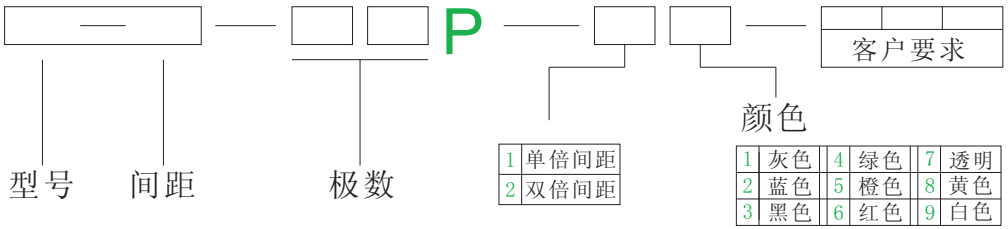


mm (INCH)

THIROANGIF PROJECTION

慈溪市科发电子有限公司
CIXI KEFA ELECTRONICS CO.,LTD.

NAME KF2EDGVM-7.5/7.62

# X-ON Electronics

Largest Supplier of Electrical and Electronic Components

***Click to view similar products for*** Pluggable Terminal Blocks ***category:***

***Click to view products by*** Cixi Kefa Elec ***manufacturer:***

Other Similar products are found below :

57.404.7553 57.504.0053.7 57.510.0053 57.910.6153 01.112.1453 CTB932VE/6 MC 1.5/ 6-ST-3.5 GY AU ET02015000J0G 734-104 734-302 734-304 8-141-P FKCT 2.5/ 3-ST KMGY 860505 860508 860516 860810 861908 GBPACX-12 93.731.4953.0 PV05-5,08-K PVP02-5,00 PVP04-3,50 PVS02-5,00 1-1986160-3 H-10 ELFH09150 ELFH16150 ELFP03110 ELFT06250 ELFT07250 ELVF09400 ELVP03100 ELXH03100 ELXH071G0E ELXP041G0 ELXT046G0 1700101 1700410 1700425 1703176 1705229 1710175 1714537 1717806 1719600 1729386 1734692 1734795 1736036