慈溪市科发电子有限公司
CIXI KEFA ELECTRONICS CO.,LTD.

产品规格书

认证	cULus	CE
电气性能		
参考标准	UL	IEC
额定电压	300V	400V
额定电流	10A	15A
耐 电 压	AC2500V/1Min	
机械性能		
温度范围	-40℃—+105℃	
尺寸		
间距	7.5/7.62mm	
极数	2P-24P	
材质及电镀		
塑体	PA66 UL94V-0	
焊针	黄铜 镀锡	

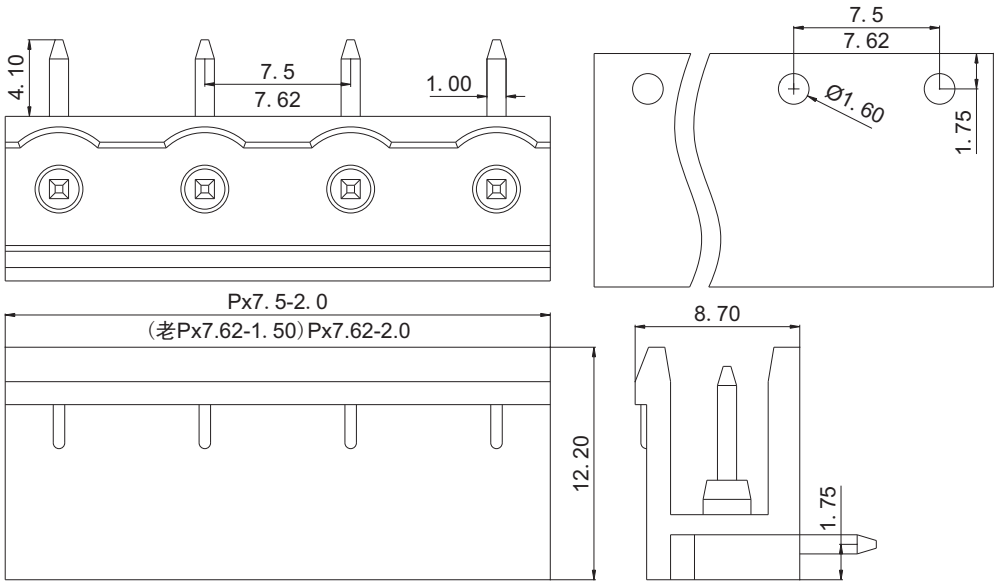

订购方式：

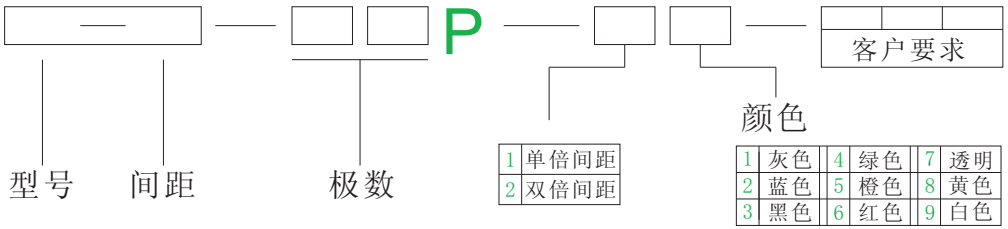

mm (INCH)	慈溪市科发电子有限公司 CIXI KEFA ELECTRONICS CO.,LTD.
THIROANGIF PROJECTION	NAME KF2EDGR-7.5/7.62

X-ON Electronics

Largest Supplier of Electrical and Electronic Components

Click to view similar products for Pluggable Terminal Blocks ***category:***

Click to view products by Cixi Kefa Elec ***manufacturer:***

Other Similar products are found below :

57.404.7553 57.504.0053.7 57.510.0053 57.910.6153 01.112.1453 CTB932VE/6 MC 1.5/ 6-ST-3.5 GY AU ET02015000J0G 734-104 734-302 734-304 8-141-P FKCT 2.5/ 3-ST KMGY 860505 860508 860516 860810 861908 GBPACX-12 93.731.4953.0 PV05-5,08-K PVP02-5,00 PVP04-3,50 PVS02-5,00 1-1986160-3 H-10 ELFH09150 ELFH16150 ELFP03110 ELFT06250 ELFT07250 ELVF09400 ELVP03100 ELXH03100 ELXH071G0E ELXP041G0 ELXT046G0 1700101 1700410 1700425 1703176 1705229 1710175 1714537 1717806 1719600 1729386 1734692 1734795 1736036