DATA SHEET

RM6S/I

RM, RM/I, RM/ILP cores and accessories

Supersedes data of September 2004

2008 Sep 01

FERROXCUBE
A YAGEO COMPANY

CORE SETS

Effective core parameters

SYMBOL	PARAMETER	VALUE	UNIT
Σ(l/A)	core factor (C1)	0.784	mm^{-1}
V_e	effective volume	1090	mm^3
l_e	effective length	29.2	mm
A_e	effective area	37.0	mm^2
A_{min}	minimum area	31.2	mm^2
m	mass of set	≈ 5.5	g

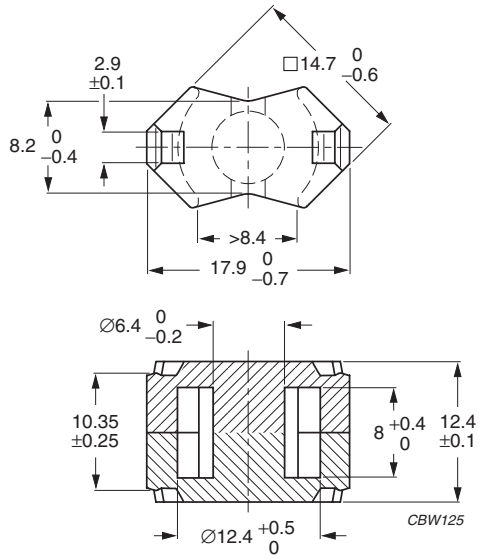

Dimensions in mm.

Fig.1 RM6S/I core set.

Core sets for filter applications

Clamping force for A_L measurements, 20 ±10 N.

GRADE	A_L (nH)	μ_e	AIR GAP (μm)	TYPE NUMBER
3B46 des	3650 ± 25 %	≈ 2280	≈ 0	RM6S/I-3B46
3D3	160 ±3%	≈ 100	≈ 300	RM6S/I-3D3-A160
	250 ±5%	≈ 156	≈ 170	RM6S/I-3D3-A250
	315 ±8%	≈ 197	≈ 120	RM6S/I-3D3-A315
	1050 ±25%	≈ 655	≈ 0	RM6S/I-3D3
3H3	315 ±3%	≈ 198	≈ 150	RM6S/I-3H3-A315
	400 ±3%	≈ 251	≈ 110	RM6S/I-3H3-A400
	630 ±5%	≈ 396	≈ 65	RM6S/I-3H3-A630
	2350 ±25%	≈ 1470	≈ 0	RM6S/I-3H3

Core sets for general purpose transformers and power applications

Clamping force for A_L measurements, 20 ±10 N.

GRADE	A_L (nH)	μ_e	TOTAL AIR GAP (μm)	TYPE NUMBER
3C81	63 ±3%	≈ 40	≈ 1080	RM6S/I-3C81-E63
	100 ±3%	≈ 63	≈ 600	RM6S/I-3C81-A100
	160 ±3%	≈ 100	≈ 340	RM6S/I-3C81-A160
	250 ±3%	≈ 157	≈ 200	RM6S/I-3C81-A250
	315 ±3%	≈ 198	≈ 150	RM6S/I-3C81-A315
	3000 ±25%	≈ 1870	≈ 0	RM6S/I-3C81

GRADE	A_L (nH)	μ_e	TOTAL AIR GAP (μm)	TYPE NUMBER
3C90	63 ±3%	≈ 40	≈ 1080	RM6S/I-3C90-A63
	100 ±3%	≈ 63	≈ 600	RM6S/I-3C90-A100
	160 ±3%	≈ 100	≈ 340	RM6S/I-3C90-A160
	250 ±3%	≈ 157	≈ 200	RM6S/I-3C90-A250
	315 ±3%	≈ 198	≈ 150	RM6S/I-3C90-A315
	400 ±3%	≈ 251	≈ 110	RM6S/I-3C90-A400
	630 ±5%	≈ 396	≈ 65	RM6S/I-3C90-A630
	2600 ±25%	≈ 1630	≈ 0	RM6S/I-3C90
3C91 des	3000 ±25%	≈ 1880	≈ 0	RM6S/I-3C91
3C94	63 ±3%	≈ 40	≈ 1080	RM6S/I-3C94-A63
	100 ±3%	≈ 63	≈ 600	RM6S/I-3C94-A100
	160 ±3%	≈ 100	≈ 340	RM6S/I-3C94-A160
	250 ±3%	≈ 157	≈ 200	RM6S/I-3C94-A250
	315 ±3%	≈ 198	≈ 150	RM6S/I-3C94-A315
	400 ±3%	≈ 251	≈ 110	RM6S/I-3C94-A400
	630 ±5%	≈ 396	≈ 65	RM6S/I-3C94-A630
	2600 ±25%	≈ 1630	≈ 0	RM6S/I-3C94
3C95 des	3000 ±25%	≈ 1880	≈ 0	RM6S/I-3C95
3C96 des	2350 ±25%	≈ 1470	≈ 0	RM6S/I-3C96
3F3	63 ±3%	≈ 40	≈ 1080	RM6S/I-3F3-A63
	100 ±3%	≈ 63	≈ 600	RM6S/I-3F3-A100
	160 ±3%	≈ 100	≈ 340	RM6S/I-3F3-A160
	250 ±3%	≈ 157	≈ 200	RM6S/I-3F3-A250
	315 ±3%	≈ 198	≈ 150	RM6S/I-3F3-A315
	2150 ±25%	≈ 1350	≈ 0	RM6S/I-3F3
3F35 prot	1750 ±25%	≈ 1100	≈ 0	RM6S/I-3F35
3F4 des	63 ±3%	≈ 39	≈ 1040	RM6S/I-3F4-A63
	100 ±3%	≈ 62	≈ 570	RM6S/I-3F4-A100
	160 ±3%	≈ 100	≈ 310	RM6S/I-3F4-A160
	250 ±3%	≈ 156	≈ 170	RM6S/I-3F4-A250
	315 ±3%	≈ 197	≈ 130	RM6S/I-3F4-A315
	1250 ±25%	≈ 780	≈ 0	RM6S/I-3F4
3F45 prot	1250 ±25%	≈ 780	≈ 0	RM6S/I-3F45

Core sets of high permeability grades

Clamping force for A_L measurements, 20 ±10 N.

GRADE	A_L (nH)	μ_e	TYPE NUMBER
3E27	6000 ±25%	≈ 3770	RM6S/I-3E27
3E5	8600 +40/–30%	≈ 5400	RM6S/I-3E5
3E6	11000 +40/–30%	≈ 6910	RM6S/I-3E6

Properties of core sets under power conditions

GRADE	B (mT) at	CORE LOSS (W) at				
	H = 250 A/m; f = 25 kHz; T = 100 °C	f = 25 kHz; $\hat{B}$ = 200 mT; T = 100 °C	f = 100 kHz; $\hat{B}$ = 100 mT; T = 100 °C	f = 100 kHz; $\hat{B}$ = 200 mT; T = 25 °C	f = 100 kHz; $\hat{B}$ = 200 mT; T = 100 °C	f = 400 kHz; $\hat{B}$ = 50 mT; T = 100 °C
3C81	≥320	≤ 0.25	–	–	–	–
3C90	≥320	≤ 0.13	≤ 0.14	–	–	–
3C91	≥315	–	≤ 0.08(1)	–	≤ 0.4(1)	–
3C94	≥320	–	≤ 0.11	–	≤ 0.6	–
3C95	≥320	–	–	≤ 0.64	≤ 0.61	–
3C96	≥340	–	≤ 0.08	–	≤ 0.4	≤ 0.2
3F3	≥315	–	≤ 0.14	–	–	≤ 0.2
3F35	≥315	–	–	–	–	≤ 0.12
3F4	≥250	–	–	–	–	–

Properties of core sets under power conditions (continued)

GRADE	B (mT) at	CORE LOSS (W) at				
	H = 250 A/m; f = 25 kHz; T = 100 °C	f = 500 kHz; $\hat{B}$ = 50 mT; T = 100 °C	f = 500 kHz; $\hat{B}$ = 100 mT; T = 100 °C	f = 1 MHz; $\hat{B}$ = 30 mT; T = 100 °C	f = 1 MHz; $\hat{B}$ = 50 mT; T = 100 °C	f = 3 MHz; $\hat{B}$ = 10 mT; T = 100 °C
3C96	≥340	≤ 0.5	–	–	–	–
3F3	≥315	–	–	–	–	–
3F35	≥315	≤ 0.16	≤ 1.3	–	–	–
3F4	≥250	–	–	≤ 0.33	–	≤ 0.53
3F45	≥250	–	–	≤ 0.25	≤ 0.94	≤ 0.44

Note

1. Measured at 60 °C.

COIL FORMERS

General data

PARAMETER	DESCRIPTION
Coil former material	polybutyleneterephthalate (PBT), glass-reinforced, flame retardant in accordance with *"UL 94V-0"*; UL file number E45329(M)
Pin material	copper-tin alloy (CuSn), tin (Sn) plated
Maximum operating temperature	155 °C, *"IEC 60085",* class F
Resistance to soldering heat	*"IEC 60068-2-20"*, Part 2, Test Tb, method 1B, 350 °C, 3.5 s
Solderability	*"IEC 60068-2-20"*, Part 2, Test Ta, method 1

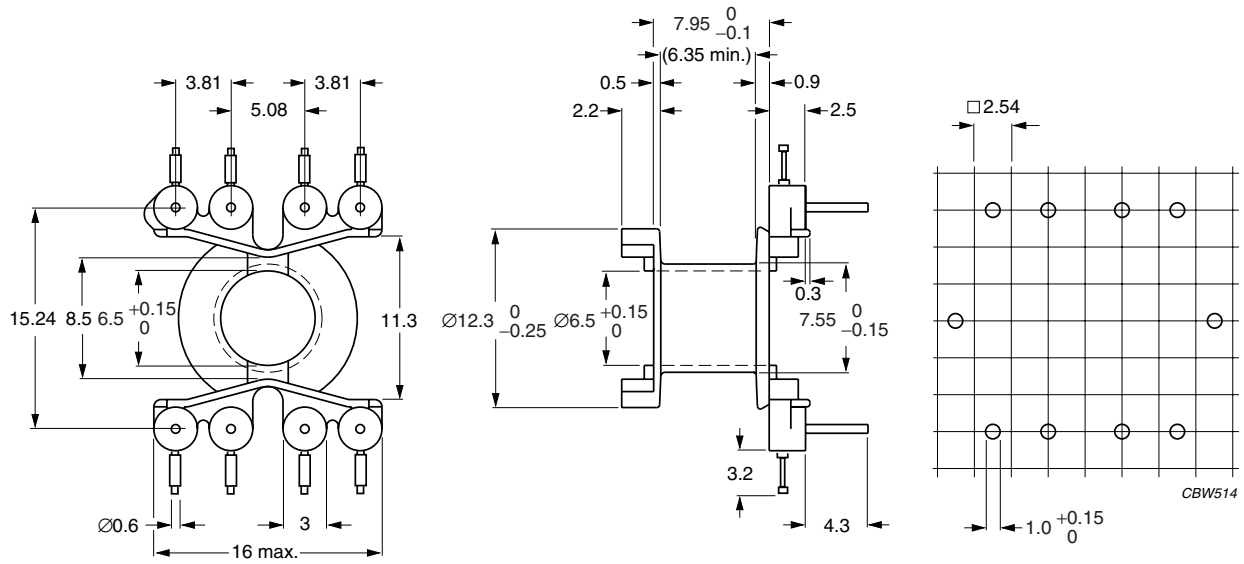

Dimensions in mm.

Fig.2 RM6S/I coil former; 8-pins (DIL).

Winding data and area product for 8-pins RM6S/I coil former (DIL)

NUMBER OF SECTIONS	WINDING AREA (mm^2)	WINDING WIDTH (mm)	AVERAGE LENGTH OF TURN (mm)	AREA PRODUCT Ae x Aw (mm^4)	TYPE NUMBER
1	15.7	6.2	31	5.81	CPV-RM6S/I-1S-8PD

General data SMD coil former

PARAMETER	SPECIFICATION
Coil former material	phenolformaldehyde (PF), glass-reinforced, flame retardant in accordance with *"UL 94V-0"*; UL file number E41429 (M)
Solder pad material	copper-tin alloy (CuSn), tin (Sn) plated
Maximum operating temperature	155 °C, *"IEC 60085"*, class F
Resistance to soldering heat	*"IEC 60068-2-20"*, Part 2, Test Tb, method 1B, 350 °C, 3.5 s
Solderability	*"IEC 60068-2-20"*, Part 2, Test Ta, method 1

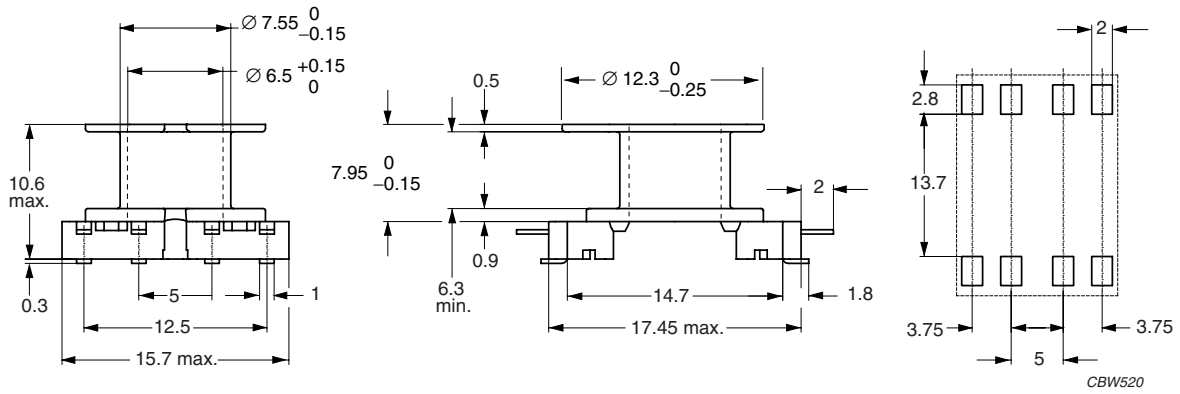

Dimensions in mm.

Fig.3 SMD coil former for RM6S/I.

Winding data and area product for RM6S/I coil former (SMD)

NUMBER OF SECTIONS	NUMBER OF SOLDER PADS	WINDING AREA (mm^2)	WINDING WIDTH (mm)	AVERAGE LENGTH OF TURN (mm)	AREA PRODUCT Ae x Aw (mm^4)	TYPE NUMBER
1	8	14	6.3	31	518	CSVS-RM6S-1S-8P

General data SMD coil former

PARAMETER	SPECIFICATION
Coil former material	phenolformaldehyde (PF), glass-reinforced, flame retardant in accordance with *"UL 94V-0"*; UL file number E41429 (M)
Solder pad material	copper-tin alloy (CuSn), tin (Sn) plated
Maximum operating temperature	155 °C, *"IEC 60085"*, class F
Resistance to soldering heat	*"IEC 60068-2-20"*, Part 2, Test Tb, method 1B, 350 °C, 3.5 s
Solderability	*"IEC 60068-2-20"*, Part 2, Test Ta, method 1

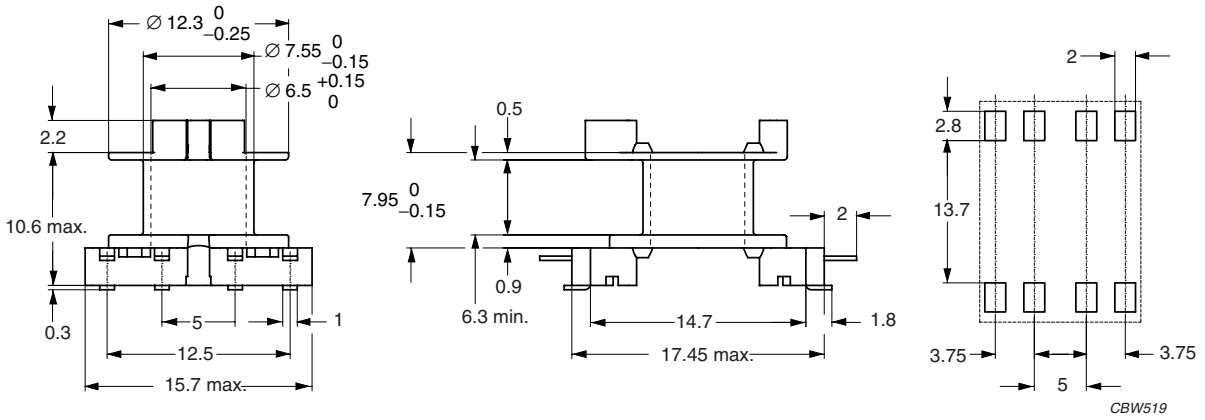

Dimensions in mm.

Fig.4 SMD coil former for RM6S/I.

Winding data and area product for RM6S/I coil former (SMD)

NUMBER OF SECTIONS	NUMBER OF SOLDER PADS	WINDING AREA (mm^2)	WINDING WIDTH (mm)	AVERAGE LENGTH OF TURN (mm)	AREA PRODUCT Ae x Aw (mm^4)	TYPE NUMBER
1	8	14.2	6.3	31.4	525	CSVS-RM6S-1S-8P-B

Additional coil formers are those of *"RM6S"*, but *"area product"* is different..

Winding data and area product (for RM6S/I) for 4-pins RM6S coil former

NUMBER OF SECTIONS	NUMBER OF PINS	PIN POSITIONS USED	WINDING AREA (mm^2)	WINDING WIDTH (mm)	AVERAGE LENGTH OF TURN (mm)	AREA PRODUCT Ae x Aw (mm^4)	TYPE NUMBER
1	4	all	15	6.4	30	555	CSV-RM6S/R-1S-4P
2	4	all	2×7.0	2×3.0	30	2 x 259	CSV-RM6S/R-2S-4P

Winding data and area product (for RM6S/I) for RM6S coil former

NUMBER OF SECTIONS	NUMBER OF PINS	PIN POSITIONS USED	WINDING AREA (mm^2)	WINDING WIDTH (mm)	AVERAGE LENGTH OF TURN (mm)	AREA PRODUCT Ae x Aw (mm^4)	TYPE NUMBER
1	6	all	15.0	6.3	30.0	555	CSV-RM6S-1S-6P-G(1)
1	5	1, 2, 3, 5, 6	15.0	6.3	30.0	555	CSV-RM6S-1S-5P-G(1)
1	4	2, 3, 5, 6	15.0	6.3	30.0	555	CSV-RM6S-1S-4P-G(1)
2	6	all	2×7.0	2×3	30.0	2 x 259	CSV-RM6S-2S-6P-G(1)

Note 1

Also available with post-inserted pins.

Winding data and area product (for RM6S/I) for RM6S coil former

NUMBER OF SECTIONS	NUMBER OF PINS	WINDING AREA (mm^2)	WINDING WIDTH (mm)	AVERAGE LENGTH OF TURN (mm)	AREA PRODUCT Ae x Aw (mm^4)	TYPE NUMBER
1	8	14.5	6.26	30.7	536	CSV-RM6S-1S-8P

MOUNTING PARTS

General data

ITEM	SPECIFICATION
Clamping force	≈10 N
Clip material	stainless steel (CrNi)
Clip plating	tin (Sn)
Solderability	*"IEC 60068-2-20"*, Part 2, Test Ta, method 1
Type number	CLI/P-RM6/I

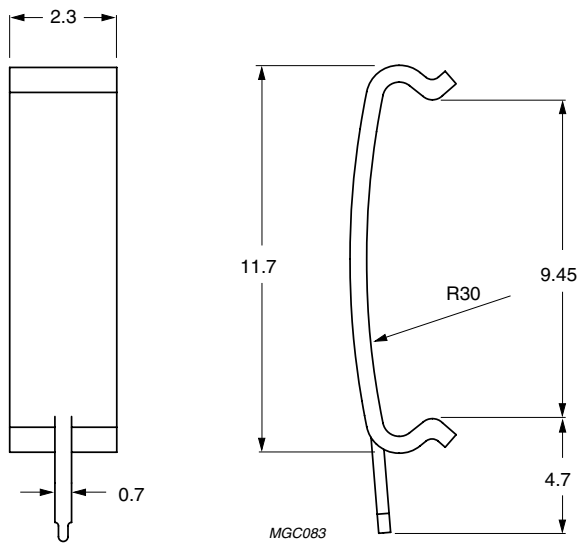

Dimensions in mm.

Fig.5 Mounting clip with earth pin for RM6/I.

General data mounting clip without earth pin

ITEM	SPECIFICATION
Clamping force	≈10 N
Clip material	stainless steel (CrNi)
Type number	CLI-RM6/I

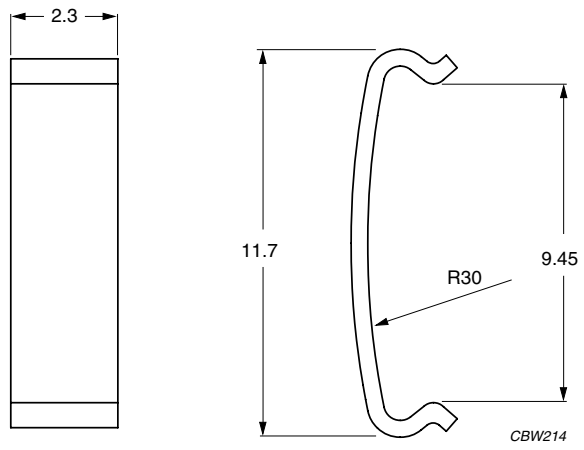

Dimensions in mm.

Fig.6 Mounting clip without earth pin for RM6/I.

DATA SHEET STATUS DEFINITIONS

DATA SHEET STATUS	PRODUCT STATUS	DEFINITIONS
Preliminary specification	Development	This data sheet contains preliminary data. Ferroxcube reserves the right to make changes at any time without notice in order to improve design and supply the best possible product.
Product specification	Production	This data sheet contains final specifications. Ferroxcube reserves the right to make changes at any time without notice in order to improve design and supply the best possible product.

DISCLAIMER

Life support applications — These products are not designed for use in life support appliances, devices, or systems where malfunction of these products can reasonably be expected to result in personal injury. Ferroxcube customers using or selling these products for use in such applications do so at their own risk and agree to fully indemnify Ferroxcube for any damages resulting from such application.

PRODUCT STATUS DEFINITIONS

STATUS	INDICATION	DEFINITION
Prototype	prot	These are products that have been made as development samples for the purposes of technical evaluation only. The data for these types is provisional and is subject to change.
Design-in	des	These products are recommended for new designs.
Preferred		These products are recommended for use in current designs and are available via our sales channels.
Support	sup	These products are **not** recommended for new designs and may not be available through all of our sales channels. Customers are advised to check for availability.