High Performance, General-Purpose, PID Control Temperature Controller

▣ Features

- 50ms high-speed sampling rate and ±0.3% display accuracy
- Simultaneous heating and cooling control function
- Automatic/manual control option
- Switch between current output and SSR drive output
- SSR drive output (SSRP function) control options: ON/OFF control, cycle control, phase control
- Communication output models available: RS485 (Modbus RTU)
- Parameter configuration via PC (RS485 communication)
  - DAQMaster software included (comprehensive device management software)
  - Communication converter sold separately
    : SCM-WF48 (Wi-Fi to RS485·USB wireless communication converter), SCM-US48I (USB to RS485 converter), SCM-38I (RS232C to RS485 converter), SCM-US (USB to serial converter)
- User-friendly parameter features (via DAQMaster)
- SV preset function (up to 4 set values) using digital input terminals
- Heater disconnect alarm function (CT input)
  - Current transformer (CT) sold separately: CSTC-E80LN, CSTC-E200LN, CSTS-E80PP
- Various input types and temperature ranges

Please read "Safety Considerations" in operation manual before using.

▣ Manual

- For the detail information and instructions, please refer to user manual and user manual for communication, and be sure to follow cautions written in the technical descriptions (catalog, homepage). Visit our homepage (www.autonics.com) to download manuals.
- User manual describes for specifications and function, and communication manual describes for RS485 communication (Modbus RTU protocol) and parameter address map data.

▣ Comprehensive Device Management Program (DAQMaster)

- DAQMaster is comprehensive device management program. It is available for parameter setting, monitoring, and user parameter group setting, parameter mask setting for only TK4 Series.
- Visit our website (www.autonics.com) to download user manual and comprehensive device management program.

< Computer specification for using software >

Item	Minimum requirements
System	IBM PC compatible computer with Intel Pentium III or above
Operating system	Microsoft Windows 98/NT/XP/Vista/7/8/10
Memory	256MB or more
Hard disk	More than 1GB of free hard disk space
VGA	1024×768 or higher resolution display
Others	RS-232 serial port (9-pin), USB port

< DAQMaster screen >

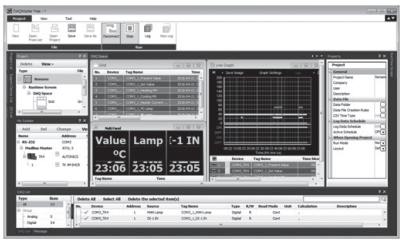

▣ Ordering Information

TK	4	S	—	1	4	R	R

OUT 2 control output※9

Standard	N	None ※Select in case of standard control (Heating or Cooling)
Heating & Cooling※10	R	Relay output
	C	Current output or SSR drive output selectable

OUT 1 control output※7

R	Relay output
S※8	SSR drive output (standard ON/OFF control, phase control, cycle control)
C	Current output or SSR drive output selectable

Power supply

2※6	24VAC 50/60Hz, 24-48VDC
4	100-240VAC 50/60Hz

Option input/output ※2

N	1	Standard	Alarm output 1+CT input※3
		Heating&Cooling	Alarm output 2※4
	2	Standard	Alarm output 1+Alarm output 2
	D	Standard	Alarm output 1+Digital input (DI-1, DI-2)
		Heating&Cooling	Digital input (DI-1, DI-2)
	R	Standard	Alarm output 1+Transmission output
		Heating&Cooling	Transmission output
	T	Standard	Alarm output 1+RS485 communication output
		Heating&Cooling	RS485 communication output
SP	1	Alarm output 1	
S M W H L	1	Alarm output 1	
	2	Alarm output 1+Alarm output 2	
	R	Alarm output 1+Transmission output	
	T	Alarm output 1+RS485 communication output	
	A	Alarm output 1+Alarm output 2+Transmission output	
	B	Alarm output 1+Alarm output 2+RS485 communication output	
	D	Alarm output 1+Alarm output 2+Digital input (DI-1, DI-2)※5	

Size

N	DIN W48×H24mm
SP	DIN W48×H48mm (11-pin plug type)※1
S	DIN W48×H48mm (Terminal block type)
M	DIN W72×H72mm
W	DIN W96×H48mm
H	DIN W48×H96mm
L	DIN W96×H96mm

Digit

4	9999 (4-digit)

Item

TK	Temperature/Process Controller

※1. 11Pin socket(PG-11, PS-11(N)): Sold separately
※2. In case of TK4N/TK4SP Series, option control output selection and digital input will be limited due to number of terminals.
※3. The CT input model of TK4N is selectable only for standard model which has alarm 1.
※4. The Heaing & Cooling model of TK4N-1□□□ has only alarm output 2.
※5. Only for TK4S-D□□□, OUT2 output terminal is used as DI-2 input terminal.
※6. Does not support in TK4N.
※7. “S” represents SSR drive output support models which SSRP function (standard ON/OFF, cycle, phase)control are available. “C” represents selectable current and SSR drive output support models.
※8. Does not support in AC/DC voltage type model.
※9. Select “R” or “C” type in case of using heating & cooling control. “N” type in case of using standard control.
※10. In case of Relay OUT2 model, alarm output 3 is available only when control output operation mode [o-Ft] is set heating [HEAt] or cooling [CooL]. In case of current output, trans. output 2 is available only when control output operation mode [o-Ft] is set heating [HEAt] or cooling[CooL].

■ Specifications

Series		TK4N	TK4SP	TK4S	TK4M	TK4W	TK4H	TK4L
Power supply	AC voltage	100-240VAC～ 50/60Hz						
	AC/DC voltage	—	24VAC～ 50/60Hz, 24-48VDC⎓					
Allowable voltage range		90 to 110% of rated voltage						
Power consumption	AC voltage	Max. 6VA	Max. 8VA					
	AC/DC voltage	—	Max. 8VA (24VAC 50/60Hz), max. 5W (24-48VDC)					
Display method		7-segment (PV: red, SV: green), other display part (green, yellow, red) LED method						
Character size	PV (W×H)	4.5×7.2mm	7.0×14.0mm		9.5×20.0mm	8.5×17.0mm	7.0×14.6mm	11.0×22.0mm
	SV (W×H)	3.5×5.8mm	5.0×10.0mm		7.5×15.0mm	6.0×12.0mm	6.0×12.0mm	7.0×14.0mm
Input type	RTD	JPt100Ω, DPt100Ω, DPt50Ω, Cu100Ω, Cu50Ω, Nikel 120Ω (6 types)						
	Thermocouple	K(CA), J(IC), E(CR), T(CC), B(PR), R(PR), S(PR), N(NN), C(TT), G(TT), L(IC), U(CC), Platinel II (13 types)						
	Analog	• Voltage: 0-100mVDC⎓, 0-5VDC⎓, 1-5VDC⎓, 0-10VDC⎓ (4 types) • Current: 0-20mA, 4-20mA (2 types)						
Display accuracy	RTD	• At room temperature (23℃±5℃): (PV ±0.3% or ±1℃, select the higher one) ±1-digit ※1 • Out of room temperature range: (PV ±0.5% or ±2℃, select the higher one) ±1-digit ※In case of TK4SP Series, ±1℃ will be added.						
	Thermocouple							
	Analog	• At room temperature (23℃±5℃): ±0.3% F.S. ±1-digit • Out of range of room temperature: ±0.5% F.S. ±1-digit						
	CT input	±5% F.S. ±1-digit						
Control output	Relay	OUT1, OUT2: 250VAC～ 3A, 30VDC⎓ 3A, 1a						
	SSR	11VDC⎓±2V 20mA Max.						
	Current	DC4-20mA or DC0-20mA selectable (load 500Ω max.)						
Alarm output	Relay	AL1, AL2: 250VAC～ 3A 1a ※TK4N AL2: 250VAC～ 0.5A 1a (max.125VA), TK4SP has only AL1.						
Option output	Transmission	DC4-20mA (load 500Ω max., accuracy: ±0.3% F.S.)						
	Communication	RS485 communication output (Modbus RTU)						
Option input	CT input	0.0-50.0A (primary heater current value measuring range) ※CT ratio = 1/1000 (except TK4SP)						
	Digital input	• Contact Input: ON - max. 2kΩ, OFF - min. 90kΩ • Non-contact Input: ON - residual votage max. 1.0VDC⎓, OFF - leakage current max. 0.1mA • Outflow current: approx. 0.5mA ※TK4S/M: 1 (TK4S-D□ □ □: 2, TK4SP: none), TK4N/H/W/L: 2						
Control type	Heating, cooling	ON/OFF, P, PI, PD, PID control						
	Heating&cooling							
Hysteresis		• RTD/Thermocouples: 1 to 100℃/℉ (0.1 to 100.0℃/℉) variable • Analog: 1 to 100-digit						
Proportional band (P)		0.1 to 999.9℃/℉ (0.1 to 999.9%)						
Integral time (I)		0 to 9999 sec						
Derivative time (D)		0 to 9999 sec						
Control period (T)		• Relay output, SSR drive output: 0.1 to 120.0 sec • Current output or SSR drive output selectable: 1.0 to 120.0 sec						
Manual reset value		0.0 to 100.0%						
Sampling period		50ms						
Dielectric strength		2,000VAC 50/60Hz for 1 min (between power source terminal and input terminal)						
Vibration		0.75mm amplitude at frequency of 5 to 55Hz (for 1 min) in each X, Y, Z direction for 2 hours						
Relay life cycle	Mechanical	• OUT1/2: min. 5,000,000 times • AL1/2: min. 20,000,000 times (TK4H/W/L: min. 5,000,000 times)						
	Electrical	OUT1/OUT2, AL1/AL2: min. 100,000 operations						
Insulation resistance		Over 100MΩ (at 500VDC megger)						
Noise immunity		±2kV R-phase, S-phase the square wave noise (pulse width: 1μs) by the noise simulator						
Memory retention		Approx. 10 years (when using non-volatile semiconductor memory type)						
Environment	Ambient temperature	-10 to 50℃, storage: -20 to 60℃						
	Ambient humidity	35 to 85%RH, storage: 35 to 85%RH						
Protection structure		IP65 (front panel) ※TK4SP: IP50 (front panel)						
Insulation type		Double insulation or reinforced insulation (mark: ⊡, dielectric strength between the measuring input part and the power part: 2kV)						
Approval		CE cULus						
Weight※2		Approx. 140g (approx. 70g)	Approx. 130g (approx. 85g)	Approx. 150g (approx. 105g)	Approx. 210g (approx. 140g)	Approx. 211g (approx. 141g)		Approx. 294g (approx. 198g)

※1: ◎ At room temperature (23℃±5℃)
- Thermocouple K, J, T, N, E type, below -100℃/Thermocouple L, U, PLII type, RTD Cu50Ω, DPt50Ω : (PV ±0.3% or ±2℃, select the higher one) ±1-digit
- Thermocouple C, G, R, S type, below 200℃: (PV ±0.3% or ±3℃, select the higher one) ±1-digit
- Thermocouple B type, below 400℃: there is no accuracy standards.

◎ Out of room temperature range
- RTD Cu50Ω, DPt50Ω: (PV ±0.5% or ±3℃, select the higher one) ±1-digit
- Thermocouple R, S, B, C, G type: (PV ±0.5% or ±5℃, select the higher one) ±1-digit
- Others, Below -100℃: within ±5℃

In case of TK4SP Series, ±1℃ will be added to the degree standard.

※2: The weight includes packaging. The weight in parenthesis is for unit only.

※Environment resistance is rated at no freezing or condensation.

▣ Connections

※Please check the polarity when connecting temperature sensor or analog input.
※Standard model has shaded terminals only.
※Operation mode of heating&cooling OUT 2 relay output model is heating or cooling, OUT 2 is available as alarm output 3. (except TK4N Series).
※Operation mode of heating&cooling OUT 2 current output model is heating or cooling, OUT 2 is available as transmission output 2.
※Use teminals of size specified below.

	a	b
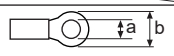 <Round>	Min. 3.0mm	Max. 5.8mm
<Forked>	Min. 3.0mm	Max. 5.8mm

● TK4N

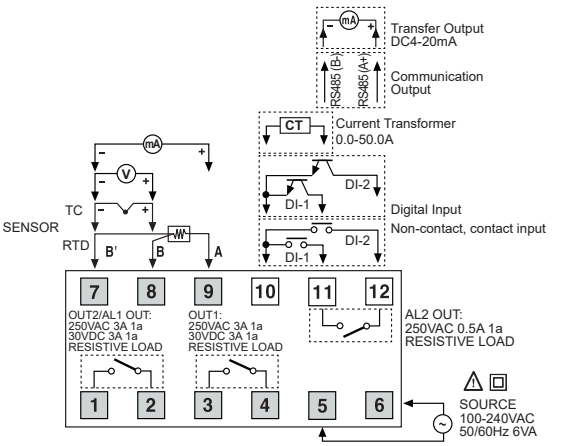

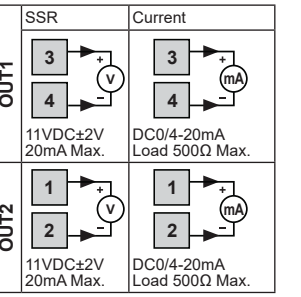

● TK4S

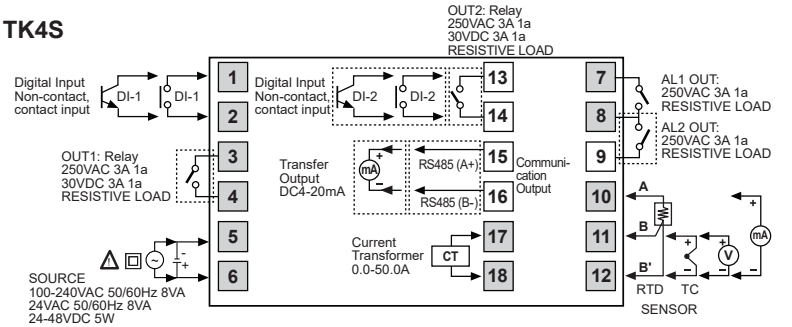

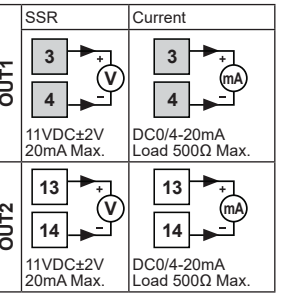

● TK4SP

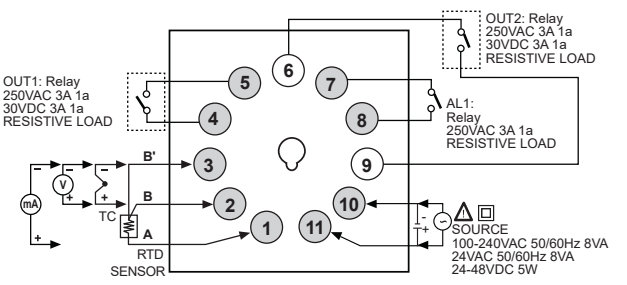

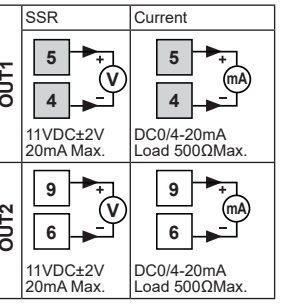

▣ Connections

● TK4M

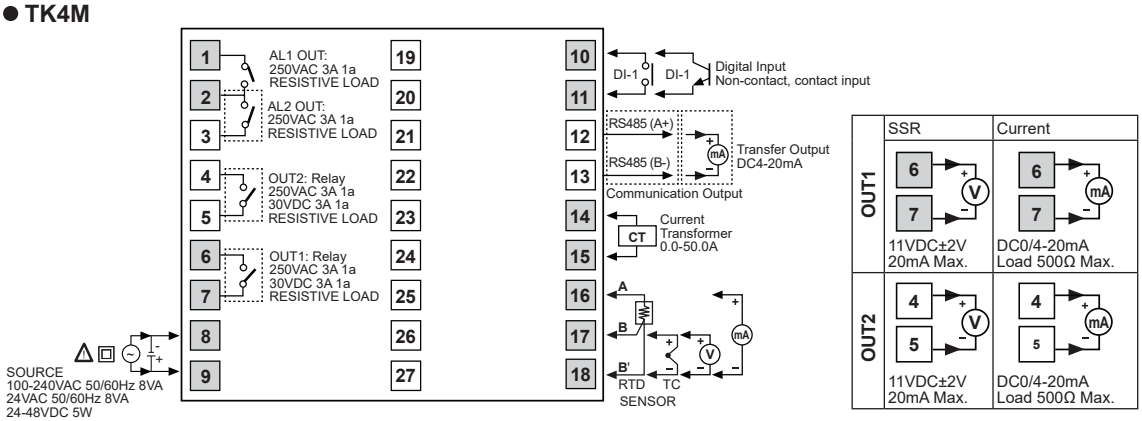

● TK4H/TK4W/TK4L

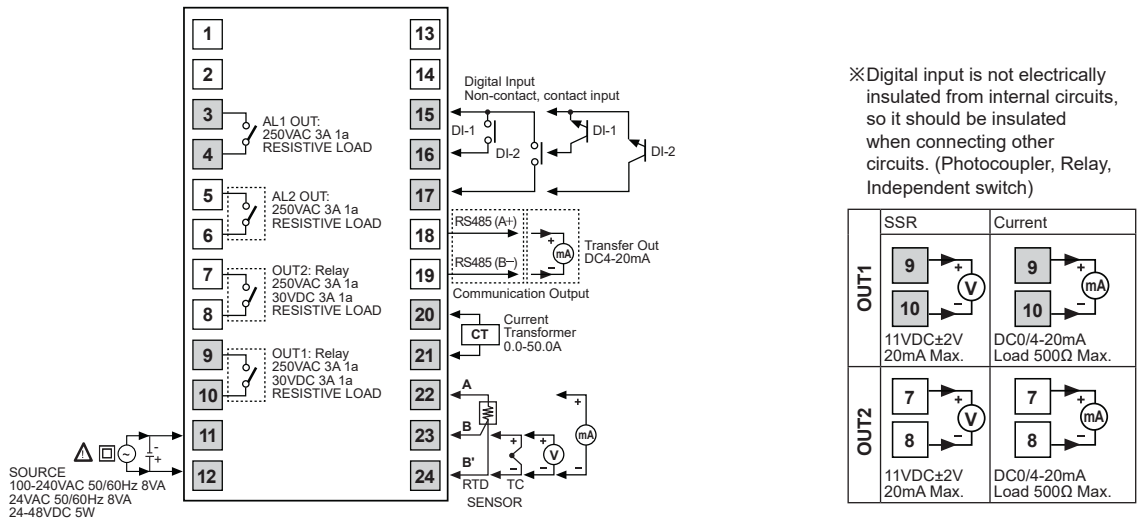

※Digital input is not electrically insulated from internal circuits, so it should be insulated when connecting other circuits. (Photocoupler, Relay, Independent switch)

▣ Dimensions

(unit: mm)

● TK4N Series

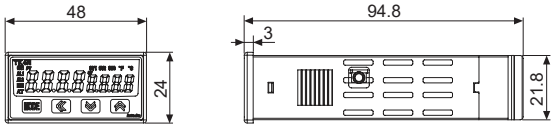

● TK4S Series

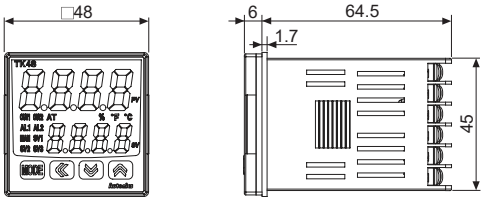

● TK4SP Series

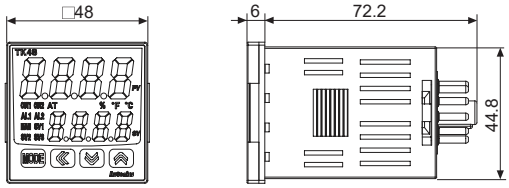

● TK4M Series

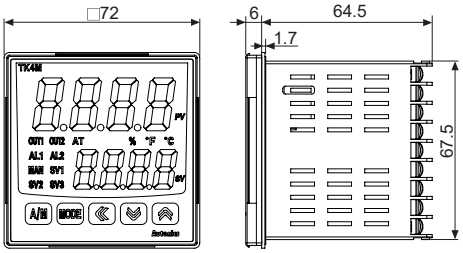

▣ Dimensions

(unit: mm)

● TK4W Series

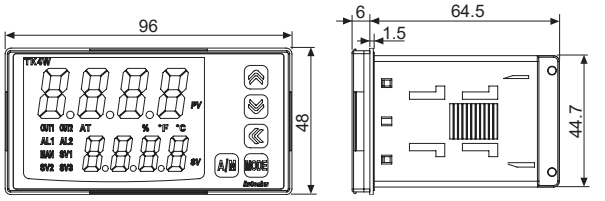

● TK4H Series

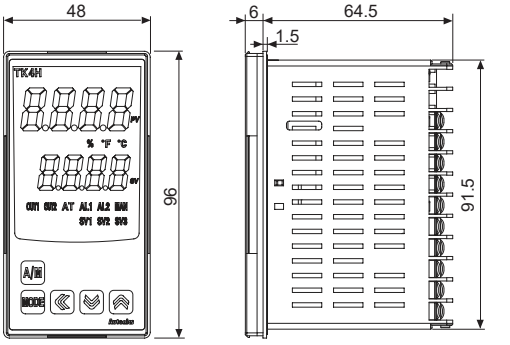

● TK4L Series

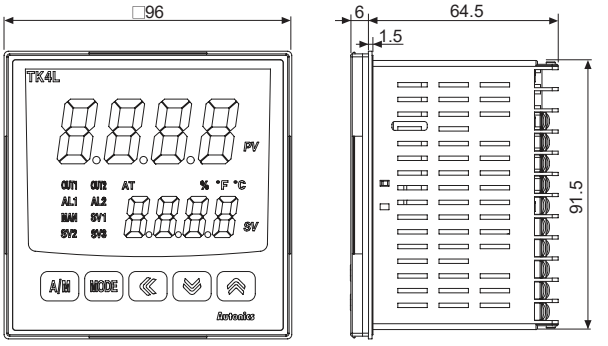

● Panel cut-out

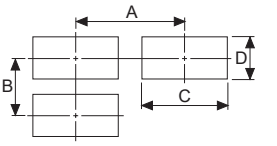

(unit: mm)

Model \ Size	A	B	C	D
TK4N	Min. 55	Min. 37	$45^{+0.6}_{0}$	$22.2^{+0.3}_{0}$
TK4S	Min. 65	Min. 65	$45^{+0.6}_{0}$	$45^{+0.6}_{0}$
TK4SP	Min. 65	Min. 65	$45^{+0.6}_{0}$	$45^{+0.6}_{0}$
TK4M	Min. 90	Min. 90	$68^{+0.7}_{0}$	$68^{+0.7}_{0}$
TK4H	Min. 65	Min. 115	$45^{+0.6}_{0}$	$92^{+0.8}_{0}$
TK4W	Min. 115	Min. 65	$92^{+0.8}_{0}$	$45^{+0.6}_{0}$
TK4L	Min. 115	Min. 115	$92^{+0.8}_{0}$	$92^{+0.8}_{0}$

● Bracket

●TK4N Series

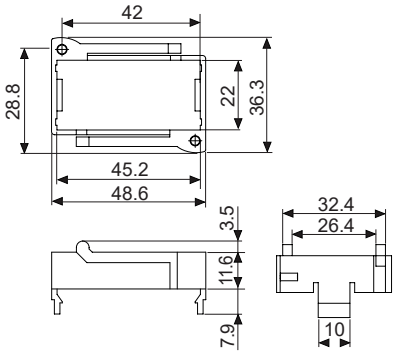

●TK4S, TK4SP Series

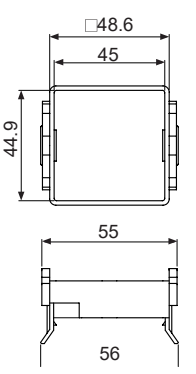

●TK4M/W/H/L Series

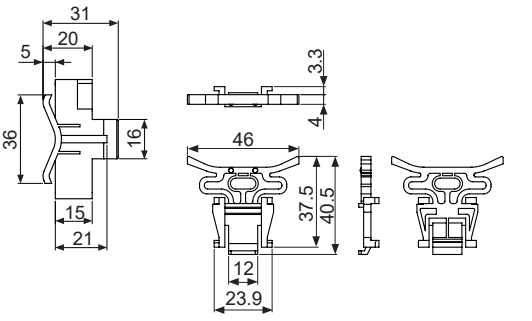

● Terminal cover (sold separately)

●TK4N Cover (48×24mm)

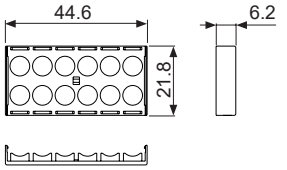

※TK4N COVER is accessory.

●RSA Cover (48×48mm)

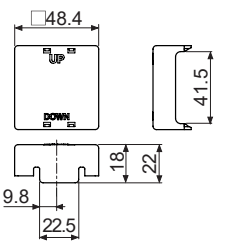

●RMA Cover (72×72mm)

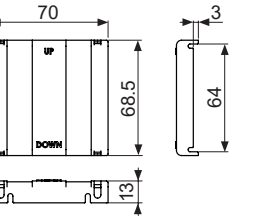

■ Dimensions

(unit: mm)

● Terminal cover (sold separately)

●RHA Cover (48×96mm, 96×48mm)

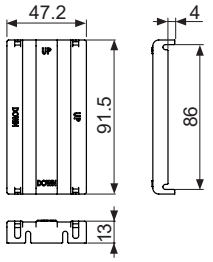

●RLA Cover (96×96mm)

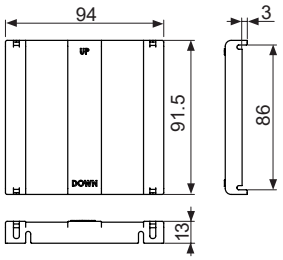

■ Product Mounting

● TK4N (48×24mm) Series

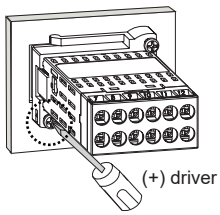

※Insert the unit into a panel, fasten the bolt with a (+) driver.

● TK4S/SP (48×48mm) Series

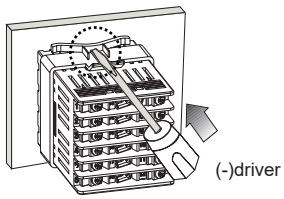

※Insert the unit into a panel, fasten the bracket by pushing with tools with a (-) driver.

● Other Series

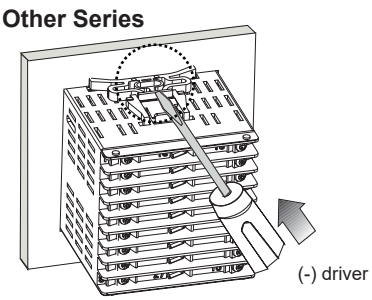

■ Unit Description

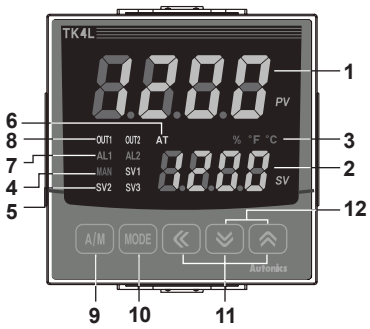

TK4N Series **Other Series**

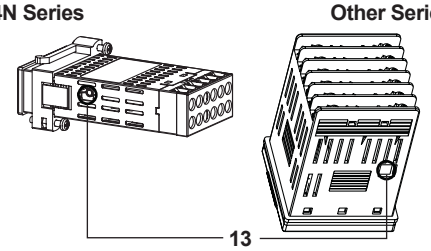

※The input selection switch (TC, RTD/mV, V, mA) switch disappears. Select input type [In-t] in parameter 3 group.

The previous model

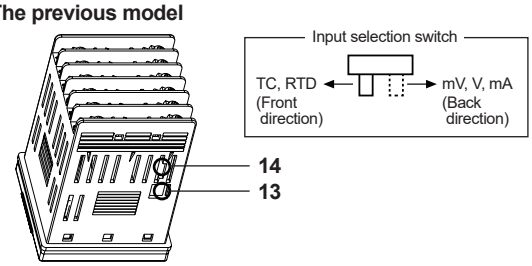

1. **Measured value (PV) display part:**
   - RUN mode: It displays currently measured value (PV).
   - Setting mode: It displays the parameter.
2. **Set value (SV) display part:**
   - RUN mode: It displays the set value (SV).
   - Setting mode: It displays the set value of the parameter.
3. **Unit (℃/℉/%) indicator:** It displays the unit set at display unit [Unt] in parameter 3 group. (In case of TK4N, % is not supported)
4. **Manual control indicator:** It turns ON during manual controlling.
5. **Multi SV indicator:** One of SV1 to 3 indicators will be ON in case of selecting multi SV function.
6. **Auto tuning indicator:** It flashes by 1 sec when executing auto tuning.
7. **Alarm output (AL 1, AL 2) indicator:** It turns ON when the alarm output is ON.
8. **Control output (OUT 1, OUT 2) indicator:** It turns ON when the control output is ON.
   ※During cycle/phase controlling in SSRP function model (TK4□-□4S□) when MV is over 5.0%, it turns ON.
   ※To use current output, when MV is 0.0% in manual control, it turns OFF. Otherwise, it always turns ON. When MV is over 3.0% in auto control, it turns ON and when MV is below 2.0%, it turns OFF.
9. **A/M key:** It is used when switching auto control to manual control.
   ※TK4N/S/SP do not have A/M key. MODE key operates switching simultaneously.
10. **MODE key:** It is used when entering parameter setting group, returning to RUN mode, moving parameter, saving the set value.
11. **≪, ≫, ⌃ key:** It is used when entering the set value changing mode and moving or changing up/down digit.
12. **Digital input key:** When pressing ≫ + ⌃ keys for 3 sec at the same time, it operates the function (RUN/STOP, alarm clear, auto tuning) set at digital input key [dI-t] in parameter 5 group.
13. **PC loader port:** It is the PC loader port for serial communication to set parameter and monitoring by DAQMaster installed in PC. Use this for connecting SCM-US (USB to Serial converter, sold separately).
14. **Input selection switch:** Used when switching sensor (TC, RTD) input ↔ analog input (mV, V, mA). (only the previous model)

▣ Sold Separately

◎ Communication converter

- **SCM-WF48** (Wi-Fi to RS485·USB wireless communication converter)
- **SCM-US48I** (USB to RS485 converter)
- **SCM-38I** (RS232C to RS485 converter)
- **SCM-US** (USB to Serial converter)

◎ Current transformer (CT)

- **CSTC-E80LN**

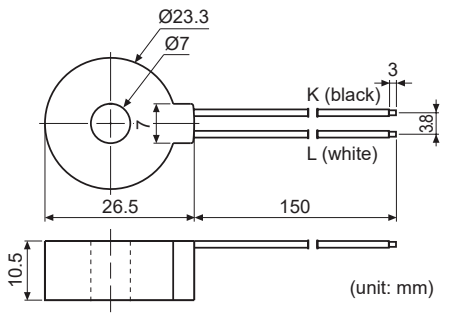

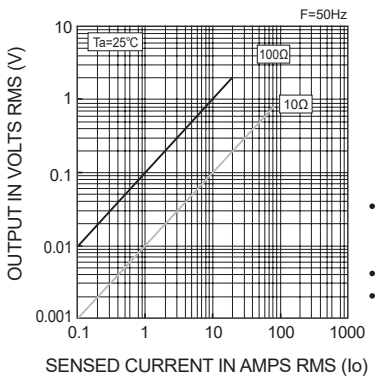

- Max. load current: 80A (50/60Hz)
  ※Max. load current for TK4 Series is 50A.
- Current ratio: 1/1000
- Wire wounded resistance: 31Ω±10%

- **CSTC-E200LN**

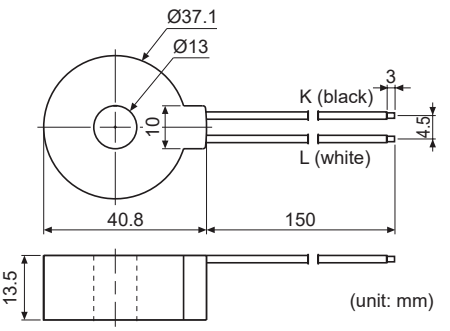

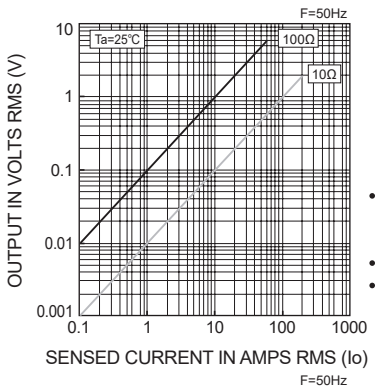

- Max. load current: 200A (50/60Hz)
  ※Max. load current for TK4 Series is 50A.
- Current ratio: 1/1000
- Wire wounded resistance: 20Ω±10%

- **CSTS-E80PP**

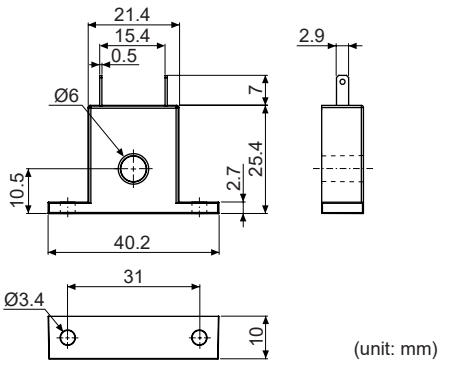

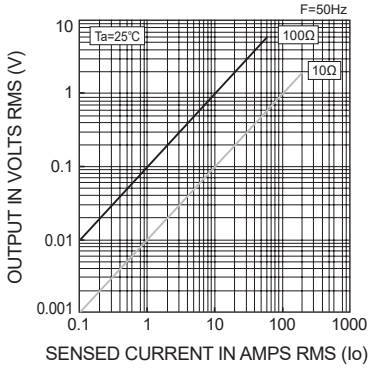

- Max. load current: 80A (50/60Hz)
  ※Max. load current for TK4 Series is 50A.
- Current ratio: 1/1000
- Wire wounded resistance 31Ω±10%

※Do not supply primary current in case that CT output is open. High voltage will be generated in CT output.
※The current for above CTs is 50A same but inner hole sizes are different. Please use this for your environment.

▣ Sold Separately

◎ Display units (DS/DA-T Series)

- **DS/DA-T Series**
  (RS485 communication input type display unit) CE

DS16-□T

DS22/DA22-□T

DS40/DA40-□T

DS60/DA60-□T

※Connect RS485 communication input type display unit (DS/DA-T Series) and RS485 communication output model of TK Series, the display unit displays present value of the device without PC/PLC.

▣ Input Type and Range

Input type			Decimal point	Display	Input range (℃)	Input range (℉)
Thermocouple	K(CA)		1	K CA.H	-200 to 1350	-328 to 2463
			0.1	K CA.L	-199.9 to 999.9	-199.9 to 999.9
	J(IC)		1	J IC.H	-200 to 800	-328 to 1472
			0.1	J IC.L	-199.9 to 800.0	-199.9 to 999.9
	E(CR)		1	E CR.H	-200 to 800	-328 to 1472
			0.1	E CR.L	-199.9 to 800.0	-199.9 to 999.9
	T(CC)		1	t CC.H	-200 to 400	-328 to 752
			0.1	t CC.L	-199.9 to 400.0	-199.9 to 752.0
	B(PR)		1	b Pr	0 to 1800	32 to 3272
	R(PR)		1	r Pr	0 to 1750	32 to 3182
	S(PR)		1	S Pr	0 to 1750	32 to 3182
	N(NN)		1	n nn	-200 to 1300	-328 to 2372
	C(TT)※1		1	C tt	0 to 2300	32 to 4172
	G(TT)※2		1	G tt	0 to 2300	32 to 4172
	L(IC)		1	L IC.H	-200 to 900	-328 to 1652
			0.1	L IC.L	-199.9 to 900.0	-199.9 to 999.9
	U(CC)		1	U CC.H	-200 to 400	-328 to 752
			0.1	U CC.L	-199.9 to 400.0	-199.9 to 752.0
	Platinel II		1	PL II	0 to 1390	32 to 2534
RTD	Cu 50Ω		0.1	CU 5	-199.9 to 200.0	-199.9 to 392.0
	Cu 100Ω		0.1	CU 10	-199.9 to 200.0	-199.9 to 392.0
	JPt 100Ω		1	JPt.H	-200 to 650	-328 to 1202
			0.1	JPt.L	-199.9 to 650.0	-199.9 to 999.9
	DPt 50Ω		0.1	dPt5	-199.9 to 600.0	-199.9 to 999.9
	DPt 100Ω		1	dt t.H	-200 to 650	-328 to 1202
			0.1	dPt.L	-199.9 to 650.0	-199.9 to 999.9
	Nickel 120Ω		1	ni 12	-80 to 200	-112 to 392
Analog	Voltage	0-10V		Au 1	-1999 to 9999 (Display point will be changed according to decimal point position)	
		0-5V		Au2		
		1-5V		Au3		
		0-100mV		An u 1		
	Current	0-20mA		AnA 1		
		4-20mA		AnA2		

※1: C (TT): Same as existing W5 (TT) type sensor
※2: G (TT): Same as existing W (TT) type sensor

▣ Front Panel Display When Power Is On

When power is supplied, display will flash for 1 sec. Afterwards, model name and input sensor type will flash twice and then enter into RUN mode.

1. Whole display part

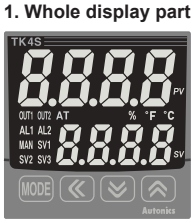

2. Model type display

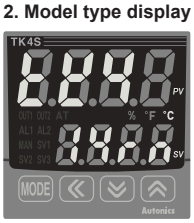

3. Input sensor type display

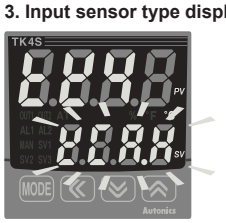

4. Run mode

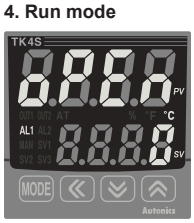

▣ Parameter Group

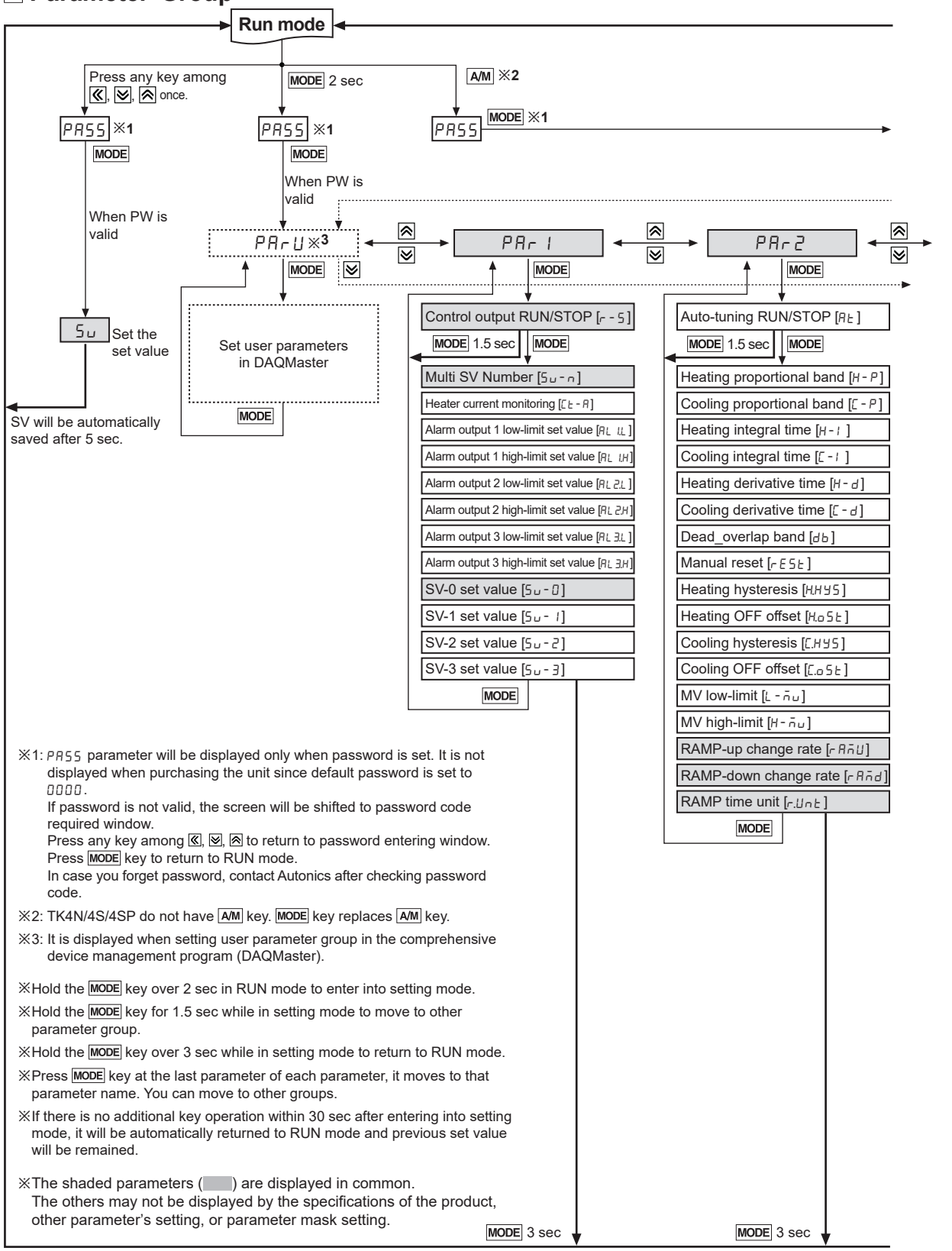

※1: PASS parameter will be displayed only when password is set. It is not displayed when purchasing the unit since default password is set to 0000.
If password is not valid, the screen will be shifted to password code required window.
Press any key among ≪, ≫, ≪ to return to password entering window.
Press MODE key to return to RUN mode.
In case you forget password, contact Autonics after checking password code.

※2: TK4N/4S/4SP do not have A/M key. MODE key replaces A/M key.

※3: It is displayed when setting user parameter group in the comprehensive device management program (DAQMaster).

※Hold the MODE key over 2 sec in RUN mode to enter into setting mode.

※Hold the MODE key for 1.5 sec while in setting mode to move to other parameter group.

※Hold the MODE key over 3 sec while in setting mode to return to RUN mode.

※Press MODE key at the last parameter of each parameter, it moves to that parameter name. You can move to other groups.

※If there is no additional key operation within 30 sec after entering into setting mode, it will be automatically returned to RUN mode and previous set value will be remained.

※The shaded parameters ( ) are displayed in common.
The others may not be displayed by the specifications of the product, other parameter's setting, or parameter mask setting.

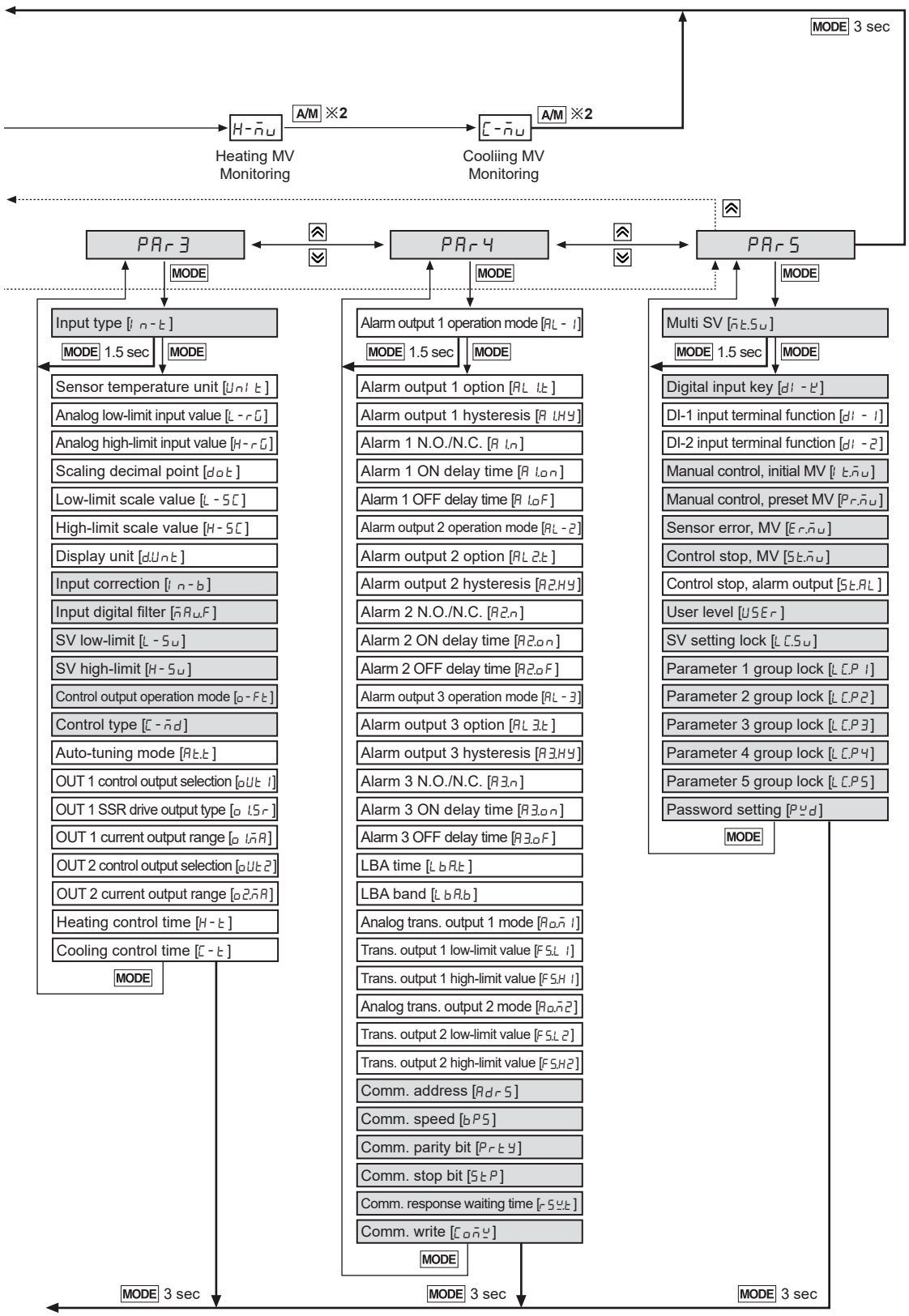
MODE 3 sec
A/M ※2
Heating MV Monitoring
A/M ※2
Cooliing MV Monitoring
PAr3
PAr4
PAr5
MODE
Input type [in-t]
MODE 1.5 sec
Sensor temperature unit [Unit]
Analog low-limit input value [L-rG]
Analog high-limit input value [H-rG]
Scaling decimal point [dot]
Low-limit scale value [L-SC]
High-limit scale value [H-SC]
Display unit [d.Unt]
Input correction [in-b]
Input digital filter [nAu.F]
SV low-limit [L-Su]
SV high-limit [H-Su]
Control output operation mode [o-Ft]
Control type [C-nd]
Auto-tuning mode [AtE]
OUT 1 control output selection [oUt1]
OUT 1 SSR drive output type [o1Sr]
OUT 1 current output range [o1nA]
OUT 2 control output selection [oUt2]
OUT 2 current output range [o2nA]
Heating control time [H-t]
Cooling control time [C-t]
MODE
MODE 3 sec
Alarm output 1 operation mode [AL-1]
MODE 1.5 sec
Alarm output 1 option [AL1t]
Alarm output 1 hysteresis [A1HY]
Alarm 1 N.O./N.C. [A1n]
Alarm 1 ON delay time [A1on]
Alarm 1 OFF delay time [A1oF]
Alarm output 2 operation mode [AL-2]
Alarm output 2 option [AL2t]
Alarm output 2 hysteresis [A2HY]
Alarm 2 N.O./N.C. [A2n]
Alarm 2 ON delay time [A2on]
Alarm 2 OFF delay time [A2oF]
Alarm output 3 operation mode [AL-3]
Alarm output 3 option [AL3t]
Alarm output 3 hysteresis [A3HY]
Alarm 3 N.O./N.C. [A3n]
Alarm 3 ON delay time [A3on]
Alarm 3 OFF delay time [A3oF]
LBA time [LbAt]
LBA band [LbAb]
Analog trans. output 1 mode [Aon1]
Trans. output 1 low-limit value [FSL1]
Trans. output 1 high-limit value [FSH1]
Analog trans. output 2 mode [Aon2]
Trans. output 2 low-limit value [FSL2]
Trans. output 2 high-limit value [FSH2]
Comm. address [Adr S]
Comm. speed [bPS]
Comm. parity bit [Prty]
Comm. stop bit [StP]
Comm. response waiting time [rSdt]
Comm. write [Conf]
MODE
MODE 3 sec
Multi SV [mt.Su]
MODE 1.5 sec
Digital input key [di-K]
DI-1 input terminal function [di-1]
DI-2 input terminal function [di-2]
Manual control, initial MV [in.mu]
Manual control, preset MV [Pr.mu]
Sensor error, MV [Er.mu]
Control stop, MV [St.mu]
Control stop, alarm output [St.AL]
User level [USEr]
SV setting lock [LC.Su]
Parameter 1 group lock [LC.P1]
Parameter 2 group lock [LC.P2]
Parameter 3 group lock [LC.P3]
Parameter 4 group lock [LC.P4]
Parameter 5 group lock [LC.P5]
Password setting [PWd]
MODE
MODE 3 sec

▣ Parameter 1 Group

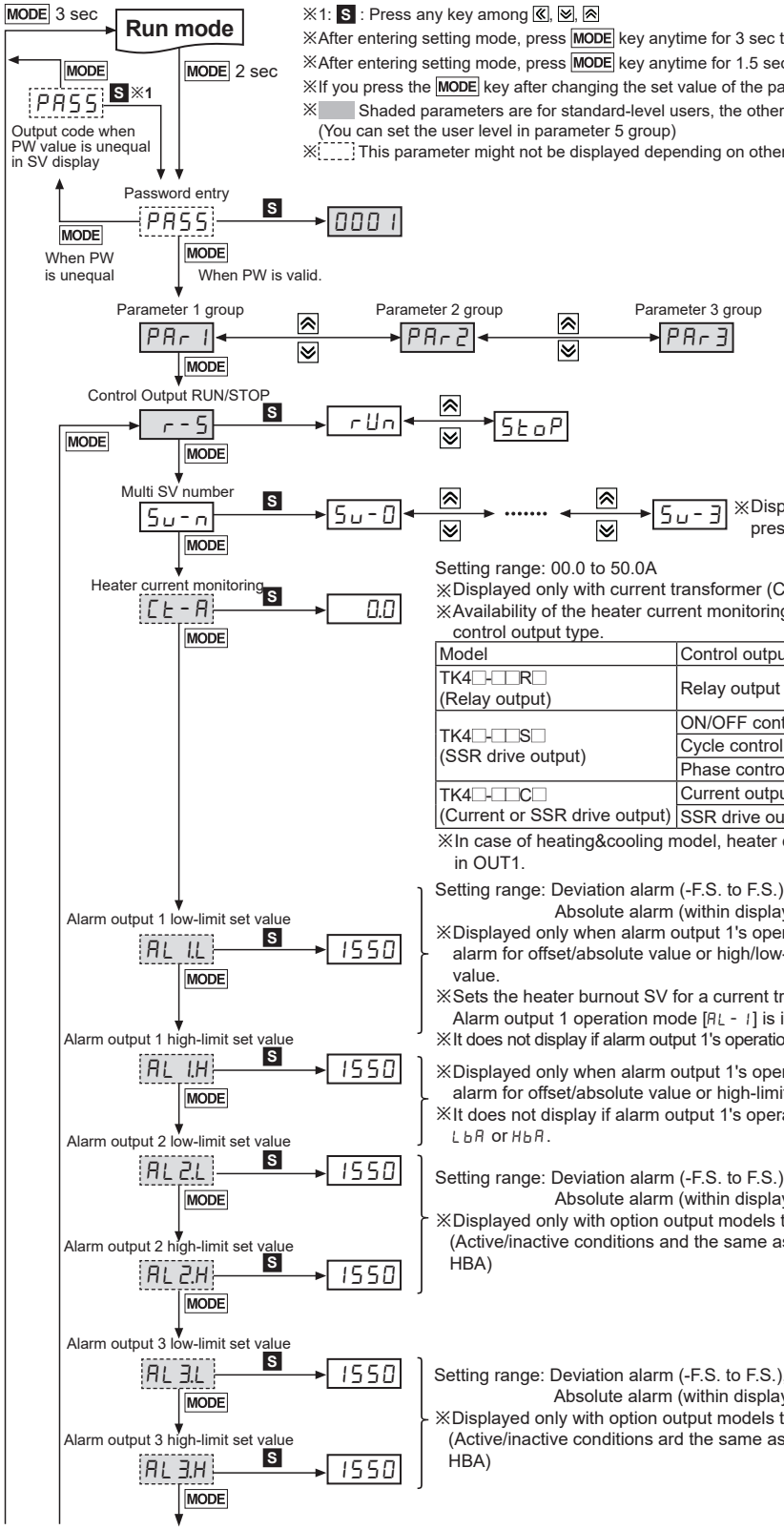

※1: S : Press any key among ≪, ≫, ≪

※After entering setting mode, press MODE key anytime for 3 sec to return to Run mode.

※After entering setting mode, press MODE key anytime for 1.5 sec to go to the concerned group name.

※If you press the MODE key after changing the set value of the parameter the set value will be stored.

※ Shaded parameters are for standard-level users, the others are for high-level users.
(You can set the user level in parameter 5 group)

※ This parameter might not be displayed depending on other parameter settings.

Setting range: 00.0 to 50.0A

※Displayed only with current transformer (CT) input models (Expect for TK4SP)

※Availability of the heater current monitoring function is different by model and control output type.

Model	Control output type	Heater current monitoring
TK4□-□□R□ (Relay output)	Relay output	O
TK4□-□□S□ (SSR drive output)	ON/OFF control [Stnd]	O
	Cycle control [CycL]	X
	Phase control [PHAS]	X
TK4□-□□C□ (Current or SSR drive output)	Current output [Curr]	X
	SSR drive output [SSr]	O

※In case of heating&cooling model, heater current monitoring function can be used in OUT1.

Setting range: Deviation alarm (-F.S. to F.S.),
Absolute alarm (within display range), Unit (℃/℉)

※Displayed only when alarm output 1's operation mode [AL - 1] is set to low-limit alarm for offset/absolute value or high/low-limit alarm/reverse alarm for offset value.

※Sets the heater burnout SV for a current transformer (with option inputs) when Alarm output 1 operation mode [AL - 1] is in heater burnout alarm [HbA].

※It does not display if alarm output 1's operation mode [AL - 1] is set to oFF, SbA or LbA.

※Displayed only when alarm output 1's operation mode [AL - 1] is set to high-limit alarm for offset/absolute value or high-limit alarm/reserve alarm for offset value.

※It does not display if alarm output 1's operation mode [AL - 1] is set to oFF, SbA, LbA or HbA.

Setting range: Deviation alarm (-F.S. to F.S.),
Absolute alarm (within display range), Unit (℃/℉)

※Displayed only with option output models that support alarm output 2. (Active/inactive conditions and the same as alarm output 1 with the exception for HBA)

Setting range: Deviation alarm (-F.S. to F.S.),
Absolute alarm (within display range), Unit (℃/℉)

※Displayed only with option output models that support alarm output 3. (Active/inactive conditions ard the same as alarm output 1 with the exception for HBA)

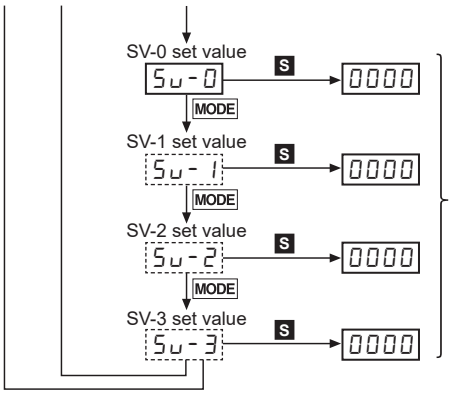

Setting range: L-SU to H-SU, unit (℃/℉)
※The number of multi SVs [SU0 to SU3] set at Multi SV [n1t.SU] are displayed.

■ Parameter 2 Group

※1: S : Press any key among ≪, ≫, ≫
※After entering setting mode, press MODE key anytime for 3 sec to return to Run mode.
※After entering setting mode, press MODE key anytime for 1.5 sec to go to the concerned group name.
※If you press the MODE key after changing the set value of the parameter the set value will be stored.
※ Shaded parameters are for standard-level users, the others are for high-level users.
(You can set the user level in parameter 5 group)
※ This parameter might not be displayed depending on other parameter settings.

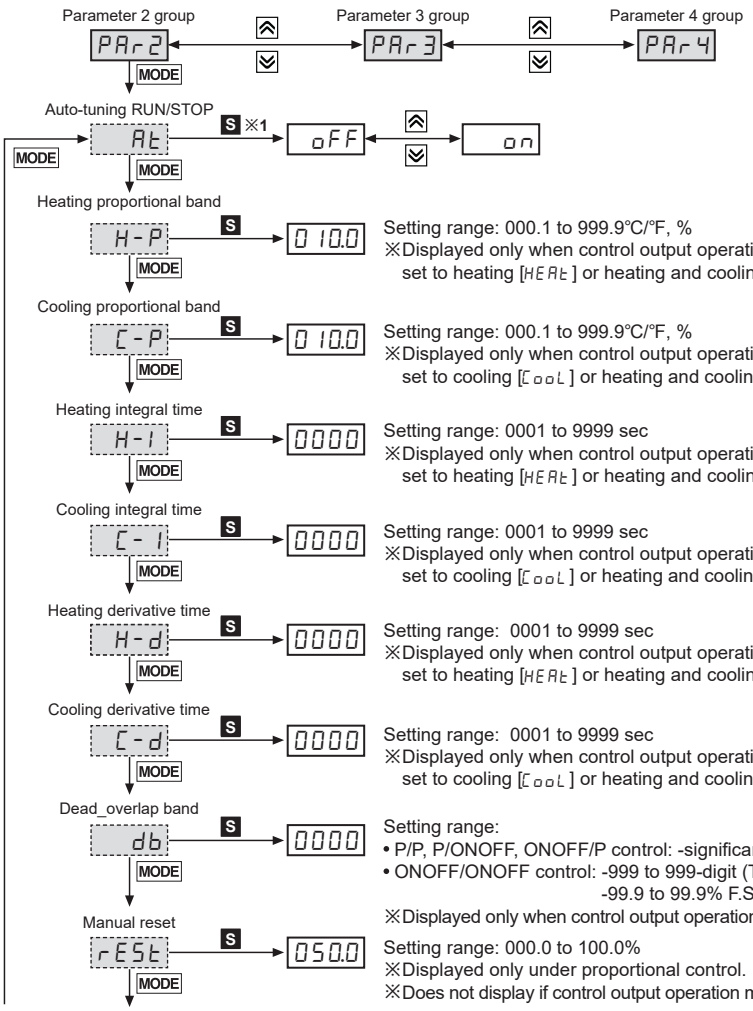

Setting range: 000.1 to 999.9℃/℉, %
※Displayed only when control output operation mode [o-Ft] is set to heating [HEAt] or heating and cooling [H-C].

Setting range: 000.1 to 999.9℃/℉, %
※Displayed only when control output operation mode [o-Ft] is set to cooling [CooL] or heating and cooling [H-C].

Setting range: 0001 to 9999 sec
※Displayed only when control output operation mode [o-Ft] is set to heating [HEAt] or heating and cooling [H-C].

Setting range: 0001 to 9999 sec
※Displayed only when control output operation mode [o-Ft]is set to cooling [CooL] or heating and cooling [H-C].

Setting range: 0001 to 9999 sec
※Displayed only when control output operation mode [o-Ft]is set to heating [HEAt] or heating and cooling [H-C].

Setting range: 0001 to 9999 sec
※Displayed only when control output operation mode [o-Ft]is set to cooling [CooL] or heating and cooling [H-C].

※Displayed only when temperature control type [C-nd] is set to PID control.

Setting range:
• P/P, P/ONOFF, ONOFF/P control: -significant proportion to 0.0 to + significant proportion
• ONOFF/ONOFF control: -999 to 999-digit (Temp. H), -199.9 to 999.9-digit (Temp. L), -99.9 to 99.9% F.S. (Analog)
※Displayed only when control output operation mode [o-Ft] is set to heating and cooling [H-C].

Setting range: 000.0 to 100.0%
※Displayed only under proportional control.
※Does not display if control output operation mode [o-Ft] is set to heating and cooling [H-C]).

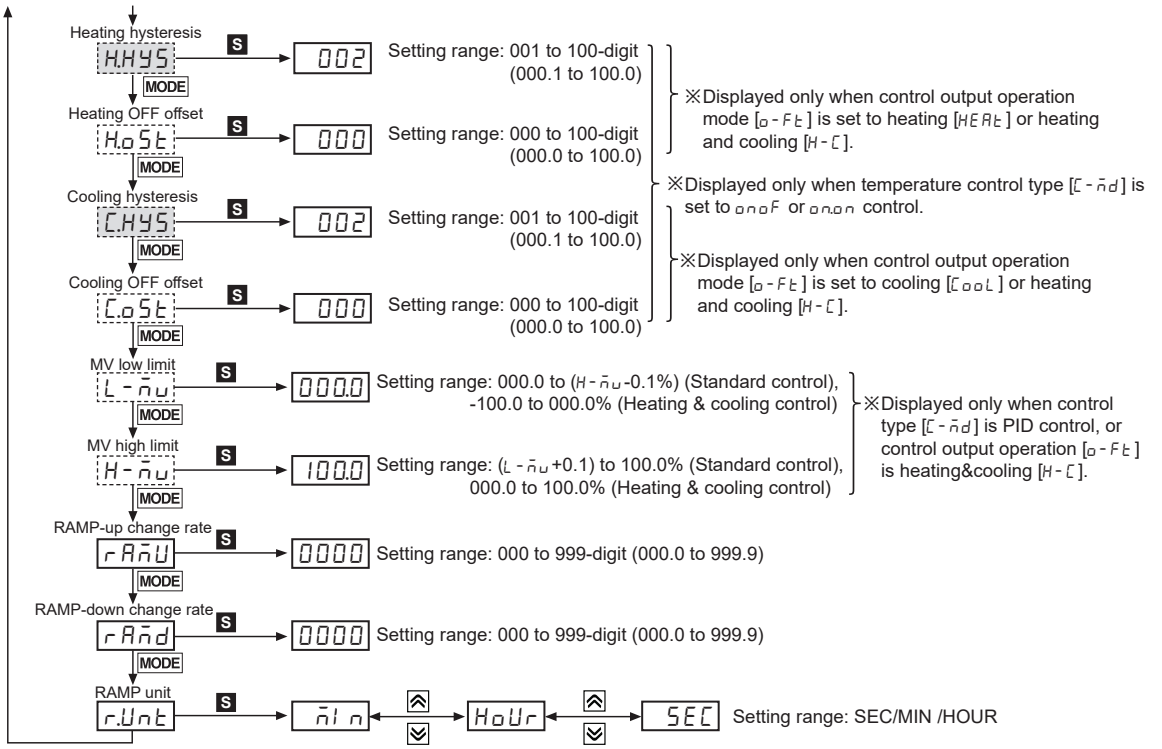

■ Parameter 3 Group

※1: S : Press any key among ≪, ≫, ≪

※After entering setting mode, press MODE key anytime for 3 sec to return to Run mode.

※After entering setting mode, press MODE key anytime for 1.5 sec to go to the concerned group name.

※If you press the MODE key after changing the setting value of the parameter the setting value will be stored.

※ Shaded parameters are for standard-level users, the others are for high-level users. (You can set the user level in parameter 5 group)

※ This parameter might not be displayed depending on other parameter settings.

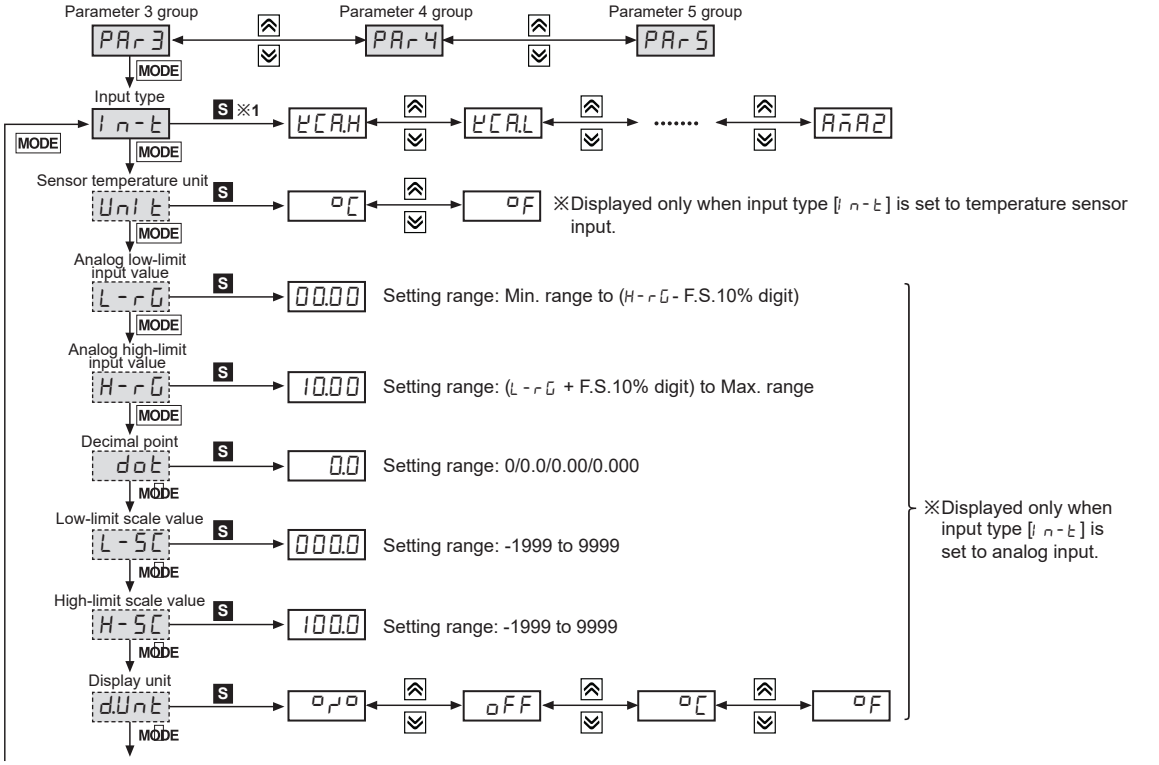

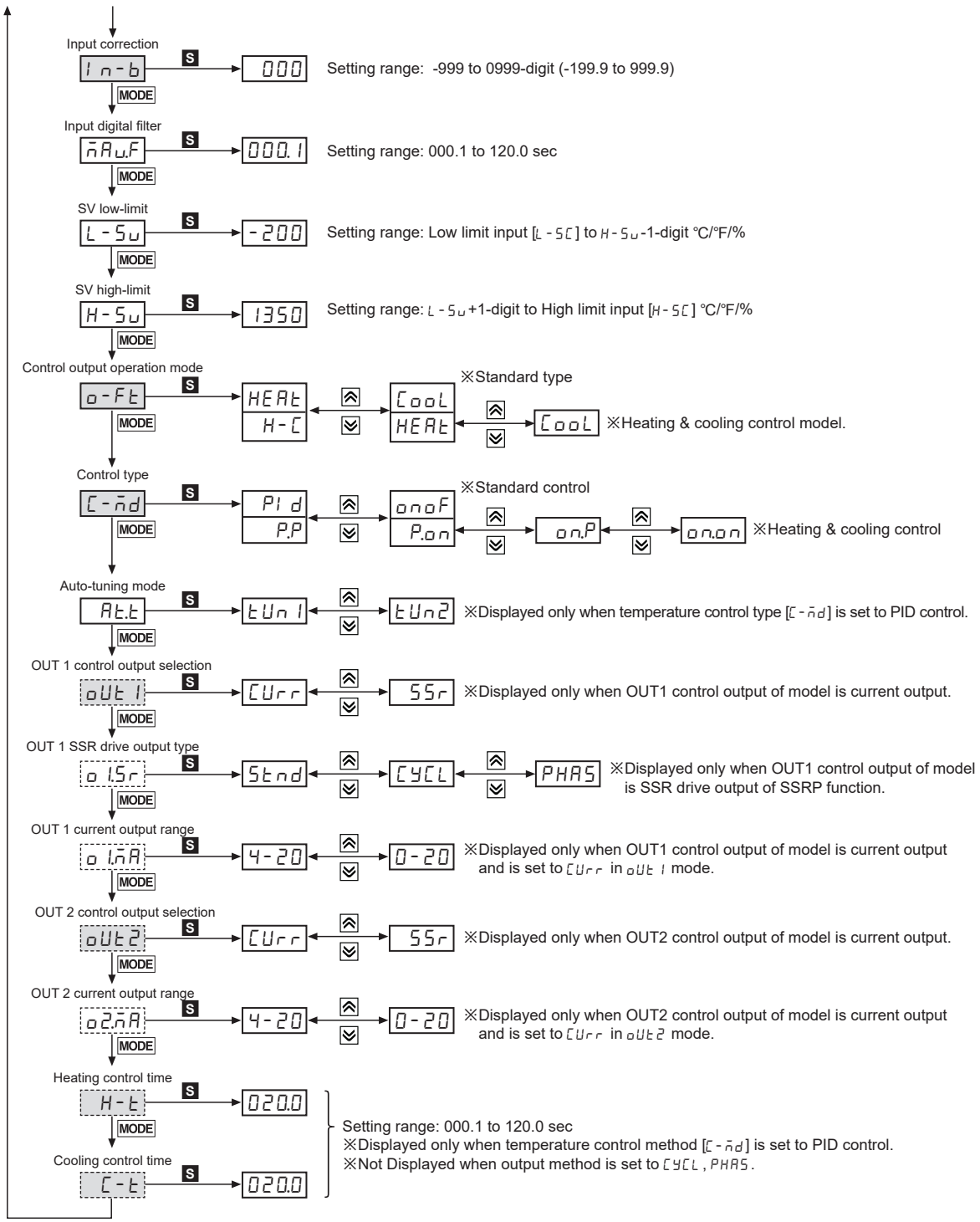

※OUT1, OUT2 output:

- In case that OUT1,OUT2 output is relay output type , oUt1, o1Sr, o1nA, oUt2, o2Sr, o2nA parameter are not displayed.
- In case that OUT1,OUT2 output is current + SSR drive output type, when OUT1,OUT2 output is set to SSr.
  : Output method of o1Sr, o2Sr is held in Stnd and parameter is not displayed.
- In case that OUT1, output is SSR drive output model of SSRP function and OUT2 output is current + SSR drive output
  - oUt1, o1nA are not displayed.
  - o1Sr can set to Stnd, CYCL, PHAS
  - When o2Sr is set to SSr it is held in Stnd and parameter is not displayed.

▣ Parameter 4 Group

※1: S : Press any key among ≪, ≫, ≪
※After entering setting mode, press MODE key anytime for 3 sec to return to Run mode.
※After entering setting mode, press MODE key anytime for 1.5 sec to go to the concerned group name.
※If you press the MODE key after changing the set value of the parameter the set value will be stored.
※ Shaded parameters are for standard-level users, the others are for high-level users.
(You can set the user level in parameter 5 group)
※ This parameter might not be displayed depending on other parameter settings.

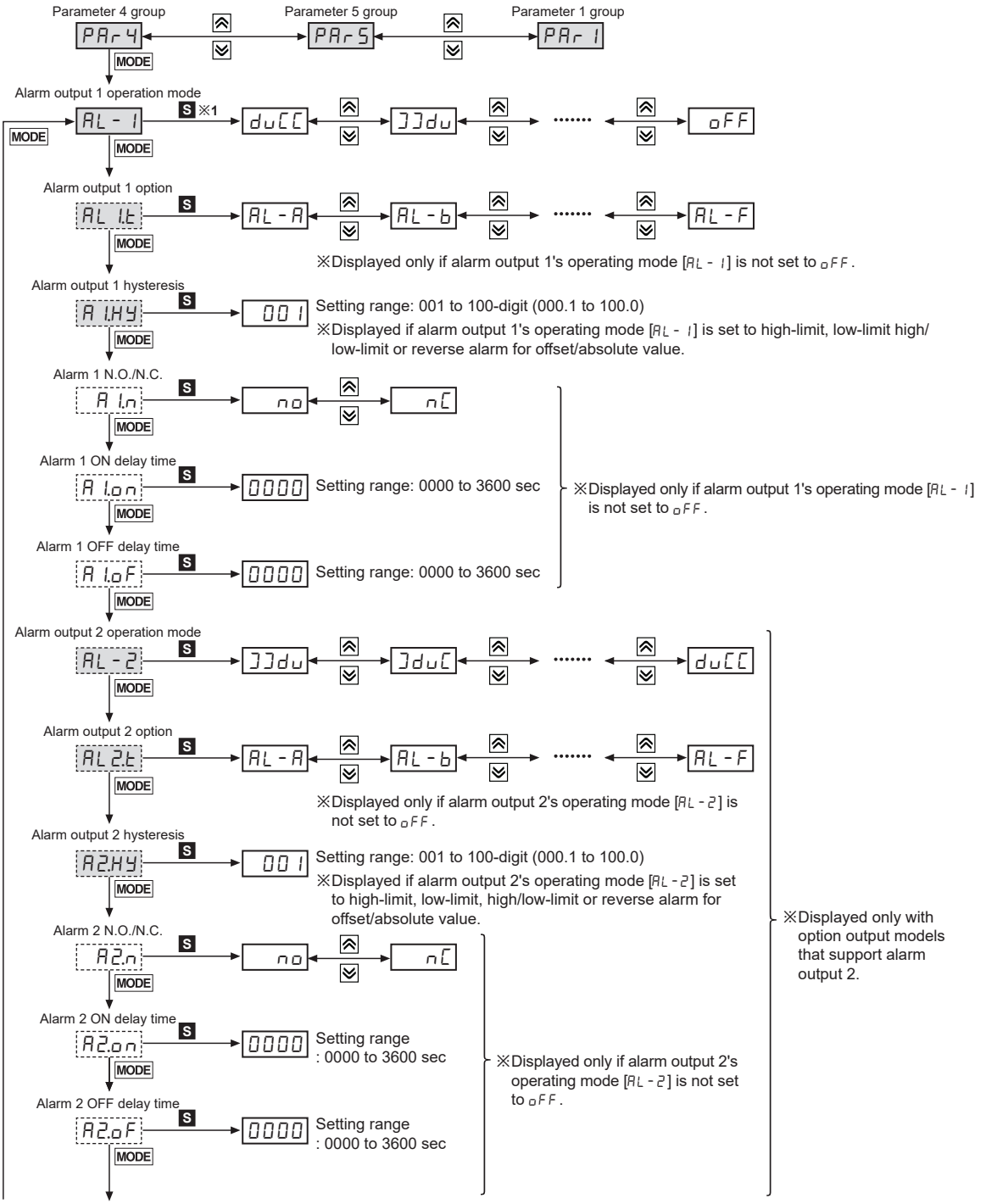

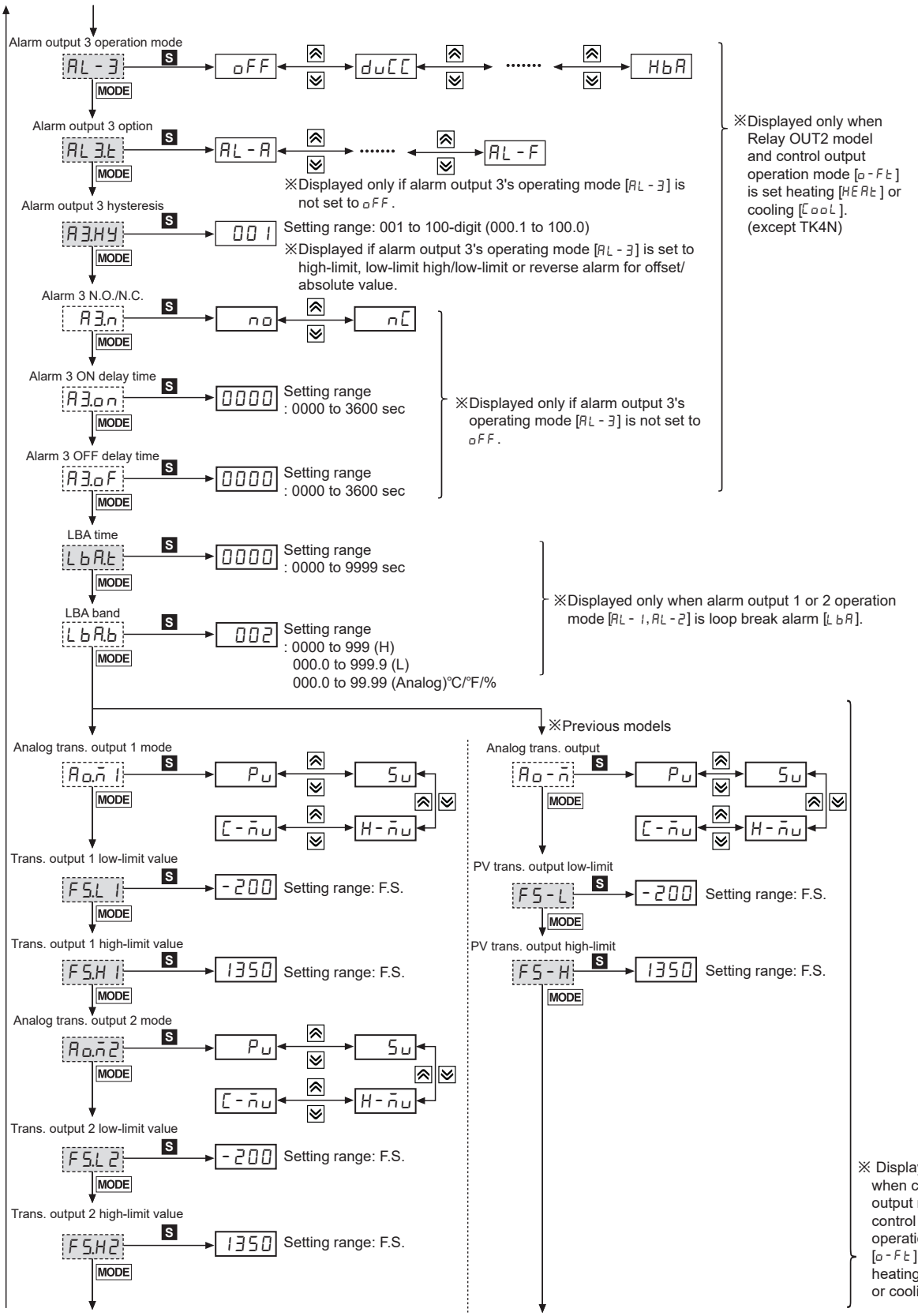
Alarm output 3 operation mode
AL-3
S
MODE
oFF
dvCC
HbA
※Displayed only when Relay OUT2 model and control output operation mode [o-Ft] is set heating [HEAt] or cooling [CooL]. (except TK4N)
Alarm output 3 option
AL3t
AL-A
AL-F
※Displayed only if alarm output 3's operating mode [AL-3] is not set to oFF.
Alarm output 3 hysteresis
A3HY
001
Setting range: 001 to 100-digit (000.1 to 100.0)
※Displayed if alarm output 3's operating mode [AL-3] is set to high-limit, low-limit high/low-limit or reverse alarm for offset/ absolute value.
Alarm 3 N.O./N.C.
A3n
no
nC
Alarm 3 ON delay time
A3on
0000
Setting range : 0000 to 3600 sec
Alarm 3 OFF delay time
A3oF
0000
Setting range : 0000 to 3600 sec
※Displayed only if alarm output 3's operating mode [AL-3] is not set to oFF.
LBA time
LbAt
0000
Setting range : 0000 to 9999 sec
LBA band
LbAb
002
Setting range : 0000 to 999 (H) 000.0 to 999.9 (L) 000.0 to 99.99 (Analog)℃/℉/%
※Displayed only when alarm output 1 or 2 operation mode [AL-1,AL-2] is loop break alarm [LbA].
※Previous models
Analog trans. output 1 mode
Ao.n1
Pv
Sv
C-nv
H-nv
Trans. output 1 low-limit value
FSL1
-200
Setting range: F.S.
Trans. output 1 high-limit value
FSH1
1350
Setting range: F.S.
Analog trans. output 2 mode
Ao.n2
Pv
Sv
C-nv
H-nv
Trans. output 2 low-limit value
FSL2
-200
Setting range: F.S.
Trans. output 2 high-limit value
FSH2
1350
Setting range: F.S.
Analog trans. output
Ao-n
Pv
Sv
C-nv
H-nv
PV trans. output low-limit
FS-L
-200
Setting range: F.S.
PV trans. output high-limit
FS-H
1350
Setting range: F.S.
※ Displayed only when current output model and control output operation mode [o-Ft] is set heating [HEAt] or cooling[CooL].

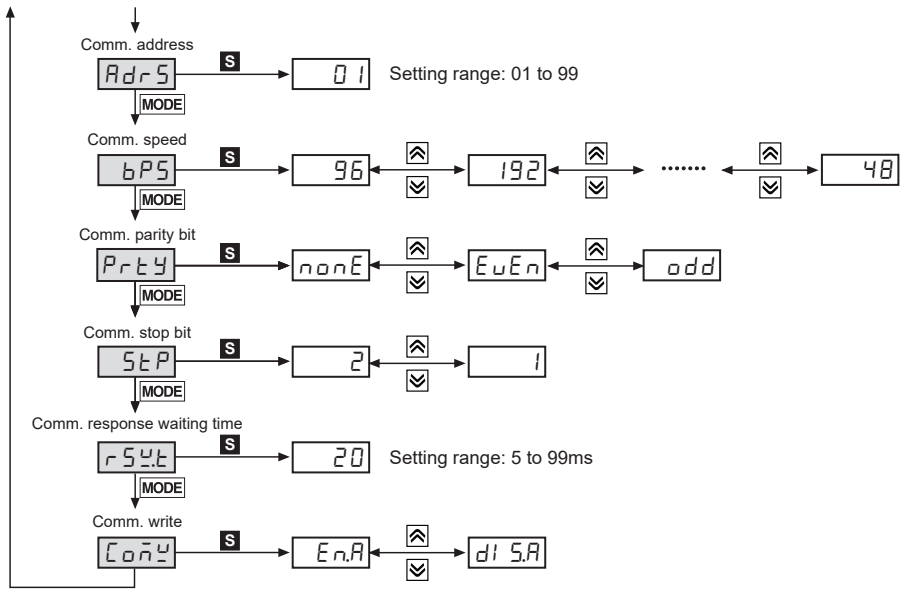

■ Parameter 5 Group

※1: S : Press any key among ≪, ≫, ≪
※After entering setting mode, press MODE key anytime for 3 sec to return to Run mode.
※After entering setting mode, press MODE key anytime for 1.5 sec to go to the concerned group name.
※If you press the MODE key after changing the setting value of the parameter the setting value will be stored.
※ Shaded parameters are for standard-level users, the others are for high-level users.
(You can set the user level in parameter 5 group)
※ This parameter might not be displayed depending on other parameter settings.

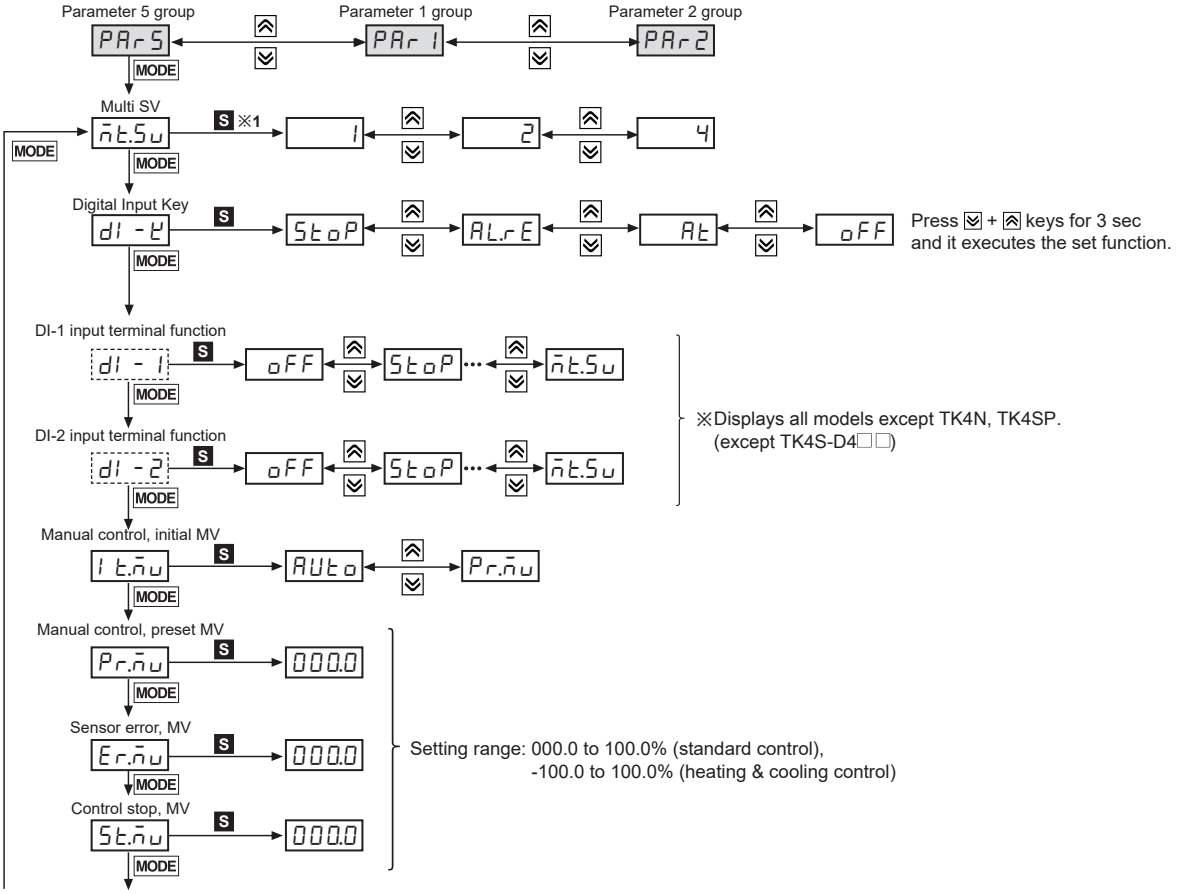

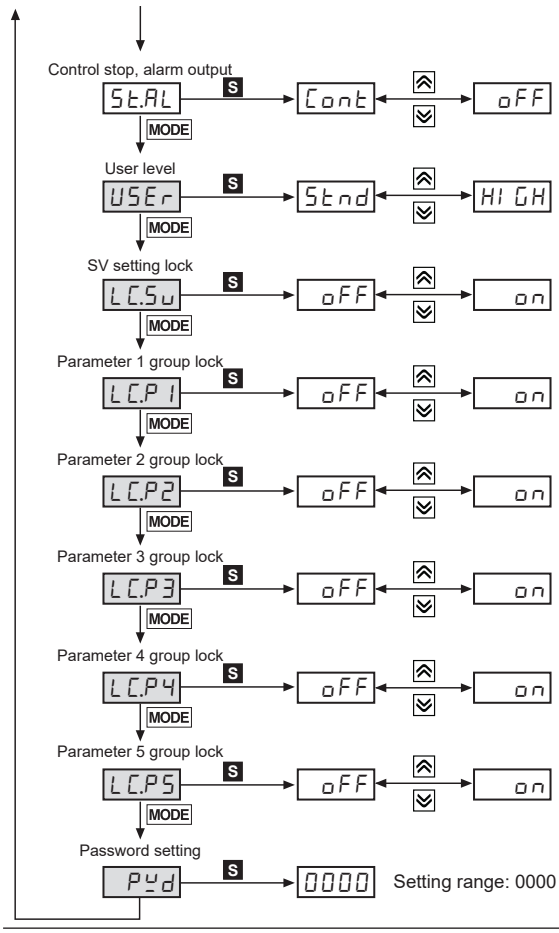

■ SV Setting

You can set the temperature to control with ≪, ≫, ≪ keys.
Setting range is within SV low-limit value [L-Su] to SV high-limit value [H-Su].

E.g.) In case of changing set temperature from 210ºC to 250ºC

1

Press any key among ≪, ≫, ≪ key in RUN mode, the right digit at SV display flashes and it enters to SV setting.

2 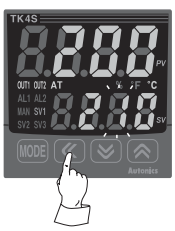

Press ≪ key to move the desired digit.
($10^0 \rightarrow 10^1 \rightarrow 10^2 \rightarrow 10^3 \rightarrow 10^0$)

3

Press ≫ or ≪ key to move the desired number
(1 → 5).

4

Press MODE key to save the value and it controls with this set value.
(even though there is no key input for over 3 sec, it saves automatically.)

■ Parameter Reset

Press ≪, ≫, ≪ to reset all parameters in memory to default value.
Set InIt parameter to YES to reset all parameters.
In case password function is on, it is required to enter valid password to reset parameters.
Password is also reset.

▣ Factory Default

● SV setting [SU]

Parameter	Factory default
SU	0

● Password input parameter

Parameter	Factory default
PASS	0001

● Parameter 1 group [PAr 1]

Parameter	Factory default	Parameter	Factory default	Parameter	Factory default	Parameter	Factory default
r-S	rUn	AL 1H	1550	AL3H	1550	SU-3	0000
SU-n	SU-0	AL2L	1550	SU-0	0000		
Ct-A	0.0	AL2H	1550	SU- 1	0000		
AL 1L	1550	AL3L	1550	SU-2	0000		

● Parameter 2 group [PAr 2]

Parameter	Factory default	Parameter	Factory default	Parameter	Factory default	Parameter	Factory default
At	oFF	H-d	0000	HoSt	000	rAnU	000
H-P	0 10.0	C-d	0000	C.HYS	002	rAnd	000
C-P	0 10.0	db	0000	C.oSt	000	r.Unt	An n
H- 1	0000	rESt	050.0	L-nU	-100.0		
C- 1	0000	HHYS	002	H-nU	100.0		

● Parameter 3 group [PAr 3]

Parameter	Factory default	Parameter	Factory default	Parameter	Factory default	Parameter	Factory default
In-t	tCAH	H-SC	100.0	o-Ft	HEAt (standard)	o 1Sr	Stnd
Unit	°C	d.Unt	°ro		H-C (heating & cooling)	o 1nA	4-20
L-rG	00.00	In-b	0000	C-nd	PId (standard)	oUt2	CUrr
H-rG	10.00	nAu.F	000.1		P.P (heating & cooling)	o2.nA	4-20
dot	0.0	L-SU	-200	AtE	tUn 1	H-t	020.0 (relay) 002.0 (SSR)
L-SC	000.0	H-SU	1350	oUt 1	CUrr	C-t	

● Parameter 4 group [PAr 4]

Parameter	Factory default	Parameter	Factory default	Parameter	Factory default	Parameter	Factory default
AL- 1	duCC	A2n	no	LbAt	0000	bPS	96
AL 1t	AL-A	A2on	0000	LbAb	002 (003※1)	PrtY	nonE
A 1HY	001	A2oF	0000	Ao.n 1 (Ao-n※1)	Pu	StP	2
A 1n	no	AL-3	oFF	FS.L 1 (FS-L※1)	-200	rSYt	20
A 1on	0000	AL3.t	AL-A	FS.H 1 (FS-H※1)	1350	ConY	En.A
A 1oF	0000	A3.HY	001	Ao.n2	Pu		
AL-2	JJdu	A3n	no	FS.L2	-200		
AL2t	AL-A	A3on	0000	FS.H2	1350		
A2HY	001	A3oF	0000	AdrS	01		

● Parameter 5 group [PAr 5]

Parameter	Factory default	Parameter	Factory default	Parameter	Factory default	Parameter	Factory default
nt.Su	1	Pr.nu	000.0	LC.Su	oFF	LC.PS	oFF
dI-E	StoP	Er.nu	000.0	LC.P 1	oFF	PYd	0000
dI- 1	oFF	St.nu	000.0	LC.P2	oFF		
dI-2	oFF	St.AL	Cont	LC.P3	oFF		
I t.nu	AUto	USEr	Stnd	LC.P4	oFF		

※ shaded parameters are only for the new model.
※1: This parameter is for previous models.

▣ Alarm

◎ Alarm operation

Mode	Name	Alarm operation	Description
oFF	—	—	No alarm output
duCC	Deviation high-limit alarm	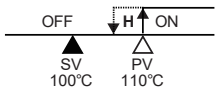 High deviation: Set as 10℃ 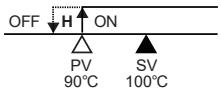 High deviation: Set as -10℃	If deviation between PV and SV as high-limit is higher than set value of deviation temperature, the alarm output will be ON.
]]du	Deviation low-limit alarm	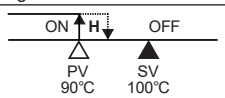 Lower deviation: Set as 10℃ 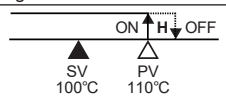 Lower deviation: Set as -10℃	If deviation between PV and SV as low-limit is higher than set value of deviation temperature, the alarm output will be ON.
]duC	Deviation high/low-limit alarm	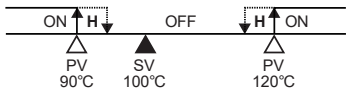 Lower deviation: Set as 10℃, High deviation: Set as 20℃	If deviation between PV and SV as high/low-limit is higher than set value of deviation temperature, the alarm output will be ON.
[du]	Deviation high/low-limit reserve alarm	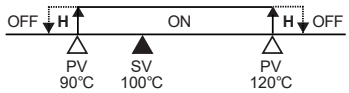 Lower deviation: Set as 10℃, High deviation: Set as 20℃	If deviation between PV and SV as high/low-limit is higher than set value of deviation temperature, the alarm output will be OFF.
PuCC	Absolute value high limit alarm	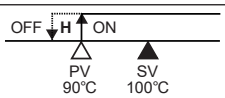 Absolute-value Alarm: Set as 90℃ 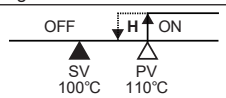 Absolute-value Alarm: Set as 110℃	If PV is higher than the absolute value, the output will be ON.
]]Pu	Absolute value low limit alarm	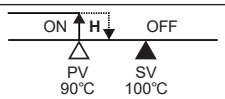 Absolute-value Alarm: Set as 90℃ 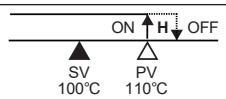 Absolute-value Alarm: Set as 110℃	If PV is lower than the absolute value, the output will be ON.
LbA	Loop break Alarm	—	It will be ON when it detects loop break.
SbA	Sensor break Alarm	—	It will be ON when it detects sensor disconnection.
HbA	Heater break alarm	—	It will be ON when CT detects heater break.

※H: Alarm □ output hysteresis [A□.HY]

※Availability of the heater burnout alarm function is different by model and control output type.

Model	Control output type	Heater burnout alarm
TK4□-□□R□ (Relay output)	Relay output	O
TK4□-□□S□ (SSR drive output)	ON/OFF control [Stnd]	O
	Cycle control [CYCL]	X
	Phase control [PHAS]	X
TK4□-□□C□ (Current or SSR drive output)	Current output [CUrr]	X
	SSR drive output [SSr]	O

※In case of heating&cooling model, heater burnout alarm function can be used in OUT1.

◎ Alarm option

Mode	Name	Description
AL-A	Standard alarm	If it is an alarm condition, alarm output is ON. If it is a clear alarm condition, alarm output is OFF.
AL-b	Alarm latch	If it is an alarm condition, alarm output is ON and maintains ON status.
AL-C	Standby sequence 1	First alarm condition is ignored and from second alarm condition, standard alarm operates. When power is supplied and it is an alarm condition, this first alarm condition is ignored and from the second alarm condition, standard alarm operates.
AL-d	Alarm latch and standby sequence 1	If it is an alarm condition, it operates both alarm latch and standby sequence. When power is supplied and it is an alarm condition, this first alarm condition is ignored and from the second alarm condition, alarm latch operates.
AL-E	Standby sequence 2	First alarm condition is ignored and from second alarm condition, standard alarm operates. When re-applied standby sequence and if it is alarm condition, alarm output does not turn ON. After clearing alarm condition, standard alarm operates.
AL-F	Alarm latch and standby sequence 2	Basic operation is same as alarm latch and standby sequence 1. It operates not only by power ON/OFF, but also alarm set value, or alarm option changing. When re-applied standby sequence and if it is alarm condition, alarm output does not turn ON. After clearing alarm condition, alarm latch operates.

※Condition of re-applied standby sequence for standby sequence 1, alarm latch and standby sequence 1: Power ON
Condition of re-applied standby sequence for standby sequence 2, alarm latch and standby sequence 2: Power ON, changing set temperature, alarm temperature [AL 1, AL2] or alarm operation [AL - 1, AL - 2], switching STOP mode to RUN mode.

▣ Functions

◎ Parameter mask

- This function is able to hide unnecessary parameters to user environment or less frequently used parameters in parameter setting group. You can set this in the comprehensive device management program (DAQMaster).
- Though masked parameters are not displayed in parameter setting group, the parameter set values are applied. For more information, refer to the DAQMaster user manual.
- Visit our web site (www.autonics.com) to download the DAQMaster program and the user manual.

※E.g.)The above is masking auto tuning [AT], cooling proportional band [C-P], cooling integral time [C-I], cooling derivative time [C-d] parameters in parameter 2 group.

Before applying mask: PAr2 → AT → H-P → C-P → H-I → C-I → H-d → C-d •••

After applying mask: PAr2 → H-P → H-I → H-d •••

※This function is for new model.

◎ User parameter group [PArU] setting

- This function is able to set the frequently used parameters to the user parameter group. You can quickly and easily set parameter settings.
- User parameter group can have up to 30 parameters in the comprehensive device management program (DAQMaster). For more information, refer to the DAQMaster user manual.
- Visit our website (www.autonics.com) to download the DAQMaster program and the user manual.

※E.g.)The above is setting user parameter group in the DAQMaster with alarm output 1 low-limit value [AL 1.L], alarm output 1 high-limit value [AL 1.H], SV-0 set value [Su-0] parameter of parameter 1 group, heating hysteresis [H.HYS], cooling hysteresis [C.HYS] parameters of parameter 2 group, input correction [In-b] parameter of parameter 3 group, alarm output 1 hysteresis [A1.HY], alarm output 2 hysteresis [A2.HY] parameters of parameter 4 group.

RUN

PArU → PAr1 ••• PAr5

AL 1L → AL 1H → Su-0 → H.HYS → C.HYS → In-b → A1.HY → A2.HY

※This function is for new model.

◎ Auto tuning [AT]

In PID control, auto-tuning determines the control subject's thermal characteristics and thermal response rate, and then determines the necessary PID time constant. Application of the PID time constant realizes fast response and high precision temperature control.

- Auto-tuning automatically stores PID time constants upon termination. These PID time constants can then be modified by the user to suit their usage environment.
- When auto-tuning is in progress, the AT indicator located on the front of the controller flashes in 1 second intervals. When auto-tuning finishes, the AT indicator automatically goes off and the auto-tuning parameter will return to OFF.

Set value	Descriptions
oFF	Auto tuning end
on	Auto tuning run

Setting group	Parameter	Setting range	Factory default	Unit
PAr2	AT	oFF/on	oFF	—

※Manual interruption or a sensor disconnection error when auto-tuning is in progress restores the PID time constant to the value used prior to the auto-tuning session.

※Auto-tuning continues to run even if the temperature reading exceeds or falls below the input range.

※When auto-turning is in progress, parameters can only be referenced and not altered.

※Auto-tuning is not available in manual control.

◎ Control output operation mode [o-Ft]

- Control output modes for general temperature control include heating, cooling, and heating and cooling.
- Heating control and cooling control are mutually opposing operations with inverse outputs.
- The PID time constant varies based on the controlled objects during PID control.

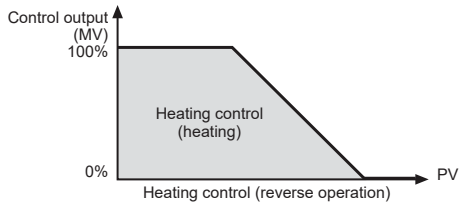

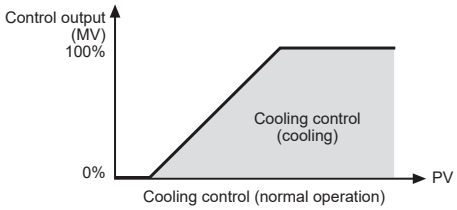

Setting group	Parameter	Setting range	Factory default	Unit
PAr3	o-Ft	Standard model HEAt/CooL	HEAt	—
		Heating & Cooling model HEAt/CooL/H-C	H-C	—

● Heating control [HEAt]

Heating control mode: the output will be provided in order to supply power to the load (heater) if PV (Present Value) falls below SV (Set value).

● Cooling control [CooL]

Cooling control mode: the output will be provided in order to supply power to the load (cooler) if PV (Present Value) rises above SV (Set value).

● Heating and cooling control [H-C]

Heating and cooling control mode: heating and cooling with a single temperature controller when it is difficult to control subject temperature with only heating or cooling.

Heating and cooling control mode controls the object using different PID time constants for each heating and cooling.

It is also possible to set heating and cooling control in both PID control or ON/OFF control mode.

Heating/cooling output can be selected among Relay output, SSR drive output and current output depending on model types chosen according to your application environment.

(Note that only standard SSR control is available for SSR drive output in OUT2.)

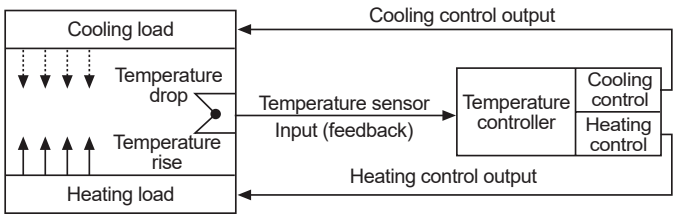

※For heating and cooling control, OUT1 control output is dedicated to heating control and OUT2 control output to cooling control.

◎ Control output (OUT1/OUT2) selection [oUt1/oUt2]

- In case of selecting the Models with current control output, both current and SSR drive outputs are available. You can therefore choose the right output type depending on application environments.
  - OUT1: Selects OUT1 control output.
  - OUT2: Selects OUT2 control output.

Setting group	Parameter	Setting range	Factory default	Unit
PAr3	oUt1	SSr/CUrr	SSr	—
	oUt2			

◎ Communication output

It is for parameter setting and monitoring via external devices (PC, PLC, etc.).

• Interface

Comm. protocol	Modbus RTU	Comm. speed	2400, 4800, 9600, 19200, 38400 bps
Connection type	RS485	Comm. response wait time	5 to 99 ms
Application standard	Compliance with EIA RS485	Start bit	1-bit (fixed)
Max. connection	31 units (address: 01 to 99)	Data bit	8-bit (fixed)
Synchronous method	Asynchronous	Parity bit	None, Odd, Even
Comm. method	Two-wire half duplex	Stop bit	1-bit, 2-bit
Comm. distance	Max. 800m		

※It is not allowed to set overlapping communication address at the same communication line.
Use twisted pair wire for RS485 communication.

• Application of system organization

※Only for RS485 communication output model.

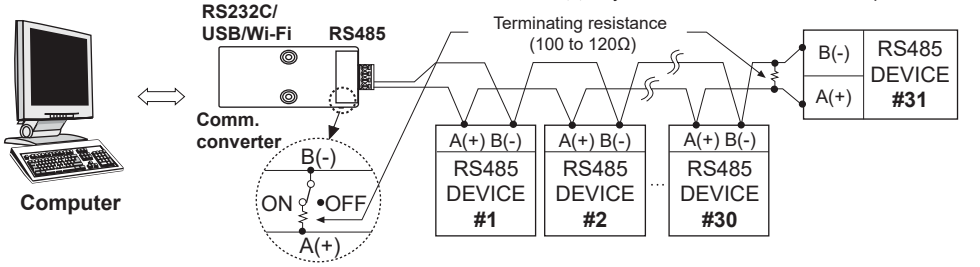

※It is recommended to use Autonics communication converter; SCM-WF48 (Wi-Fi to RS485·USB wireless communication converter, sold separately), SCM-US48I (USB to RS485 converter, sold separately), SCM-38I (RS232C to RS485 converter, sold separately), SCM-US (USB to Serial converter, sold separately).
Please use twisted pair wire, which is suitable for RS485 communication, for SCM-WF48, SCM-US48I and SCM-38I.

◎ For more information, refer to the user manual.

▣ Proper Usage

◎ Simple "Error" diagnosis

● When the load (heater etc) is not operated

Please check operation of the OUT indicator located in front panel of the unit.

If the OUT indicator does not operate, please check the parameter of all programmed mode.
If OUT indicator is operating, please check the output (Relay, SSR drive voltage) after separating output line from the unit.

● When it displays oPEn during operation

This is a warning that external sensor is open.
Please turn off the power and check the wire state of the sensor. If sensor is not open disconnect sensor line from the unit and short the input +, - terminal. Turn on the power of the unit and check the controller displays room temperature.

If this unit cannot display room temperature, this unit is broken. Please remove this unit and contact our service center. (When the input mode is thermocouple, it is available to display room temperature.)

● In case of indicating "Error" in display

This Error message is indicated in case of damaging inner chip program data by outer strong noise.

In this case, please send the unit to our after service center after removing the unit from system.

Noise protection is designed in this unit, but it does not stand up strong noise continuously. If bigger noise than specified (Max. 2kV) flows in the unit, it can be damaged.

◎ Cautions during use

- Follow instructions in 'Cautions during Use'. Otherwise, It may cause unexpected accidents.
- Check the polarity of the terminals before wiring the temperature sensor.
  For RTD temperature sensor, wire it as 3-wire type, using cables in same thickness and length.
  For thermocouple (CT) temperature sensor, use the designated compensation wire for extending wire.
- Keep away from high voltage lines or power lines to prevent inductive noise.
  In case installing power line and input signal line closely, use line filter or varistor at power line and shielded wire at input signal line.
  Do not use near the equipment which generates strong magnetic force or high frequency noise.
- Do not apply excessive power when connecting or disconnecting the connectors of the product.
- Install a power switch or circuit breaker in the easily accessible place for supplying or disconnecting the power.
- Do not use the unit for other purpose (e.g. voltmeter, ammeter), but temperature controller.
- When changing the input sensor, turn off the power first before changing.
  After changing the input sensor, modify the value of the corresponding parameter.
- 24VAC, 24-48VDC power supply should be insulated and limited voltage/current or Class 2, SELV power supply device.
- Do not overlapping communication line and power line.
  Use twisted pair wire for communication line and connect ferrite bead at each end of line to reduce the effect of external noise.
- Make a required space around the unit for radiation of heat.
  For accurate temperature measurement, warm up the unit over 20 min after turning on the power.
- Make sure that power supply voltage reaches to the rated voltage within 2 sec after supplying power.
- Do not wire to terminals which are not used.
- This unit may be used in the following environments.
  ①Indoors (in the environment condition rated in 'Specifications') ②Altitude max. 2,000m
  ③Pollution degree 2 ④Installation category II

X-ON Electronics

Largest Supplier of Electrical and Electronic Components

Click to view similar products for Temperature Controllers ***category:***

Click to view products by Autonics ***manufacturer:***

Other Similar products are found below :

E5C4Q40J999FAC120 E53-Q3 E5DC-RX2DSM-002 E5LD-6C AC100V E5AR-C4B AC100-240 E5GC-QX1D6M-015 E5AN-HTAA3BFMD-500AC/DC24 E5GC-QX2ACM-015 NX-TS3102 SCL250D-EM010 AR663.B/P/P/P/WA/RS485 AR663.B/P/P/S/WA AR663.B/P/P/P/WU AR662.B/P/P/P/WA RE12S TK4S-24RR RT-822B E53-R E53-CN03N2 2897952 2918041106321 2918041110021 2918121106321 2918121110021 2918121116021 2924121106321 E5DCQX2DSM-017 E5DCCX2ASM-016 E5DCCX0ASM-015 E5DCQX2DSM-002 EJ1N-TC4A AKT7211100 AR247/1/P/P/P/WA AR247/1/S/P/P/WA AR503/WA/R AR247/2/P/P/P/WA AR247/2/P/P/P/WA/RS485 AR247/3/P/P/P/WA AR247/3/P/P/S/WA AR247/3/S/P/S/WA/RS485 AR517/WA AR517/WA/RS485 AR517/WU AR518/WA AR602.B/P/P/RS485 AR602.B/P/P/WA/RJ45 AR602.B/P/P/WU AR602.B/P/S/WA AR632.B/P/P/P/WA AR632.B/P/P/S/WA