RoHS Compliant

Rev.	SIGN	DATE	DESCRIPTION	APPROVER

THIS IS CAD DRAWING, DO NOT REVISE MANUALLY!!!

Technical Specification:

1. Current: 180A.
2. Torque: 18 lbf.in.
3. Mark"▲" is the Critical dimension.

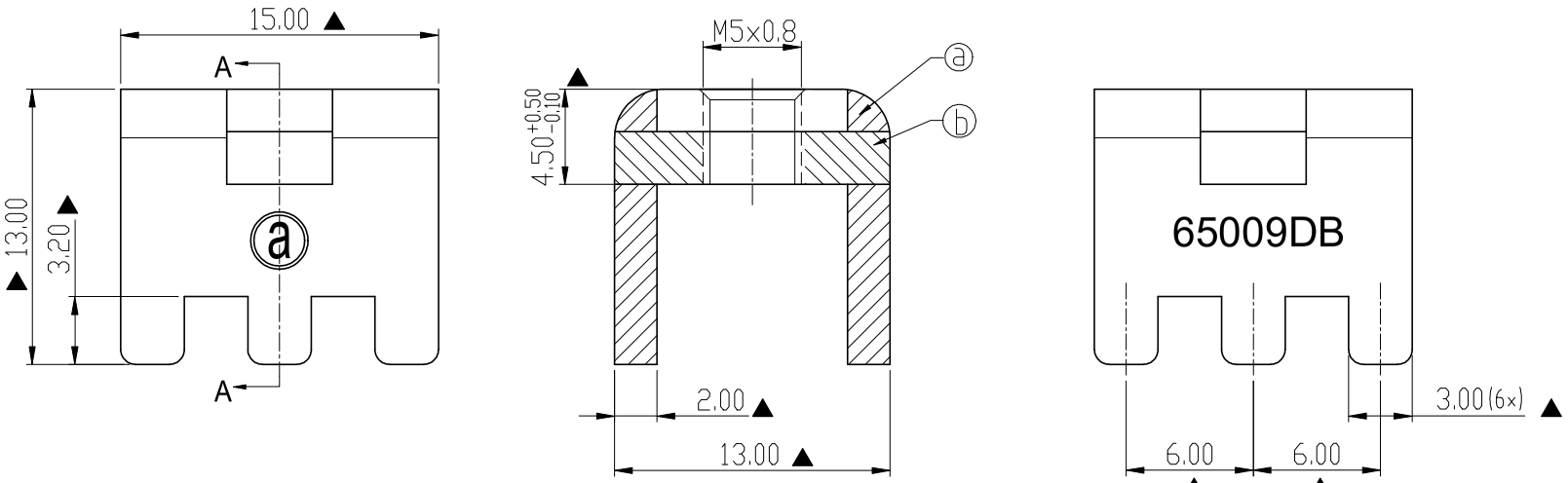

SECTION A-A

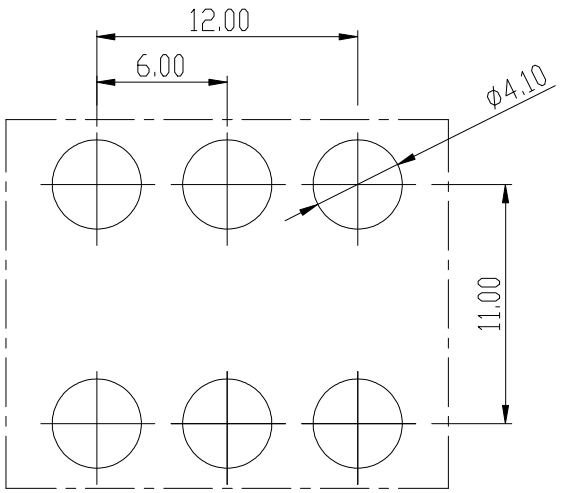

PCB LAYOUT

ITEM	PART NAME	DESCRIPTION	Q`ty
ⓑ	Spacer	Steel , Matte Tin Plated	1PCS
ⓐ	terminal	Copper alloy, Matte Tin Plated	1PCS

Amphenol ANYTEK

CUSTOMER COPY

ALL RIGHTS RESERVED. REPRODUCTION OR ISSUE TO THIRD PARTIES IN ANY FORM WHATEVER IS NOT PERMITTED WITHOUTWRITTEN AUTHORITY FROM THE PROPRIETOR. PROPERTY OF ANYTEK TECHNOLOGY CO., LTD

TITLE	AMT65009DB Stamped terminal				
PART NO.	AMT0650009DB0000G			DWG NO.	8AMT0033
APPROVED	CHECKED	DESIGNED	DRAWN	CUST NO.	
		Seamus 2023.10.18	Seamus 2023.10.18	UNIT: mm / SCALE: NONE / SHEET: 01/01	REV.: A0

Tolerance	
>30	±0.60
6-30	±0.40
0-6	±0.30
ANGLES	±1°

X-ON Electronics

Largest Supplier of Electrical and Electronic Components

Click to view similar products for Terminals ***category:***

Click to view products by Amphenol ***manufacturer:***

Other Similar products are found below :

00-054007-01074-6 00-054007-70206-1 00-054007-70210-8 00-054007-70217-7 00-054007-70228-3 00-054007-70256-6 00-054007-70316-7 00-054007-49560-4 00-054007-70209-2 00-054007-70231-3 00-054007-70241-2 00-054007-70242-9 00-054007-70246-7 00-054007-70263-4 00-054007-70288-7 00-054007-70290-0 00-054007-70300-6 00-054007-70304-4 01-2900-1-04412 0190160084 0190350008 600TS-10 605601-1 60617-1-C 61314-6-C 626-0194 63-S M55155/079C01 M55155/099B03 M55155/109H01 M55155/12XH05 M55155/29XJ08 M55155/30-6S M55155/30-9S M55155/30XI09 M6-14RSX M86700006 D18-110B-C D18-110B-M 701-1936 701-1955 701-2003 701-2007 701-2013 701-2018 701-2069 701-2077-60 701-2315 701-2430 701-2480