THIS COPY IS PROVIDED ON A RESTRICTED BASIS AND IS NOT TO BE USED IN ANY WAY DETRIMENTAL TO THE INTERESTS OF PANDUIT CORP.

NOTE:

1. SEE CURRENT CATALOG FOR PART NUMBER SUFFIX DESIGNATION FOR COLOR AND PACKAGE SIZE. (D)
2. DIMENSIONS ARE IN INCHES(MILLIMETERS).

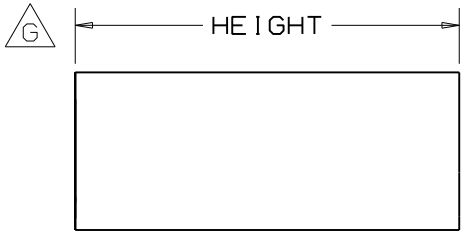

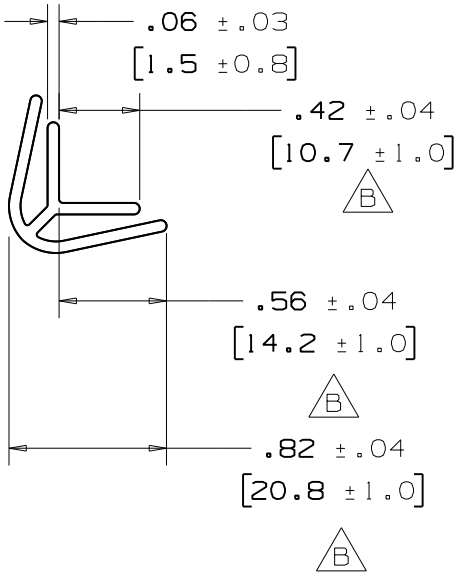

PART NAME	PANDUIT PART NUMBER	HEIGHT IN (mm) (A)(G)	WEIGHT lb/(g) PER pcs (A)(E)
(C) CORNER STRIP	CS1**6	72.00(1828.7)	0.728/(330.2)
PART NAME	**PANDUIT PART NUMBER**	**HEIGHT IN (mm)**	**WEIGHT lb/(g) 100 pcs**
CORNER STRIP PIECE	CSP1LG-Q	.47(11.9)	.49/(222)
	CSP1.5LG-Q	1.04(26.4)	.60/(272)
	CSP2LG-Q	1.23(31.2)	.80/(362)
	CSP3LG-Q	2.27(57.7)	1.60/(725)
	CSP4LG-Q	3.25(82.6)	2.40/(1087)

(F)(C)

REV	DATE	BY	CHK	DESCRIPTION	ECN	R	CUST	SUP
4	11-9-09	JCST	MRJS	G. CHANGED "LENGTH" TO "HEIGHT" F. CHANGED TITLE BLOCK - REMOVED "6FT&PC'S"	34047-01	HIW	HIW	
3	4-12-06	JCST	JKG	E. REV'D LENGTHS AND WEIGHTS.	34047-01	JKG	JKG	
2	9-7-01	JCST	JKG	D. CHANGED NOTES C. ADDED CS1**6 - CHANGED TITLE BLOCK	34047-01	JKG	JKG	
1	8-18-94	DW	KRK1	B. ADDED TOLERANCES. A. REV'D LENGTHS AND WEIGHTS.	34047-01	CEF	CEF	
R	10-3-86	LDB	WJB	RELEASED TO PRODUCTION	34047-01	R		

CAD FILENAME/LAYERS: D34047BA_DC_CSP/03A

PANDUIT CORP. TINLEY PARK, ILLINOIS

CORNER STRIP
(CS1**6 & CSP*LG-Q)
CUSTOMER DRAWING

UNLESS OTHERWISE SPECIFIED, DIMENSIONAL TOLERANCES ARE: (B)
(.X) ± (.XXX) ±
(.XX) ±.060(1.5) ANGLES ±

UNLESS OTHERWISE SPECIFIED, ALL DIMENSIONS ARE GIVEN IN INCHES, THIRD ANGLE PROJECTION.

DRAWN BY: L BENTZ
DATE: 10-3-86
CHK'D: WJB
MAT'L: POLYVINYL CHLORIDE
SCALE: FULL
DRAWING NO.: 34047-01
DWG SIZE: A