MICRO SWITCH
FREEPORT ILLINOIS U S A
A DIVISION OF HONEYWELL
FED MFG CODE 91929

SWITCH - ENCLOSED

CATALOG LISTING
404EN64-6

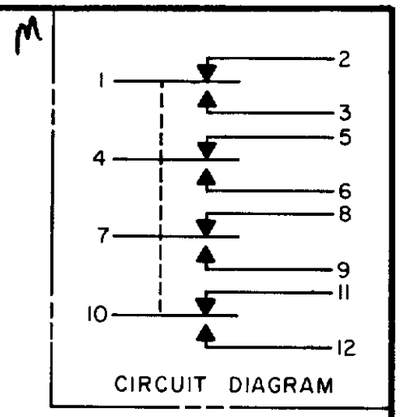

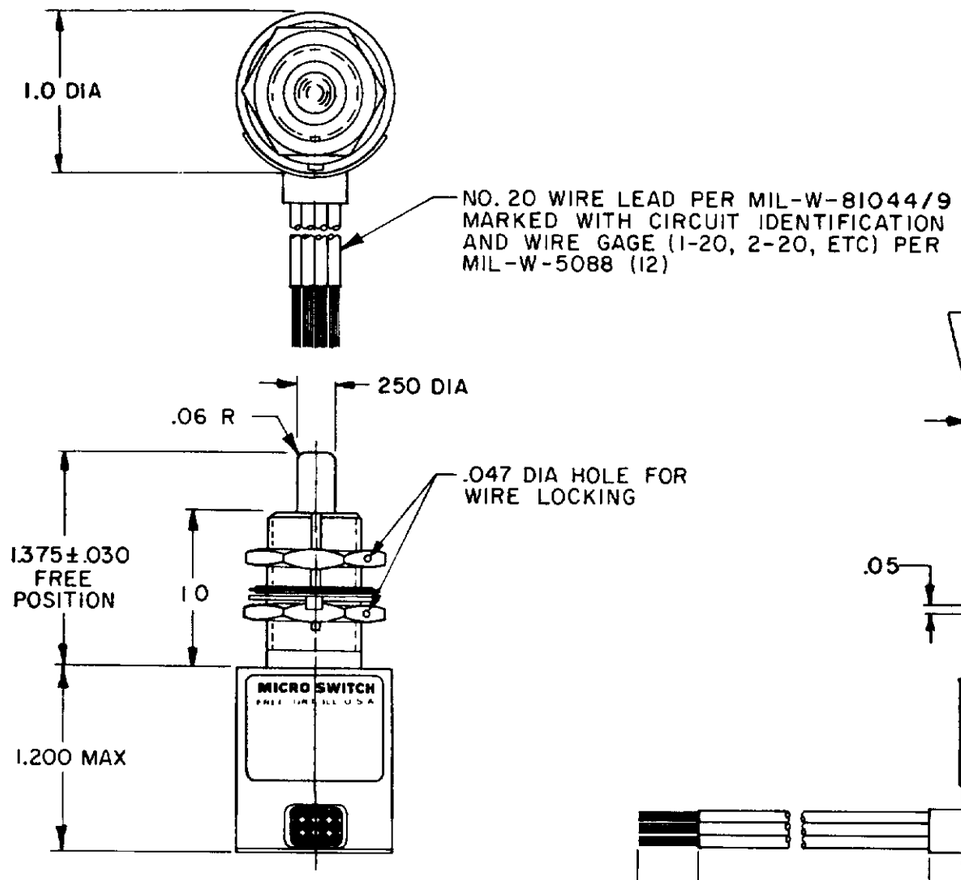

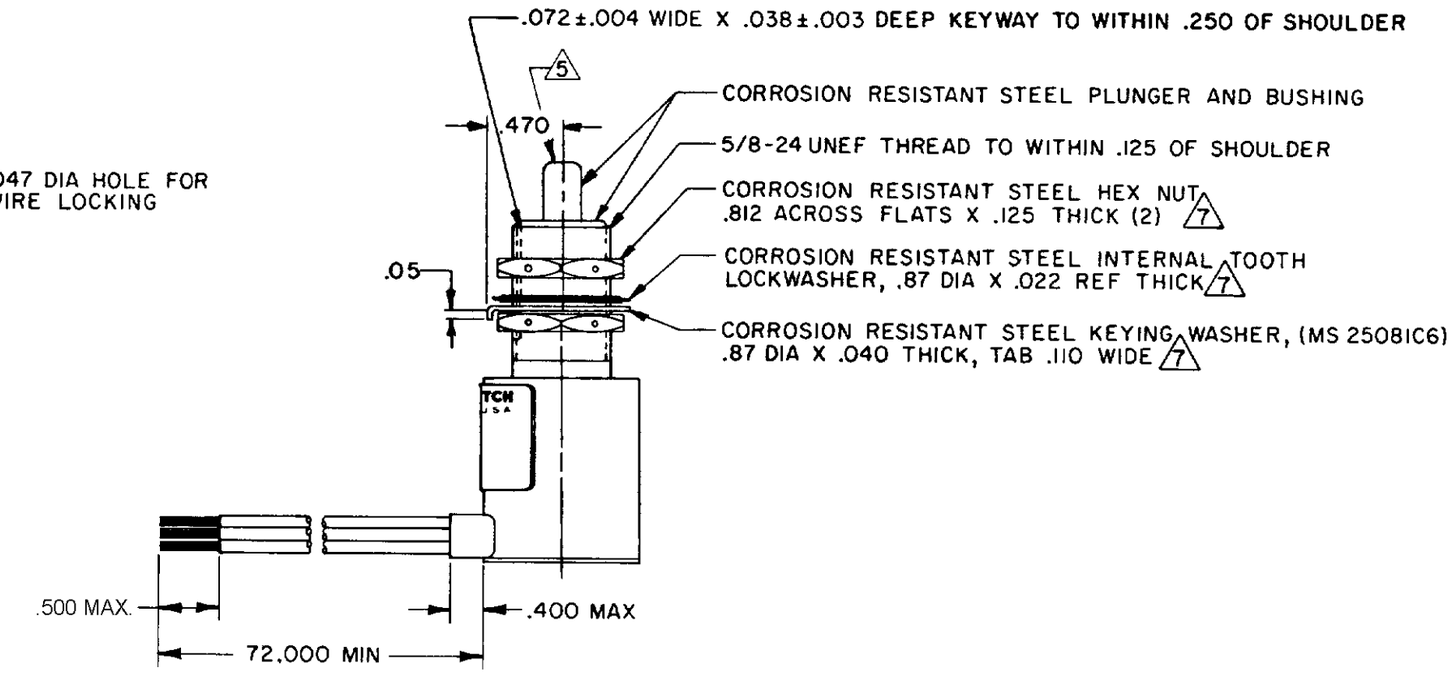

NOTES
1 - CORROSION RESISTANT STEEL ENCLOSURE
2 - SWITCH SEALED PER MIL-PRF-8805 SYMBOL 4
3 - CIRCUIT DIAGRAM AND CATALOG LISTING ARE SHOWN ON NAMEPLATE
4 - COINCIDENCE OF OPERATING AND RELEASING POINTS· .010 OF PLUNGER TRAVEL
5 - EXTERNAL PLUNGER THROUGH HARDENED 37 ROCKWELL C MIN
6 - BASIC SWITCHES HAVE SOLID GOLD CONTACT MATERIAL
7 - HARDWARE MAY BE PACKAGED UNASSEMBLED PER MIL-PRF-8805

THIS DRAWING COVERS A PROPRIETARY ITEM AND IS THE PROPERTY OF MICRO SWITCH, A DIVISION OF HONEYWELL. THIS DRAWING IS NOT TO BE COPIED OR USED WITHOUT THE APPROVAL OF MICRO SWITCH

THIRD ANGLE PROJECTION

SCALE FULL

DO NOT SCALE PRINT

TOLERANCES
APPLY TO DESIGN UNITS CONVERSIONS ARE ONLY FOR REFERENCE UNLESS NOTED TOLERANCES ARE ±

	DIM mm	TOL mm/in	DIM in	TOL mm/in
NO PLACES	X	1/04		
ONE PLACE	X.X	0.4/0.016	X.X	0.07/.003
TWO PLACES	X.XX	0.15/.006	X.XX	0.38/.015
THREE PLACES			X.XXX	0.13/.005
ANGLES				

DESIGN UNITS SI METRIC ☐ US CUSTOMARY ☒

RAW MATERIAL-COMMERCIAL STANDARD
MICRO SWITCH STANDARDS APPLY
DIMENSIONS ARE TO BE MET BEFORE PROTECTIVE COATINGS ARE APPLIED

WEIGHT 8.8 OZ MAX

CHARACTERISTICS

OPERATING FORCE ---------9 LB MAX
FULL OVERTRAVEL FORCE------30 LB MAX
RELEASE FORCE ----------3 LB MIN
PRETRAVEL ----------.040 MAX
DIFFERENTIAL TRAVEL------ .020 MAX
OVERTRAVEL ---------- .250 MIN

ELECTRICAL DATA

CONTACT ARRANGEMENT
S P D T (4)

LOAD	28 VDC	
	SEA LEVEL	50,000 FT.
RES	1	1
IND	0.5	0.5

404EN64-6

DRAWING NUMBER M

ISSUE 14 13

RELEASE NO PR-2029

REPLACES

REVISIONS

A	C044351	CEB 1 OCT 79	18JAN08
B	C047020	WJM 14 DEC 79	
C	C047573	JAP 7 AUG 80	BLR
D	C054192-A	KJS 9 DEC 83	
E	C057370	TSK 15 MAY 85	
F	C074101	GJW 30 JAN 93	1 OCT 79
G	C0 775048	SAD 16 MAY 94	
H	0036806	MST 18JAN08	CEB

CHECK

DRAWN CEB 1 OCT 79

FO-5285 1-A