CONNECTOR DESIGNATOR

H

ROTATABLE COUPLING

620 H S 011 M 17

- Product Series
- Connector Designator
- Angle and Profile
  - S = Straight
  - A = 90°
- Basic Part No.
- Finish (Table II)
- Shell Size (Table III)

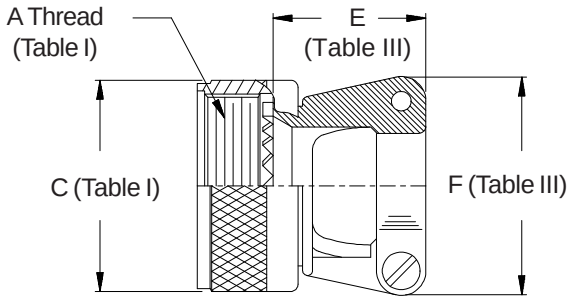

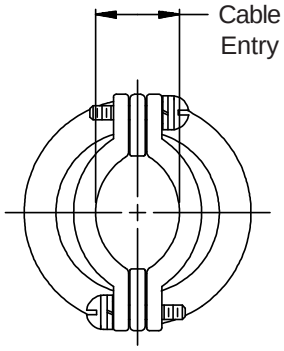

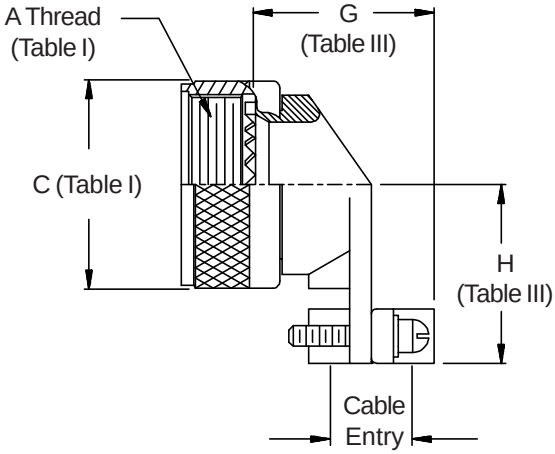

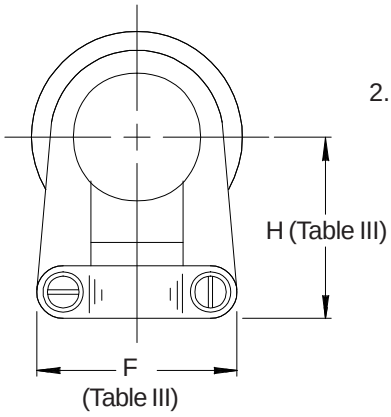

See inside back cover fold-out or pages 13 and 14 for Tables I and II.

1. Cable Entry is defined as the accommodation entry for the wire bundle or cable. Dimensions are not intended for inspection criteria.
2. Metric dimensions (mm) are indicated in parentheses.

TABLE III: CABLE ENTRY

Shell Size	E Max		F Max		G Max		H Max		Cable Entry Closed		Cable Entry Open	
09	.830	(21.1)	.850	(21.6)	.704	(17.9)	.808	(20.5)	.098	(2.5)	.234	(5.9)
11	.850	(21.6)	.900	(22.9)	.786	(20.0)	.867	(22.0)	.153	(3.9)	.234	(5.9)
13	.900	(22.9)	1.100	(27.9)	.979	(24.9)	.929	(23.6)	.190	(4.8)	.328	(8.3)
15	.900	(22.9)	1.150	(29.2)	1.039	(26.4)	.992	(25.2)	.260	(6.6)	.457	(11.6)
17	.940	(23.9)	1.300	(33.0)	1.188	(30.2)	1.056	(26.8)	.283	(7.2)	.614	(15.6)
19	1.020	(25.9)	1.500	(38.1)	1.300	(33.0)	1.233	(31.3)	.325	(8.3)	.634	(16.1)
21	1.070	(27.2)	1.600	(40.6)	1.425	(36.2)	1.296	(32.9)	.343	(8.7)	.698	(17.7)
23	1.190	(30.2)	1.700	(43.2)	1.550	(39.4)	1.358	(34.5)	.381	(9.7)	.823	(20.9)
25	1.220	(31.0)	1.800	(45.7)	1.675	(42.5)	1.420	(36.1)	.418	(10.6)	.853	(21.7)

© 2005 Glenair, Inc.