## STAINLESS STEEL

**CONNECTOR DESIGNATOR**

**A**

**ROTATABLE COUPLING**

**620 A A 002 U 16 D**

- Product Series
- Connector Designator
- Angular Function
  A = 90°
- Basic Part No.
- Finish
  Z1 = Passivate
  U = Black Cadmium
- Shell Size
- Drain Hole Option
  (Omit for None)

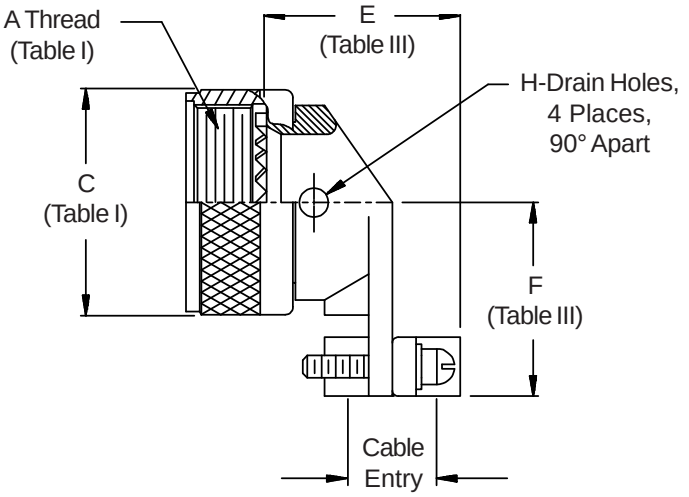


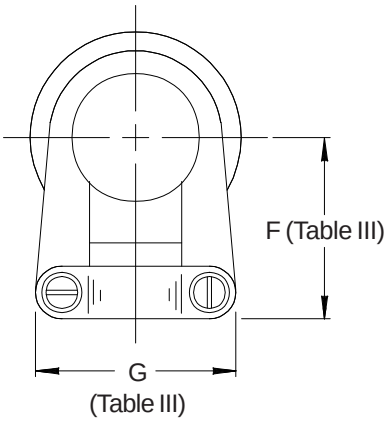


**See inside back cover fold-out or page 14 for Table I.**

**TABLE III: CABLE ENTRY**

| Shell Size | E Max | | F Max | | G Max | | H Max | | Cable Entry Closed | | Cable Entry Open | |
|---|---|---|---|---|---|---|---|---|---|---|---|---|
| 08 | .704 | (17.9) | .808 | (20.5) | .752 | (19.1) | .125 | (3.2) | .125 | (3.2) | .204 | (5.2) |
| 10 | .786 | (20.0) | .867 | (22.0) | .832 | (21.1) | .125 | (3.2) | .187 | (4.7) | .286 | (7.3) |
| 12 | .979 | (24.9) | .929 | (23.6) | .988 | (25.1) | .188 | (4.8) | .291 | (7.4) | .416 | (10.6) |
| 14 | 1.039 | (26.4) | .992 | (25.2) | 1.046 | (26.6) | .188 | (4.8) | .351 | (8.9) | .476 | (12.1) |
| 16 | 1.188 | (30.2) | 1.056 | (26.8) | 1.319 | (33.5) | .188 | (4.8) | .501 | (12.7) | .626 | (15.9) |
| 18 | 1.300 | (33.0) | 1.233 | (31.3) | 1.451 | (36.9) | .188 | (4.8) | .518 | (13.2) | .706 | (17.9) |
| 20 | 1.425 | (36.2) | 1.296 | (32.9) | 1.551 | (39.4) | .188 | (4.8) | .581 | (14.8) | .831 | (21.1) |
| 22 | 1.550 | (39.4) | 1.358 | (34.5) | 1.653 | (42.0) | .188 | (4.8) | .644 | (16.4) | .956 | (24.3) |
| 24 | 1.675 | (42.5) | 1.420 | (36.1) | 1.775 | (45.1) | .188 | (4.8) | .706 | (17.9) | 1.081 | (27.5) |
| 28 | 1.813 | (46.1) | 1.634 | (41.5) | 2.020 | (51.3) | .188 | (4.8) | .750 | (19.1) | 1.187 | (30.1) |

1. Cable Entry is defined as the accommodation entry for the wire bundle or cable. Dimensions are not intended for inspection criteria.
2. Metric dimensions (mm) are indicated in parentheses.

© 2005 Glenair, Inc. CAGE Code 06324 Printed in U.S.A.