## CONNECTOR DESIGNATOR

# H

## ROTATABLE COUPLING

**620 H S 011 M 17**

- Product Series
- Connector Designator
- Angle and Profile
  - S = Straight
  - A = 90°
- Basic Part No.
- Finish (Table II)
- Shell Size (Table III)

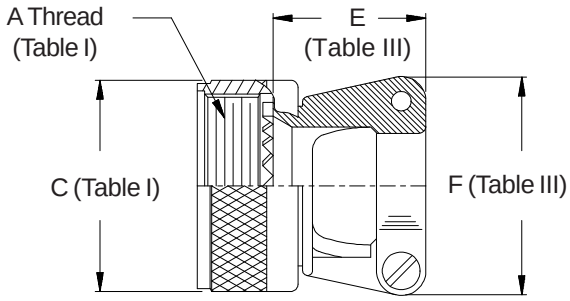


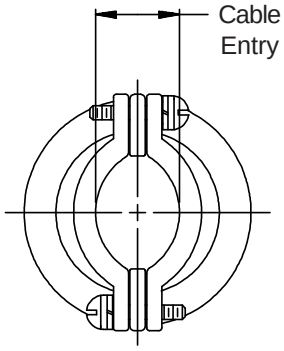


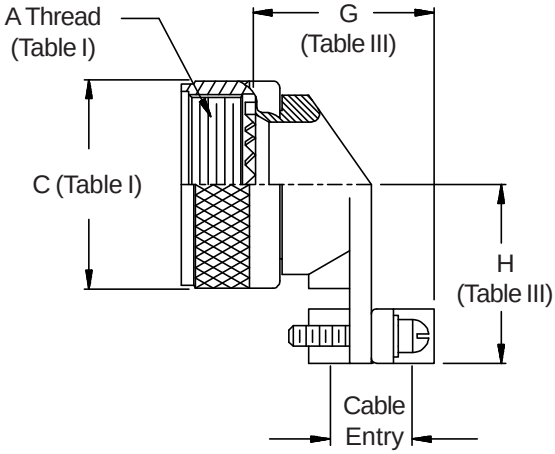


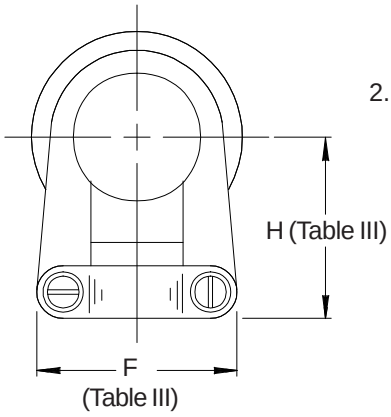


**See inside back cover fold-out or pages 13 and 14 for Tables I and II.**

1. Cable Entry is defined as the accommodation entry for the wire bundle or cable. Dimensions are not intended for inspection criteria.
2. Metric dimensions (mm) are indicated in parentheses.

**TABLE III: CABLE ENTRY**

| Shell Size | E Max | | F Max | | G Max | | H Max | | Cable Entry Closed | | Cable Entry Open | |
|---|---|---|---|---|---|---|---|---|---|---|---|---|
| 09 | .830 | (21.1) | .850 | (21.6) | .704 | (17.9) | .808 | (20.5) | .098 | (2.5) | .234 | (5.9) |
| 11 | .850 | (21.6) | .900 | (22.9) | .786 | (20.0) | .867 | (22.0) | .153 | (3.9) | .234 | (5.9) |
| 13 | .900 | (22.9) | 1.100 | (27.9) | .979 | (24.9) | .929 | (23.6) | .190 | (4.8) | .328 | (8.3) |
| 15 | .900 | (22.9) | 1.150 | (29.2) | 1.039 | (26.4) | .992 | (25.2) | .260 | (6.6) | .457 | (11.6) |
| 17 | .940 | (23.9) | 1.300 | (33.0) | 1.188 | (30.2) | 1.056 | (26.8) | .283 | (7.2) | .614 | (15.6) |
| 19 | 1.020 | (25.9) | 1.500 | (38.1) | 1.300 | (33.0) | 1.233 | (31.3) | .325 | (8.3) | .634 | (16.1) |
| 21 | 1.070 | (27.2) | 1.600 | (40.6) | 1.425 | (36.2) | 1.296 | (32.9) | .343 | (8.7) | .698 | (17.7) |
| 23 | 1.190 | (30.2) | 1.700 | (43.2) | 1.550 | (39.4) | 1.358 | (34.5) | .381 | (9.7) | .823 | (20.9) |
| 25 | 1.220 | (31.0) | 1.800 | (45.7) | 1.675 | (42.5) | 1.420 | (36.1) | .418 | (10.6) | .853 | (21.7) |

© 2005 Glenair, Inc.