DO NOT SCALE

PART NO 1212 9938

DATE	SYM	REVISION RECORD	AUTH	DR	CK
07JA99	C1	REDRAWN TO PD	990009	AAS	MVA

SYMBOL DEFINITION			MISSING NUMBERS
THE NUMBER INSIDE THE SYMBOL ⬭ CORRESPONDS TO THE NUMBER ON THE INSPECTION REPORT FOR THIS DRAWING/PART NUMBER	TOTAL NO. OF SYMBOLS ON DRAWING	17	
	LAST NO. USED	17	

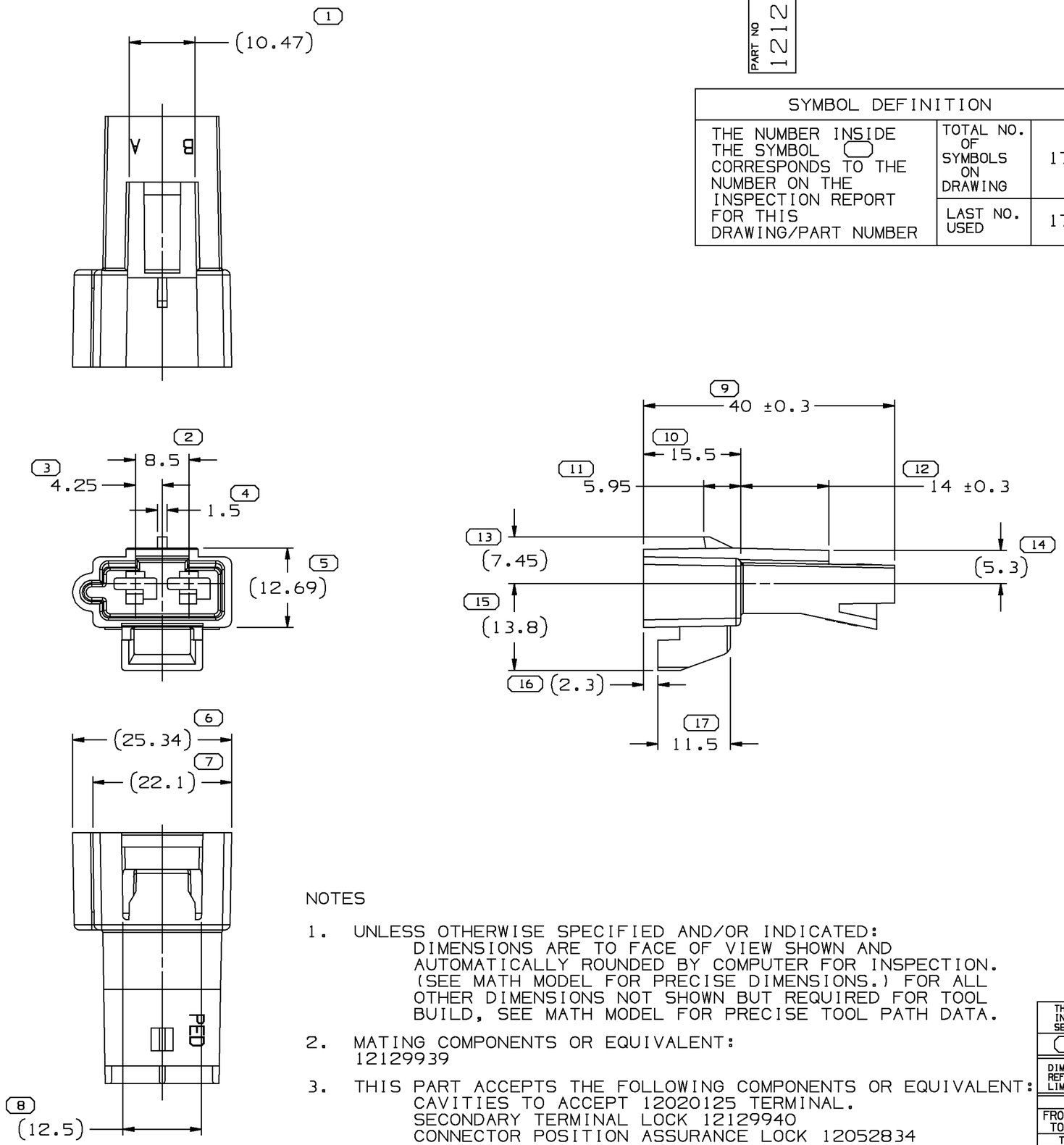

NOTES

1. UNLESS OTHERWISE SPECIFIED AND/OR INDICATED:
   DIMENSIONS ARE TO FACE OF VIEW SHOWN AND AUTOMATICALLY ROUNDED BY COMPUTER FOR INSPECTION. (SEE MATH MODEL FOR PRECISE DIMENSIONS.) FOR ALL OTHER DIMENSIONS NOT SHOWN BUT REQUIRED FOR TOOL BUILD, SEE MATH MODEL FOR PRECISE TOOL PATH DATA.
2. MATING COMPONENTS OR EQUIVALENT:
   12129939
3. THIS PART ACCEPTS THE FOLLOWING COMPONENTS OR EQUIVALENT:
   CAVITIES TO ACCEPT 12020125 TERMINAL.
   SECONDARY TERMINAL LOCK 12129940
   CONNECTOR POSITION ASSURANCE LOCK 12052834

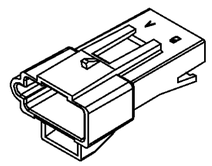

THE DIMENSION NUMBER(S) SHOWN BELOW INDICATE DIMENSIONS THAT ARE PROCESS SENSITIVE FOR PART PRODUCTION

9	12	17

DIMENSIONS ENCLOSED IN ( ) INDICATE REFERENCE DIMENSIONS AND NO TOLERANCE LIMITS ARE ESTABLISHED

DIMENSIONAL RANGE					
FROM	0	> 20	> 30	> 70	> 100
TO	20	30	70	100	
TOLERANCE UNLESS OTHERWISE SPECIFIED					
±0.15	±0.2	±0.3	±0.4	±0.5	
ANGULAR TOLERANCE ± 2°					

PART DRAWING

Unigraphics

THIRD ANGLE PROJECTION

CODE NO 6900	QC	METRIC DIMENSIONS ARE IN MILLIMETERS UNLESS OTHERWISE SPECIFIED
DWG DATE 07AP92		
SCALE 2:1		DES
REFERENCE NO 001,701		DR BRIAN K. DEW 270C92
		CK BRIAN K. DEW 270C92
		APPR ANTHONY RASCHILLA 06NO92
		VOL CM³ 4.082

MATERIAL SPEC R0071754 PA66 HS IM-BLK

NAME CONN 2M M/P 630

PART NUMBER 1212 9938 SIZE A2

DELPHI PACKARD ELECTRIC SYSTEMS
WARREN, OHIO 44486