THIS DRAWING AND DESIGN HEREON CONSTITUTES A PROPRIETARY DESIGN OF PACKARD ELECTRIC DIVISION AND IS NOT TO BE DUPLICATED OR REPRODUCED WITHOUT AUTHORITY OF PACKARD ELECTRIC DIVISION.

DO NOT SCALE

DATE	SYM	REVISION RECORD	AUTHORITY	DR	CK
23AP86	A	RELEASED	860005	EM	FH
15SE87	—	ADDED NOTE #5	115679	RP	FH
28OC87	—	REVISED DIMS & GRAPHICS	115990	JR	FH
07JN88	A1	"DASH" WAS REV "B" IN C/N 115990	120303	JN	BAR
20JL89	B	MAT'L SPEC WAS NYLON 6 - BLACK			
		& REF. NO. WAS 12065171	128157	JEM	JEM

PART NO. 1206 5171

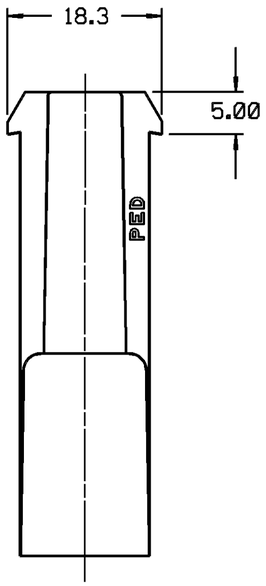

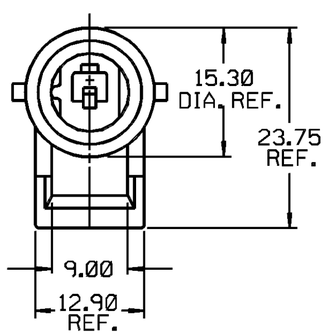

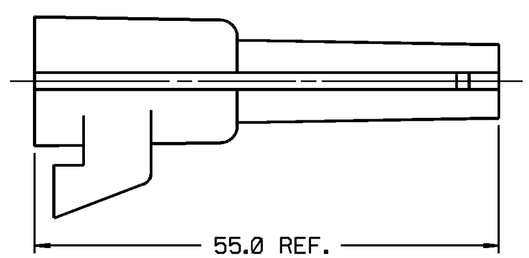

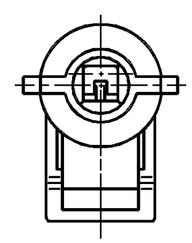

NOTES —
1. CAVITY TO ACCEPT 12040559 TERMINAL OR EQUIVALENT.
2. MATING CONNECTOR 12065170 OR EQUIVALENT.
3. CONNECTOR TO ACCEPT 12065249 SECONDARY LOCK OR EQUIVALENT.
4. USE 12052834 CONNECTOR POSITION ASSURANCE.
5. SEALING CODE 3.

B

B

PACKARD ELECTRIC DIVISION
GENERAL MOTORS CORPORATION
WARREN, OHIO

-0-

PED / INTERGRAPH. MICROSTATION		FILE SPEC:	$$$$USER$$$$ DGN$SPECIFICATION$$$$$$$$$$$$ $$$$$SYTIME$$$$$$
THIRD ANGLE PROJECTION		METRIC DIMENSIONS ARE IN MILLIMETERS UNLESS OTHERWISE SPECIFIED.	
CODE NO. 6900		TOLERANCE UNLESS OTHERWISE SPECIFIED DECIMAL: ONE PLACE ±0.3 TWO PLACE ±0.15	ANGULAR ±2°
Q.C.			
DWG. DATE 18NO85	SCALE NONE	DR. ERIC MIZER	17DE86
EST. NO.		CK. F. HESTON	DATE 07MY86
REFERENCE NO. 12089915 'D' SIZE		APPR. K. PHILLIPS	DATE 07MY86
		APPR. A.WINYARD	DATE 07MY86
MATERIAL SPEC. NYLON 66 - BLACK			
NAME CONN 1M M/P 280			
PART NO. 1206 5171 OUTLINE DRAWING			SIZE C

PACKARD ELECTRIC