97 series solder type
how to order

Example of part number for solder type connectors is given below.

97 – 3101 A – 28 – 21 S Y (847) (639)

Series Number
97 - Like MS but Amphenol®

Shell Type
3100 Wall Receptacle
3101 Cable Receptacle
3102 Box Receptacle
3106 Straight Plug
3107 Quick Disconnect Plug
3108 Angle Plug

Shell Construction
A - Solid Backshell
B - Split Backshell

Shell Size
8S, 10SL, 12S, 14S, 14, 16S, 16
18, 20, 22, 24, 28, 32, 36

Insert Configuration Number
See insert availability listing - pages 4 & 5, and see insert arrangement illustrations - pages 6-11.

Shell Finish Suffix
Omit for standard O.D. cadmium finish
(604) Gray anodized
(608) Black anodized
(621) Black zinc alloy
(624) Green zinc alloy
(639) Clear cadmium
(640) Conductive black zinc alloy
(689) Electroless nickel

OR

RoHS Compliant Suffix
(946) Black zinc alloy plating plus solder contact less pre-filled cup

Deviation from standard A&B construction
Omit this suffix if standard construction is desired
(115) Small flange receptacle
(426) Gold over silver plating on contacts
(438) Construction for potting (see page 30 for additional deviations)
(936) Connector plug with safety wire holes in coupling nut
Consult Amphenol, Sidney, NY for other deviations.

Alternate Insert Positions
Omit for standard position
W, X, Y or Z for alternate positions, depending on insert (see page 12 for positions available)

Contact Type
P = Pin
S = Socket

Note: Accessories for 97 Series Connectors should be ordered with matching connector plating. See accessory pages 33-39.

8/29/89 16:23 * 89241 15:52 * PRELSE * 10-820100/119 C001

REVISIONS				
ZONE	LTR	DESCRIPTION	DATE	APPROVED
—	C	(CLII) ADDED NOTE 8 ECN:22391	08/29/89 BURNSIDE	M.M. J.B.
	D	(CLII) CHANGE BLOCK CHANGE ONLY WAS SHELL 10-617702-XX3 (NO SLOT) ECN: 90048	11-18-04 DEMATTEO	JCD

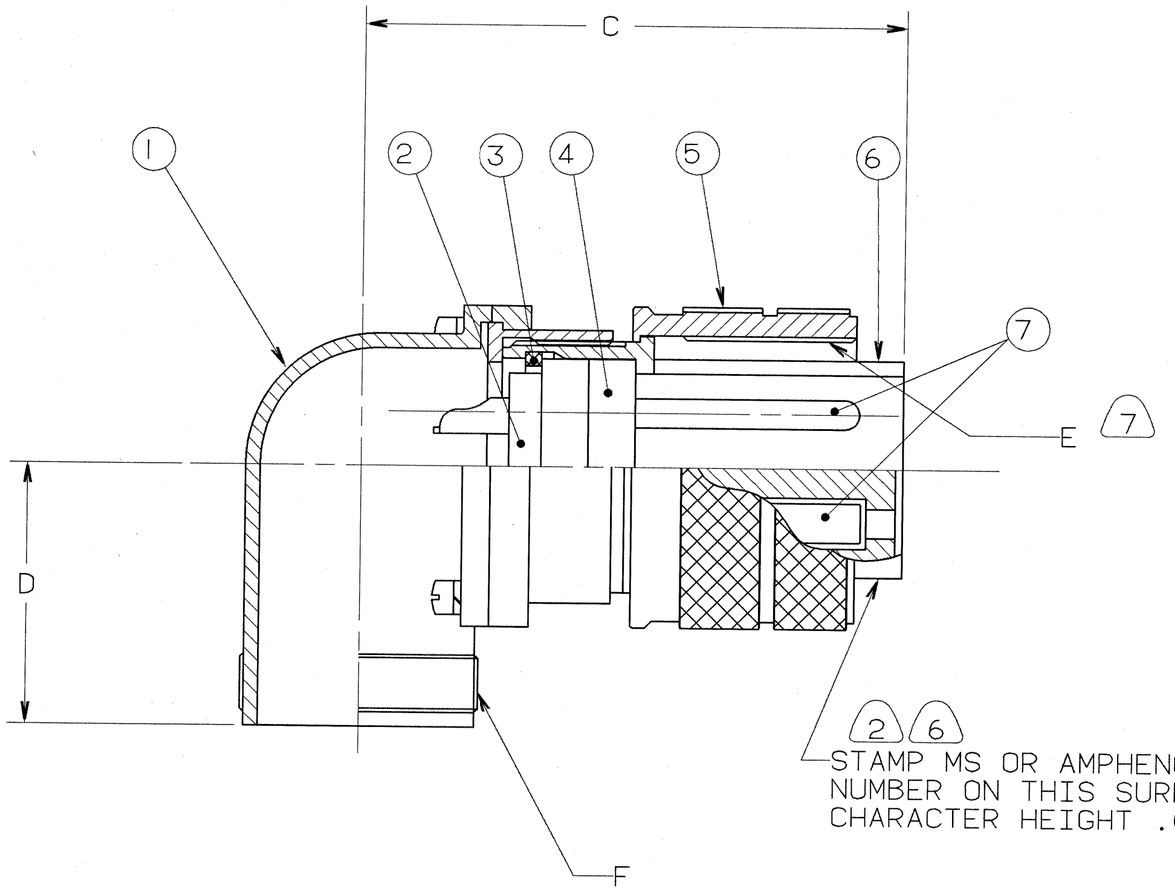

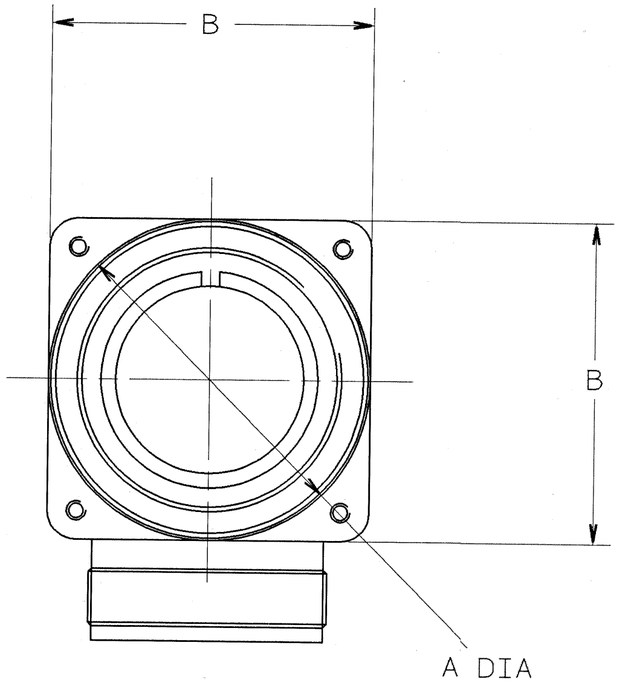

97-3108A

FIND NO.	QTY REQD.	FSCM NO.	PART NUMBER	DESCRIPTION	NOTE REF.
7	SEE NOTE 1		SEE NOTE 1	CONTACTS	
6				SHELL	
5				RING, COUPLING	7
4				INSERT, FRONT	
3				RING, RETAINING	
2				INSERT, REAR	
1				HOUSING ASSEMBLY	

PARTS LIST

SEE SHEET 2.

NOTES:

UNLESS OTHERWISE SPECIFIED LINEAR DIMENSIONS ARE IN INCHES.
TOLERANCES: .XXX±.010, .XX ±.03, .X ±.1, ANGLES ±2°.
OTHER STANDARDS PER 9-3800 AND DOD-D-1000.
NOTE REF.= (XX)

SPECIFICATIONS	SIGNATURES	DATES
MATERIAL SPEC. N/A	PREPARED A.PRESCOTT	11/03/87
	CHECKED PHILPOTT	11/12/87
	MATERIAL	
PROCESS SPEC. 9-2437-33	APPROVED BERNHARDT	11/13/87
	APPROVED HAYNER	11/17/87
	1ST PART NO. 10-820102-03S	

AMPHENOL CORPORATION
BENDIX CONNECTOR OPERATIONS
SIDNEY, N.Y.

CONNECTOR, ELECTRICAL PLUG, TYPE 97-3108A, OLIVE DRAB CADMIUM PLATE. U

SIZE	FSCM NO.		REV.
C	77820	10-820100/119	D
SCALE NONE	WT.	REF N/A	SHEET 1 OF 2

THE USE OF THIS DOCUMENT IS UNLIMITED. HOWEVER, DOCUMENTS REFERENCED HEREON MAY CONTAIN LIMITED RIGHTS DATA.

N/A
N/A
NEXT ASSEMBLY

COMPUTER GENERATED DRAWING.

000000001 01250

TAB.

IMAGED / Nov. 22 2004, 02:49 PM

CLIP HERE