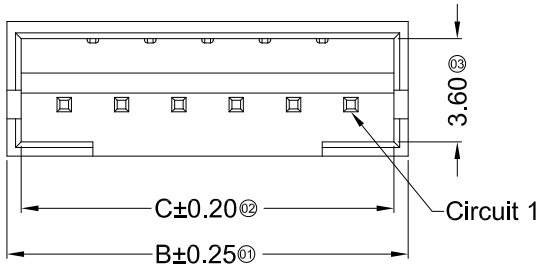

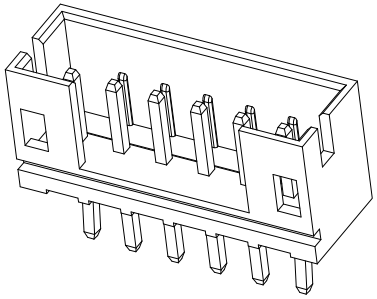

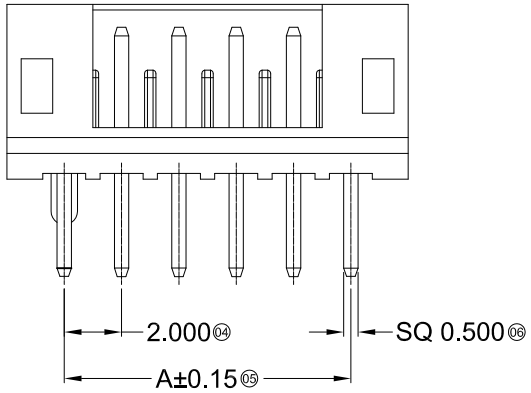

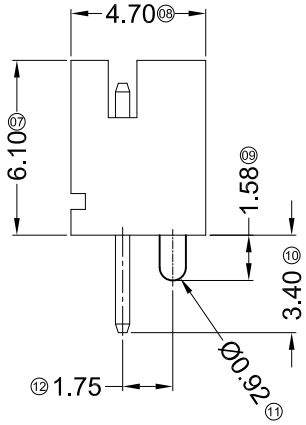

■ Specifications :

- Voltage rating: 100V AC / DC
- Current rating: 2A AC / DC
- Withstanding voltage: 800V AC/minute
- Temperature range: -25°C~+85°C
- Insulation resistance:≥1000MΩ
- Contact resistance: ≤10mΩ
- After environmental testing：≤20mΩ

X2016 W V X-XX S-LP SN XX
① ② ③ ④ ⑤ ⑥ ⑦ ⑧ ⑨

① Series No.
② Category：W-WAFER
③ Welding Board Angle：V-Straight 180°
④ Welding Way: Blank-DIP
⑤ Row No.-Pin No.: XX-02P~20P
⑥ Plug the Pin & Special No.: Blank-Without Kink,S-With Post ;
⑦ Material: LP-LCP 94V-0 ;
⑧ Plating Category: SN-Bright Tin Plating
⑨ Color : Blank-Natural Color ;

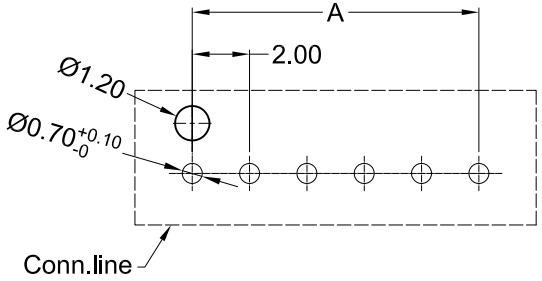

Recommended P.C.B Layout
General Tolerance±0.05

Poles	Dimensions (mm)			Poles	Dimensions (mm)			Poles	Dimensions (mm)		
	A	B	C		A	B	C		A	B	C
02	2.00	6.00	5.00	09	16.00	20.00	19.00	16	30.00	34.00	33.00
03	4.00	8.00	7.00	10	18.00	22.00	21.00	17	32.00	36.00	35.00
04	6.00	10.00	9.00	11	20.00	24.00	23.00	18	34.00	38.00	37.00
05	8.00	12.00	11.00	12	22.00	26.00	25.00	19	36.00	40.00	39.00
06	10.00	14.00	13.00	13	24.00	28.00	27.00	20	38.00	42.00	41.00
07	12.00	16.00	15.00	14	26.00	30.00	29.00				
08	14.00	18.00	17.00	15	28.00	32.00	31.00				

PART N0	Material	Material(Pin)	Finish(Pin)	Suitable XKB Terminal
X2016WV-XXS-LPSN	LCP UL 94V-0	Brass	Tin-Plated	X2016H

For and on behalf of
XKB INDUSTRIAL PRECISION CO., LIMITED
香港星坤工業精密有限公司
Authorized Signature(s)

MARK	DESCRIPTION	DATE	REVISED	APPROVED
△ X				
△ X				
△ X				

REVISIONS

UNSPECIFIED TOLERANCES	
ANGULAR	±5°
L≤4	±0.2
4<L≤16	±0.3
16<L≤63	±0.4
L>63	±0.5

DSND		DATE		SCALE: N/A	MODEL TYPE: X2016WV-XXS-LPSN
DWN		DATE		VIEW:	PART NO.: 2.00 mm Crimp Style Connectors
CHKD		DATE		UNIT: mm	DWG NO.:
APPD		DATE		SIZE: A4	

XKB INDUSTRIAL PRECISION CO.,LIMITED

WEIGHT	SHEET	REVISION
1.0g	1/1	A0

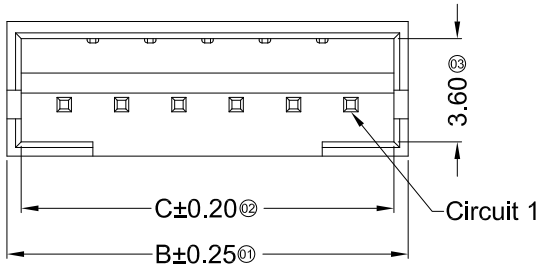

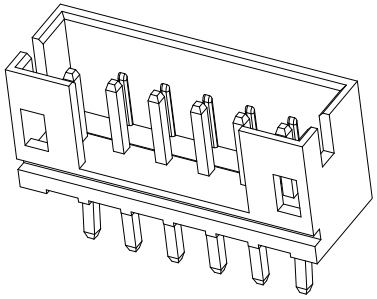

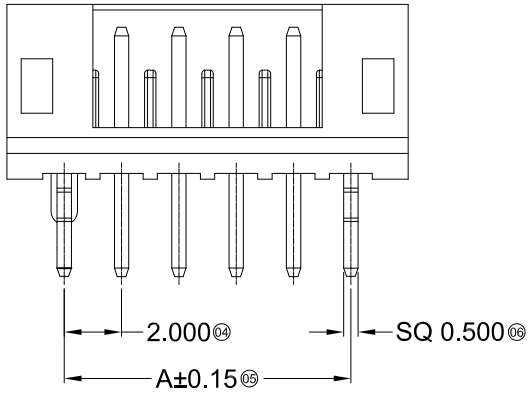

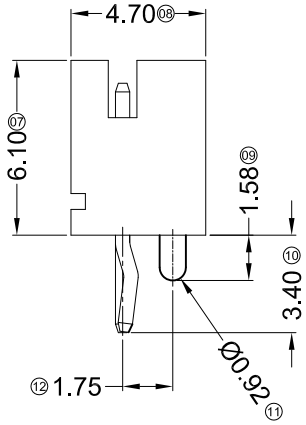

■ Specifications :

- Voltage rating: 100V AC / DC
- Current rating: 2A AC / DC
- Withstanding voltage: 800V AC/minute
- Temperature range: -25°C~+85°C
- Insulation resistance:≥1000MΩ
- Contact resistance: ≤10mΩ
- After environmental testing：≤20mΩ

X2016 W V X-XX KS-4T SN XX
① ② ③ ④ ⑤ ⑥ ⑦ ⑧ ⑨

① Series No.
② Category：W-WAFER
③ Welding Board Angle：V-Straight 180°
④ Welding Way: Blank-DIP
⑤ Row No.-Pin No.: XX-02P~20P
⑥ Plug the Pin & Special No.: K-With Kink,S-With Post ;
⑦ Material: 4T-PA4T 94V-0 ;
⑧ Plating Category: SN-Bright Tin Plating
⑨ Color : Blank-Natural Color ;

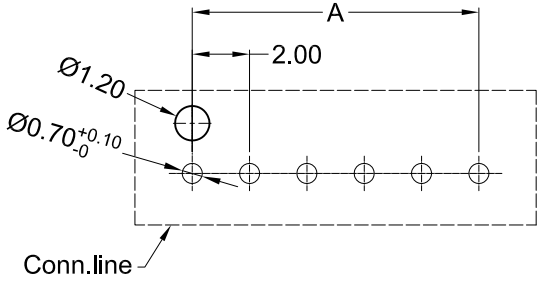

Recommended P.C.B Layout
General Tolerance±0.05

Poles	Dimensions (mm)			Poles	Dimensions (mm)			Poles	Dimensions (mm)		
	A	B	C		A	B	C		A	B	C
02	2.00	6.00	5.00	09	16.00	20.00	19.00	16	30.00	34.00	33.00
03	4.00	8.00	7.00	10	18.00	22.00	21.00	17	32.00	36.00	35.00
04	6.00	10.00	9.00	11	20.00	24.00	23.00	18	34.00	38.00	37.00
05	8.00	12.00	11.00	12	22.00	26.00	25.00	19	36.00	40.00	39.00
06	10.00	14.00	13.00	13	24.00	28.00	27.00	20	38.00	42.00	41.00
07	12.00	16.00	15.00	14	26.00	30.00	29.00				
08	14.00	18.00	17.00	15	28.00	32.00	31.00				

X2016WV-XXKS-4TSN	LCP UL 94V-0	Brass	Tin-Plated	X2016H
PART N0	Material	Material(Pin)	Finish(Pin)	Suitable XKB Terminal

For and on behalf of
XKB INDUSTRIAL PRECISION CO., LIMITED
香港星坤工業精密有限公司
Authorized Signature(s)

MARK	DESCRIPTION	DATE	REVISED	APPROVED
△ X				
△ X				
△ X				

REVISIONS

UNSPECIFIED TOLERANCES	
ANGULAR	±5°
L≤4	±0.2
4<L≤16	±0.3
16<L≤63	±0.4
L>63	±0.5

DSND		DATE		SCALE: N/A	MODEL TYPE: 2016WV-XXKS-4TSN
DWN		DATE		VIEW:	PART NO.: 2.00 mm Crimp Style Connectors
CHKD		DATE		UNIT: mm	DWG NO.:
APPD		DATE		SIZE: A4	

XKB INDUSTRIAL PRECISION CO.,LIMITED

WEIGHT	SHEET	REVISION
1.0g	1/1	A0

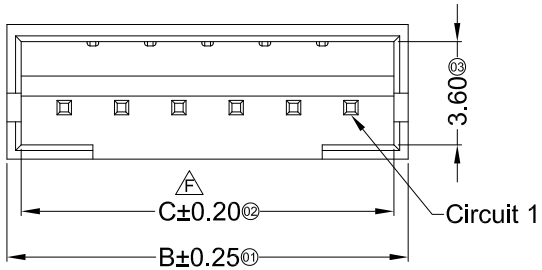

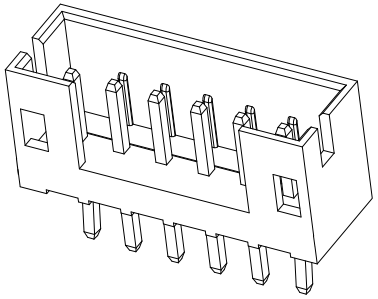

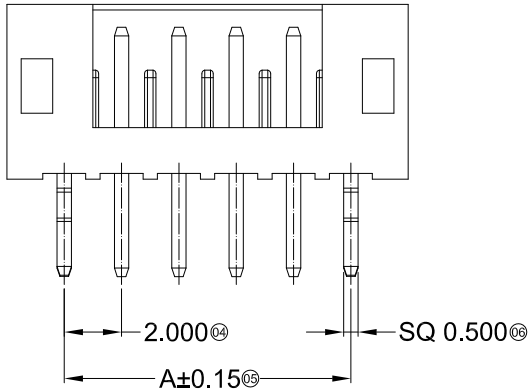

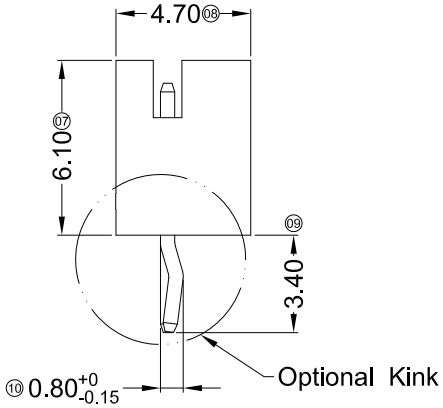

Kink(K)

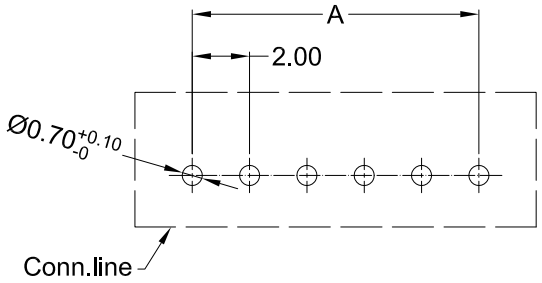

Recommended P.C.B Layout
General Tolerance±0.05

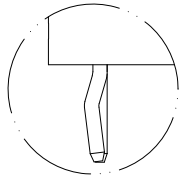

Reverse Kink(K1)

■ Specifications :

- Voltage rating: 100V AC / DC
- Current rating: 2A AC / DC
- Withstanding voltage: 800V AC/minute
- Temperature range: -25°C~+85°C
- Insulation resistance:≥1000MΩ
- Contact resistance: ≤10mΩ
- After environmental testing：≤20mΩ

X2016 W V X-XX KX -N0 SN XX
① ② ③ ④ ⑤ ⑥ ⑦ ⑧ ⑨

① Series No.
② Category：W-WAFER
③ Welding Board Angle：V-Straight 180°
④ Welding Way: Blank-DIP
⑤ Row No.-Pin No.: XX-02P~20P
⑥ Plug the Pin & Special No.: K-Kink ; K1- Reverse Kink ;
⑦ Material: 46 -PA46 94V-0 ; N0-PA66 94V-0
⑧ Plating Category: SN-Bright Tin Plating ; V01-Gold Flash
⑨ Color : Blank-Natural Color ; GY-Gray

Poles	Dimensions (mm)			Poles	Dimensions (mm)			Poles	Dimensions (mm)		
	A	B	C		A	B	C		A	B	C
02	2.00	6.00	4.80	09	16.00	20.00	18.80	16	30.00	34.00	32.80
03	4.00	8.00	6.80	10	18.00	22.00	20.80	17	32.00	36.00	34.80
04	6.00	10.00	8.80	11	20.00	24.00	22.80	18	34.00	38.00	36.80
05	8.00	12.00	10.80	12	22.00	26.00	24.80	19	36.00	40.00	38.80
06	10.00	14.00	12.80	13	24.00	28.00	26.80	20	38.00	42.00	40.80
07	12.00	16.00	14.80	14	26.00	30.00	28.80				
08	14.00	18.00	16.80	15	28.00	32.00	30.80				

PART N0	Material	Material(Pin)	Finish(Pin)	Suitable XKB Terminal
X2016WV-XXKX-46SNGY	Nylon 46 UL 94V-0 Gray	Brass	Tin-Plated	X2016H
X2016WV-XXKX-N0V01	Nylon 66 UL 94V-0		Gold-Flash	
X2016WV-XXKX-N0SN			Tin-Plated	

For and on behalf of
XKB INDUSTRIAL PRECISION CO., LIMITED
香港星坤工業精密有限公司
Authorized Signature(s)

MARK	DESCRIPTION	DATE	REVISED	APPROVED
△ X				
△ X				
△ X				

REVISIONS

UNSPECIFIED TOLERANCES	
ANGULAR	±5°
L≤4	±0.2
4<L≤16	±0.3
16<L≤63	±0.4
L>63	±0.5

DSND		DATE		SCALE: N/A	MODEL TYPE: X2016WV-XXKX-XXXXX
DWN		DATE		VIEW:	PART NO.: 2.00 mm Crimp Style Connectors
CHKD		DATE		UNIT: mm	DWG NO.:
APPD		DATE		SIZE: A4	

XKB INDUSTRIAL PRECISION CO.,LIMITED

WEIGHT	SHEET	REVISION
1.0g	1/1	A0

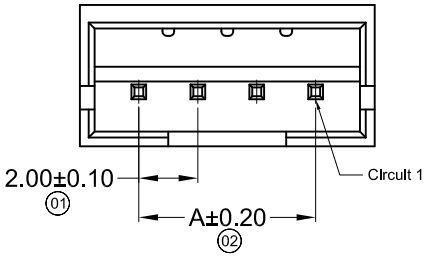

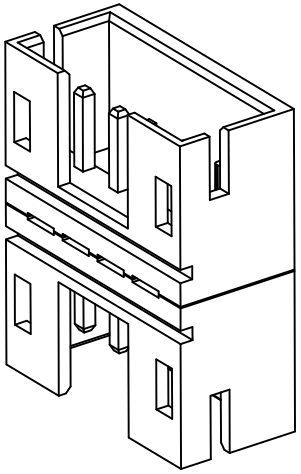

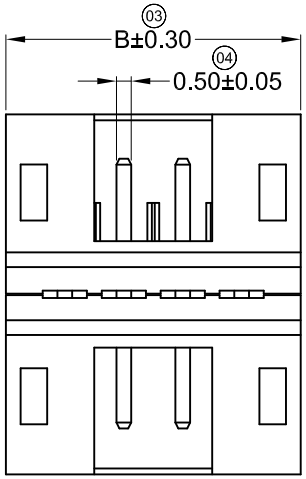

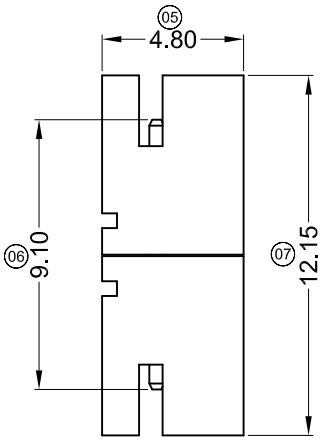

■ Specifications :

- Voltage rating: 100V AC / DC
- Current rating: 2A AC / DC
- Withstanding voltage: 800V AC/minute
- Temperature range: -25°C~+85°C
- Insulation resistance:≥1000MΩ
- Contact resistance: ≤10mΩ
- After environmental testing: ≤20mΩ

X2016 W V X-XX H2 -N0 SN XX
① ② ③ ④ ⑤ ⑥ ⑦ ⑧ ⑨

① Series No.
② Category: W-WAFER
③ Welding Board Angle: V-180° ; R-90°
④ Welding Way: Blank-DIP ; S-SMT
⑤ Row No.-Pin No.: XX-Single Row ; 2*XX-Double Row
⑥ Plug the Pin & Special No. : H2- Double sided insert
⑦ Material: N0 -PA66 94V-0 ; 6T-PA6T 94V-0 ; 46-PA46
⑧ Plating Category: G**-Gold Plated Contact
V**- All Gold-Plated
01-Gold Flash 02-2u" 03-3u"
05-5u" 10-10u" 15-15u"
SN-Bright Tin Plating (70-120u")
SN1-Bright Tin Plating (120u" Min).
0-No Plating Material
SW- Fog Tin Plating
HS-Hight temperature Tin
⑨ Color : Blank-Natural Color

Poles	Dimensions (mm)	
	A	B
02	2.00	6.00
03	4.00	8.00
04	6.00	10.00
05	8.00	12.00
06	10.00	14.00
07	12.00	16.00
08	14.00	18.00
09	16.00	20.00
10	18.00	22.00
11	20.00	24.00
12	22.00	26.00
13	24.00	28.00
14	26.00	30.00
15	28.00	32.00
16	30.00	34.00
17	32.00	36.00
18	34.00	38.00
19	36.00	40.00
20	38.00	42.00

PART N0	Material	Material(Pin)	Finish(Pin)	Suitable XKB Terminal	Q'ty/Bag
X2016WV-XXH2-N0SN	Nylon 66 UL 94V-0	Brass	Tin-Plated	X2016H	1,000Pcs

For and on behalf of
XKB INDUSTRIAL PRECISION CO., LIMITED
香港星坤工業精密有限公司
Authorized Signature(s)

MARK	DESCRIPTION	DATE	REVISED	APPROVED
△ X				
△ X				
△ X				

REVISIONS

UNSPECIFIED TOLERANCES	
ANGULAR	±5°
L≤4	±0.2
4< L≤16	±0.3
16< L≤63	±0.4
L> 63	±0.5

DSND		DATE		SCALE: N/A
DWN		DATE		VIEW:
CHKD		DATE		UNIT: mm
APPD		DATE		SIZE: A4

MODEL TYPE: 2016WV-XXH2-N0SN
PART NO.: 2.00 mm Crimp Style Connector
DWG NO.:

XKB INDUSTRIAL PRECISION CO.,LIMITED

WEIGHT	SHEET	REVISION
1.0g	1/1	A0

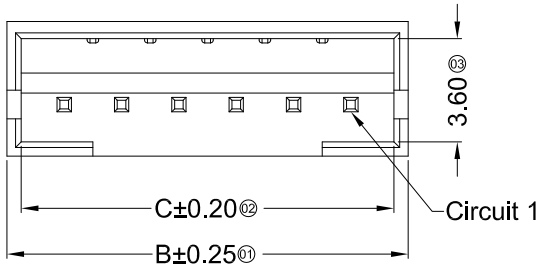

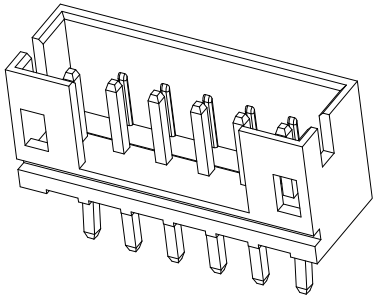

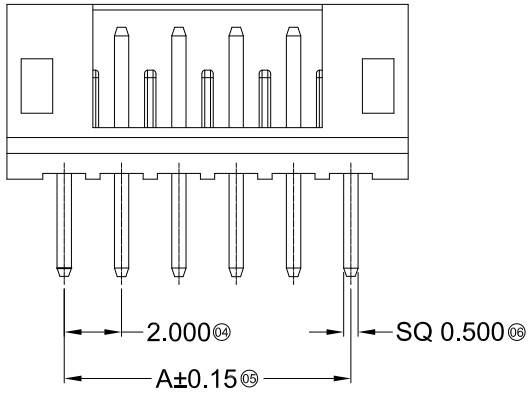

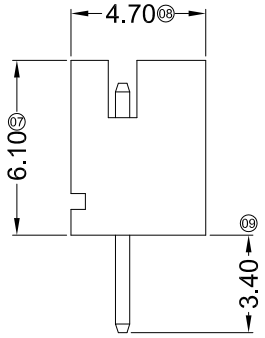

■ Specifications：

- Voltage rating: 100V AC / DC
- Current rating: 2A AC / DC
- Withstanding voltage: 800V AC/minute
- Temperature range: -25°C~+85°C
- Insulation resistance:≥1000MΩ
- Contact resistance: ≤10mΩ
- After environmental testing：≤20mΩ

X2016 W V X-XX XX -N0 SN XX
① ② ③ ④ ⑤ ⑥ ⑦ ⑧ ⑨

① Series No.
② Category：W-WAFER
③ Welding Board Angle：V-Straight 180°
④ Welding Way: Blank-DIP
⑤ Row No.-Pin No.: XX-02P~20P
⑥ Plug the Pin & Special No.: Blank-Without Kink
⑦ Material: 46 -PA46 94V-0 ; N0-PA66 94V-0 ;
6T-PA6T 94V-0
⑧ Plating Category: SN-Bright Tin Plating
⑨ Color : Blank-Natural Color ; GY-Gray

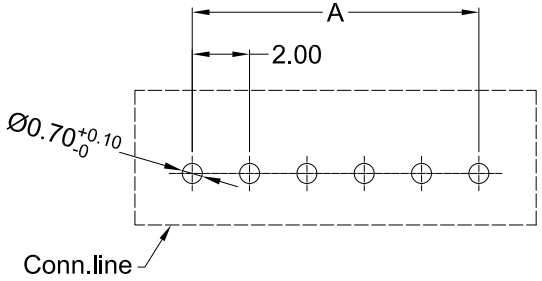

Recommended P.C.B Layout
General Tolerance±0.05

Poles	Dimensions (mm)			Poles	Dimensions (mm)			Poles	Dimensions (mm)		
	A	B	C		A	B	C		A	B	C
02	2.00	6.00	5.00	09	16.00	20.00	19.00	16	30.00	34.00	33.00
03	4.00	8.00	7.00	10	18.00	22.00	21.00	17	32.00	36.00	35.00
04	6.00	10.00	9.00	11	20.00	24.00	23.00	18	34.00	38.00	37.00
05	8.00	12.00	11.00	12	22.00	26.00	25.00	19	36.00	40.00	39.00
06	10.00	14.00	13.00	13	24.00	28.00	27.00	20	38.00	42.00	41.00
07	12.00	16.00	15.00	14	26.00	30.00	29.00				
08	14.00	18.00	17.00	15	28.00	32.00	31.00				

X2016WV-XX-6TSN	Nylon 6T UL94V-0	Brass	Tin-Plated	X2016H
X2016WV-XX-46SN	Nylon 46 UL 94V-0			
X2016WV-XX-N0SN	Nylon 66 UL 94V-0			
PART N0	Material	Material(Pin)	Finish(Pin)	Suitable XKB Terminal

For and on behalf of
XKB INDUSTRIAL PRECISION CO., LIMITED
香港星坤工業精密有限公司
Authorized Signature(s)

MARK	DESCRIPTION	DATE	REVISED	APPROVED
△ X				
△ X				
△ X				

REVISIONS

UNSPECIFIED TOLERANCES	
ANGULAR	±5°
L≤4	±0.2
4<L≤16	±0.3
16<L≤63	±0.4
L>63	±0.5

DSND		DATE		SCALE: N/A	MODEL TYPE: X2016WV-XX-XXSN
DWN		DATE		VIEW:	PART NO.: 2.00 mm Crimp Style Connectors
CHKD		DATE		UNIT: mm	DWG NO.:
APPD		DATE		SIZE: A4	

XKB INDUSTRIAL PRECISION CO.,LIMITED

WEIGHT	SHEET	REVISION
1.0g	1/1	A0

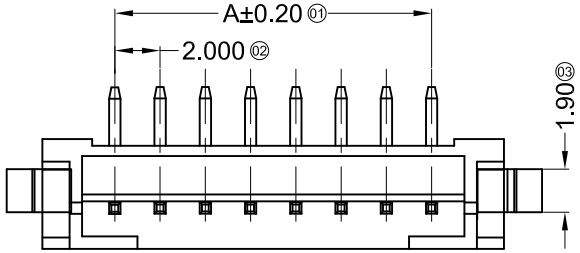

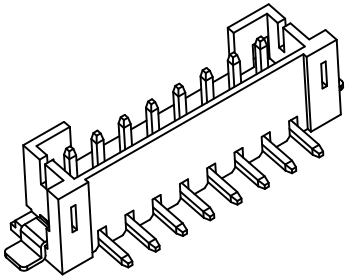

■ Specifications :

- Voltage rating: 100V AC / DC
- Current rating: 2A AC / DC
- Withstanding voltage: 800V AC/minute
- Temperature range: -25°C~+85°C
- Insulation resistance:≥1000MΩ
- Contact resistance: ≤10mΩ
- After environmental testing: ≤20mΩ

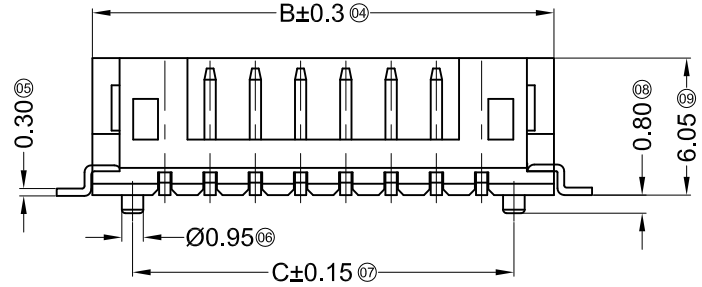

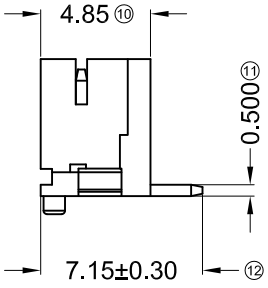

X2016 W V S-XX S -46 SN XX
① ② ③ ④ ⑤ ⑥ ⑦ ⑧ ⑨

① Series No.
② Category: W-WAFER
③ Welding Board Angle: V-Straight 180°
④ Welding Way: S-SMT
⑤ Row No.-Pin No.: XX-02P~20P
⑥ Plug the Pin & Special No.:
S-With positioning column
⑦ Material: 46 -PA46 94V-0;
⑧ Plating Category: SN-Bright Tin Plating
⑨ Color : Blank-Natural Color

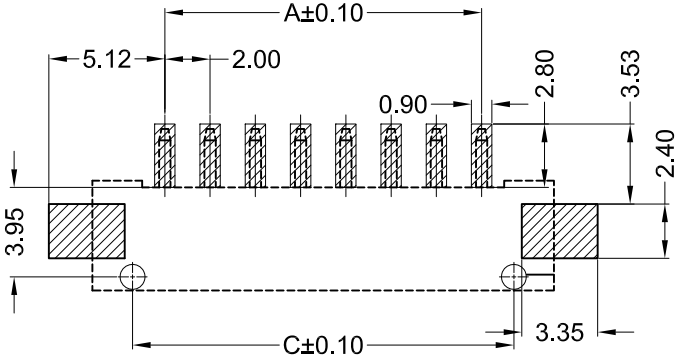

Recommended P.C.B Layout
General Tolerance±0.05

Poles	Dimensions (mm)			Poles	Dimensions (mm)		
	A	B	C		A	B	C
02	2.00	8.40	4.85	09	16.00	22.40	18.85
03	4.00	10.40	6.85	10	18.00	24.40	20.85
04	6.00	12.40	8.85	11	20.00	26.40	22.85
05	8.00	14.40	10.85	12	22.00	28.40	24.85
06	10.00	16.40	12.85	13	24.00	30.40	26.85
07	12.00	18.40	14.85	14	26.00	32.40	28.85
08	14.00	20.40	16.85	15	28.00	34.40	30.85

X2016WVS-XXS-46SN	PA46 UL 94V-0	Brass	Tin-Plated	X2016H
PART N0	Material	Material(Pin and Solder Tabs)	Finish(Pin and Solder Tabs)	Suitable XKB Terminal

For and on behalf of
XKB INDUSTRIAL PRECISION CO., LIMITED
香港星坤工業精密有限公司
Authorized Signature(s)

MARK	DESCRIPTION	DATE	REVISED	APPROVED
△ X				
△ X				
△ X				

REVISIONS

ANGULAR	±5°
L≤4	±0.2
4< L≤16	±0.3
16< L≤63	±0.4
L> 63	±0.5

UNSPECIFIED TOLERANCES

DSND		DATE		SCALE: N/A	MODEL TYPE: X2016WVS-XXS-46SN
DWN		DATE		VIEW:	PART NO.: 2.00 mm Crimp Style Connectors
CHKD		DATE		UNIT: mm	DWG NO.:
APPD		DATE		SIZE: A4	

XKB INDUSTRIAL PRECISION CO.,LIMITED

WEIGHT	SHEET	REVISION
1.0g	1/1	A0

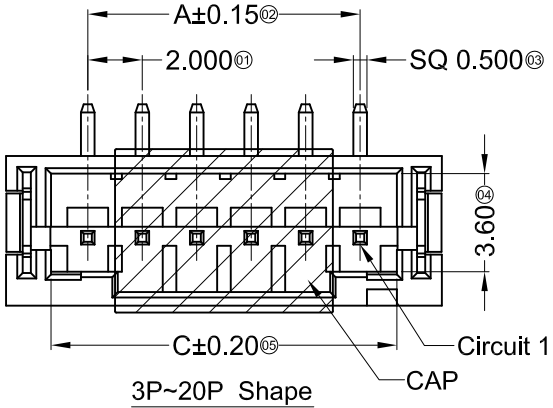

3P~20P Shape
Scale 1:1

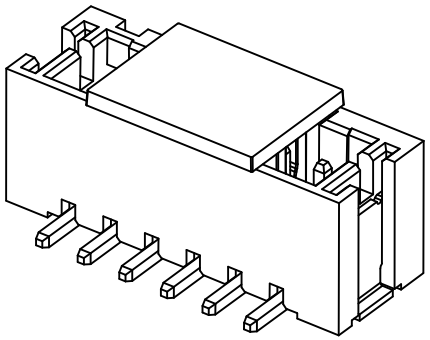

■ Specifications :

- Voltage rating: 100V AC / DC
- Current rating: 2A AC / DC
- Withstanding voltage: 800V AC/minute
- Temperature range: -25°C~+85°C
- Insulation resistance:≥1000MΩ
- Contact resistance: ≤10mΩ
- After environmental testing: ≤20mΩ

X2016 W V S-XX X -XX XXX XX
① ② ③ ④ ⑤ ⑥ ⑦ ⑧ ⑨

① Series No.
② Category: W-WAFER
③ Welding Board Angle: V-Straight 180°
④ Welding Way: S-SMT
⑤ Row No.-Pin No.: XX-02P~20P
⑥ Plug the Pin & Special No.
⑦ Material: LP -LCP 94V-0; 9T -PA9T 94V-0
⑧ Plating Category: SW-Matte Tin Plating; V01- Gold Flash
⑨ Color : HF-Halogen Free;

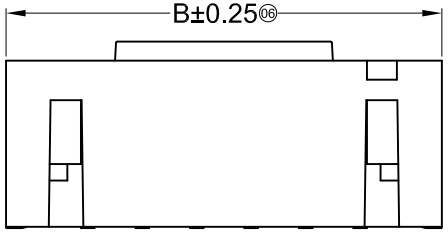

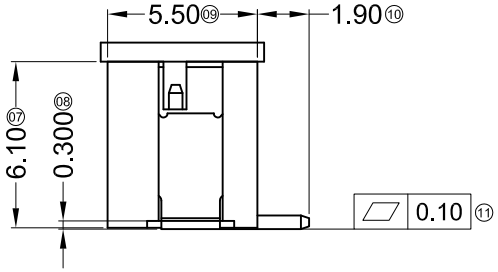

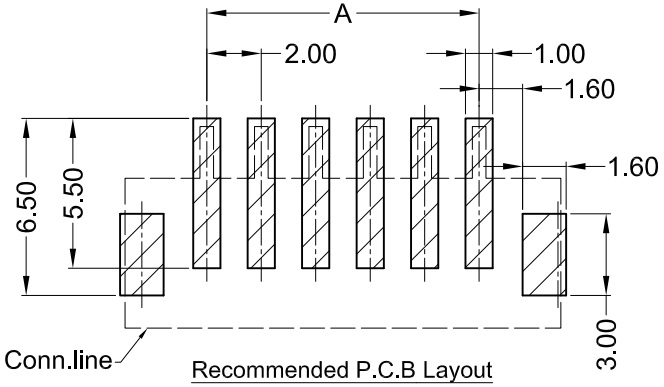

Recommended P.C.B Layout
General Tolerance±0.05

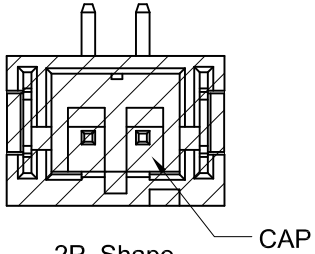

2P Shape
Scale 1:1

Poles	Dimensions (mm)			Poles	Dimensions (mm)			Poles	Dimensions (mm)		
	A	B	C		A	B	C		A	B	C
02	2.00	8.00	4.70	09	16.00	22.00	18.70	16	30.00	36.00	32.70
03	4.00	10.00	6.70	10	18.00	24.00	20.70	17	32.00	38.00	34.70
04	6.00	12.00	8.70	11	20.00	26.00	22.70	18	34.00	40.00	36.70
05	8.00	14.00	10.70	12	22.00	28.00	24.70	19	36.00	42.00	38.70
06	10.00	16.00	12.70	13	24.00	30.00	26.70	20	38.00	44.00	40.70
07	12.00	18.00	14.70	14	26.00	32.00	28.70				
08	14.00	20.00	16.70	15	28.00	34.00	30.70				

X2016WVS-XX-LPSWHF	LCP UL 94V-0 Halogen Free	Brass	Tin-Plated	Phosphor Bronze	Tin-Plated	X2016H
X2016WVS-XX-LPSW	LCP UL 94V-0		Matte Tin-Plated		Matte Tin-Plated	
X2016WVS-XX-9TV01	PA9T UL 94V-0		Gold-Flash		Gold-Flash	
X2016WVS-XX-9TSW			Matte Tin-Plated		Matte Tin-Plated	
PART N0	Material	Material(Pin)	Finish(Pin)	Material (Solder Tabs)	Finish (Solder Tabs)	Suitable XKB Termina

For and on behalf of
XKB INDUSTRIAL PRECISION CO., LIMITED
香港星坤工業精密有限公司
Authorized Signature(s)

MARK	DESCRIPTION	DATE	REVISED	APPROVED
△ X				
△ X				
△ X				

REVISIONS

UNSPECIFIED TOLERANCES	
ANGULAR	±5°
L≤4	±0.2
4<L≤16	±0.3
16<L≤63	±0.4
L>63	±0.5

DSND		DATE		SCALE: N/A	MODEL TYPE: 2016WVS-XX-XXXXXXX
DWN		DATE		VIEW:	PART NO.: 2.00mm Crimp Style Connectors
CHKD		DATE		UNIT: mm	DWG NO.:
APPD		DATE		SIZE: A4	

XKB INDUSTRIAL PRECISION CO.,LIMITED

WEIGHT	SHEET	REVISION
1.0g	1/1	A0

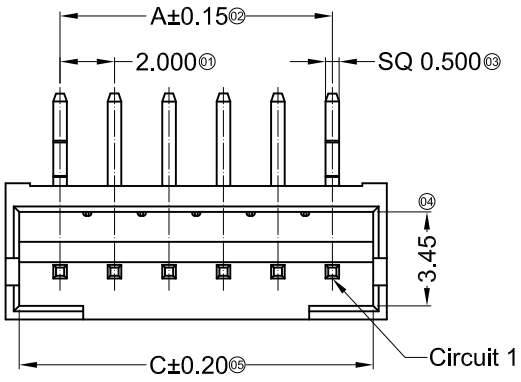

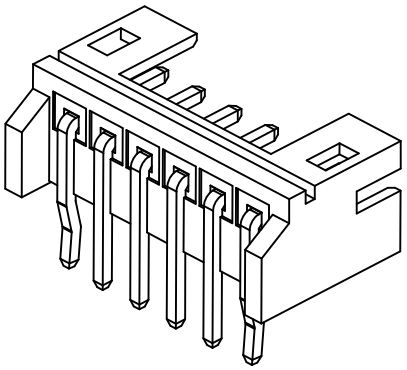

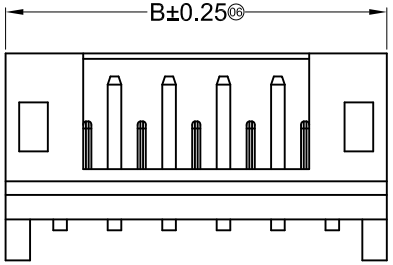

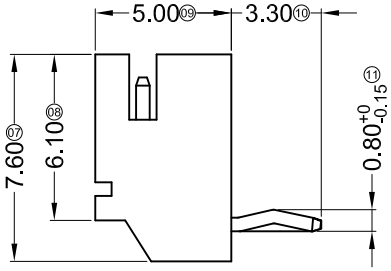

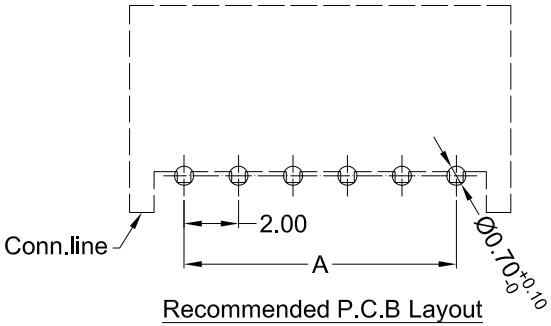

Recommended P.C.B Layout
General Tolerance±0.05

■ Specifications :

- Voltage rating: 100V AC / DC
- Current rating: 2A AC / DC
- Withstanding voltage: 800V AC/minute
- Temperature range: -25°C~+85°C
- Insulation resistance:≥1000MΩ
- Contact resistance: ≤10mΩ
- After environmental testing：≤20mΩ

X2016 W R X-XX K -N0 SN XX
① ② ③④ ⑤ ⑥ ⑦ ⑧ ⑨

① Series No.
② Category：W-WAFER
③ Welding Board Angle： R-Right Angle 90°
④ Welding Way: Blank-DIP
⑤ Row No.-Pin No.: XX-02P~20P
⑥ Plug the Pin & Special No.: K-Kink, DIP=3.30mm
⑦ Material: N0-PA66 94V-0
⑧ Plating Category: SN-Bright Tin Plating
⑨ Color : Blank-Natural Color;

Poles	Dimensions (mm)			Poles	Dimensions (mm)			Poles	Dimensions (mm)		
	A	B	C		A	B	C		A	B	C
02	2.00	6.00	5.00	09	16.00	20.00	19.00	16	30.00	34.00	33.00
03	4.00	8.00	7.00	10	18.00	22.00	21.00	17	32.00	36.00	35.00
04	6.00	10.00	9.00	11	20.00	24.00	23.00	18	34.00	38.00	37.00
05	8.00	12.00	11.00	12	22.00	26.00	25.00	19	36.00	40.00	39.00
06	10.00	14.00	13.00	13	24.00	28.00	27.00	20	38.00	42.00	41.00
07	12.00	16.00	15.00	14	26.00	30.00	29.00				
08	14.00	18.00	17.00	15	28.00	32.00	31.00				

X2016WR-XXK-N0SN	Nylon 66 UL 94V-0	Brass	Tin-Plated	X2016H
PART N0	Material	Material(Pin)	Finish(Pin)	Suitable XKB Terminal

For and on behalf of
XKB INDUSTRIAL PRECISION CO., LIMITED
香港星坤工業精密有限公司
Authorized Signature(s)

MARK	DESCRIPTION	DATE	REVISED	APPROVED
△ X				
△ X				
△ X				

REVISIONS

UNSPECIFIED TOLERANCES	
ANGULAR	±5°
L≤4	±0.2
4<L≤16	±0.3
16<L≤63	±0.4
L>63	±0.5

DSND		DATE		SCALE: N/A	MODEL TYPE: 2016WR-XXK-N0SN
DWN		DATE		VIEW:	PART NO.: 2.00mm Crimp Style Connectors
CHKD		DATE		UNIT: mm	DWG NO.:
APPD		DATE		SIZE: A4	

XKB INDUSTRIAL PRECISION CO.,LIMITED

WEIGHT	SHEET	REVISION
1.0g	1/1	A0

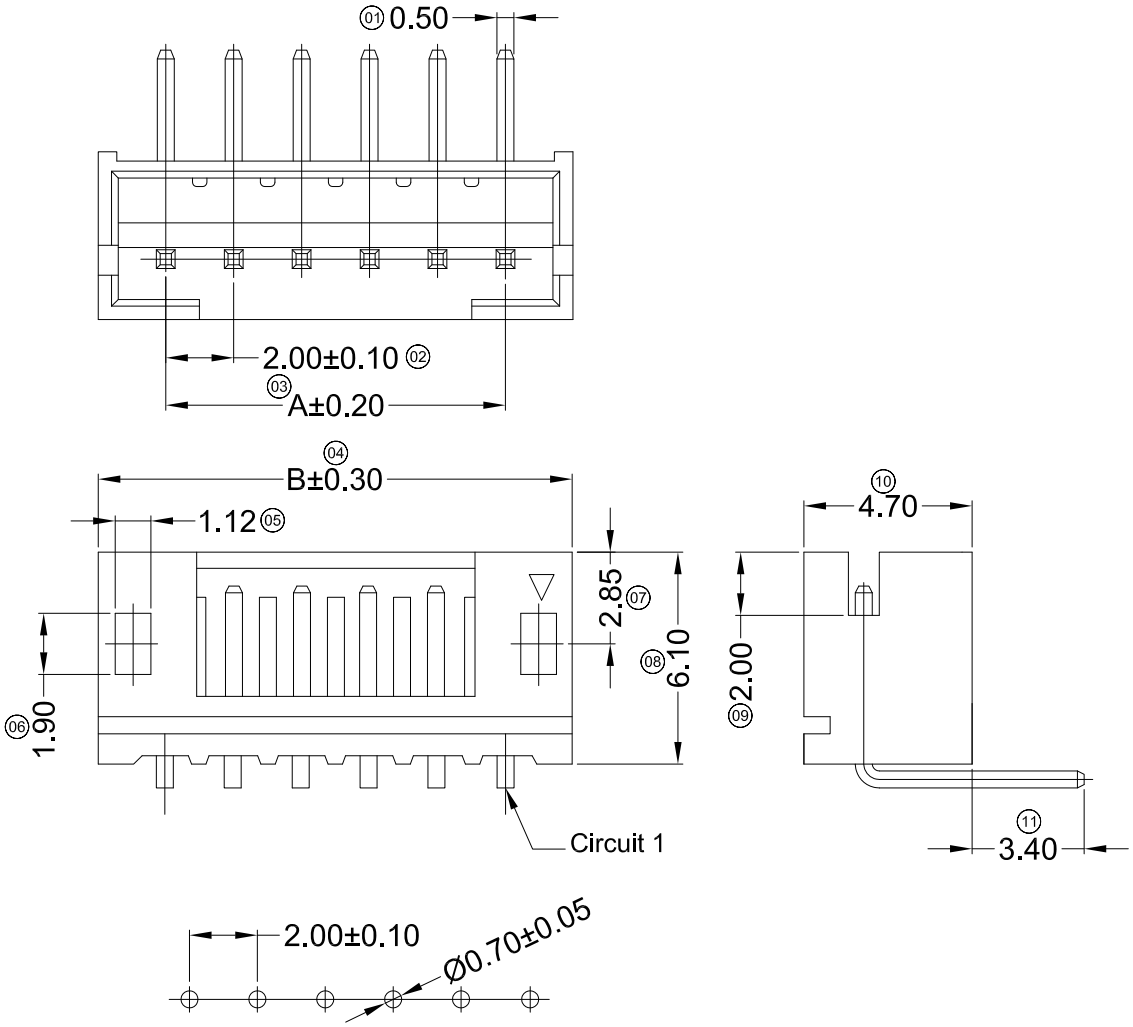

Recommand PCB Layout

■ Specifications :

- Voltage rating: 100V AC / DC
- Current rating: 2A AC / DC
- Withstanding voltage: 800V AC/minute
- Temperature range: -25°C~+85°C
- Insulation resistance:≥1000MΩ
- Contact resistance: ≤10mΩ
- After environmental testing：≤20mΩ

X2016 W R X-XX B -N0 SN XX
① ② ③ ④ ⑤ ⑥ ⑦ ⑧ ⑨

① Series No.
② Category：W-WAFER
③ Welding Board Angle：V-180° ; R-90°
④ Welding Way: Blank-DIP ; S-SMT
⑤ Row No.-Pin No.: XX-Single Row ; 2*XX-Double Row
⑥ Plug the Pin & Special No. :
B-With Groove ; Without Link Stopper
⑦ Material: N0 -PA66 94V-0
⑧ Plating Category: G**-Gold Plated Contact
V**- All Gold-Plated
01-Gold Flash 02-2u" 03-3u"
05-5u" 10-10u" 15-15u"
SN-Bright Tin Plating (70-120u")
SN1-Bright Tin Plating (120u" Min).
0-No Plating Material
SW- Fog Tin Plating
HS-Hight temperature Tin
⑨ Color : Blank-Natural Color

Poles	Dimensions (mm)	
	A	B
02	2.00	6.00
03	4.00	8.00
04	6.00	10.00
05	8.00	12.00
06	10.00	14.00
07	12.00	16.00
08	14.00	18.00
09	16.00	20.00
10	18.00	22.00
11	20.00	24.00
12	22.00	26.00
13	24.00	28.00
14	26.00	30.00
15	28.00	32.00
16	30.00	34.00
17	32.00	36.00
18	34.00	38.00
19	36.00	40.00
20	38.00	42.00

PART N0	Material	Material(Pin)	Finish(Pin)	Suitable XKB Terminal	Q'ty/Bag
X2016WR-XXB-N0SN	Nylon 66 UL 94V-0	Brass	Tin-Plated	X2016H	1,000Pcs

For and on behalf of
XKB INDUSTRIAL PRECISION CO., LIMITED
香港星坤工業精密有限公司
Authorized Signature(s)

MARK	DESCRIPTION	DATE	REVISED	APPROVED
△ X				
△ X				
△ X				

REVISIONS

UNSPECIFIED TOLERANCES	
ANGULAR	±5°
L≤4	±0.2
4< L≤16	±0.3
16< L≤63	±0.4
L> 63	±0.5

DSND		DATE		SCALE: N/A
DWN		DATE		VIEW:
CHKD		DATE		UNIT: mm
APPD		DATE		SIZE: A4

XKB INDUSTRIAL PRECISION CO.,LIMITED

MODEL TYPE: X2016WR-XXB-N0SN
PART NO.: 2.00 mm Crimp Style Connector
DWG NO.:

WEIGHT	SHEET	REVISION
1.0g	1/1	A0

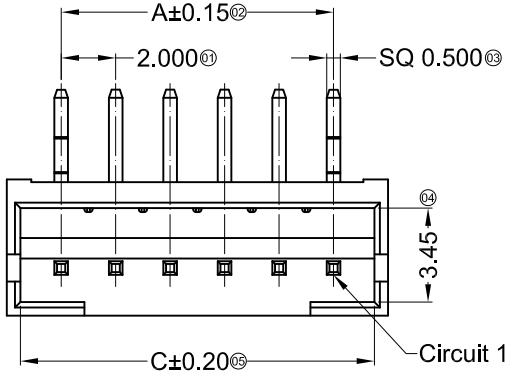

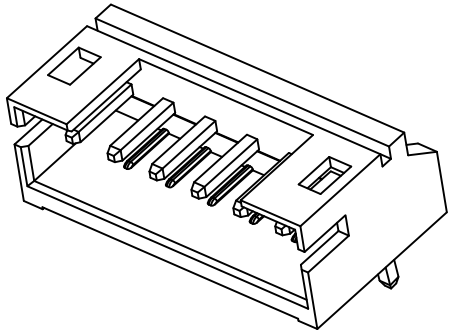

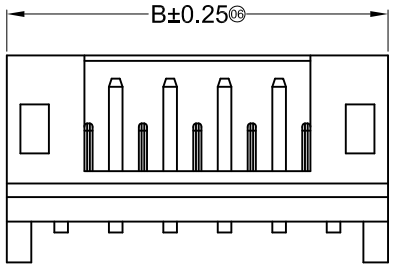

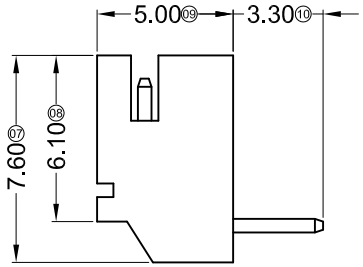

■ Specifications：

- Voltage rating: 100V AC / DC
- Current rating: 2A AC / DC
- Withstanding voltage: 800V AC/minute
- Temperature range: -25°C~+85°C
- Insulation resistance:≥1000MΩ
- Contact resistance: ≤10mΩ
- After environmental testing：≤20mΩ

X2016 W R X-XX XX -N0 SN XX
① ② ③ ④ ⑤ ⑥ ⑦ ⑧ ⑨

① Series No.
② Category：W-WAFER
③ Welding Board Angle： R-Right Angle 90°
④ Welding Way: Blank-DIP
⑤ Row No.-Pin No.: XX-02P~20P
⑥ Plug the Pin & Special No.: Blank-Without Kink
⑦ Material: N0-PA66 94V-0
⑧ Plating Category: SN-Bright Tin Plating
⑨ Color： Blank-Natural Color;

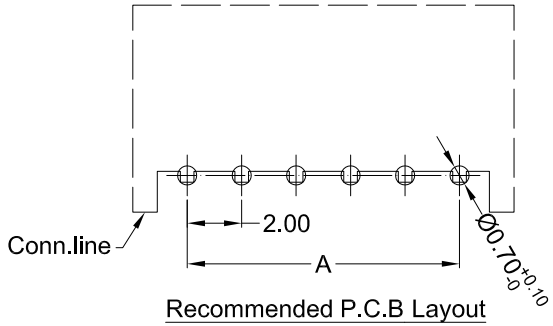

Recommended P.C.B Layout
General Tolerance±0.05

Poles	Dimensions (mm)			Poles	Dimensions (mm)			Poles	Dimensions (mm)		
	A	B	C		A	B	C		A	B	C
02	2.00	6.00	5.00	09	16.00	20.00	19.00	16	30.00	34.00	33.00
03	4.00	8.00	7.00	10	18.00	22.00	21.00	17	32.00	36.00	35.00
04	6.00	10.00	9.00	11	20.00	24.00	23.00	18	34.00	38.00	37.00
05	8.00	12.00	11.00	12	22.00	26.00	25.00	19	36.00	40.00	39.00
06	10.00	14.00	13.00	13	24.00	28.00	27.00	20	38.00	42.00	41.00
07	12.00	16.00	15.00	14	26.00	30.00	29.00				
08	14.00	18.00	17.00	15	28.00	32.00	31.00				

X2016WR-XX-N0SN	Nylon 66 UL 94V-0	Brass	Tin-Plated	X2016H
PART N0	Material	Material(Pin)	Finish(Pin)	Suitable XKB Terminal

For and on behalf of
XKB INDUSTRIAL PRECISION CO., LIMITED
香港星坤工業精密有限公司
Authorized Signature(s)

MARK	DESCRIPTION	DATE	REVISED	APPROVED
△X				
△X				
△X				

REVISIONS

UNSPECIFIED TOLERANCES	
ANGULAR	±5°
L≤4	±0.2
4<L≤16	±0.3
16<L≤63	±0.4
L>63	±0.5

DSND		DATE		SCALE: N/A
DWN		DATE		VIEW:
CHKD		DATE		UNIT: mm
APPD		DATE		SIZE: A4

MODEL TYPE: 2016WR-XX-N0SN
PART NO.: 2.00 mm Crimp Style Connectors
DWG NO.:

XKB INDUSTRIAL PRECISION CO.,LIMITED

WEIGHT	SHEET	REVISION
1.0g	1/1	A0

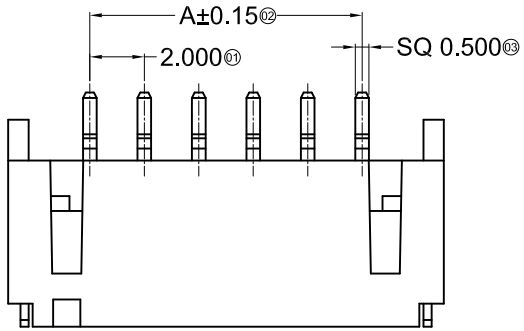

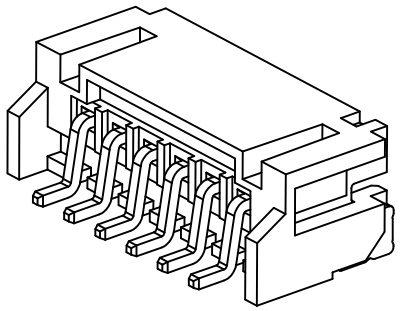

■ Specifications：

- Voltage rating: 100V AC / DC
- Current rating: 2A AC / DC
- Withstanding voltage: 800V AC/minute
- Temperature range: -25°C~+85°C
- Insulation resistance:≥1000MΩ
- Contact resistance: ≤10mΩ
- After environmental testing：≤20mΩ

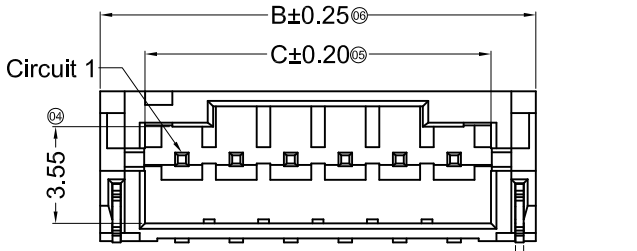

3P~20P Shape
Scale 1:1

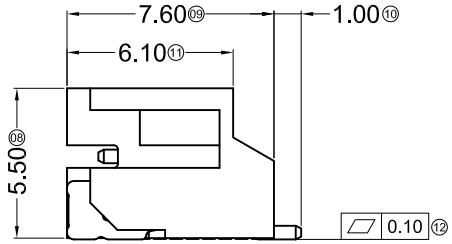

X2016 W R S-XX X -XX XXX XX
① ② ③ ④ ⑤ ⑥ ⑦ ⑧ ⑨

① Series No.
② Category：W-WAFER
③ Welding Board Angle： R-Right Angle 90°
④ Welding Way: S-SMT
⑤ Row No.-Pin No.: XX-02P~20P
⑥ Plug the Pin & Special No.
⑦ Material: 9T -PA9T 94V-0 LP -LCP 94V-0
⑧ Plating Category: SW-Matte Tin Plating; V15- Gold 15u"
SN-Bright Tin Plating
⑨ Color : HF-Halogen Free; Blank-Natural Color; Bk-Black

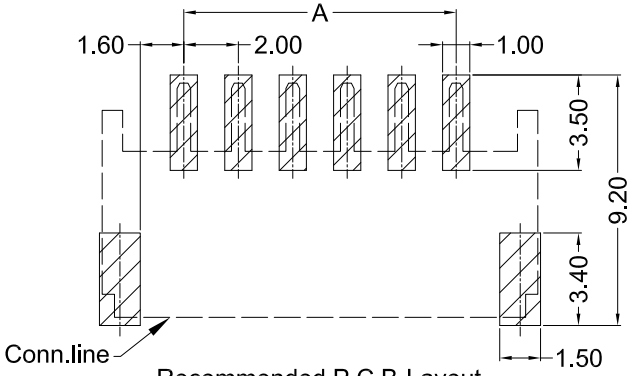

Recommended P.C.B Layout
General Tolerance±0.05

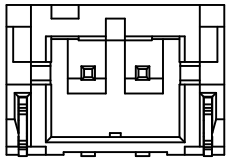

2P Shape
Scale 1:1

Poles	Dimensions (mm)			Poles	Dimensions (mm)			Poles	Dimensions (mm)		
	A	B	C		A	B	C		A	B	C
02	2.00	8.00	4.70	09	16.00	22.00	18.70	16	30.00	36.00	32.70
03	4.00	10.00	6.70	10	18.00	24.00	20.70	17	32.00	38.00	34.70
04	6.00	12.00	8.70	11	20.00	26.00	22.70	18	34.00	40.00	36.70
05	8.00	14.00	10.70	12	22.00	28.00	24.70	19	36.00	42.00	38.70
06	10.00	16.00	12.70	13	24.00	30.00	26.70	20	38.00	44.00	40.70
07	12.00	18.00	14.70	14	26.00	32.00	28.70				
08	14.00	20.00	16.70	15	28.00	34.00	30.70				

X2016WRS-XX-9TSN	PA9T UL 94V-0	Brass	Tin-Plated	Brass	Tin-Plated	X2016H
X2016WRS-XX-LPSWHF	LCP UL 94V-0 Halogen Free		Matte Tin-Plated		Matte Tin-Plated	
X2016WRS-XX-LPSW	LCP UL 94V-0		Matte Tin-Plated		Matte Tin-Plated	
X2016WRS-XX-9TV15BK	PA9T UL 94V-0 Black		Gold15u"		Gold-Flash	
X2016WRS-XX-9TSW	PA9T UL 94V-0		Matte Tin-Plated		Matte Tin-Plated	
PART N0	Materlal	Materlal(Pln)	Flnlsh(Pln)	Material (Solder Tabs)	Finish (Solder Tabs)	Suitable XKB Terminal

For and on behalf of
XKB INDUSTRIAL PRECISION CO., LIMITED
香港星坤工業精密有限公司
Authorized Signature(s)

MARK	DESCRIPTION	DATE	REVISED	APPROVED
△ X				
△ X				
△ X				

REVISIONS

UNSPECIFIED TOLERANCES	
ANGULAR	±5°
L≤4	±0.2
4< L≤16	±0.3
16< L≤63	±0.4
L> 63	±0.5

DSND		DATE		SCALE: N/A	MODEL TYPE: X2016WRS-XX-XXXXXXX
DWN		DATE		VIEW:	PART NO.: 2.00mm Crimp Style Connectors
CHKD		DATE		UNIT: mm	DWG NO.:
APPD		DATE		SIZE: A4	

XKB INDUSTRIAL PRECISION CO.,LIMITED

WEIGHT	SHEET	REVISION
1.0g	1/1	A0

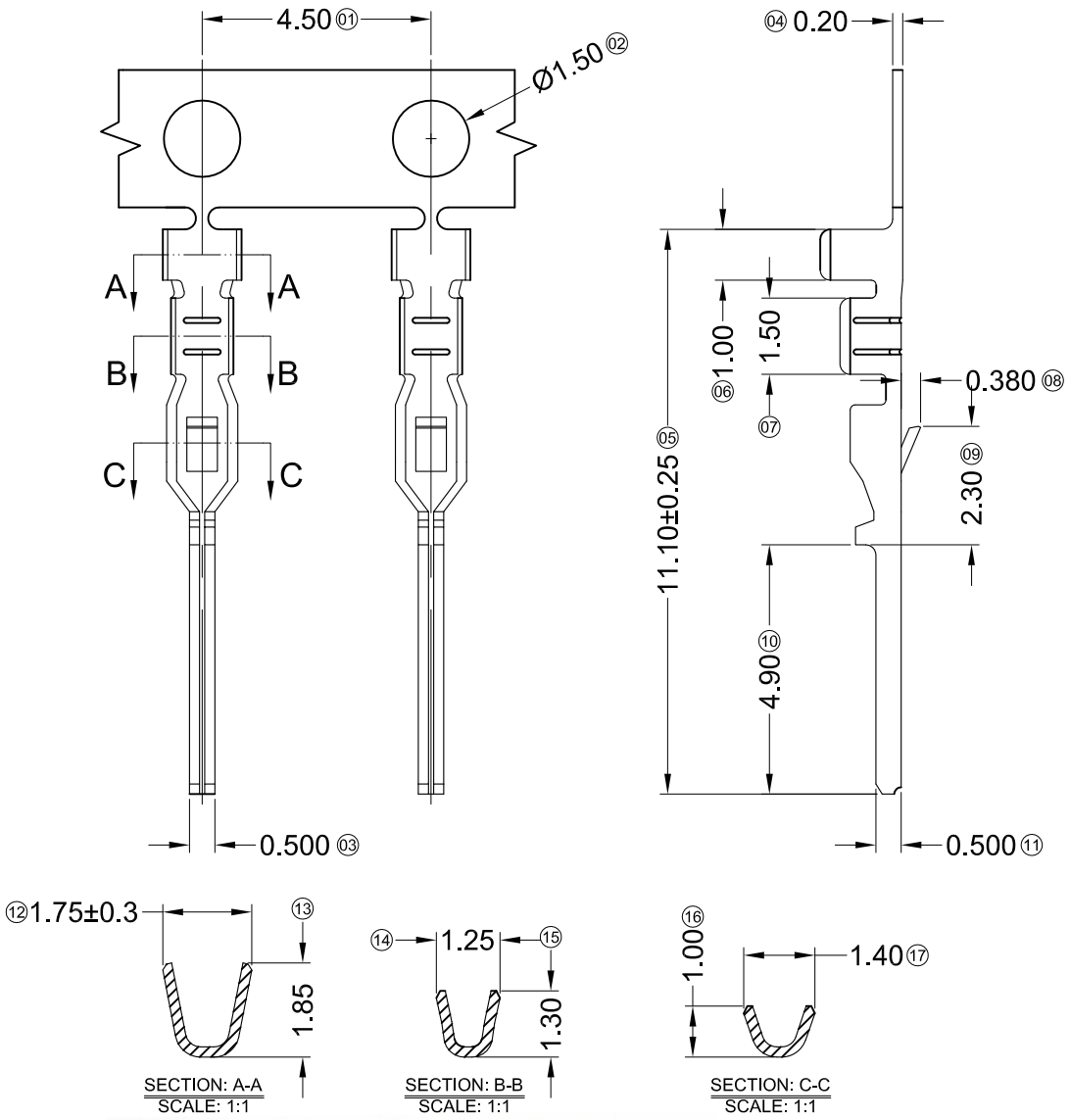

■ Specifications :

- Voltage rating: 100V AC / DC
- Current rating: 2A AC / DC
- Withstanding voltage: 800V AC/minute
- Temperature range: -25°C~+85°C
- Insulation resistance:≥1000MΩ
- Contact resistance: ≤10mΩ
- After environmental testing：≤20mΩ

X2016 T M-P SN X - X
① ② ③ ④ ⑤ ⑥ ⑦

① Series Number
② Category: T-terminal
③ Shape：M-Male
④ Material：P-Phosphor bronze
⑤ Plating style: SN-Bright tin plating
⑥ Plating method：Blank-Stamping before plating
⑦ Mold No./Mark/Special No.

PART N0	Material	Wire Range	Insulation O.D.	Finish	Suitable XKB Terminal
X2016TM-PSN	Phosphor Bronze	AWG#26-28	1.30mm(Max)	Stamping Before plating:30u" MIN. Ni; 70u"Sn	X2016HF

For and on behalf of
XKB INDUSTRIAL PRECISION CO., LIMITED
香港星坤工業精密有限公司
Authorized Signature(s)

MARK	DESCRIPTION	DATE	REVISED	APPROVED
△ X				
△ X				
△ X				

REVISIONS

UNSPECIFIED TOLERANCES	
ANGULAR	±5°
L≤4	±0.2
4<L≤16	±0.3
16<L≤63	±0.4
L>63	±0.5

DSND		DATE		SCALE: N/A
DWN		DATE		VIEW:
CHKD		DATE		UNIT: mm
APPD		DATE		SIZE: A4

MODEL TYPE: X2016TM-PSN
PART NO.: 2.00 mm Crimp Style Connectors
DWG NO.:

XKB INDUSTRIAL PRECISION CO.,LIMITED

WEIGHT	SHEET	REVISION
1.0g	1/1	A0

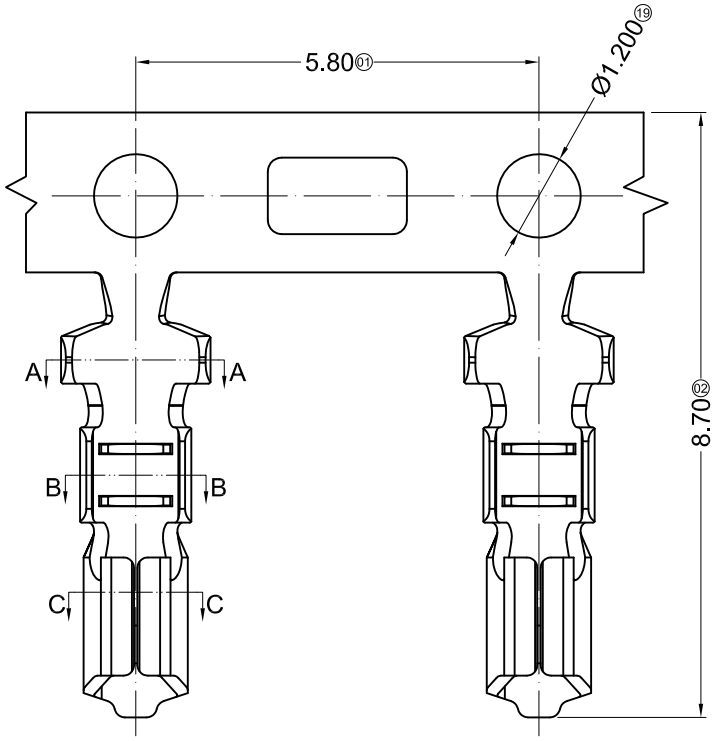

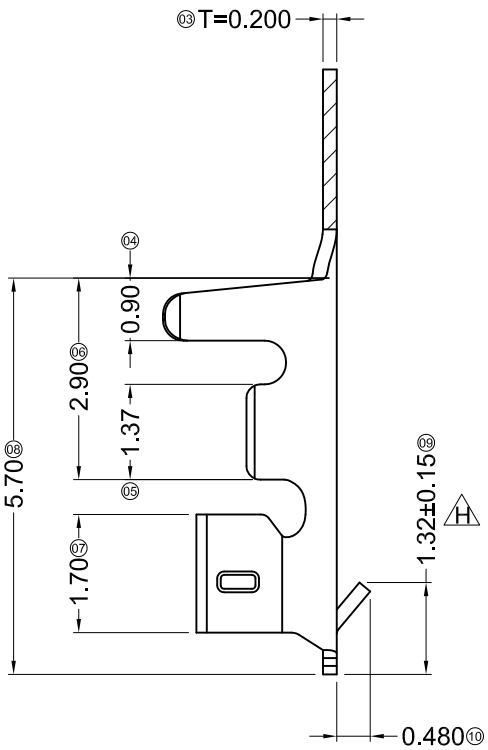

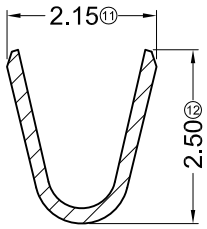

SECTION: A-A
SCALE: 1:1

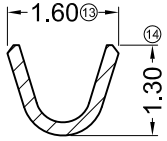

SECTION: B-B
SCALE: 1:1

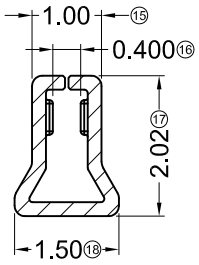

SECTION: C-C
SCALE: 1:1

■ Specifications :

- Voltage rating: 100V AC / DC
- Current rating: 2A AC / DC
- Withstanding voltage: 800V AC/minute
- Temperature range: -25°C~+85°C
- Insulation resistance:≥1000MΩ
- Contact resistance: ≤10mΩ
- After environmental testing: ≤20mΩ

X2016 T X-P XXX X - X
① ② ③ ④ ⑤ ⑥ ⑦

① Series Number
② Category: T-terminal
③ Shape: Blank-ordinary
④ Material: P-Phosphor bronze
⑤ Plating style: V01-Gold Flash ; SN-Bright tin plating
⑥ Plating method: Blank-Stamping before plating
B-Plating before stamping
⑦ Mold No./Mark/Special No.

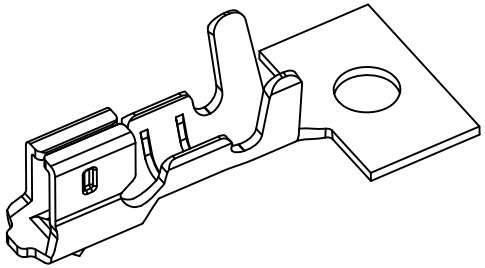

X2016T-PV01	Phosphor Bronze	AWG#24-30	1.50mm(Max)	Stamping Before plating:30u" MIN. Ni; Whole Gold :Gold Flash	X2016H
X2016T-PSNB				Plating Before Stamping:10u" MIN. Ni ; 30u"Sn	
X2016T-PSN				Stamping Before plating:30u" MIN. Ni; 70u"Sn	
XPART N0	Material	Wire Range	Insulation O.D.	Finish	Suitable XKB Terminal

For and on behalf of
XKB INDUSTRIAL PRECISION CO., LIMITED
香港星坤工業精密有限公司
Authorized Signature(s)

MARK	DESCRIPTION	DATE	REVISED	APPROVED
△ X				
△ X				
△ X				

REVISIONS

UNSPECIFIED TOLERANCES	
ANGULAR	±5°
L≤4	±0.2
4<L≤16	±0.3
16<L≤63	±0.4
L>63	±0.5

DSND		DATE		SCALE: N/A	MODEL TYPE: X2016T-PXXXX
DWN		DATE		VIEW:	PART NO.: 2.00 mm Crimp Style Connectors
CHKD		DATE		UNIT: mm	DWG NO.:
APPD		DATE		SIZE: A4	

XKB INDUSTRIAL PRECISION CO.,LIMITED

WEIGHT	SHEET	REVISION
1.0g	1/1	A0

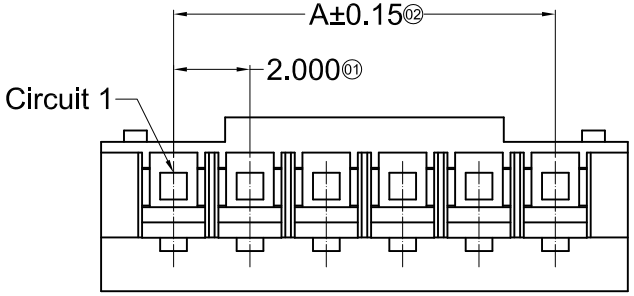

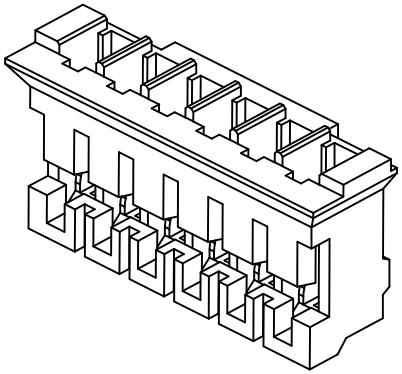

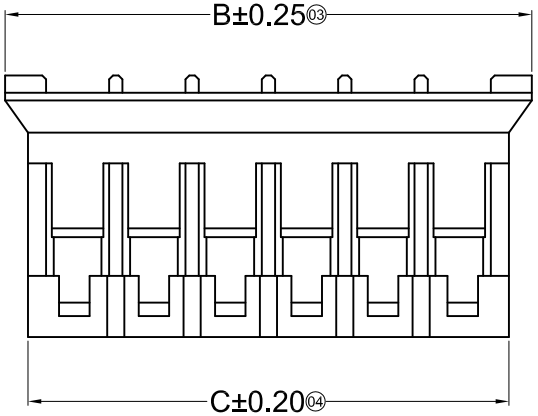

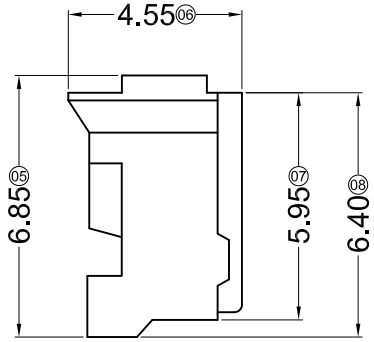

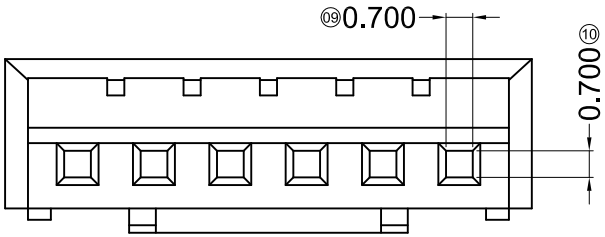

■ Specifications :

- Voltage rating: 100V AC / DC
- Current rating: 2A AC / DC
- Withstanding voltage: 800V AC/minute
- Temperature range: -25°C~+85°C
- Insulation resistance:≥1000MΩ
- Contact resistance: ≤10mΩ
- After environmental testing：≤20mΩ

X2016 H X-XX X-N0 HF-C
① ②③ ④ ⑤ ⑥ ⑦ ⑧

① Series No.
② Category：H-HSG
③ Appearance type：Blank-Ordinary
④ Row No.-Pin No.：XX-02P~20P
⑤ Plug the Pin & special No.：Blank-Ordinary
⑥ Material：N0-PA66 94V-0
⑦ HF-Halogen Free
⑧ C-Glowing Filament ;

Poles	Dimensions (mm)			Poles	Dimensions (mm)		
	A	B	C		A	B	C
02	2.00	5.80	4.60	12	22.00	25.80	24.60
03	4.00	7.80	6.60	13	24.00	27.80	26.60
04	6.00	9.80	8.60	14	26.00	29.80	28.60
05	8.00	11.80	10.60	15	28.00	31.80	30.60
06	10.00	13.80	12.60	16	30.00	33.80	32.60
07	12.00	15.80	14.60	17	32.00	35.80	34.60
08	14.00	17.80	16.60	18	34.00	37.80	36.60
09	16.00	19.80	18.60	19	36.00	39.80	38.60
10	18.00	21.80	20.60	20	38.00	41.80	40.60
11	20.00	23.80	22.60				

X2016H-XX-N0-C	Nylon 66 UL 94V-0	X2016T	X2016W
X2016H-XX-N0HF	PA66 UL 94V-0 Halogen Free		
X2016H-XX-N0	Nylon 66 UL 94V-0		
PART N0	Material	Suitable XKB Terminal	Suitable XKB Terminal

For and on behalf of
XKB INDUSTRIAL PRECISION CO., LIMITED
香港星坤工業精密有限公司
Authorized Signature(s)

MARK	DESCRIPTION	DATE	REVISED	APPROVED
△ X				
△ X				
△ X				

REVISIONS

UNSPECIFIED TOLERANCES	
ANGULAR	±5°
L≤4	±0.2
4<L≤16	±0.3
16<L≤63	±0.4
L>63	±0.5

DSND		DATE		SCALE: N/A	MODEL TYPE: X2016H-XX-N0XX
DWN		DATE		VIEW:	PART NO.: 2.00mm Crimp Style Connectors
CHKD		DATE		UNIT: mm	DWG NO.:
APPD		DATE		SIZE: A4	

XKB INDUSTRIAL PRECISION CO.,LIMITED

WEIGHT	SHEET	REVISION
1.0g	1/1	A0

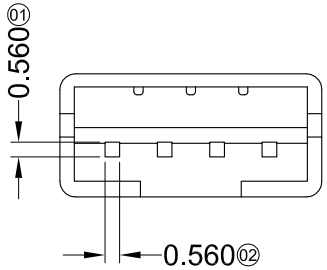

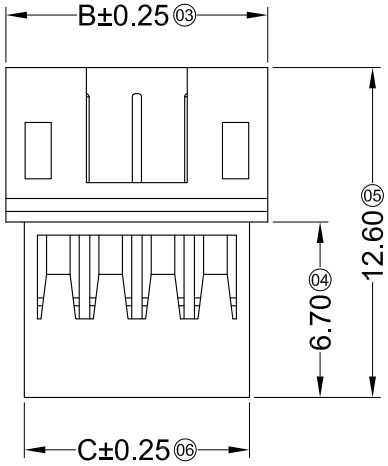

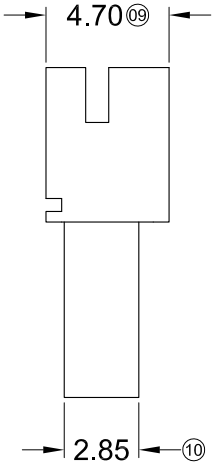

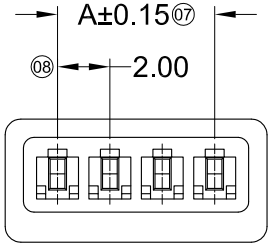

■ Specifications :

- Voltage rating: 125V AC / DC
- Current rating: 1A AC / DC
- Withstanding voltage: 250V AC/minute
- Temperature range: -25°C~+85°C
- Insulation resistance:≥100MΩ
- Contact resistance: ≤20mΩ
- After environmental testing：≤40mΩ

X2016 H F-XX X-N0 XX
① ②③ ④ ⑤ ⑥ ⑦

① Series No.
② Category：H-HSG
③ Welding Board Angle：F-Female HSG
④ Row No.-Pin No.: XX-02P~20P
⑤ Plug the Pin & special No.：
⑥ Material：N0-PA66 94V-0;
⑦ Color：Blank-natural color; BK-Black

Poles	Dimensions (mm)			Poles	Dimensions (mm)		
	A	B	C		A	B	C
02	2.00	6.00	4.60	12	22.00	26.00	24.60
03	4.00	8.00	6.60	13	24.00	28.00	26.60
04	6.00	10.00	8.60	14	26.00	30.00	28.60
05	8.00	12.00	10.60	15	28.00	32.00	30.60
06	10.00	14.00	12.60	16	30.00	34.00	32.60
07	12.00	16.00	14.60	17	32.00	36.00	34.60
08	14.00	18.00	16.60	18	34.00	38.00	36.60
09	16.00	20.00	18.60	19	36.00	40.00	38.60
10	18.00	22.00	20.60	20	38.00	42.00	40.60
11	20.00	24.00	22.60				

X2016HF-XX-N0BK	Nylon 66 UL 94V-0 Black	X2016TM	X2016W
X2016HF-XX-N0	Nylon 66 UL 94V-0		
PART N0	Material	Suitable XKB Terminal	Suitable XKB Terminal

For and on behalf of
XKB INDUSTRIAL PRECISION CO., LIMITED
香港星坤工業精密有限公司
Authorized Signature(s)

MARK	DESCRIPTION	DATE	REVISED	APPROVED
△ X				
△ X				
△ X				

REVISIONS

UNSPECIFIED TOLERANCES	
ANGULAR	±5°
L≤4	±0.2
4<L≤16	±0.3
16<L≤63	±0.4
L>63	±0.5

DSND		DATE		SCALE: N/A	MODEL TYPE: X2016HF-XX-N0XX
DWN		DATE		VIEW:	PART NO.: 2.00mm Crimp Style Connectors
CHKD		DATE		UNIT: mm	DWG NO.:
APPD		DATE		SIZE: A4	

XKB INDUSTRIAL PRECISION CO.,LIMITED

WEIGHT	SHEET	REVISION
1.0g	1/1	A0

X-ON Electronics

Largest Supplier of Electrical and Electronic Components

Click to view similar products for Headers & Wire Housings ***category:***

Click to view products by XKB ***manufacturer:***

Other Similar products are found below :

95000-104TRLF 10135584-644402LF DF62W-EP2022PCA 95000-106TRLF DF62W-2022SCA DF62W-EP2022PC 2203348 DF62W-2022SC 1084018 1029039 1084017 802-10-012-10-002000 1112640 1112639 891-007-9SS-BST1T 000-34000 0008550134 0009482033 0009507031 57102-F02-18ULF 57102-S06-03LF 57202-S52-04LF PCN6-15S-2.5E 0039019024 58102-G61-06LF 582553-1 0009485154 0009508121 0022285053 0050291907 018731A LY20-4P-DT1-P1E-BR 02.125.8002.8 60101931 60598-1 (Cut Strip) M1625-3R/100 61062-3 61082-181009 CSU011177004 636-1427 638009-1 641938-9 641991-4 644168-1 644827-2 647662-1 65039-019ELF 65692-001LF 65781-018 65781-047