REV.	ECN NO.	DESCRIPTION	DATE	DESIGN
A		变更料号	16/11/22	苏亮

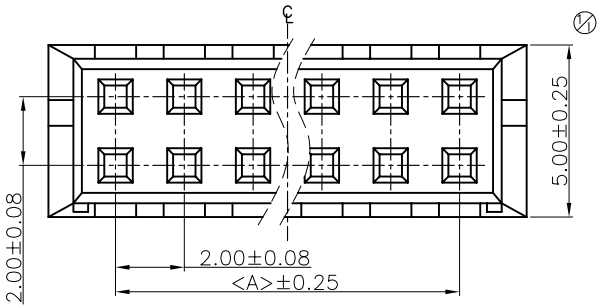

NOTES:

CURRENT RATING:3A AC/DC.
VOLTAGE RATING:250V AC/DC
TEMPERATURE RANGE:−40°C~+105°C.
CONTACT RESISTANCE:10MΩ Max.
INSULAION RESSTANCE:1000MΩ Min.
WITHSTANDING VOLTAGE: 800V AC/MINUTE.
WATRLAL:PA66.UL94V−0.

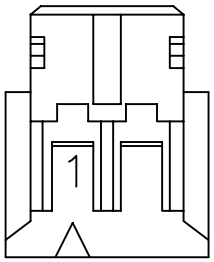

2P视图

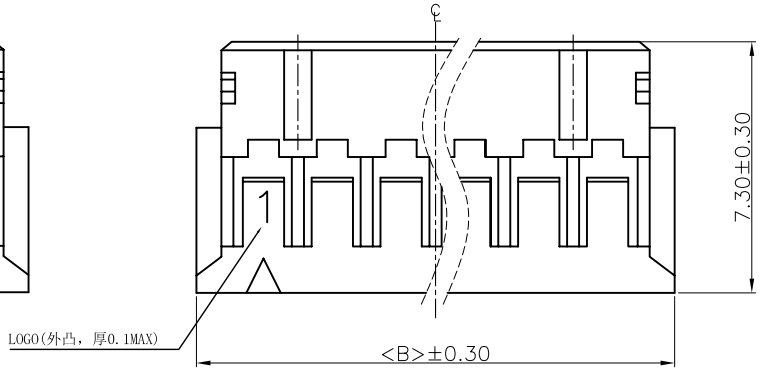

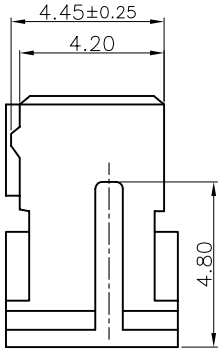

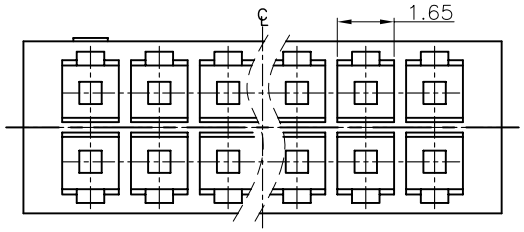

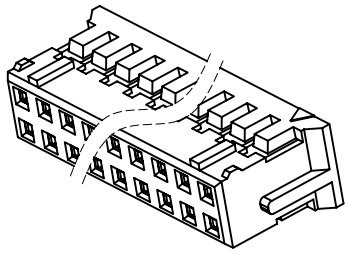

PART NO.	Dimensions	
	A	B
A2006H−2X02P	2.00	6.00
A2006H−2X03P	4.00	8.00
A2006H−2X04P	6.00	10.00
A2006H−2X05P	8.00	12.00
A2006H−2X06P	10.00	14.00
A2006H−2X07P	12.00	16.00
A2006H−2X08P	14.00	18.00
A2006H−2X09P	16.00	20.00
A2006H−2X10P	18.00	22.00
A2006H−2X11P	20.00	24.00
A2006H−2X12P	22.00	26.00
A2006H−2X13P	24.00	28.00
A2006H−2X14P	26.00	30.00
A2006H−2X15P	28.00	32.00
A2006H−2X16P	30.00	34.00
A2006H−2X17P	32.00	36.00
A2006H−2X18P	34.00	38.00
A2006H−2X19P	36.00	40.00
A2006H−2X20P	38.00	42.00

DIM	TOL	DIM	TOL
X.	/	X°.	/
X.X	0.25	X.X°	
X.XX	0.15	X.XX°	
X.XXX	0.10	X.XXX°	/

CNJM Joint More Precision electronics Co.,Ltd.

DRAW NO.		DATE	P/N NO:	DRAW NAME:
DESIGN:	陈雪峰	2017.06.03	A2006H−2XNP	2.0mm pitch housing
CHECK:	杨 烨			
REVIEW:			REV. A/1 SCALE 1:1	UNIT: mm SHEET: 1 OF 1

REV.	ECN NO.	DESCRIPTION	DATE	DESIGN
A		变更料号	16/11/22	苏亮

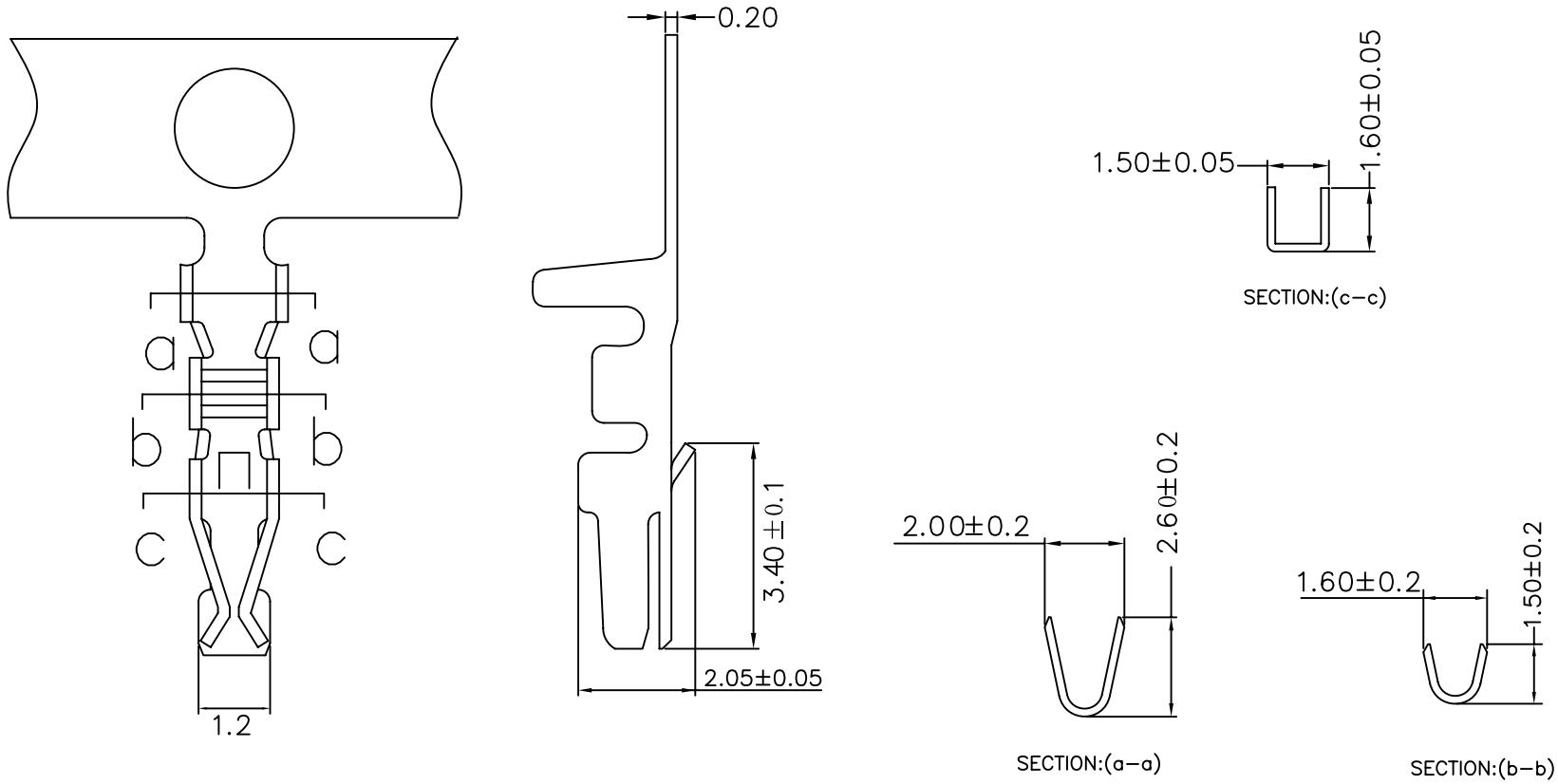

Part NO.	Wire range	Insulation O.D.	Materials	Finish	Qty/reel
A2006-TP	AWG#22-28	1.5mm(max)	Phosphor Bronze	Tin-plated	10000PCS
A2006-TPE	AWG#22-28	1.5mm(max)	Phosphor Bronze	Tin-plated	10000PCS

DIM	TOL	DIM	TOL
X.	/	X°.	/
X.X	0.25	X.X°	
X.XX	0.15	X.XX°	
X.XXX	0.10	X.XXX°	/

CNJM Joint More Precision electronics Co.,Ltd.

DRAW NO.		DATE	P/N NO:	DRAW NAME:
DESIGN:	陈雪峰	2017.06.03	A2006-XXX	2.0mm pitch Terminal
CHECK:	杨 烨			
REVIEW:			REV. A/1 SCALE 1:1	UNIT: mm SHEET: 1 OF 1

REV.	ECN NO.	DESCRIPTION	DATE	DESIGN
A		变更料号	17/06/08	苏亮

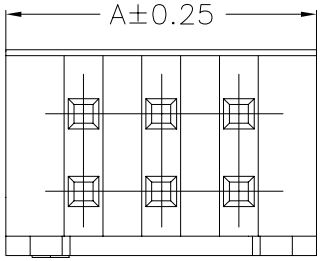

SPECIFICATIONS

1) Voltange rating:250V AC,DC.
2) Current rating:3A AC,DC.
3) Withstanding voltage:800V AC/minute.
4) Insulation resistance:1,000M Omega min.
5) Temperature range:-40°~+105°.
6) Contact resistance:Initial value/10m omega max,after environmental testg /20m omega max.

WAFER

1) Part No.:A2006WV-2XNP
2) Poles:4-40
3) Material:Contact:Brass,Tin plated
   Base:PA9T UL94v-0
4) Qty:1000pcs/bag

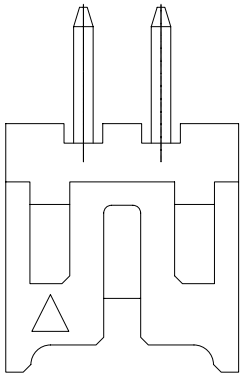

2P视图

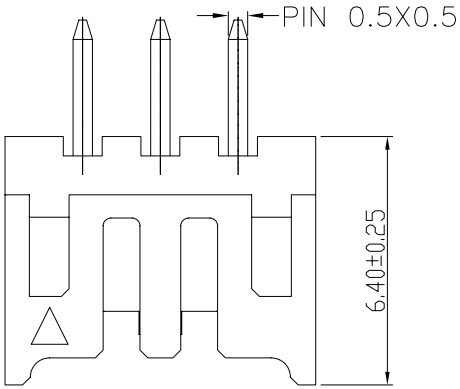

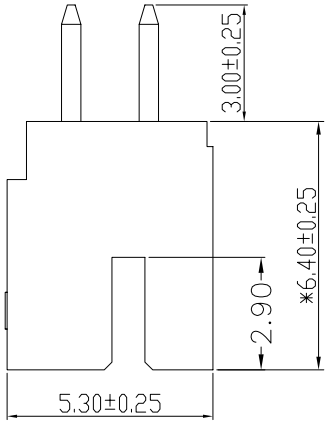

PART NO.	Dimensions	
	A	B
A2006WV-2X02P	6.00	2.00
A2006WV-2X03P	8.00	4.00
A2006WV-2X04P	10.00	6.00
A2006WV-2X05P	12.00	8.00
A2006WV-2X06P	14.00	10.00
A2006WV-2X07P	16.00	12.00
A2006WV-2X08P	18.00	14.00
A2006WV-2X09P	20.00	16.00
A2006WV-2X10P	22.00	18.00
A2006WV-2X11P	24.00	20.00
A2006WV-2X12P	26.00	22.00
A2006WV-2X13P	28.00	24.00
A2006WV-2X14P	30.00	26.00
A2006WV-2X15P	32.00	28.00
A2006WV-2X16P	34.00	30.00
A2006WV-2X17P	36.00	32.00
A2006WV-2X18P	38.00	34.00
A2006WV-2X19P	40.00	36.00
A2006WV-2X20P	42.00	38.00

Recommended P.C.B Layout(Top Side)
P.C.B Thickness = 1.00~1.60mm
(Tolerance=±0.05)

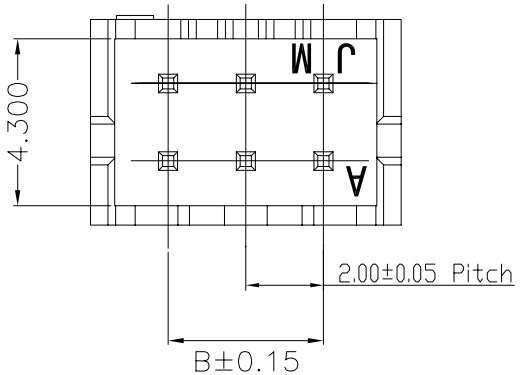

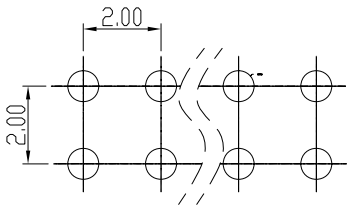

PCB Layout

DIM	TOL	DIM	TOL
X.	/	X°.	/
X.X	0.25	X.X°	
X.XX	0.15	X.XX°	
X.XXX	0.10	X.XXX°	/

CNJM Joint More Precision electronics Co.,Ltd.

DRAW NO.		DATE	P/N NO:		DRAW NAME:	
DESIGN:	陈雪峰	2017.06.03	A2006WV-2XNP-9T		2.0mm pitch wafer 9T专用	
CHECK:	杨 烨					
REVIEW:			REV.A/1	SCALE 1:1	UNIT: mm	SHEET: 1 OF 1

REV.	ECN NO.	DESCRIPTION	DATE	DESIGN
A		变更料号	17/6/8	苏亮
		1 增加尺寸	17/7/17	苏亮

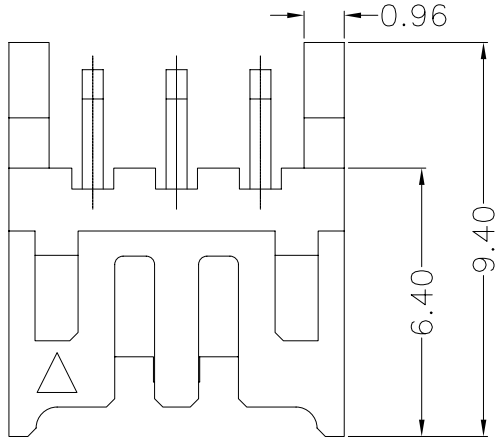

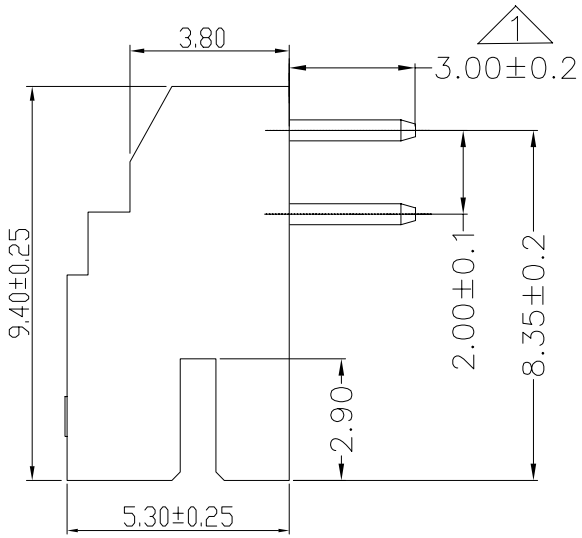

SPECIFICATIONS

1) Voltange rating:250V AC,DC.
2) Current rating:3A AC,DC.
3) Withstanding voltage:800V AC/minute.
4) Insulation resistance:1,000M Omega min.
5) Temperature range:-40°~+105°.
6) Contact resistance:Initial value/10m omega max,after environmental testg /20m omega max.

WAFER

1) Part No.:A2006WR-2XNP
2) Poles:4-40
3) Material:Contact:Brass,Tin plated
   Base:PA9T UL94v-0
4) Qty:1000pcs/bag

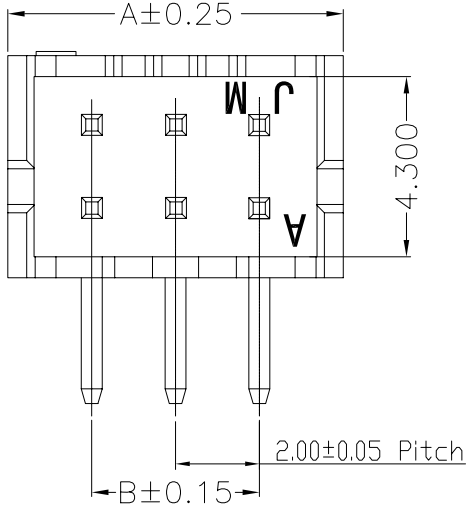

Recommended P.C.B Layout(Top Side)
P.C.B Thickness = 1.00~1.60mm
(Tolerance=i à0.05)

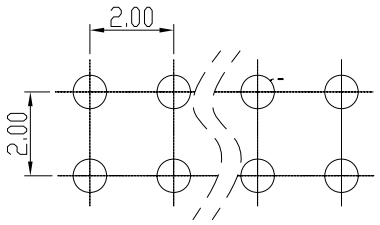

PCB Layout

PART NO.	Dimensions	
	A	B
A2006WR-2X02P	6.00	2.00
A2006WR-2X03P	8.00	4.00
A2006WR-2X04P	10.00	6.00
A2006WR-2X05P	12.00	8.00
A2006WR-2X06P	14.00	10.00
A2006WR-2X07P	16.00	12.00
A2006WR-2X08P	18.00	14.00
A2006WR-2X09P	20.00	16.00
A2006WR-2X10P	22.00	18.00
A2006WR-2X11P	24.00	20.00
A2006WR-2X12P	26.00	22.00
A2006WR-2X13P	28.00	24.00
A2006WR-2X14P	30.00	26.00
A2006WR-2X15P	32.00	28.00
A2006WR-2X16P	34.00	30.00
A2006WR-2X17P	36.00	32.00
A2006WR-2X18P	38.00	34.00
A2006WR-2X19P	40.00	36.00
A2006WR-2X20P	42.00	38.00

CNJM Joint More Precision electronics Co.,Ltd.

DIM	TOL	DIM	TOL
X.	/	X°.	/
X.X	0.25	X.X°	
X.XX	0.15	X.XX°	
X.XXX	0.10	X.XXX°	/

DRAW NO.		DATE	P/N NO:	DRAW NAME:
DESIGN:	陈雪峰	2017.06.03	A2006WR-2XNP-9T	2.0mm pitch wafer 9T专用
CHECK:	杨 烨			
REVIEW:			REV.A/1 SCALE 1:1	UNIT: mm SHEET: 1 OF 1

REV.	ECN NO.	DESCRIPTION	DATE	DESIGN
A				

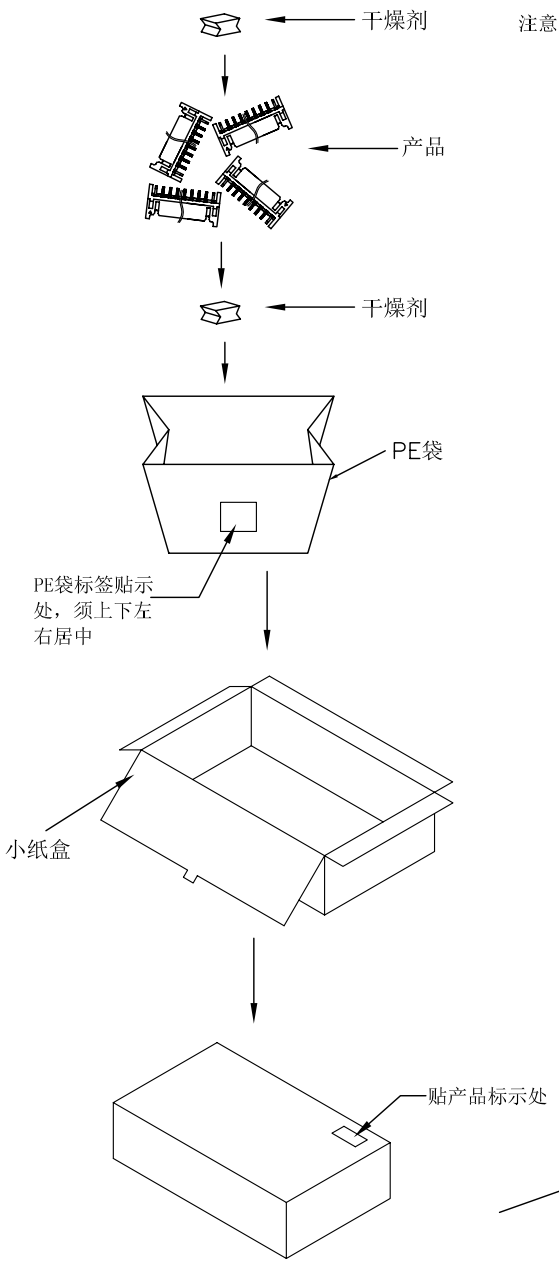

注意:

1. 将产品轻轻放入PE袋并在PE袋底部和口部各放一包干燥剂,不能将产品端子或PIN针弄变形，最后将PE袋密封好后在PE袋外贴1PCS产品标签.
2. 将封好的PE袋装入小纸盒内并扣上小纸盒盖子，每个小纸盒内只放一袋产品.（小纸盒外右上角需贴1PCS产品标示）
3. 将装好产品的小纸盒平放入纸箱内，每层平放3盒，每箱放3层，共计9盒，封好纸箱并在侧面右上角贴1PCS出货标签。
4. 每PE袋放入产品的数量及整箱的数量,不能多放或少放.
   PE 袋 规 格：详见包装列表(PE袋规格为无孔)
   小纸盒规格：25*15*7CM
   纸 箱 规 格：18.5*10.5*11英寸

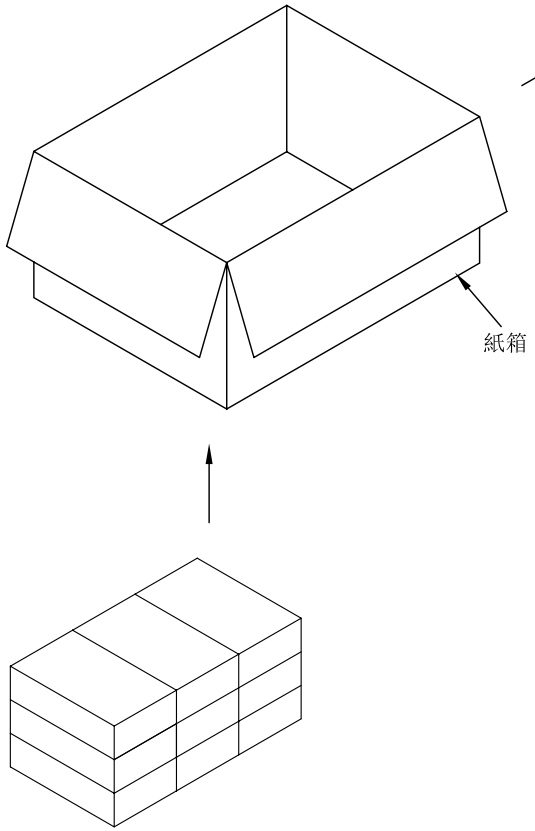

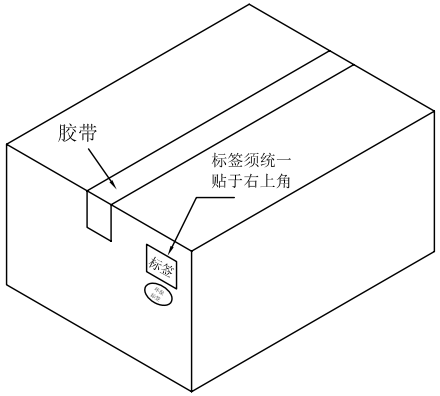

产品料号	PE袋规格	PE袋包装数量 PCS/袋	纸箱包装数量 PCS/箱
A2006WR-2X02P	18*24cm	1000	9000
A2006WR-2X03P	18*24cm	1000	9000
A2006WR-2X04P	18*24cm	1000	9000
A2006WR-2X05P	21*26cm	1000	4500
A2006WR-2X06P	18*24cm	500	4500
A2006WR-2X07P	18*24cm	500	4500
A2006WR-2X08P	21*26cm	500	4500
A2006WR-2X09P	21*26cm	500	4500
A2006WR-2X10P	21*26cm	500	4500
A2006WR-2X11P	21*26cm	500	4500
A2006WR-2X12P	21*26cm	400	3600
A2006WR-2X13P	21*26cm	400	3600
A2006WR-2X14P	21*26cm	300	2700
A2006WR-2X15P	21*26cm	300	2700
A2006WR-2X16P	21*26cm	200	1800
A2006WR-2X17P	21*26cm	200	1800
A2006WR-2X18P	21*26cm	200	1350
A2006WR-2X19P	21*26cm	150	1350
A2006WR-2X20P	21*26cm	150	1350

DIM	TOL	DIM	TOL
X.	/	X°.	/
X.X	0.25	X.X°	
X.XX	0.15	X.XX°	
X.XXX	0.10	X.XXX°	/

CNJM Joint More Precision electronics Co.,Ltd.

DRAW NO.		DATE	P/N NO:	DRAW NAME:
DESIGN:	陈雪峰	2017.2.9		PHD2.0 90° Wafer 系列盒装包装规范
CHECK:	杨 烨			
REVIEW:			REV. A/1 SCALE 1:1	UNIT: mm SHEET: 1 OF 1

REV.	ECN NO.	DESCRIPTION	DATE	DESIGN
A				

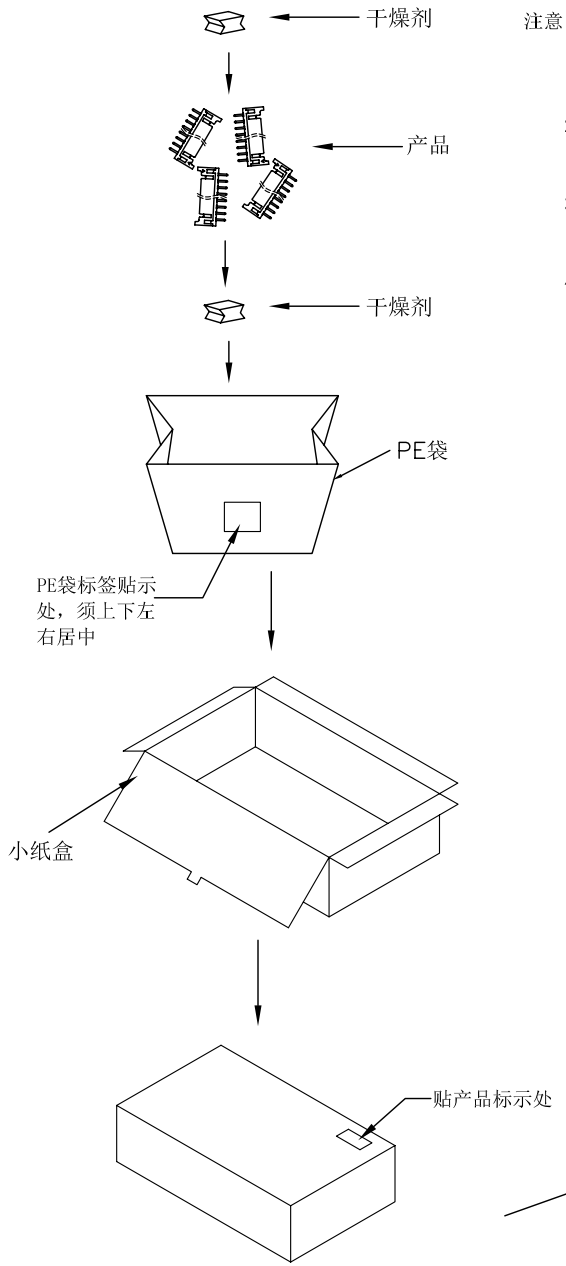

注意：

1. 将产品轻轻放入PE袋并在PE袋底部和口部各放一包干燥剂,不能将产品端子或PIN针弄变形，最后将PE袋密封好后在PE袋外贴1PCS产品标签.
2. 将封好的PE袋装入小纸盒内并扣上小纸盒盖子，每个小纸盒内只放一袋产品.（小纸盒外右上角需贴1 PCS产品标示）
3. 将装好产品的小纸盒平放入纸箱内，每层平放3盒，每箱放3层，共计9盒，封好纸箱并在侧面右上角贴1PCS出货标签。
4. 每PE袋放入产品的数量及整箱的数量,不能多放或少放.
   PE 袋 规 格：详见包装列表(PE袋规格为无孔)
   小纸盒规格：25*15*7CM
   纸 箱 规 格：18.5*10.5*11英寸

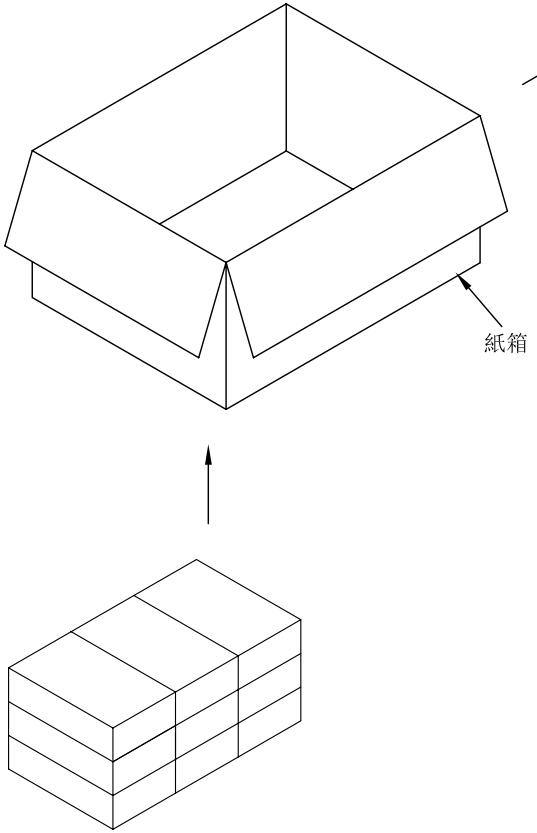

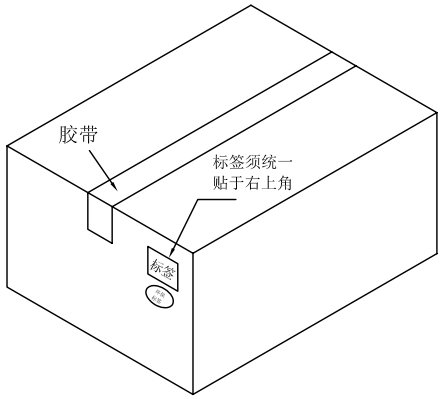

产品料号	PE袋规格	PE袋包装数量 PCS/袋	纸箱包装数量 PCS/箱
A2006WV-2X02P	18*24cm	1000	9000
A2006WV-2X03P	18*24cm	1000	9000
A2006WV-2X04P	18*24cm	1000	9000
A2006WV-2X05P	21*26cm	1000	9000
A2006WV-2X06P	18*24cm	1000	9000
A2006WV-2X07P	18*24cm	1000	9000
A2006WV-2X08P	21*26cm	1000	9000
A2006WV-2X09P	21*26cm	500	4500
A2006WV-2X10P	21*26cm	500	4500
A2006WV-2X11P	21*26cm	500	4500
A2006WV-2X12P	21*26cm	500	4500
A2006WV-2X13P	21*26cm	500	4500
A2006WV-2X14P	21*26cm	500	4500
A2006WV-2X15P	21*26cm	500	4500
A2006WV-2X16P	21*26cm	400	3600
A2006WV-2X17P	21*26cm	400	3600
A2006WV-2X18P	21*26cm	400	3600
A2006WV-2X19P	21*26cm	200	1800
A2006WV-2X20P	21*26cm	200	1800

DIM	TOL	DIM	TOL
X.	/	X°.	/
X.X	0.25	X.X°	
X.XX	0.15	X.XX°	
X.XXX	0.10	X.XXX°	/

CNJM Joint More Precision electronics Co.,Ltd.

DRAW NO.		DATE	P/N NO:	DRAW NAME: PHD2.0 180° Wafer 系列盒装包装规范	
DESIGN:	陈雪峰	2017.06.03			
CHECK:	杨 烨				
REVIEW:			REV. A / SCALE 1:1	UNIT: mm	SHEET: 1 OF 1

X-ON Electronics

Largest Supplier of Electrical and Electronic Components

Click to view similar products for Headers & Wire Housings ***category:***

Click to view products by CNJM ***manufacturer:***

Other Similar products are found below :

95000-104TRLF 10135584-644402LF DF62W-EP2022PCA 95000-106TRLF DF62W-2022SCA DF62W-EP2022PC 2203348 DF62W-2022SC 1084018 1029039 1084017 802-10-012-10-002000 1112640 1112639 891-007-9SS-BST1T 000-34000 0008550134 0009482033 0009507031 57102-F02-18ULF 57102-S06-03LF 57202-S52-04LF PCN6-15S-2.5E 0039019024 58102-G61-06LF 582553-1 0009485154 0009508121 0022285053 0050291907 018731A LY20-4P-DT1-P1E-BR 02.125.8002.8 60101931 60598-1 (Cut Strip) M1625-3R/100 61062-3 61082-181009 CSU011177004 636-1427 638009-1 641938-9 641991-4 644168-1 644827-2 647662-1 65039-019ELF 65692-001LF 65781-018 65781-047